SAGIPARTS.COM

1994-96

JEEP

PARTS CATALOG

ILLUSTRATIONS AND TEXT
BODY – CHASSIS – TRIM

WRANGLER – CHEROKEE – GRAND CHEROKEE

81-690-1917
SUPERSEDES
81-690-1873

SAGIPARTS

GROUP-2
FRONT SUSPENSION

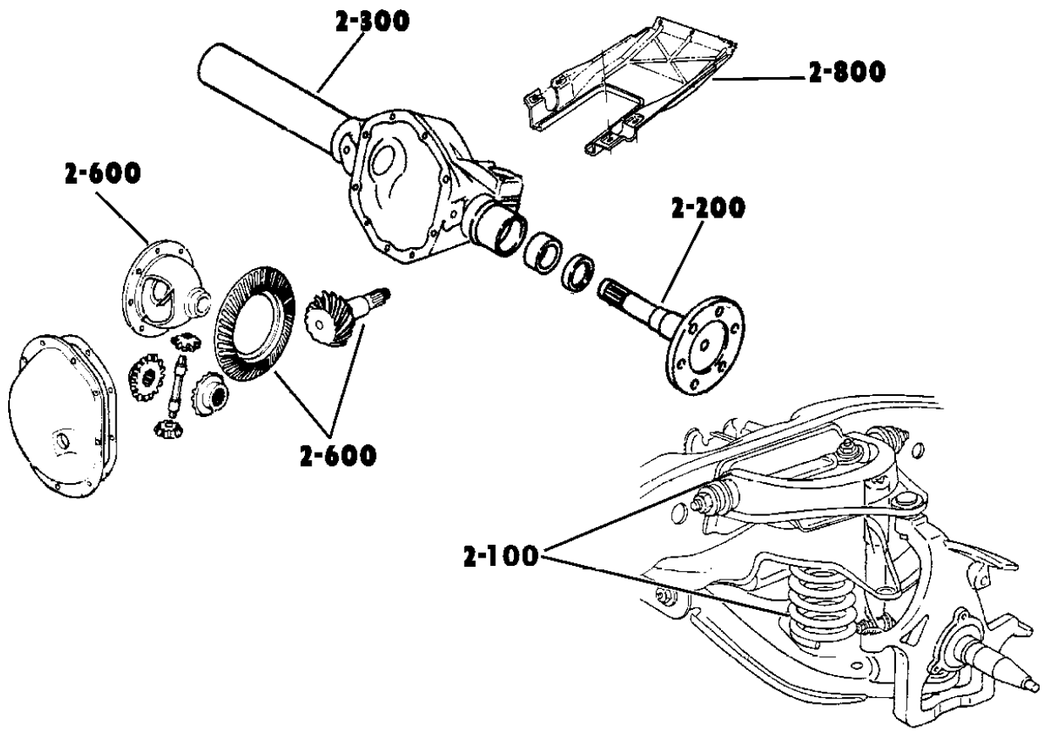

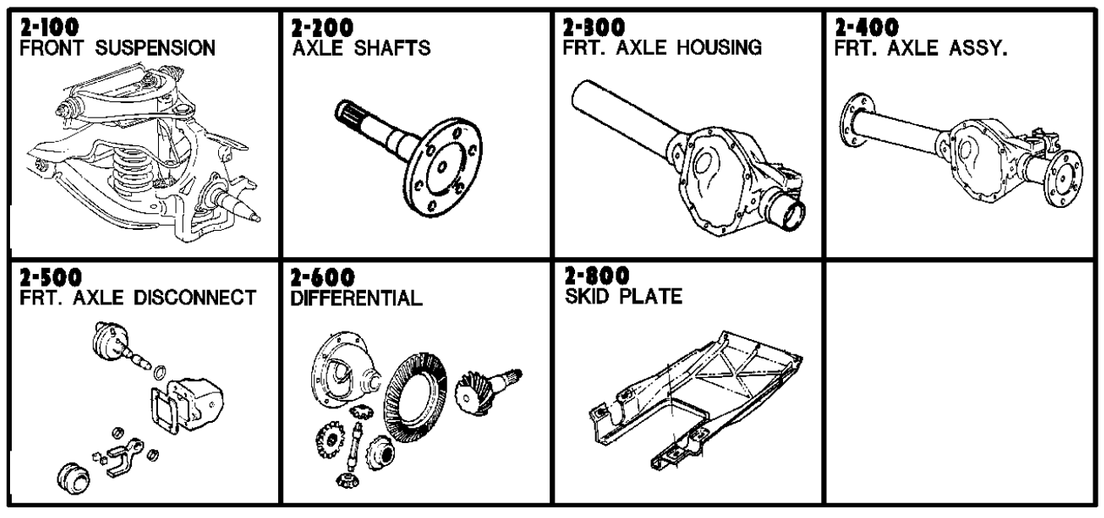

GROUP 2 - FRONT SUSPENSION & DRIVE

ILLUSTRATION TITLE — **GROUP-FIG. NO.**

FRONT SUSPENSION
BAR, FRONT STABILIZER WRANGLER, (YJ) . . . . . Fig. 2-110
FRONT SPRING AND SHOCK ABSORBER WRANGLER, (YJ) . . . . . Fig. 2-120
BAR, FRONT STABILIZER CHEROKEE . . . . . Fig. 2-130
BAR, FRONT STABILIZER GRAND CHEROKEE (ZJ) . . . . . Fig. 2-135
FRONT SPRING AND SHOCK ABSORBER CHEROKEE . . . . . Fig. 2-140
SUSPENSION ARMS, FRONT CHEROKEE . . . . . Fig. 2-150
SUSPENSION, FRONT SPRING WITH CONTROL ARMS AND TRACK BAR GRAND CHEROKEE (ZJ) . . . . Fig. 2-160

FRONT AXLE SHAFT
SHAFTS, FRONT AXLE W/DISCONNECT WRANGLER, (YJ) . . . . . Fig. 2-210
SHAFTS, FRONT AXLE - KDX W/O DISCONNECT WRANGLER, (Y1) . . . . . Fig. 2-220
SHAFTS, FRONT AXLE W/O DISCONNECT CHEROKEE, GRAND CHEROKEE (ZJ) . . . . . Fig. 2-230

FRONT AXLE HOUSING
10 W/DISCONNECT WRANGLER, (YJ) . . . . . Fig. 2-310
HOUSING, FRONT AXLE - KDX W/O DISCONNECT WRANGLER, (Y1) . . . . . Fig. 2-320
HOUSING, FRONT AXLE 4 WHEEL DRIVE W/O DISCONNECT CHEROKEE, GRAND CHEROKEE (ZJ) . . . Fig. 2-330
HOUSING, FRONT AXLE 2 WHEEL DRIVE CHEROKEE, GRAND CHEROKEE (ZJ) . . . . . Fig. 2-340

FRONT AXLES
AXLE ASSEMBLY, FRONT WRANGLER, (YJ) . . . . . Fig. 2-410
AXLE ASSEMBLY, FRONT 4 WHEEL DRIVE CHEROKEE, GRAND CHEROKEE (ZJ) . . . . . Fig. 2-420

FRONT AXLE DIFFERENTIAL
DIFFERENTIAL, FRONT AXLE WRANGLER, (YJ) . . . . . Fig. 2-610
DIFFERENTIAL, FRONT AXLE CHEROKEE, GRAND CHEROKEE (ZJ) . . . . . Fig. 2-620

FRONT AXLE SKID PLATES
SKID PLATE, FRONT AXLE CHEROKEE . . . . . Fig. 2-810

BAR, FRONT STABILIZER WRANGLER, (YJ)
Figure 2-110

2-110

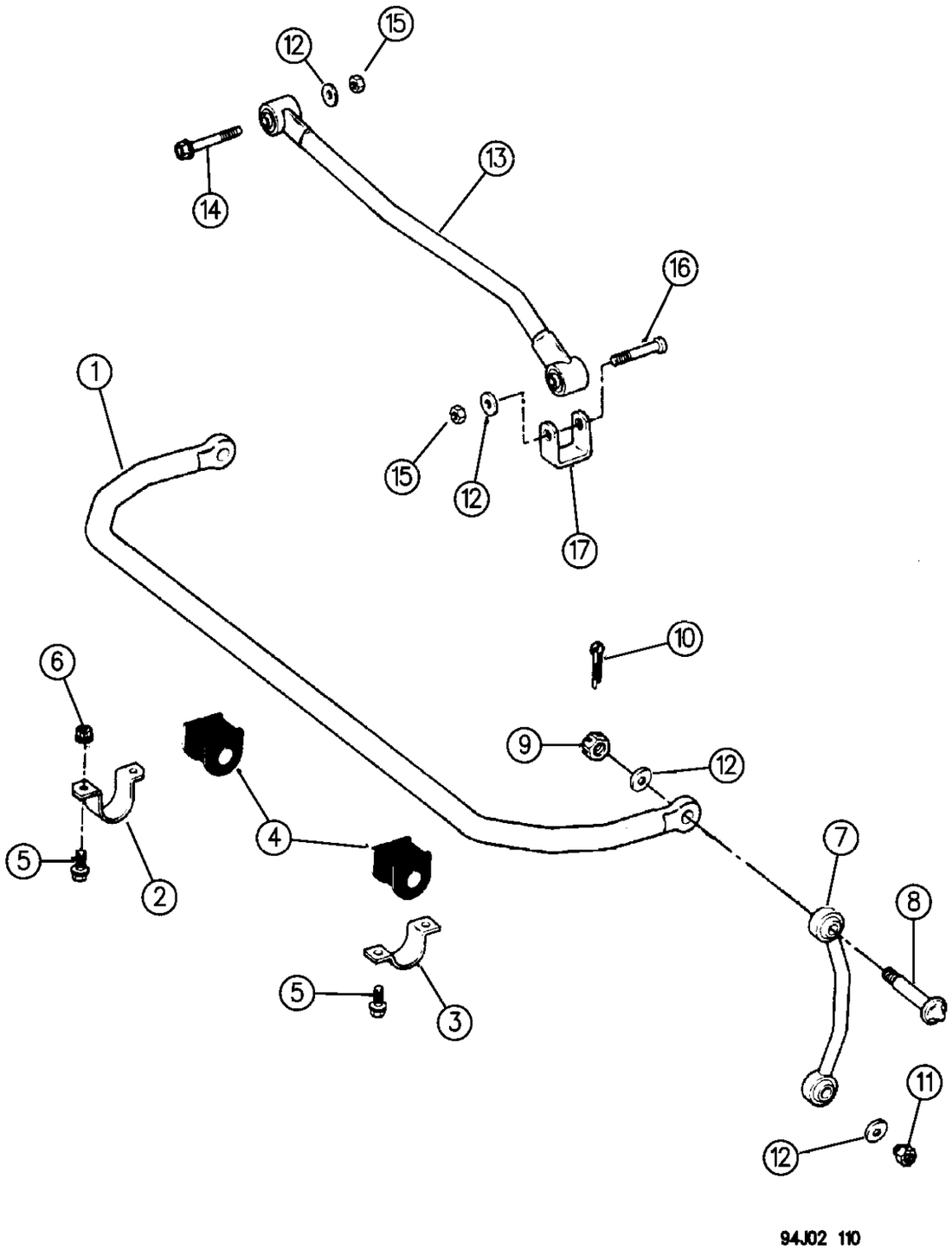

ITEM	PART NUMBER	QTY	BODY	MODEL	DESCRIPTION
1	5200 3142	1			BAR, Stabilizer
2	5200 1085	1			CLAMP
3	5204 0047	1			CLAMP
4	5200 3143	2			CUSHION
5	J812 4191	4			BOLT
6	J400 5142	2			NUT
7	5200 2609	2			LINK
8	J535 2787	2			PIN
9	J027 4428	2			NUT
10	S011 9120	2			PIN, Cotter
11	J400 4311	2			NUT
12	S012 0390	10			WASHER
13	5204 0403	1			BAR, Track
14	3420 2415	1			BOLT
15	1150 2723	4			NUT
16	6502 248	3			BOLT
17					SPACER
	5200 1989	2			1994
	5208 7976	2			1995

MODEL CODES:

72=2 DR Wagon
74=4 DR Wagon
77=Open Body 93" Whlbase
78=Open Body 103" Whlbase - Export
T=2WD
J,N=4WD
U=4WD (RHD)

BODY STYLES:

YJ=Wrangler (4X4) "S"
Weangler (4X4) SE
Wrangler (4X4) Sahara
Wrangler (4X4) Renegade

XJ=Cherokee SE
Cherokee Sport
Cherokee Country

ZJ=Grand Cherokee SE
Grand Cherokee Laredo
Grand Cherolee Limited
ZG=Grand Cherokee European

Y1=Wrangler
X1=Cherokee
Z1=Grand Cherokee
KDX=Vehicles

AR = Use as Required - = Non Illustrated Part P.A.R. = Paint as Required

« RETURN TO GROUP INDEX

FRONT SPRING AND SHOCK ABSORBER WRANGLER, (YJ)
Figure 2-120

2-120A

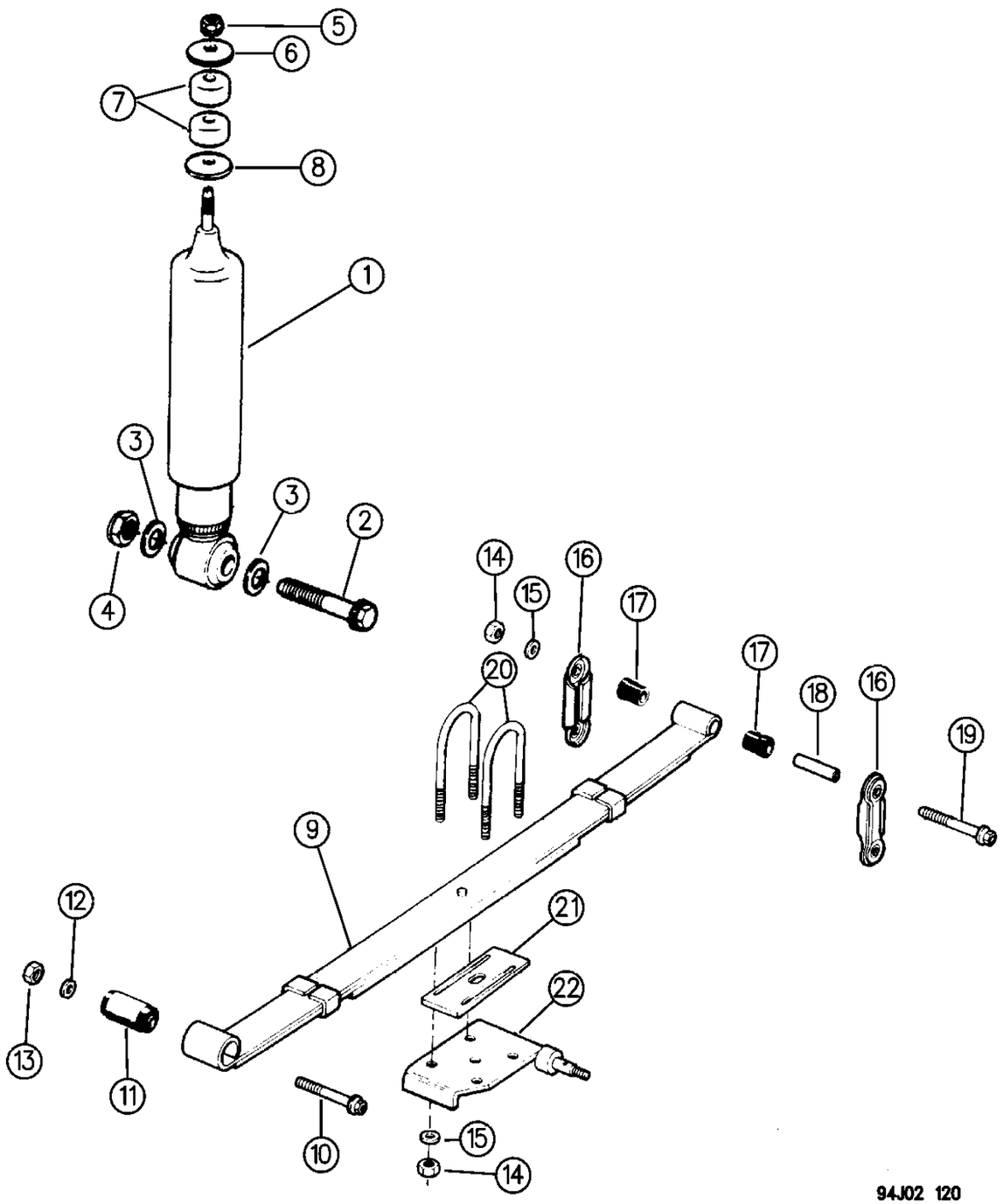

ITEM	PART NUMBER	QTY	BODY	MODEL	DESCRIPTION
1					SHOCK ABSORBER
	8350 2866	2			w/Std. Duty, (SFA or SDA)(Stamped 52500034)
	4638 208	2			w/Special Sport Susp. (SFE) (Stamped 52003993) EGYPT
	8350 2836	2			w/H.D., (SFB or SDU)(Stamped 52002610)
2	J018 1709	2			BOLT
3	S012 0390	4			WASHER
4	J400 4311	2			NUT
5	J012 0369	2			NUT
6	J316 5076	2			RETAINER
7	J321 6638	4			GROMMET
8	J314 6809	2			RETAINER
9					SPRING, Front
	5200 3207	2			w/2.5L Eng.
	4636 975	2			w/4.0L Eng.
10	J400 7547	2			BOLT
11	5200 2551	2			BUSHING
12	J400 6884	2			WASHER
13	J400 3979	2			NUT
14	J400 4311	12			NUT
15	S012 0390	12			WASHER
16	5204 0415	4			PLATE
17	5200 2552	8			BUSHING
18	5200 2553	4			SPACER
19	J400 7393	4			BOLT
20					U-BOLT ***
	J813 0369	4			Width = 3.06"
	J813 0370	4			Width = 3.75"
21	5200 3408	2			SHIM
22					PLATE ***
	5204 0407	1			Lt.
	5204 0348	1			Rt.

MODEL CODES:

72=2 DR Wagon
74=4 DR Wagon
77=Open Body 93" Whlbase
78=Open Body 103" Whlbase - Export
T=2WD
J,N=4WD
U=4WD (RHD)

BODY STYLES:

YJ=Wrangler (4X4) "S"
Weangler (4X4) SE
Wrangler (4X4) Sahara
Wrangler (4X4) Renegade
XJ=Cherokee SE
Cherokee Sport
Cherokee Country
ZJ=Grand Cherokee SE
Grand Cherokee Laredo
Grand Cherolee Limited
ZG=Grand Cherokee European
Y1=Wrangler
X1=Cherokee
Z1=Grand Cherokee
KDX=Vehicles

AR = Use as Required - = Non Illustrated Part P.A.R. = Paint as Required

« RETURN TO GROUP INDEX

BAR, FRONT STABILIZER CHEROKEE
Figure 2-130

2-130

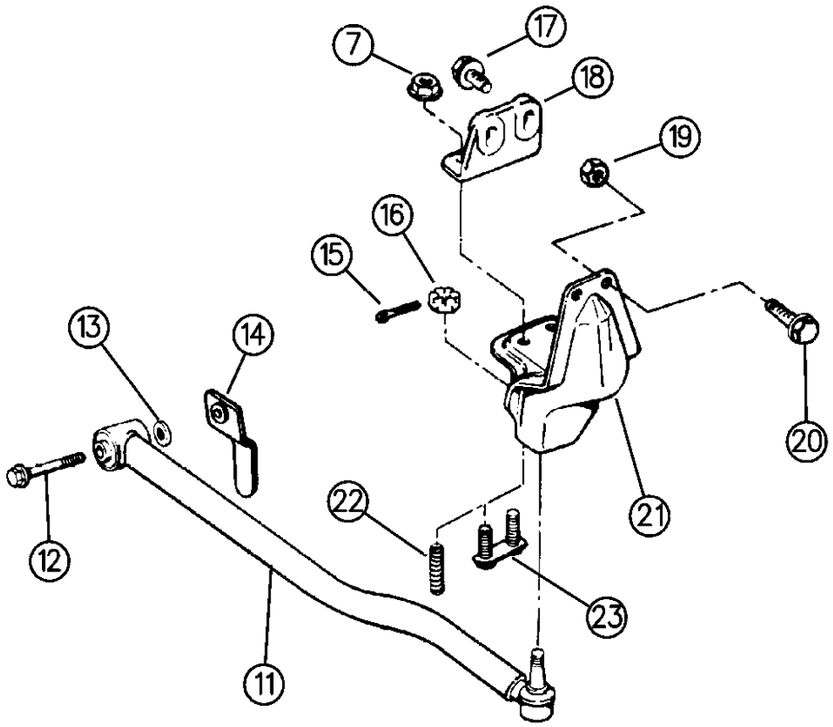

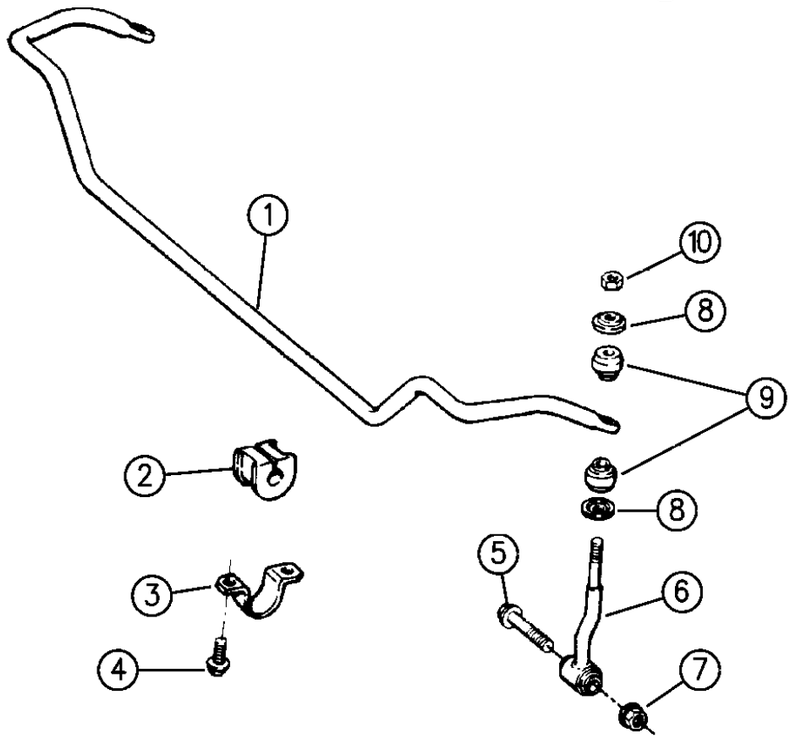

94J02 130

ITEM	PART NUMBER	QTY	BODY	MODEL	DESCRIPTION
1	5208 7859	1			BAR, Stabilizer
2	5200 3232	2			CUSHION, Stabilizer
3	5200 5654	2			CLAMP
4	3420 1321	4			BOLT
5	6503 032	2			BOLT
6	5203 7849	2			LINK
7	1150 2813	AR			NUT
8	5208 7668	4			RETAINER
9	5200 1132	4			GROMMET
10	1150 0424	2			NUT
11					BAR, Track
	5200 7118	1			w/LHD
	5200 6509	1			w/RHD
12	3420 2640	1			BOLT
13	S243 6163	1			WASHER
14					RETAINER
	3420 2463	1			w/LHD
	6502 509	1			w/RHD
15	1101 0069	1			PIN
16	J027 4428	1			NUT
17	3420 1869	2			BOLT, w/Diesel Eng.
18					REINFORCEMENT
	5200 1275	1			w/LHD 1994 w/Diesel
	5208 7861	1			w/LHD 1995-96 w/Diesel
	5203 7507	1			w/RHD, w/All Engines
19					NUT
	1150 1033	2			M10
	1150 2813	2			M12
20	1150 2606	2			BOLT, M10x1.5
21					BRACKET, Track Bar
	5200 7121	1			w/LHD
	5200 6508	1			w/RHD
22	3420 1964	2			BOLT, M12x1.75x40.00
23	5200 1493	1			PLATE, Track Bar

MODEL CODES:

72=2 DR Wagon
74=4 DR Wagon
77=Open Body 93" Whlbase
78=Open Body 103" Whlbase - Export
T=2WD
J,N=4WD
U=4WD (RHD)

BODY STYLES:

YJ=Wrangler (4X4) "S"
Weangler (4X4) SE
Wrangler (4X4) Sahara
Wrangler (4X4) Renegade
XJ=Cherokee SE
Cherokee Sport
Cherokee Country
ZJ=Grand Cherokee SE
Grand Cherokee Laredo
Grand Cherolee Limited
ZG=Grand Cherokee European
Y1=Wrangler
X1=Cherokee
Z1=Grand Cherokee
KDX=Vehicles

AR = Use as Required - = Non Illustrated Part P.A.R. = Paint as Required

BAR, FRONT STABILIZER GRAND CHEROKEE (ZJ)
Figure 2-135

2-135

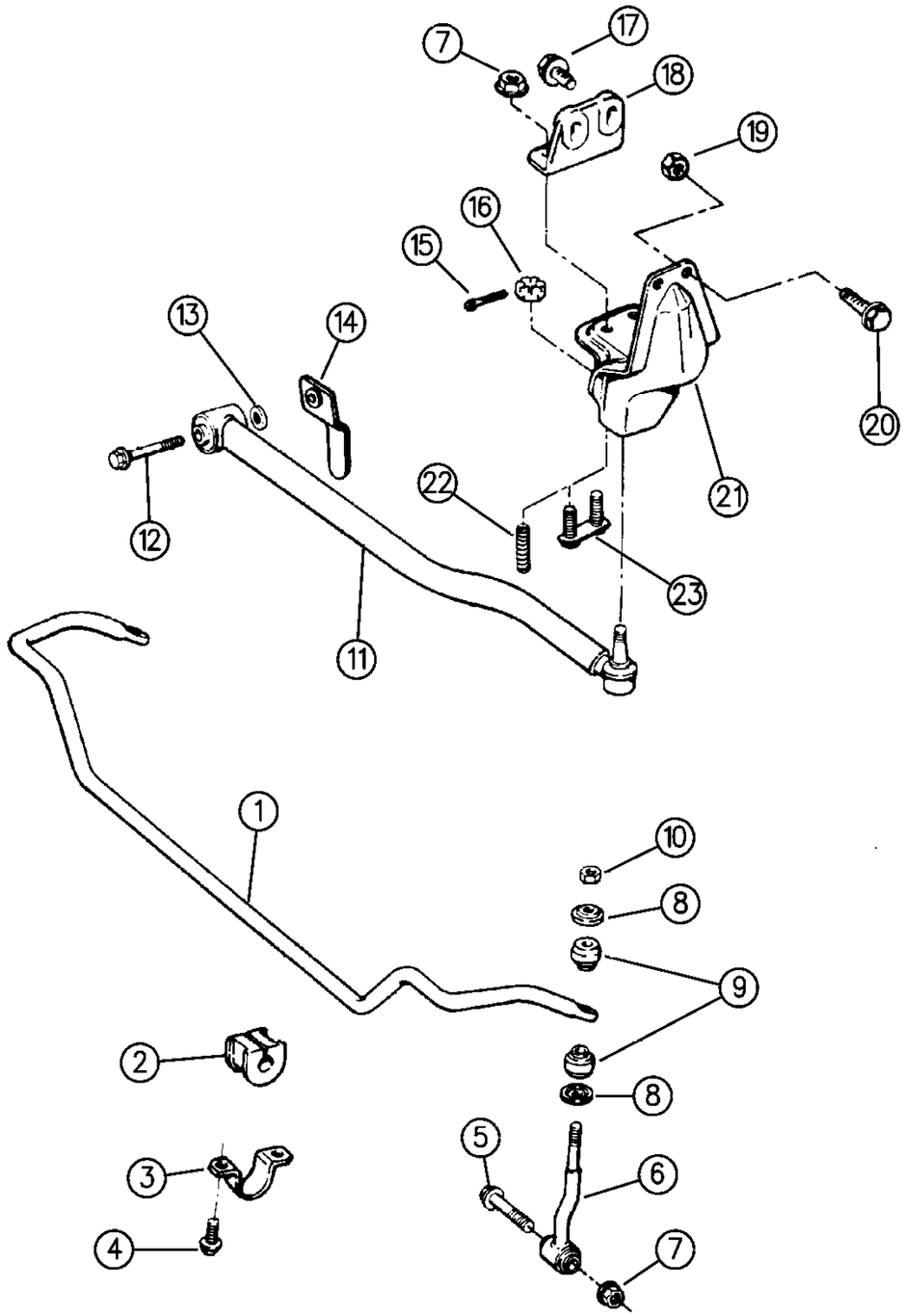

94J02 135

ITEM	PART NUMBER	QTY	BODY	MODEL	DESCRIPTION
1					BAR, Stabilizer
	5200 5233	1	ZJ		1994-95
	5208 8100	1	ZJ		1996
	5208 8423	1	ZG		w/LHD
	5305 4170	1	ZG		w/RHD
2					CUSHION, Stabilizer
	5200 5653	2	ZJ		1994
	5208 8094	2	ZJ		1995-96
	5208 8381	2	ZG		1996
3	5200 5654	2			CLAMP
4					BOLT
	6502 467	2			Rt.
	6502 792	2			Lt.
5	6502 930	2			BOLT
6					LINK
	5203 7849	2			1994-95
	5208 7846	2			1996
7	6502 697	2			NUT
8	5208 7668	4			RETAINER
9	5200 1132	4			GROMMET
10	6101 687	2			NUT
11	5200 7118	1			BAR, Track
12	6504 416	1			BOLT, M10x1.75x70
13	S243 6163	1			WASHER
14	3420 2463	1			RETAINER
15	1101 0069	1			PIN
16	J027 4428	1			NUT
17	3420 1869	2			BOLT, w/Diesel Eng.
18					REINFORCEMENT, w/Diesel Eng.
	5200 1275	1			1994
	5208 7861	1			1995-96
19	1150 1033	2			NUT, M10
	1150 2813	2			M12
20					BOLT
	1150 2606	2			w/4.0L Eng. M10x1.5 ***
-	5200 1493	2			PLATE, w/2.5, 5.2L Eng.
21	5200 7121	1			BRACKET, Track Bar
	5200 6508	1			w/RHD
22	3420 2742	2			STUD, w/o 2.5L Eng.
23	5200 1493	1			PLATE, Track Bar, w/2.5L Eng.

MODEL CODES:

72=2 DR Wagon
74=4 DR Wagon
77=Open Body 93" Whlbase
78=Open Body 103" Whlbase - Export
T=2WD
J,N=4WD
U=4WD (RHD)

BODY STYLES:

YJ=Wrangler (4X4) "S"
Weangler (4X4) SE
Wrangler (4X4) Sahara
Wrangler (4X4) Renegade
XJ=Cherokee SE
Cherokee Sport
Cherokee Country
ZJ=Grand Cherokee SE
Grand Cherokee Laredo
Grand Cherolee Limited
ZG=Grand Cherokee European
Y1=Wrangler
X1=Cherokee
Z1=Grand Cherokee
KDX=Vehicles

AR = Use as Required - = Non Illustrated Part P.A.R. = Paint as Required

« RETURN TO GROUP INDEX

FRONT SPRING AND SHOCK ABSORBER CHEROKEE
Figure 2-140

2-140A

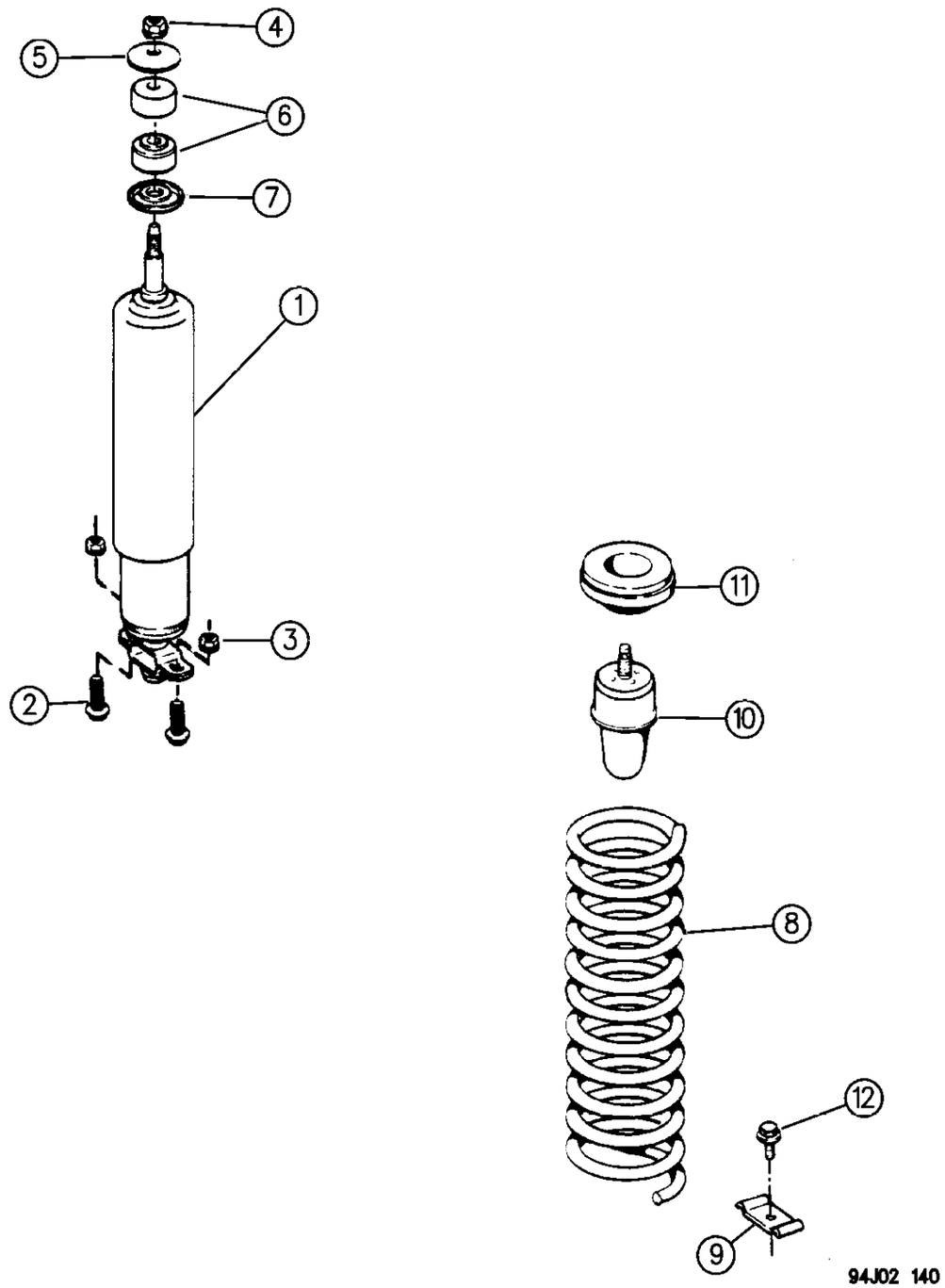

ITEM	PART NUMBER	QTY	BODY	MODEL	DESCRIPTION
1					SHOCK ABSORBER
	5208 7776	2	XJ		w/Std. Susp. (SFA or SDA)
	5208 7831	2	XJ		w/H.D. Susp. (SFE or SDB)
	5208 7831	2	X1		w/H.D. Susp. (SFE or SDB) w/KDX
	5200 3288	2			w/H.D. Susp., w/Off Road Package (SFD or SDU)
2	J420 0402	4			SCREW
3	1150 2811	4			NUT
4	J012 0369	2			NUT
5	J316 5076	2			RETAINER
6	J321 6638	4			GROMMET
7	J314 6809	2			RETAINER
8					SPRING, Front
	5200 1113	AR			Std. Duty, Coded FD (#570) ZTD,ZFD
	5200 1114	AR			Std. Duty, Coded FE (#607) ZTF,ZFF
	5200 1115	AR			Std. Duty, Coded FF (#646) ZTF,ZFF
	5200 1116	AR			Std. Duty, Coded FG (#688) ZTG,ZFG
	5200 1117	AR			Std. Duty, Coded FH (#733) ZTH,ZFH
	5200 1118	AR			Std. Duty, Coded FJ (#780) ZTJ,ZFJ,ZUJ
	5200 1119	AR			Std. Duty, Coded FK (#831) ZUK,ZFK
	5200 1120	AR			H.D., Coded GD (#578) ZVD,ZGD
	5200 1122	AR			H.D., Coded GF (#670) ZVF,ZGF
	5200 1121	AR			H.D., Coded GE (#622) ZVE,ZGE
	5200 1123	AR			H.D., Coded GG (#720) ZVG,ZGG
	5200 1124	AR			H.D., Coded GH (#775) ZVH,ZGH
	5200 1125	AR			H.D., Coded GJ (#834) ZVJ,ZGJ
	5200 1793	AR			H.D., Coded GK ZVK,ZGK
	5200 1794	AR			H.D., Coded GL ZVL,ZGL
9	5300 0899	2			BRACKET
10	5200 4295	2			CUSHION
11	5200 0229	2			ISOLATOR
12	S150 0086	2			SCREW

MODEL CODES:

72=2 DR Wagon
74=4 DR Wagon
77=Open Body 93" Whlbase
78=Open Body 103" Whlbase - Export
T=2WD
J,N=4WD
U=4WD (RHD)

BODY STYLES:

YJ=Wrangler (4X4) "S"
Weangler (4X4) SE
Wrangler (4X4) Sahara
Wrangler (4X4) Renegade
XJ=Cherokee SE
Cherokee Sport
Cherokee Country
ZJ=Grand Cherokee SE
Grand Cherokee Laredo
Grand Cherolee Limited
ZG=Grand Cherokee European
Y1=Wrangler
X1=Cherokee
Z1=Grand Cherokee
KDX=Vehicles

AR = Use as Required - = Non Illustrated Part P.A.R. = Paint as Required

« RETURN TO GROUP INDEX

SUSPENSION ARMS, FRONT CHEROKEE
Figure 2-150

2-150

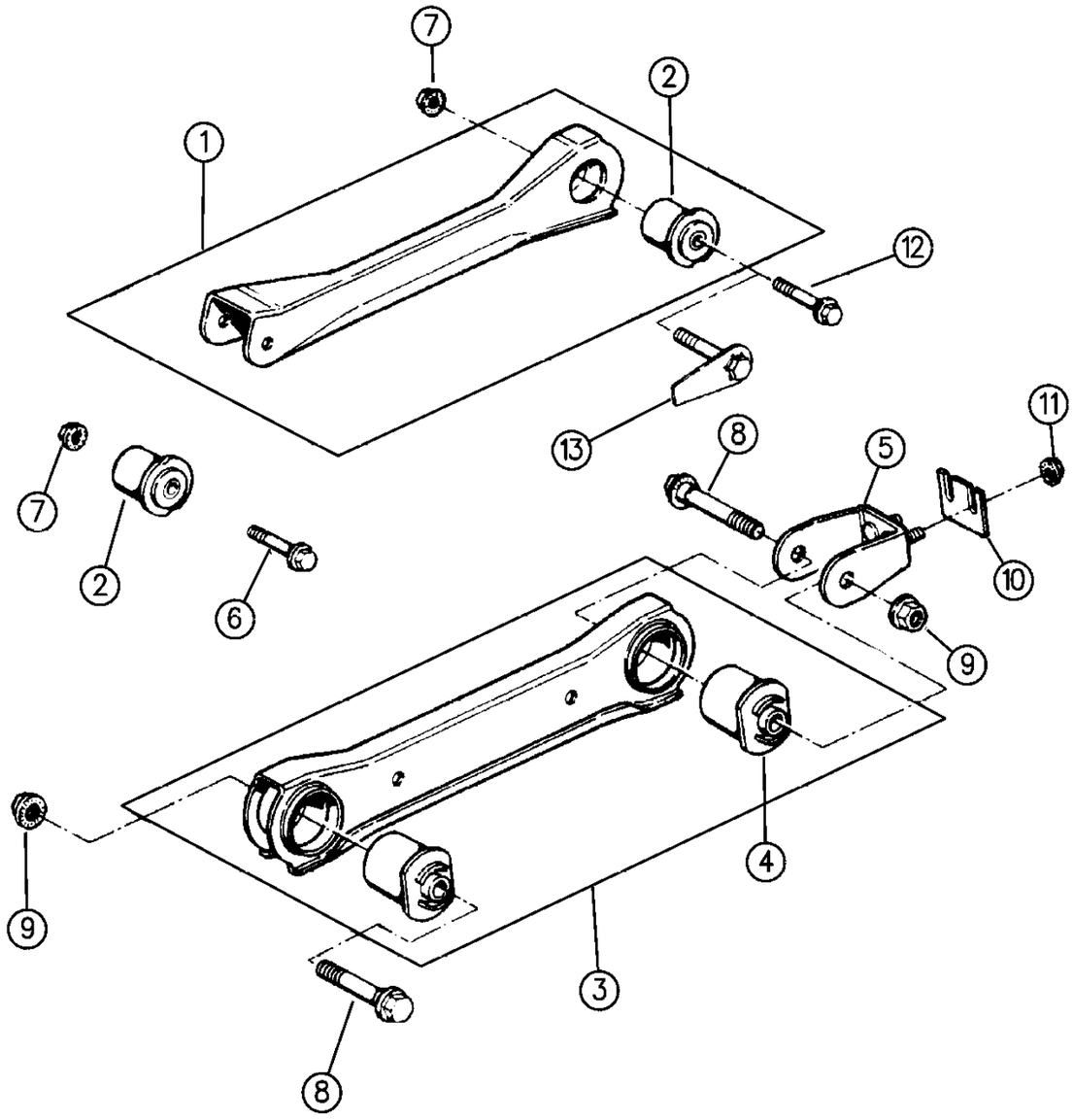

94J02 150

ITEM	PART NUMBER	QTY	BODY	MODEL	DESCRIPTION
1	5208 7710	2			ARM, Suspension Upper
2	5203 8025	4			BUSHING
3	5200 1162	2			ARM, Suspension Lower
4	5200 1161	4			BUSHING
5	5200 0532	2			CLEVIS, Suspension ***
6	3420 2640	2			BOLT
7	1150 6007	4			NUT
8	3420 2118	4			BOLT
9	1150 2814	4			NUT
10					SHIM
	5200 0234	AR			Thickness = .95mm
	5200 3976	AR			Thickness = 4.00mm
11	1150 2811	4			NUT
12	3420 2641	2			BOLT
13	3420 3013	2			BOLT

MODEL CODES:

72=2 DR Wagon
74=4 DR Wagon
77=Open Body 93" Whlbase
78=Open Body 103" Whlbase - Export
T=2WD
J,N=4WD
U=4WD (RHD)

BODY STYLES:

YJ=Wrangler (4X4) "S"
Weangler (4X4) SE
Wrangler (4X4) Sahara
Wrangler (4X4) Renegade
XJ=Cherokee SE
Cherokee Sport
Cherokee Country
ZJ=Grand Cherokee SE
Grand Cherokee Laredo
Grand Cherolee Limited
ZG=Grand Cherokee European
Y1=Wrangler
X1=Cherokee
Z1=Grand Cherokee
KDX=Vehicles

AR = Use as Required - = Non Illustrated Part P.A.R. = Paint as Required

SUSPENSION, FRONT SPRING WITH CONTROL ARMS AND TRACK BAR GRAND CHEROKEE (ZJ)
Figure 2-160

2-160

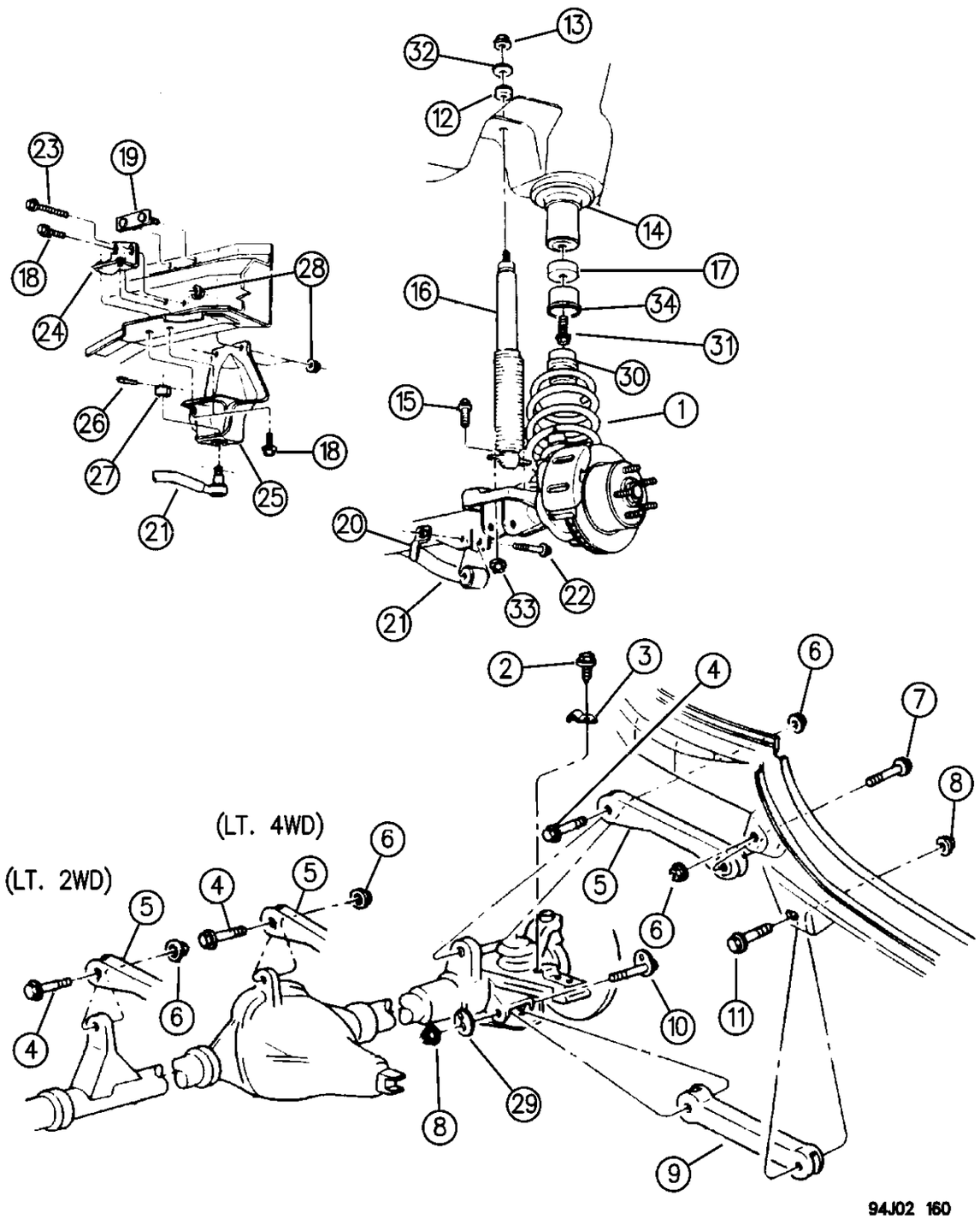

ITEM	PART NUMBER	QTY	BODY	MODEL	DESCRIPTION
1					SPRING, Front Coil
	5208 8102	AR			w/Std. Susp. Coded (FJ), (ZUJ,ZFJ)
	5208 8103	AR			w/Std. Susp. Coded (FK), (ZUK,ZFK)
	5208 8181	AR			w/Std. Susp. Coded (FL), (ZUL,ZFL)
	5208 8361	AR			w/Std. Susp. Coded (FM), (ZUM,ZFM)
	5208 8362	AR			w/Std. Susp. Coded (FN), (ZUN,ZFN)
	5208 8104	AR			w/H.D. Susp. Coded (GK), (ZVK,ZGK)
	5208 8105	AR			w/H.D. Susp. Coded (GL), (ZVL,ZGL)
	5208 8363	AR			w/H.D. Susp. Coded (GN), (ZVN,ZGN)
	5208 9141	AR			w/H.D. Susp. Coded (GP), w/AWE (Up Country Pkg.), (ZVP, ZGP)
	5208 9171	AR			w/Std. Susp. Coded (DL), (ZSL,ZDL)
2	6502 468	2			SCREW
3	5200 5917	2			BRACKET, Spring Retainer
4	6502 469	2			BOLT
5	5208 7711	2			ARM, Control Upper
-	5208 7709	4			BUSHING, Control Arm Upper
6	6502 696	4			NUT
7					BOLT
	6502 472	2			w/4.0L Eng.
	6502 759	2			w/5.2L Eng.
8	6502 698	4			NUT
9	5208 7786	2			ARM, Control Lower
-	5203 7830	2			BUSHING, Control Arm Lower Front
-	5208 7720	2			BUSHING, Control Arm Lower Rear
10	6504 238	2			BOLT, w/Cam M14x2.00x110.00 (38mm Cam Dia.)
11	6502 470	2			BOLT
12					GROMMET
	5208 7769	2			Upper
	5208 7768	2			Lower
13	6502 556	2			NUT
14	5208 7767	2			ISOLATOR, Front Spring Upper
15	J420 0402	4			BOLT, Shock Mtg. Lwr.
16		2			SHOCK ABSORBER, Front
	5208 7840	2			w/Std. Susp. (SFA,SDA) w/4.0L Eng.
	5208 9057	2			w/Std. Susp. (SFA,SDA) w/5.2L Eng.
	4741 675	2			w/AWE (Up Country or Off Road Pkg.)
	5208 8490	2	ZG		w/Std. Susp.
17	5200 5645	2			SPACER
18	6502 557	3			BOLT
19	5200 1493	1			PLATE, Track Bar
20	6502 561	1			RETAINER, Nut

MODEL CODES:

72=2 DR Wagon
74=4 DR Wagon
77=Open Body 93" Whlbase
78=Open Body 103" Whlbase - Export
T=2WD
J,N=4WD
U=4WD (RHD)

BODY STYLES:

YJ=Wrangler (4X4) "S"
Weangler (4X4) SE
Wrangler (4X4) Sahara
Wrangler (4X4) Renegade
XJ=Cherokee SE
Cherokee Sport
Cherokee Country
ZJ=Grand Cherokee SE
Grand Cherokee Laredo
Grand Cherolee Limited
ZG=Grand Cherokee European
Y1=Wrangler
X1=Cherokee
Z1=Grand Cherokee
KDX=Vehicles

AR = Use as Required - = Non Illustrated Part P.A.R. = Paint as Required

SUSPENSION, FRONT SPRING WITH CONTROL ARMS AND TRACK BAR GRAND CHEROKEE (ZJ)
Figure 2-160

2-160

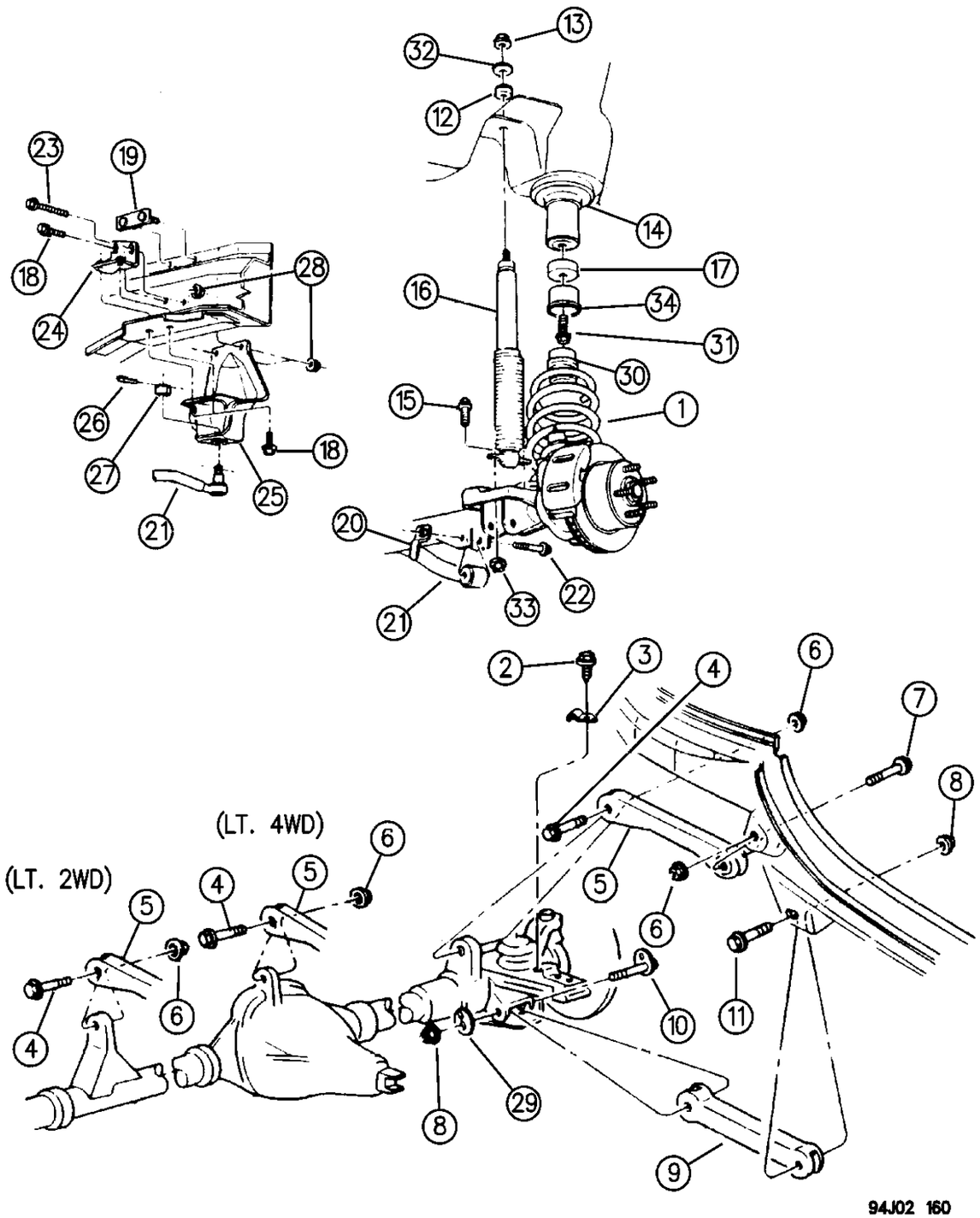

ITEM	PART NUMBER	QTY	BODY	MODEL	DESCRIPTION
21					BAR, Track
	5200 7118	1			w/LHD
	5305 4317	1			w/RHD
22	6502 554	1			BOLT
23	6502 560	1			BOLT
24	5200 7120	1			BRACKET, Track Bar Mtg.
-	5305 4362	1	ZG		BRACKET, Track Bar Reinforcement
25	5200 7121	1			BRACKET, Track Bar Mtg.
26	1101 0069	AR			PIN, Cotter
27	6034 358	1			NUT
28	6502 697	3			NUT
29					WASHER, Cam
	6503 333	2			1994-95, ID=M14.4, OD=38.00, THK=6.50
	6504 236	2			1996, ID=14.4, OD=38.00, THK=6.80
30	5208 7636	2			BUMPER, Jounce
31	6100 402	2			BOLT, M10x1.5x35.00
32	5200 5574	2			RETAINER
	5200 5575	2			w/AWE (Up Country or Off Road Pkg.)
33	6101 695	4			NUT
34	5208 7635	2			CUP, Jounce Bumper

MODEL CODES:

72=2 DR Wagon
74=4 DR Wagon
77=Open Body 93" Whlbase
78=Open Body 103" Whlbase - Export
T=2WD
J,N=4WD
U=4WD (RHD)

BODY STYLES:

YJ=Wrangler (4X4) "S"
Weangler (4X4) SE
Wrangler (4X4) Sahara
Wrangler (4X4) Renegade
XJ=Cherokee SE
Cherokee Sport
Cherokee Country
ZJ=Grand Cherokee SE
Grand Cherokee Laredo
Grand Cherolee Limited
ZG=Grand Cherokee European
Y1=Wrangler
X1=Cherokee
Z1=Grand Cherokee
KDX=Vehicles

AR = Use as Required - = Non Illustrated Part P.A.R. = Paint as Required

SHAFTS, FRONT AXLE W/DISCONNECT WRANGLER, (YJ)
Figure 2-210

2-210

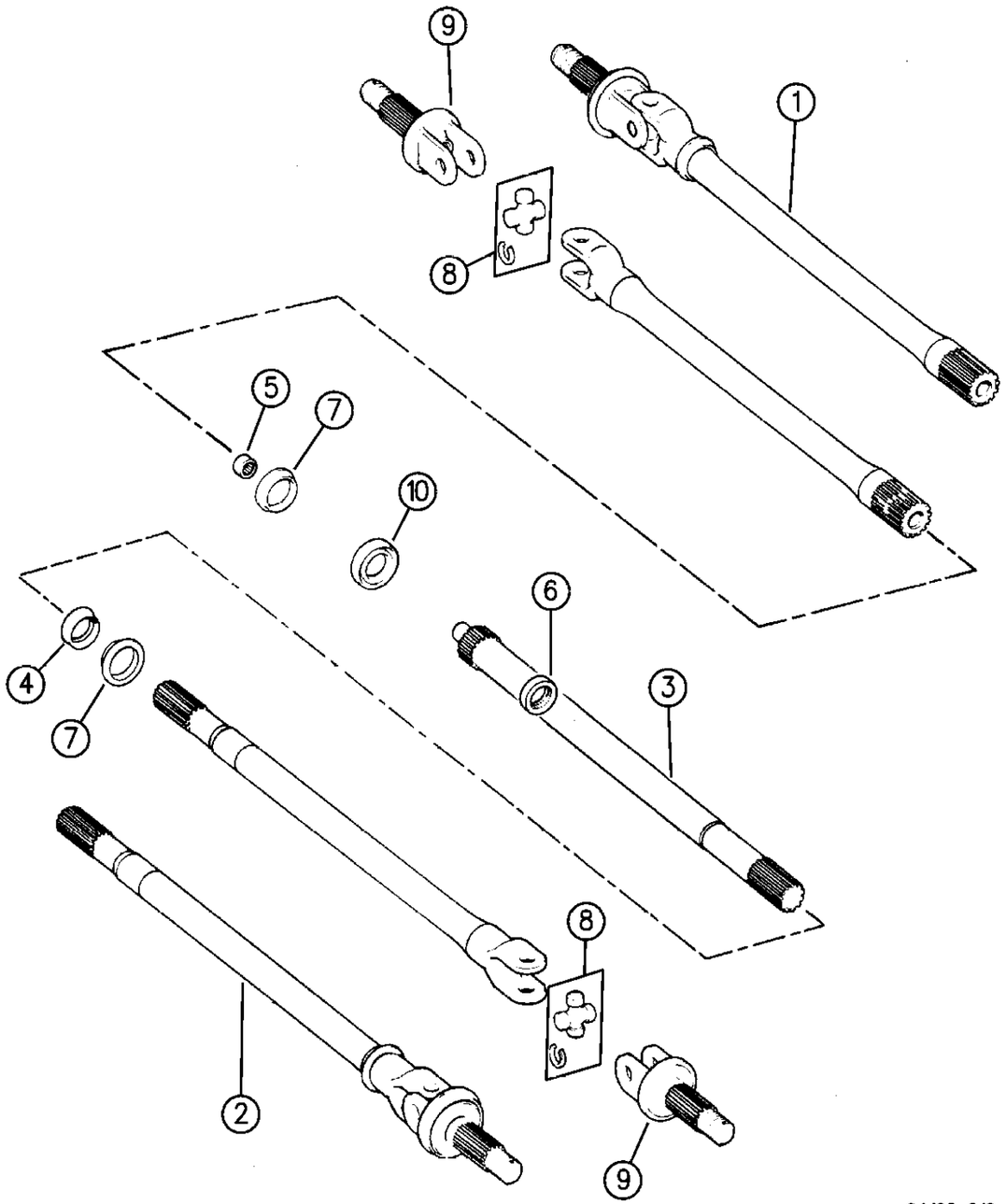

ITEM	PART NUMBER	QTY	BODY	MODEL	DESCRIPTION
1					SHAFT ASSEMBLY, Axle
	5252 145	1			Rt. w/o ABS
	4741 033	1			Rt. w/ABS
2					SHAFT ASSEMBLY, Axle
	5252 585	1			Lt. w/o ABS
	4874 307	1			Lt. w/ABS
3	5252 594	1			SHAFT, Intermediate
4	4874 477	1			SEAL
5	5252 686	1			BUSHING
6	5252 687	1			BUSHING
7	8350 7105	1			SLINGER, Dust
8					JOINT, Universal
	J812 6637	AR			w/o ABS, w/Small Dia. Caps 1.060"
	4137 757	AR			w/ABS, w/Large Dia. Caps 1.187"
9					SHAFT, Outer
	8350 0184	2			w/o ABS
	4713 190	2			w/ABS
10	8350 3504	1			SEAL

MODEL CODES:

72=2 DR Wagon
74=4 DR Wagon
77=Open Body 93" Whlbase
78=Open Body 103" Whlbase - Export
T=2WD
J,N=4WD
U=4WD (RHD)

BODY STYLES:

YJ=Wrangler (4X4) "S"
Weangler (4X4) SE
Wrangler (4X4) Sahara
Wrangler (4X4) Renegade

XJ=Cherokee SE
Cherokee Sport
Cherokee Country

ZJ=Grand Cherokee SE
Grand Cherokee Laredo
Grand Cherolee Limited
ZG=Grand Cherokee European

Y1=Wrangler
X1=Cherokee
Z1=Grand Cherokee
KDX=Vehicles

AR = Use as Required - = Non Illustrated Part P.A.R. = Paint as Required

« RETURN TO GROUP INDEX

SHAFTS, FRONT AXLE - KDX W/O DISCONNECT WRANGLER, (Y1)
Figure 2-220

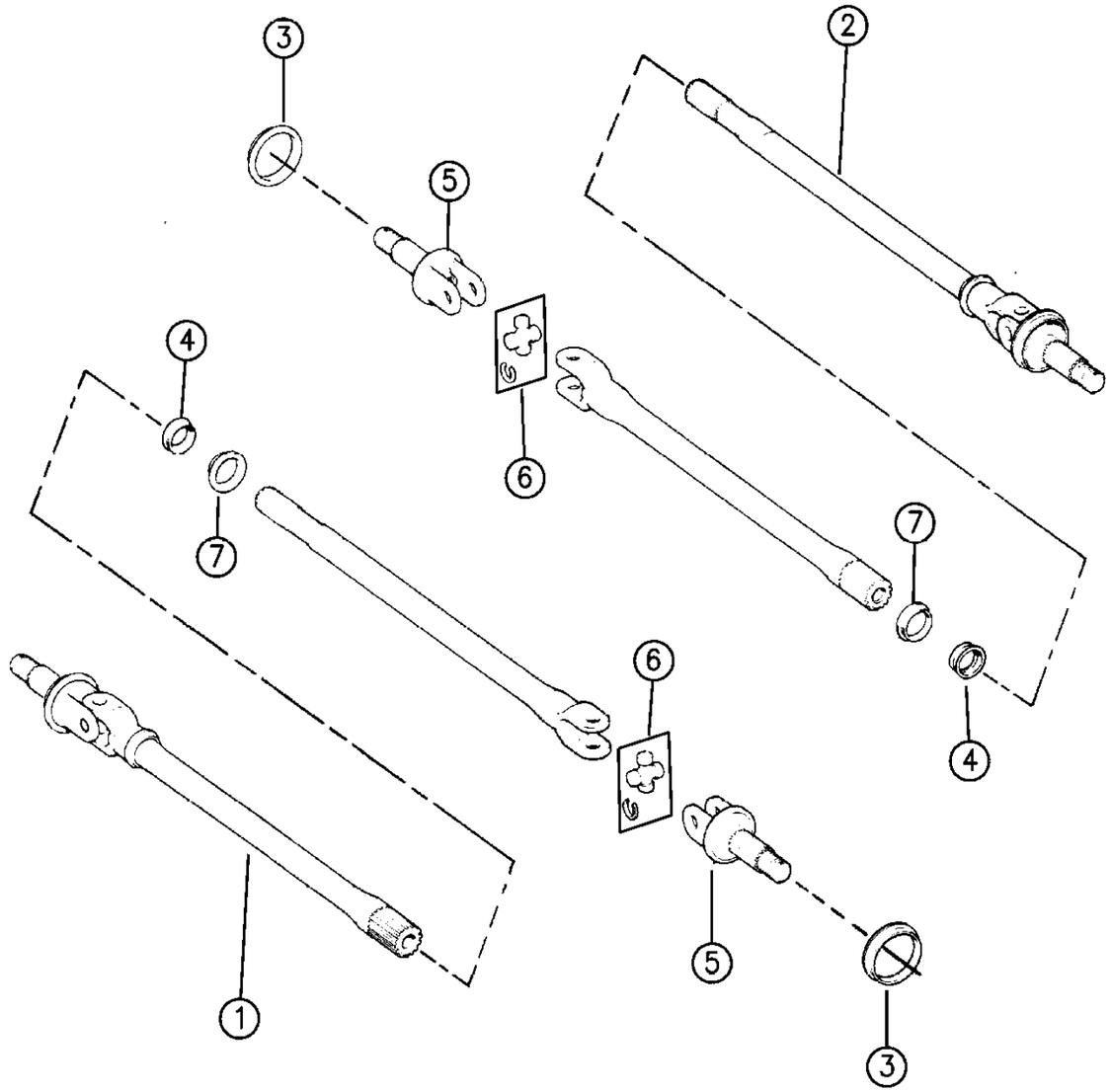

94J02 220

ITEM	PART NUMBER	QTY	BODY	MODEL	DESCRIPTION
1	5252 584	1			SHAFT, Axle Rt.
2	5252 585	1			SHAFT, Axle Lt.
3	8350 0201	AR			SLINGER, Dust
4	J812 1781	2			SEAL
5	4636 059	2			SHAFT, Outer
6	J812 6637	2			JOINT, Universal
7	8350 7105	2			SLINGER, Oil

MODEL CODES:

72=2 DR Wagon
74=4 DR Wagon
77=Open Body 93" Whlbase
78=Open Body 103" Whlbase - Export
T=2WD
J,N=4WD
U=4WD (RHD)

BODY STYLES:

YJ=Wrangler (4X4) "S"
Weangler (4X4) SE
Wrangler (4X4) Sahara
Wrangler (4X4) Renegade
XJ=Cherokee SE
Cherokee Sport
Cherokee Country
ZJ=Grand Cherokee SE
Grand Cherokee Laredo
Grand Cherolee Limited
ZG=Grand Cherokee European
Y1=Wrangler
X1=Cherokee
Z1=Grand Cherokee
KDX=Vehicles

AR = Use as Required - = Non Illustrated Part P.A.R. = Paint as Required

SHAFTS, FRONT AXLE W/O DISCONNECT CHEROKEE, GRAND CHEROKEE (ZJ)
Figure 2-230

2-230B

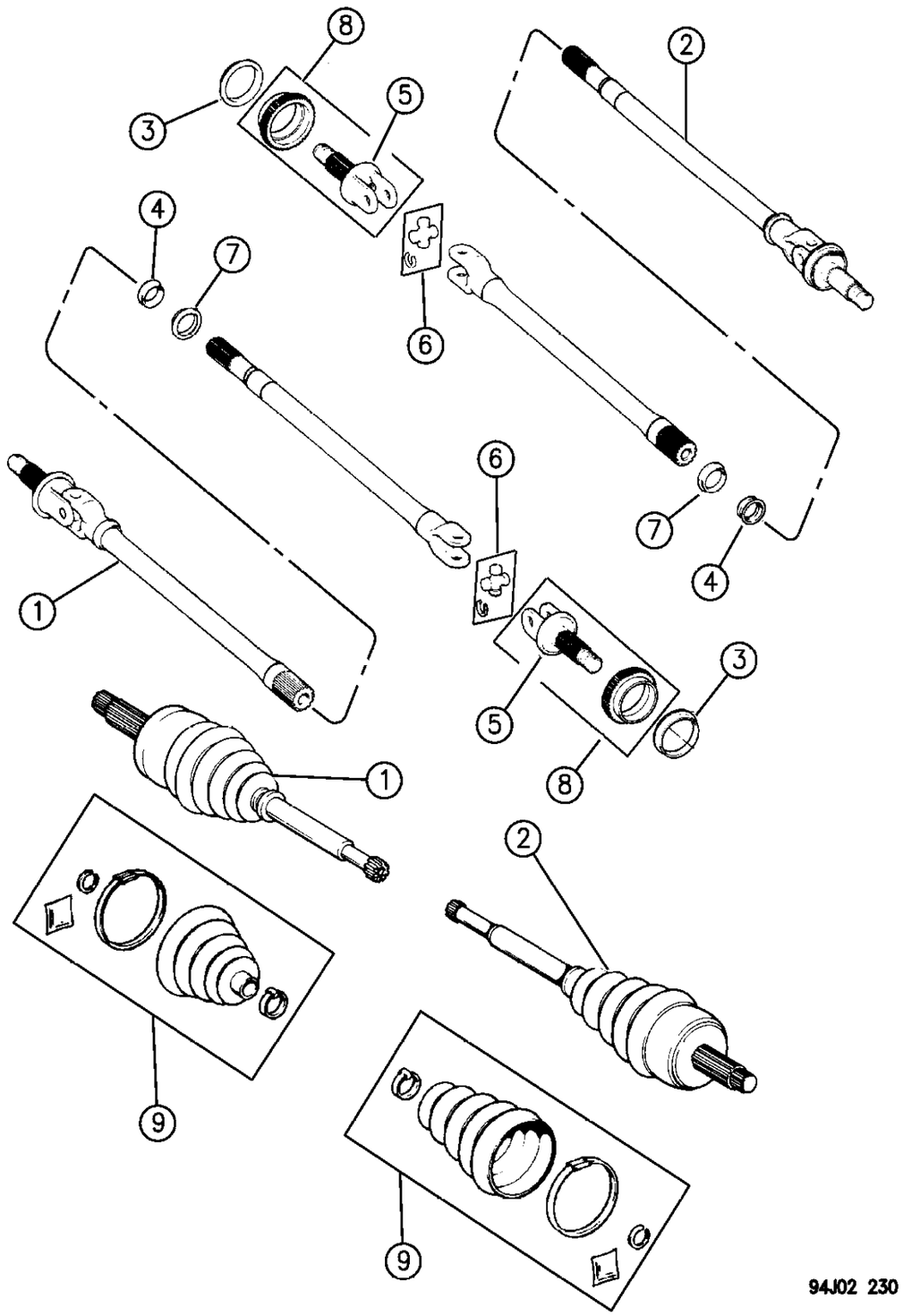

ITEM	PART NUMBER	QTY	BODY	MODEL	DESCRIPTION
1					SHAFT, Axle Rt.
	5252 584	1	XJ		Rt., w/o Anti-Lock Braking System
	4713 188	1	XJ		Rt., w/Anti-Lock Braking System
	4740 970	1	ZJ		Rt., w/Carden U-Joint Assy.
	4720 380	1	ZJ		Rt. w/C/V Joint (Assy. Includes C/V, Boot, Clamps, Tripod and Shaft)
2					SHAFT, Axle Lt.
	5252 585	1	XJ		Lt., w/o Anti-Lock Braking System
	4713 189	1	XJ		Lt., w/Anti-Lock Braking system
	4740 971	1	ZJ		Lt., w/Carden U-Joint Assy.
	4720 381	1	ZJ		Lt. w/C/V Joint (Assy. Includes C/V, Boot, Clamps, Tripod and Shaft)
3	8350 0201	2			SLINGER, Dust
4	J812 1781	2			SEAL
5	4636 059	2			SHAFT, Outer w/o ABS
6					JOINT, Universal
	J812 6637	AR	XJ		With 1.060" Diameter Caps
	4137 757	AR	XJ		With 1.187" Diameter Caps
	4137 757	AR	ZJ		
7	8350 7105	2			SLINGER, Oil
8	4713 190	2			SHAFT, Outer w/ABS
9	4796 233	2	ZJ		BOOT PACKAGE, Outer C.V.

MODEL CODES:

72=2 DR Wagon	77=Open Body 93" Whlbase	T=2WD	U=4WD (RHD)
74=4 DR Wagon	78=Open Body 103" Whlbase - Export	J,N=4WD	

BODY STYLES:

YJ=Wrangler (4X4) "S"	XJ=Cherokee SE	ZJ=Grand Cherokee SE	Y1=Wrangler
Weangler (4X4) SE	Cherokee Sport	Grand Cherokee Laredo	X1=Cherokee
Wrangler (4X4) Sahara	Cherokee Country	Grand Cherolee Limited	Z1=Grand Cherokee
Wrangler (4X4) Renegade		ZG=Grand Cherokee European	KDX=Vehicles

AR = Use as Required - = Non Illustrated Part P.A.R. = Paint as Required

10 W/DISCONNECT WRANGLER, (YJ)
Figure 2-310

2-310

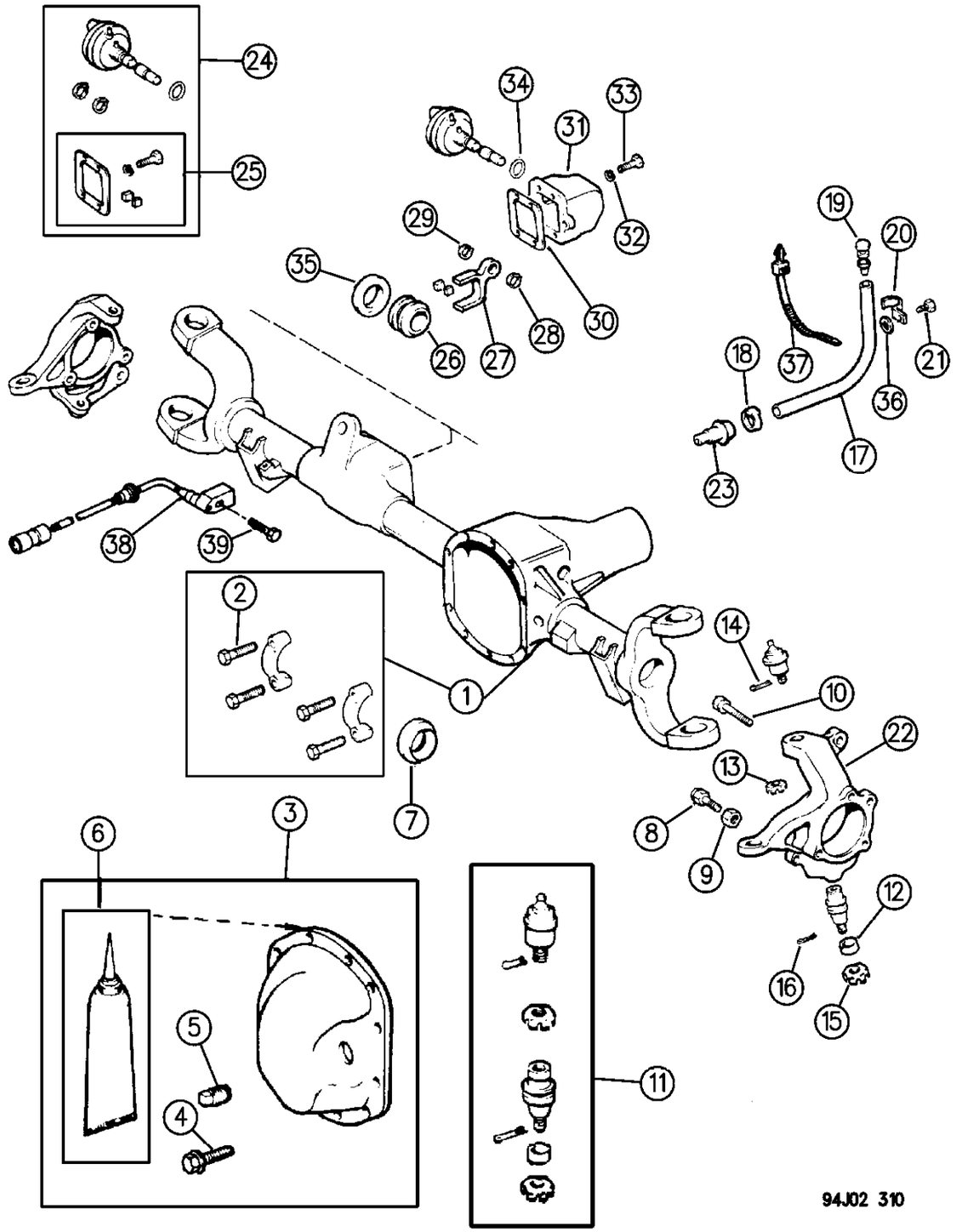

ITEM	PART NUMBER	QTY	BODY	MODEL	DESCRIPTION
1	5252 963	1			HOUSING, Front Axle
2					BOLT
	8350 1515	4			1/2-13x2.25
	4897 482AA	4			7/16-14x2.25
3	5252 583	1			COVER PACKAGE
4	J027 3573	10			BOLT
5					PLUG
	S010 3869	1			3/4"-14
	J400 4751	1			1/2"-14
6	J899 3317	1			SEALER, Gasket in a Tube ***
7	J812 1781	1			SEAL, Left
8	1791 701	1			BOLT, Jam
9	S011 4494	1			NUT, Jam
10	3420 1535	6			BOLT
11	8350 0202	1			SOCKET PACKAGE ***
12	8350 0203	1			RING, Split
13	J012 5258	1			NUT
14	J812 1392	1			PIN, Cotter
15	J812 3318	1			NUT
16	1101 0069	1			PIN, Cotter
17	J812 5823	1			HOSE, Vent (Bulk)
18	J322 7851	1			CLAMP
19	J535 2955	1			BREATHER ***
20	J014 0780	1			CLIP
21	J018 0121	1			SCREW
22	5206 7576-7	1			KNUCKLE, Steering
23	8350 4653	1			VENT
24	4506 116	1			MOTOR PACKAGE, Front Axle Vacuum ***
25	J813 3708	1			CLIP PACKAGE ***
26	8350 4813	1			COLLAR, Axle Shaft Shifter
27	5252 599	1			FORK, Axle Shift
	4137 731	1			CLIP, Shift Fork
	5600 3999	1			SWITCH, w/Wire, Shift Ind. (Dana #44060)
	5209 912	1			GASKET, Switch
28	4137 729	1			RING, Snap
29	4137 728	1			RING, Snap
30	4137 732	1			GASKET, Cover
31	4384 169	1			COVER, Axle Shift
32	4137 733	4			WASHER
33	4137 734	4			BOLT
34	4137 726	1			O-RING
35					SEAL, Rt.

MODEL CODES:

72=2 DR Wagon
74=4 DR Wagon
77=Open Body 93" Whlbase
78=Open Body 103" Whlbase - Export
T=2WD
J,N=4WD
U=4WD (RHD)

BODY STYLES:

YJ=Wrangler (4X4) "S"
Weangler (4X4) SE
Wrangler (4X4) Sahara
Wrangler (4X4) Renegade
XJ=Cherokee SE
Cherokee Sport
Cherokee Country
ZJ=Grand Cherokee SE
Grand Cherokee Laredo
Grand Cherolee Limited
ZG=Grand Cherokee European
Y1=Wrangler
X1=Cherokee
Z1=Grand Cherokee
KDX=Vehicles

AR = Use as Required - = Non Illustrated Part P.A.R. = Paint as Required

10 W/DISCONNECT WRANGLER, (YJ)
Figure 2-310

2-310

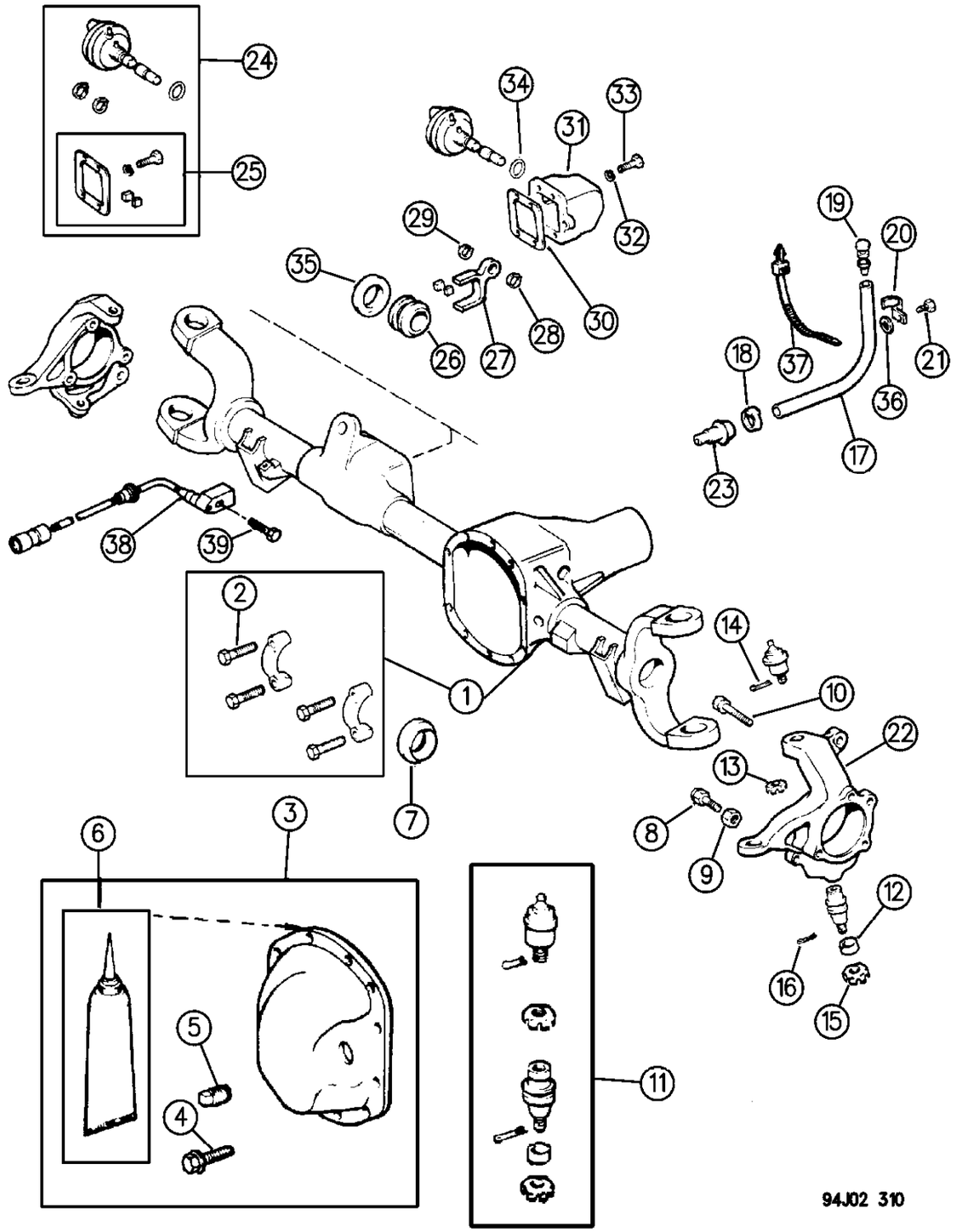

ITEM	PART NUMBER	QTY	BODY	MODEL	DESCRIPTION
	8350 0199	1			2.290"
	8350 3504	1			2.125"
36	J400 3084	1			NUT, Push
37	3420 1788	2			STRAP
38	5200 5940	2			SENSOR, w/ABS
	5602 6996-7	1			BRACKET
39	8350 4920-1	2			BOLT

MODEL CODES:

72=2 DR Wagon
74=4 DR Wagon
77=Open Body 93" Whlbase
78=Open Body 103" Whlbase - Export
T=2WD
J,N=4WD
U=4WD (RHD)

BODY STYLES:

YJ=Wrangler (4X4) "S"
Weangler (4X4) SE
Wrangler (4X4) Sahara
Wrangler (4X4) Renegade

XJ=Cherokee SE
Cherokee Sport
Cherokee Country

ZJ=Grand Cherokee SE
Grand Cherokee Laredo
Grand Cherolee Limited
ZG=Grand Cherokee European

Y1=Wrangler
X1=Cherokee
Z1=Grand Cherokee
KDX=Vehicles

AR = Use as Required - = Non Illustrated Part P.A.R. = Paint as Required

HOUSING, FRONT AXLE - KDX W/O DISCONNECT WRANGLER, (Y1)
Figure 2-320

2–320

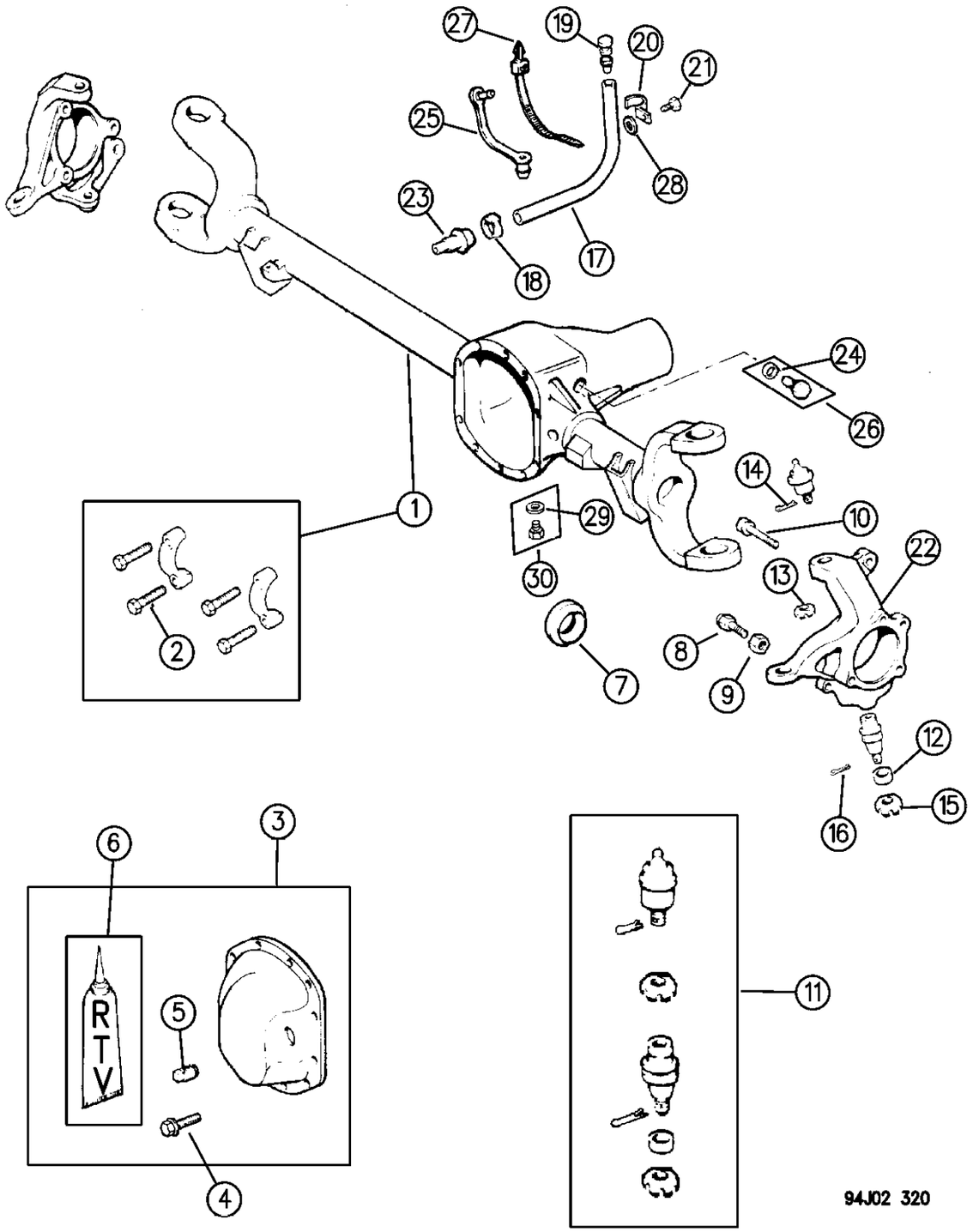

ITEM	PART NUMBER	QTY	BODY	MODEL	DESCRIPTION
1	8350 5516	1			HOUSING, Front Axle
2					BOLT
	8350 1515	4			1/2-13x2.25
	4897 482AA	4			7/16-14x2.25
3	8350 0194	1			COVER PACKAGE
4	J027 3573	10			BOLT
5					PLUG
	S010 3869	1			3/4"-14
	J400 4751	1			1/2"-14
6	J899 3317	1			SEALER, Gasket in a Tube ***
7	J812 1781	2			SEAL
8	1791 701	1			BOLT, Jam
9	S011 4494	1			NUT, Jam
10	3420 1535	6			BOLT
11	8350 0202	1			SOCKET PACKAGE ***
12	8350 0203	1			RING, Split
13	J012 5258	1			NUT
14	J812 1392	1			PIN, Cotter
15	J812 3318	1			NUT
16	1101 0069	1			PIN, Cotter
17	J812 5823	1			HOSE, Vent (Bulk)
18	J322 7851	1			CLAMP
19	J535 2955	1			BREATHER ***
20	J014 0780	1			CLIP
21	1150 1608	1			SCREW
22	5206 7576-7	1			KNUCKLE, Steering
23	8350 4653	1			VENT
24	3300 0322	1			GASKET, Sensor
25	J400 1712	1			STRAP
26	8350 1425	1			PLUG PACKAGE ***
27	3420 1788	2			STRAP
28	J400 3084	1			NUT, Push
29	J317 0271	1			GASKET
30	J812 1449	1			PLUG PACKAGE ***

MODEL CODES:

72=2 DR Wagon
74=4 DR Wagon
77=Open Body 93" Whlbase
78=Open Body 103" Whlbase - Export
T=2WD
J,N=4WD
U=4WD (RHD)

BODY STYLES:

YJ=Wrangler (4X4) "S"
Weangler (4X4) SE
Wrangler (4X4) Sahara
Wrangler (4X4) Renegade
XJ=Cherokee SE
Cherokee Sport
Cherokee Country
ZJ=Grand Cherokee SE
Grand Cherokee Laredo
Grand Cherolee Limited
ZG=Grand Cherokee European
Y1=Wrangler
X1=Cherokee
Z1=Grand Cherokee
KDX=Vehicles

AR = Use as Required - = Non Illustrated Part P.A.R. = Paint as Required

« RETURN TO GROUP INDEX

HOUSING, FRONT AXLE 4 WHEEL DRIVE W/O DISCONNECT CHEROKEE, GRAND CHEROKEE (ZJ)
Figure 2-330

2–330

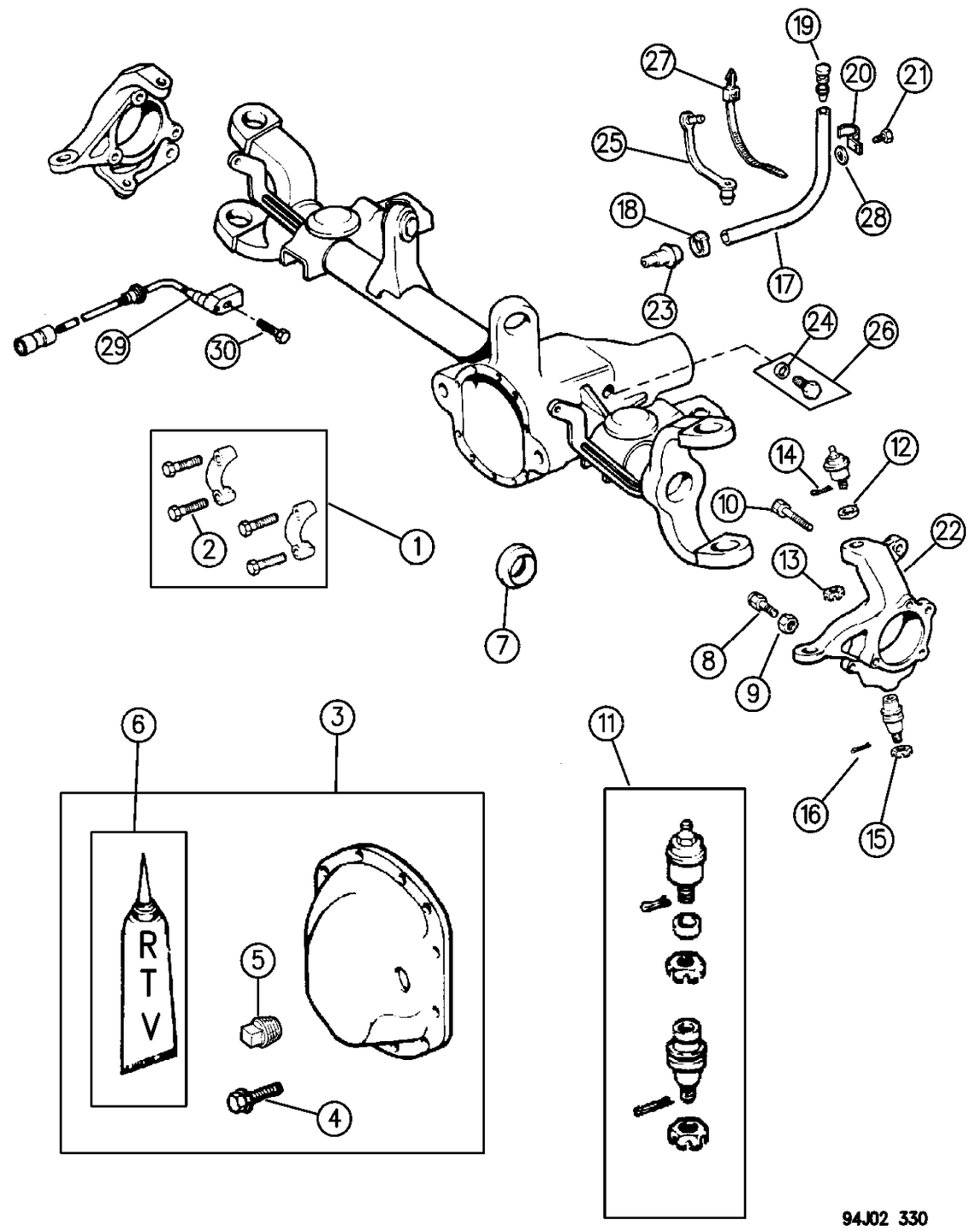

ITEM	PART NUMBER	QTY	BODY	MODEL	DESCRIPTION
1					HOUSING, Front Axle
	4773 429	1	XJ		w/LHD
	4773 458	1	XJ		w/RHD
	4797 774	1	XJ		w/RHD, Tagged 52099300 or 52099301
	4778 905	1	XJ		w/LHD, w/Diesel Eng.
	4741 624	1	ZJ,ZG		w/LHD, (Up To 1-4-96)
	4882 463	1	ZJ,ZG		w/LHD, (After 1-4-96)
	4874 014	1	ZG		w/RHD, (Up To 2-19-96)
	4882 605	1	ZG		w/RHD, (After 2-19-96)
2					BOLT
	8350 1515	4			1/2-13x2.25
	4897 482AA	4			7/16-14x2.25
3					COVER PACKAGE
	5252 583	1	XJ		
	4713 451	1	ZJ		
4	J027 3573	10			BOLT
5					PLUG
	S010 3869	1			3/4"-14
	J400 4751	1			1/2"-14
6	J899 3317	1			SEALER, Gasket in a Tube ***
7	J812 1781	2			SEAL
8	1791 701	1			BOLT, Jam
9	S011 4494	1			NUT, Jam
10	3420 1535	6			BOLT
11	8350 0202	1			SOCKET PACKAGE ***
12	8350 0203	1			RING, Split
13	J012 5258	1			NUT
14	J812 1392	1			PIN, Cotter
15	J812 3318	1			NUT
16	1101 0069	1			PIN, Cotter
17	J812 5823	1			HOSE, Vent (Bulk)(30.48")
18	J322 7851	1			CLAMP
19	J535 2955	1			BREATHER ***
20	3417 5327	1			CLIP
21	1150 1608	1			SCREW
22					KNUCKLE, Steering
	5206 7576-7	1			
23					VENT
	8350 4653	1	XJ		
	4720 944	1	ZJ		
24	3300 0322	1			GASKET
25	J400 1712	1			STRAP

MODEL CODES:

72=2 DR Wagon
74=4 DR Wagon
77=Open Body 93" Whlbase
78=Open Body 103" Whlbase - Export
T=2WD
J,N=4WD
U=4WD (RHD)

BODY STYLES:

YJ=Wrangler (4X4) "S"
Weangler (4X4) SE
Wrangler (4X4) Sahara
Wrangler (4X4) Renegade
XJ=Cherokee SE
Cherokee Sport
Cherokee Country
ZJ=Grand Cherokee SE
Grand Cherokee Laredo
Grand Cherolee Limited
ZG=Grand Cherokee European
Y1=Wrangler
X1=Cherokee
Z1=Grand Cherokee
KDX=Vehicles

AR = Use as Required - = Non Illustrated Part P.A.R. = Paint as Required

HOUSING, FRONT AXLE 4 WHEEL DRIVE W/O DISCONNECT CHEROKEE, GRAND CHEROKEE (ZJ)
Figure 2-330

2–330

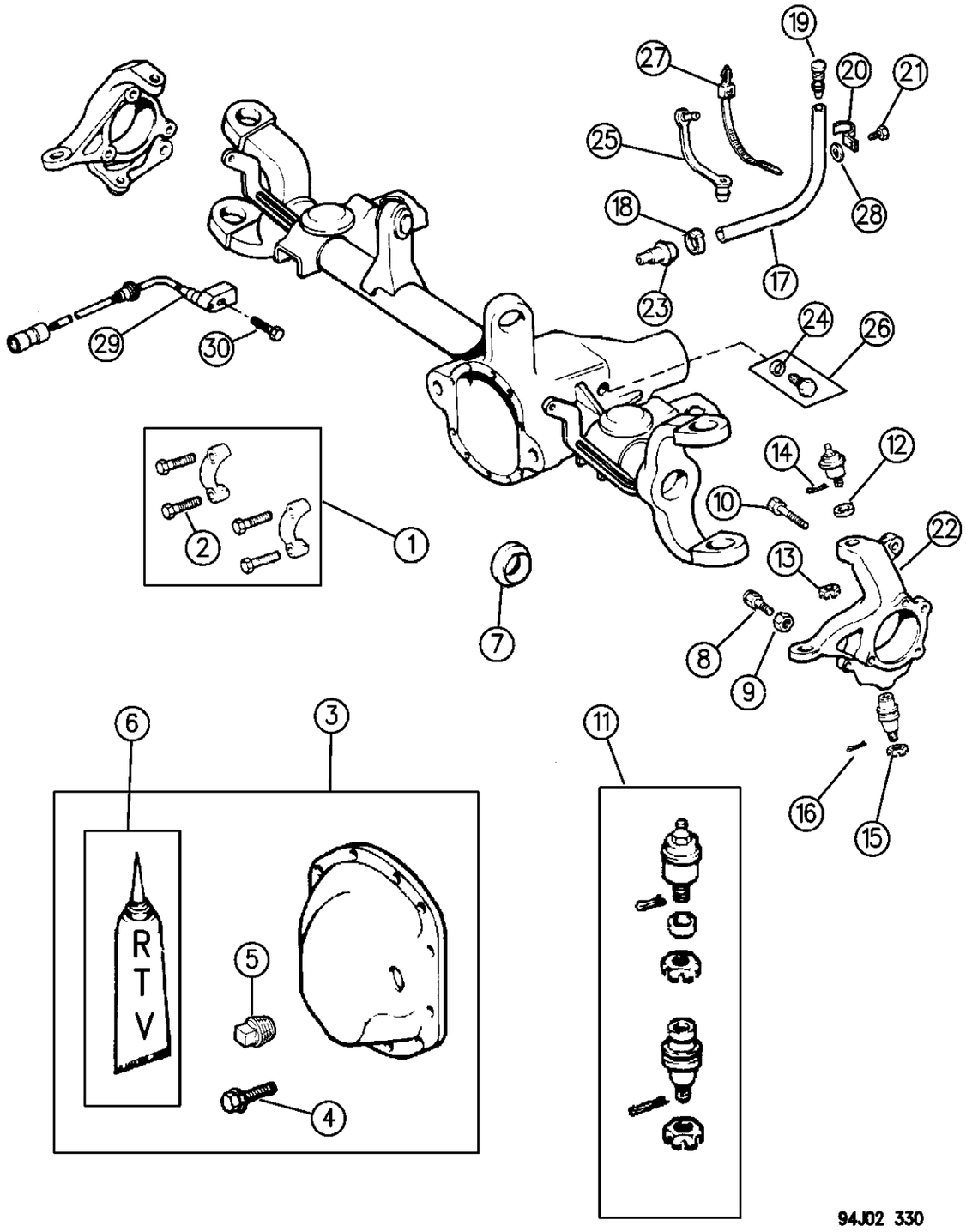

ITEM	PART NUMBER	QTY	BODY	MODEL	DESCRIPTION
26	8350 1425	1			PLUG PACKAGE ***
27	3420 1788	2			STRAP
28	J400 3084	1			NUT, Push
29					SENSOR, w/Anti-Lock Braking System
	5600 5217	2	XJ		
	5600 5216	2	ZJ		
30	8350 4920	2			BOLT w/Anti-Lock Braking System

MODEL CODES:

72=2 DR Wagon
74=4 DR Wagon
77=Open Body 93" Whlbase
78=Open Body 103" Whlbase - Export
T=2WD
J,N=4WD
U=4WD (RHD)

BODY STYLES:

YJ=Wrangler (4X4) "S"
Weangler (4X4) SE
Wrangler (4X4) Sahara
Wrangler (4X4) Renegade
XJ=Cherokee SE
Cherokee Sport
Cherokee Country
ZJ=Grand Cherokee SE
Grand Cherokee Laredo
Grand Cherolee Limited
ZG=Grand Cherokee European
Y1=Wrangler
X1=Cherokee
Z1=Grand Cherokee
KDX=Vehicles

AR = Use as Required - = Non Illustrated Part P.A.R. = Paint as Required

HOUSING, FRONT AXLE 2 WHEEL DRIVE CHEROKEE, GRAND CHEROKEE (ZJ)
Figure 2-340

2-340A

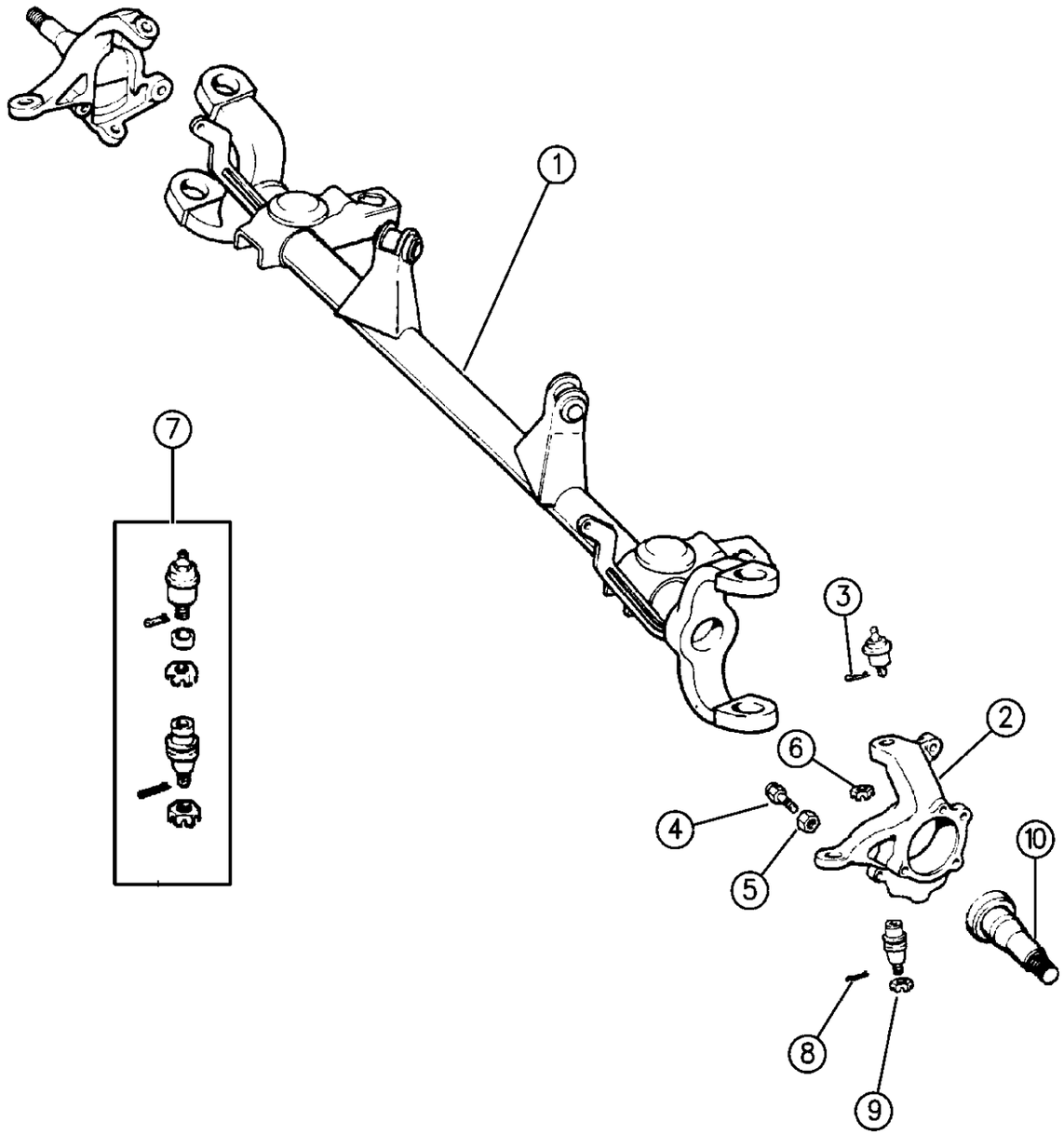

94J02 340A

ITEM	PART NUMBER	QTY	BODY	MODEL	DESCRIPTION
1					HOUSING, Front Axle
	4741 056	1	XJ		w/LHD
	4773 430	1	XJ		w/RHD
	4746 923	1	ZJ		
	4856 652	1	ZG		
2	5206 7576-7	1			KNUCKLE, Steering
3	J812 1392	1			PIN, Cotter
4	1791 701	1			BOLT, Jam
5	S011 4494	1			NUT, Jam
6	J012 5258	1			NUT
7	8350 0202	1			SOCKET PACKAGE ***
8	1101 0069	1			PIN, Cotter
9	J812 3318	1			NUT
10	4741 011	1			SHAFT, 2WD Dummy

MODEL CODES:

72=2 DR Wagon
74=4 DR Wagon
77=Open Body 93" Whlbase
78=Open Body 103" Whlbase - Export
T=2WD
J,N=4WD
U=4WD (RHD)

BODY STYLES:

YJ=Wrangler (4X4) "S"
Weangler (4X4) SE
Wrangler (4X4) Sahara
Wrangler (4X4) Renegade
XJ=Cherokee SE
Cherokee Sport
Cherokee Country
ZJ=Grand Cherokee SE
Grand Cherokee Laredo
Grand Cherolee Limited
ZG=Grand Cherokee European
Y1=Wrangler
X1=Cherokee
Z1=Grand Cherokee
KDX=Vehicles

AR = Use as Required - = Non Illustrated Part P.A.R. = Paint as Required

« RETURN TO GROUP INDEX

AXLE ASSEMBLY, FRONT WRANGLER, (YJ)
Figure 2-410

2-410

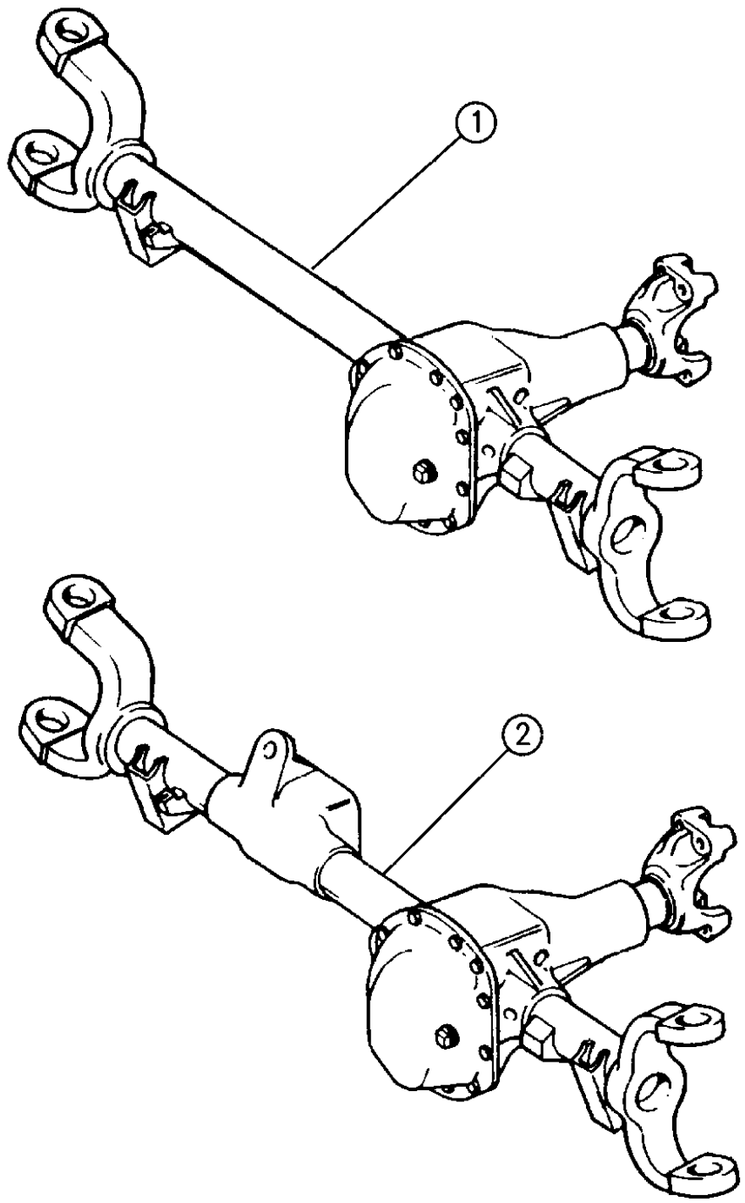

94J02 410

ITEM	PART NUMBER	QTY	BODY	MODEL	DESCRIPTION
1					AXLE ASSEMBLY, w/o Disconnect, KDX ***
	4741 047	1		Y1	4.11 Ratio, Tagged 52068365
	4741 046	1		Y1	3.55 Ratio, Tagged 52068364
2					AXLE ASSEMBLY, w/Disconnect ***
	5252 962	1		YJ	3.07 Ratio, Tagged 52068371, 52070100 or 52068375
	5252 964	1		YJ	3.55 Ratio, Tagged 52068373, 52070101 or 52068380
	4746 073	1		YJ	3.73 Ratio, Tagged 52010012, 52068612
	4637 925	1		YJ	4.10 Ratio, Tagged 52068372

MODEL CODES:

72=2 DR Wagon
74=4 DR Wagon
77=Open Body 93" Whlbase
78=Open Body 103" Whlbase - Export
T=2WD
J,N=4WD
U=4WD (RHD)

BODY STYLES:

YJ=Wrangler (4X4) "S"
Weangler (4X4) SE
Wrangler (4X4) Sahara
Wrangler (4X4) Renegade
XJ=Cherokee SE
Cherokee Sport
Cherokee Country
ZJ=Grand Cherokee SE
Grand Cherokee Laredo
Grand Cherolee Limited
ZG=Grand Cherokee European
Y1=Wrangler
X1=Cherokee
Z1=Grand Cherokee
KDX=Vehicles

AR = Use as Required - = Non Illustrated Part P.A.R. = Paint as Required

AXLE ASSEMBLY, FRONT 4 WHEEL DRIVE CHEROKEE, GRAND CHEROKEE (ZJ)
Figure 2-420

2-420

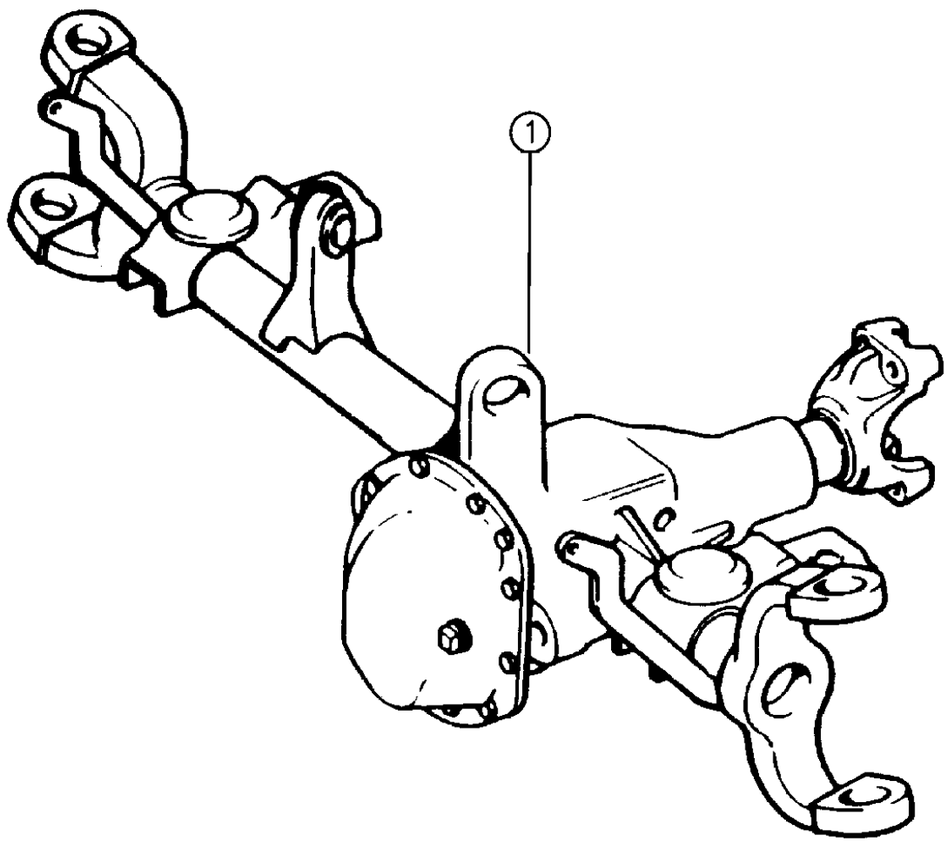

94J02 420

ITEM	PART NUMBER	QTY	BODY	MODEL	DESCRIPTION
1					AXLE ASSEMBLY, Front - w/o Disconnect Front Axle ***
	4773 453	1	XJ		3.07 Ratio, Tagged 52068517, 52068421, 52069198 or 52069193
	4773 457	1	XJ		3.55 Ratio, w/RHD, Tagged 52068559, 52068560, 52069199 or 52069200
	4773 428	1	XJ		3.55 Ratio, w/ or w/o Anti-Lock Brakes, Tagged520 68423, 52068425, 52070012, 52069194 or 52069197
	4773 455	1	XJ		3.73 Ratio, Tagged 52070013 or 52069196
	4778 909	1	XJ		3.73 Ratio, w/Diesel Eng., Tagged 52068737 or 52068738.
	4797 780	1	XJ		3.73 Ratio, w/Diesel Eng., w/RHD, Tagged 52099300 or 52099301.
	4773 454	1	XJ		4.10 Ratio, Tagged 52068424 or 52069195
	4773 459	1	XJ		4.10 Ratio, Tagged 52068564 or 52069201 w/RHD
	4741 625	1	ZJ		3.55 Ratio, Tagged 52069286, 52069297, 52069402 or 52069407 (Stamped# 75062-4X) (Up to 1-4-96)
	4864 905	1	ZJ		3.55 Ratio, w/242 Transfer Case, Tagged 52098724 (After 1-4-96)
	4778 829	1	ZJ		3.55 Ratio, w/249 Transfer Case, Tagged 52070005 (Up To 1-4-96)
	4882 468	1	ZJ		3.55 Ratio, w/249 Transfer Case, Tagged 52098726 (After 1-4-96)
	4741 626	1	ZJ		3.73 Ratio, Tagged 52069295, 52069405 or 52069401 (Up To 1-4-96)
	4864 841	1	ZJ		3.73 Ratio, w/242 Transfer Case, Tagged 52098725 (After 1-4-96)
	4778 813	1	ZJ		3.73 Ratio, Tagged 52070003 (Up To 1-4-96)
	4882 464	1	ZJ		3.73 Ratio, w/249 Transfer Case, Tagged 52098727 (After 1-4-96)
	4882 464	1	ZG		3.73 Ratio, w/249 Transfer Case, Tagged 52098727 (After 1-4-96)
	4864 841	1	ZG		3.73 Ratio, w/231 Transfer Case, Tagged 52098725 (After 2-19-96)
	4874 399	1	ZG		3.73 Ratio, Tagged 53055025, 52098939 RHD, w/231 Transfer Case
	4874 400	1	ZG		3.73 Ratio, Tagged 53055026, 52098940 RHD, w/249 Transfer Case

MODEL CODES:

72=2 DR Wagon
74=4 DR Wagon
77=Open Body 93" Whlbase
78=Open Body 103" Whlbase - Export
T=2WD
J,N=4WD
U=4WD (RHD)

BODY STYLES:

YJ=Wrangler (4X4) "S"
Weangler (4X4) SE
Wrangler (4X4) Sahara
Wrangler (4X4) Renegade
XJ=Cherokee SE
Cherokee Sport
Cherokee Country
ZJ=Grand Cherokee SE
Grand Cherokee Laredo
Grand Cherolee Limited
ZG=Grand Cherokee European
Y1=Wrangler
X1=Cherokee
Z1=Grand Cherokee
KDX=Vehicles

AR = Use as Required - = Non Illustrated Part P.A.R. = Paint as Required

DIFFERENTIAL, FRONT AXLE WRANGLER, (YJ)
Figure 2-610

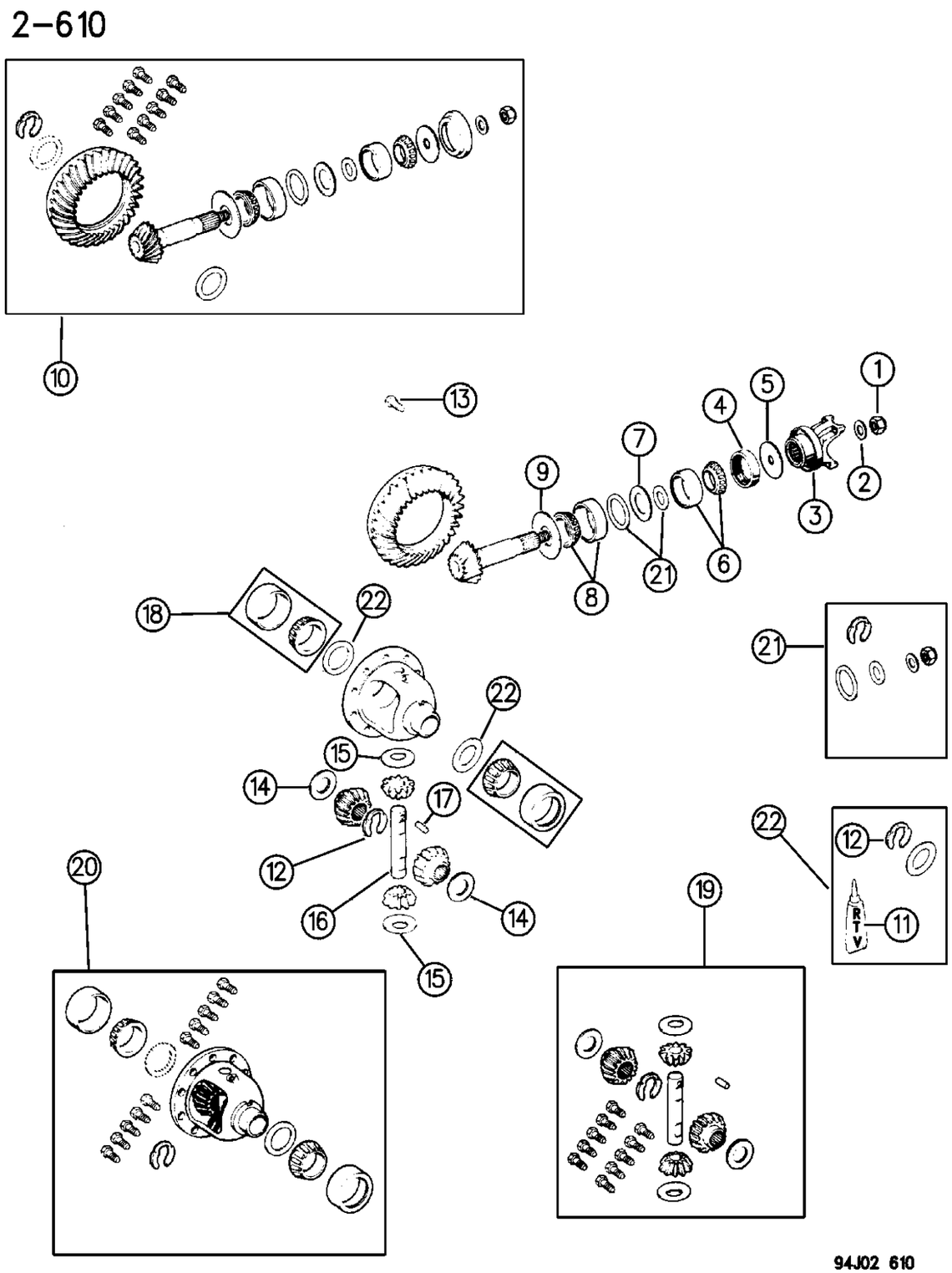

ITEM	PART NUMBER	QTY	BODY	MODEL	DESCRIPTION
1	J080 1367	1			NUT, Pinion
2	J063 6570	1			WASHER, Pinion
3	8350 3388	1			YOKE, Pinion
4	8350 3390	1			SEAL, Pinion
5	J063 6566	1			SLINGER, Dust
6	J812 4052	1			BEARING PACKAGE
7	J093 4937	1			BAFFLE ***
8	J812 6499	1			BEARING PACKAGE
9	3893 982	1			SLINGER, Oil
10					GEAR SET, Front Axle Ring And Pinion
	8350 0187	1			3.07 Ratio
	8350 5480	1			3.55 Ratio
	4746 074	1			3.73 Ratio
	8350 2353	1			4.10 Ratio
11	J899 3317	1			SEALER, RTV ***
12	4137 739	1			SNAP RING
13	J064 9454	10			BOLT
14	J813 3724	2			WASHER
15	J812 0831	2			WASHER
16	J094 6384	1			SHAFT, Differential
17	J063 6360	1			PIN
18	J812 6500	2			BEARING PACKAGE
19	5252 591	1			GEAR SET, Front Axle Differential
20					CASE, Front Axle Differential
	5252 582	1			3.07 & 3.55 Ratios
	5252 590	1			3.73 & 4.10 Ratios
21	8350 0192	1			SHIM PACKAGE
22	8350 0191	1			SHIM PACKAGE

MODEL CODES:

72=2 DR Wagon
74=4 DR Wagon
77=Open Body 93" Whlbase
78=Open Body 103" Whlbase - Export
T=2WD
J,N=4WD
U=4WD (RHD)

BODY STYLES:

YJ=Wrangler (4X4) "S"
Weangler (4X4) SE
Wrangler (4X4) Sahara
Wrangler (4X4) Renegade
XJ=Cherokee SE
Cherokee Sport
Cherokee Country
ZJ=Grand Cherokee SE
Grand Cherokee Laredo
Grand Cherolee Limited
ZG=Grand Cherokee European
Y1=Wrangler
X1=Cherokee
Z1=Grand Cherokee
KDX=Vehicles

AR = Use as Required - = Non Illustrated Part P.A.R. = Paint as Required

DIFFERENTIAL, FRONT AXLE CHEROKEE, GRAND CHEROKEE (ZJ)
Figure 2-620

2-620

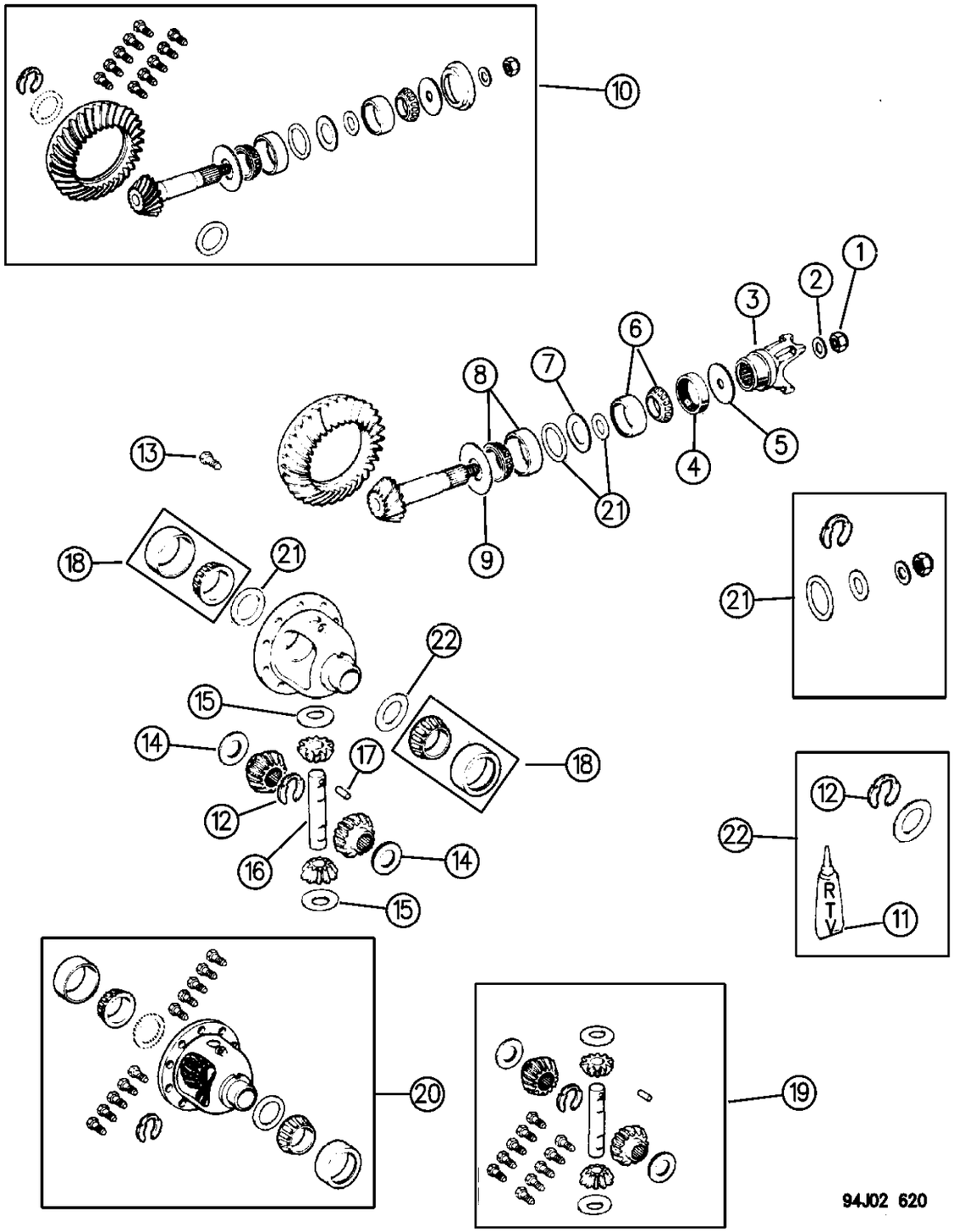

ITEM	PART NUMBER	QTY	BODY	MODEL	DESCRIPTION
1	J080 1367	1			NUT, Pinion
2	J063 6570	1			WASHER, Pinion
3					YOKE, Pinion
	8350 3388	1	XJ		
	8350 3388	1	ZJ		U-Joint Style Prop Shaft
	4778 812	1	ZJ		C.V. Joint Style Prop Shaft
4	8350 3390	1			SEAL, Pinion
5	J063 6566	1			SLINGER, Dust
6	J812 4052	1	XJ		BEARING PACKAGE
	5252 508	1	ZJ		
7	J093 4937	1	XJ		BAFFLE ***
-	4720 865	1	ZJ		SPACER, Pinion Crush (Up To 1-5-96)
-	4864 845	1	ZJ		SPACER, Pinion Crush (After 1-5-96)
8	J812 6499	1			BEARING PACKAGE
9	3893 982	1			SLINGER, Oil
10					GEAR SET, Front Axle Ring And Pinion
	8350 0187	1	XJ		3.07 Ratio
	8350 5480	1	XJ		3.55 Ratio
	4720 864	1	ZJ		3.55 Ratio (Up To 1-4-96)
	4864 906	1	ZJ		3.55 Ratio (After 1-4-96)
	4741 015	1	XJ		3.73 Ratio
	4746 074	1	XJ		3.73 Ratio w/RHD, (w/Tag # 52068737)
	4741 015	1	ZJ		3.73 Ratio, (Up To 1-4-96)
	4864 843	1	ZJ		3.73 Ratio, (After 1-4-96)
	4864 843	1	ZG		3.73 Ratio, w/Tag# 52098727, 1996
	4741 015	1	ZG		3.73 Ratio, w/Tag# 53055026, 1996
	8350 2353	1	XJ		4.10 Ratio
11	J899 3317	1			SEALER, RTV
12	4137 739	1			SNAP RING
13	4720 891	1			SCREW PACKAGE
14	J813 3724	2			WASHER
15	J812 0831	2			WASHER
16	J094 6384	1			SHAFT, Differential
17	J063 6360	1			PIN
18	J812 6500	2			BEARING PACKAGE
19	5252 591	1			GEAR SET, Front Axle Differential
20					CASE, Front Axle Differential
	5252 582	1			3.07 or 3.55 Ratios
	5252 590	1			3.73 or 4.10 Ratios
21	8350 0192	1	XJ,MJ		SHIM PACKAGE
	4720 862	1	ZJ		(Up To 1-4-96)
	8350 0192	1	ZJ		(After 1-4-96)

MODEL CODES:

72=2 DR Wagon
74=4 DR Wagon
77=Open Body 93" Whlbase
78=Open Body 103" Whlbase - Export
T=2WD
J,N=4WD
U=4WD (RHD)

BODY STYLES:

YJ=Wrangler (4X4) "S"
Weangler (4X4) SE
Wrangler (4X4) Sahara
Wrangler (4X4) Renegade
XJ=Cherokee SE
Cherokee Sport
Cherokee Country
ZJ=Grand Cherokee SE
Grand Cherokee Laredo
Grand Cherolee Limited
ZG=Grand Cherokee European
Y1=Wrangler
X1=Cherokee
Z1=Grand Cherokee
KDX=Vehicles

AR = Use as Required - = Non Illustrated Part P.A.R. = Paint as Required

DIFFERENTIAL, FRONT AXLE CHEROKEE, GRAND CHEROKEE (ZJ)
Figure 2-620

2-620

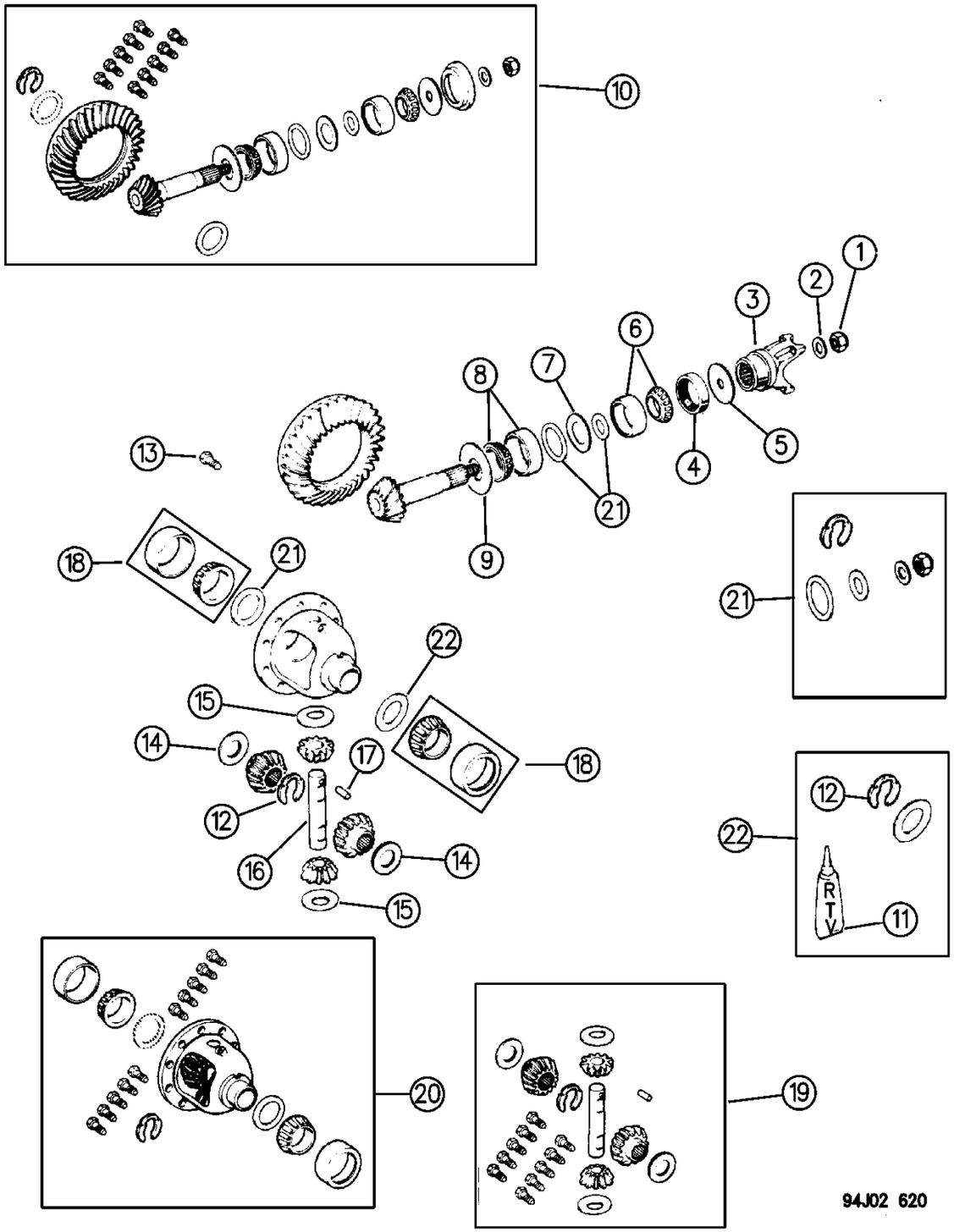

ITEM	PART NUMBER	QTY	BODY	MODEL	DESCRIPTION
22	8350 0191	1	XJ		SHIM PACKAGE
	4720 863	1	ZJ		

MODEL CODES:

72=2 DR Wagon
74=4 DR Wagon
77=Open Body 93" Whlbase
78=Open Body 103" Whlbase - Export
T=2WD
J,N=4WD
U=4WD (RHD)

BODY STYLES:

YJ=Wrangler (4X4) "S"
Weangler (4X4) SE
Wrangler (4X4) Sahara
Wrangler (4X4) Renegade
XJ=Cherokee SE
Cherokee Sport
Cherokee Country
ZJ=Grand Cherokee SE
Grand Cherokee Laredo
Grand Cherolee Limited
ZG=Grand Cherokee European
Y1=Wrangler
X1=Cherokee
Z1=Grand Cherokee
KDX=Vehicles

AR = Use as Required - = Non Illustrated Part P.A.R. = Paint as Required

SKID PLATE, FRONT AXLE CHEROKEE
Figure 2-810

2-810

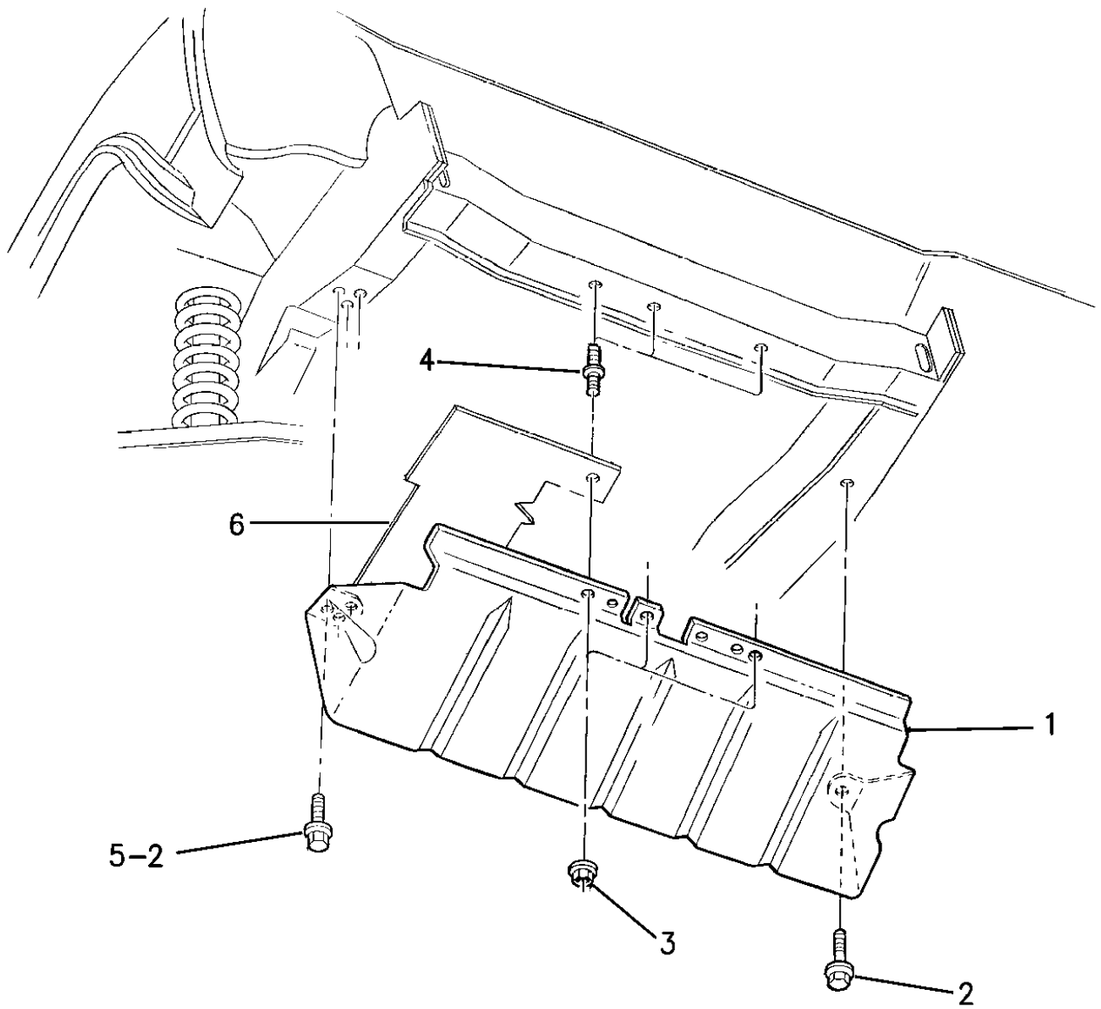

94J02 810

ITEM	PART NUMBER	QTY	BODY	MODEL	DESCRIPTION
1	8220 0613	1			PLATE, Front Skid, Axle and Steering
2	6502 467	AR			SCREW, M10x1.50x30.00
3	J420 0046	3			NUT, M8x1.25
4	3420 2209	3			STUD, M8x1.25x44.00
5	3420 2219	3			SCREW, w/Washer
6		1			SHIELD, Splash (Serv. In Group 7)

MODEL CODES:

72=2 DR Wagon
74=4 DR Wagon
77=Open Body 93" Whlbase
78=Open Body 103" Whlbase - Export
T=2WD
J,N=4WD
U=4WD (RHD)

BODY STYLES:

YJ=Wrangler (4X4) "S"
Weangler (4X4) SE
Wrangler (4X4) Sahara
Wrangler (4X4) Renegade

XJ=Cherokee SE
Cherokee Sport
Cherokee Country

ZJ=Grand Cherokee SE
Grand Cherokee Laredo
Grand Cherolee Limited
ZG=Grand Cherokee European

Y1=Wrangler
X1=Cherokee
Z1=Grand Cherokee
KDX=Vehicles

AR = Use as Required - = Non Illustrated Part P.A.R. = Paint as Required

SAGIPARTS

GROUP-3
REAR AXLE

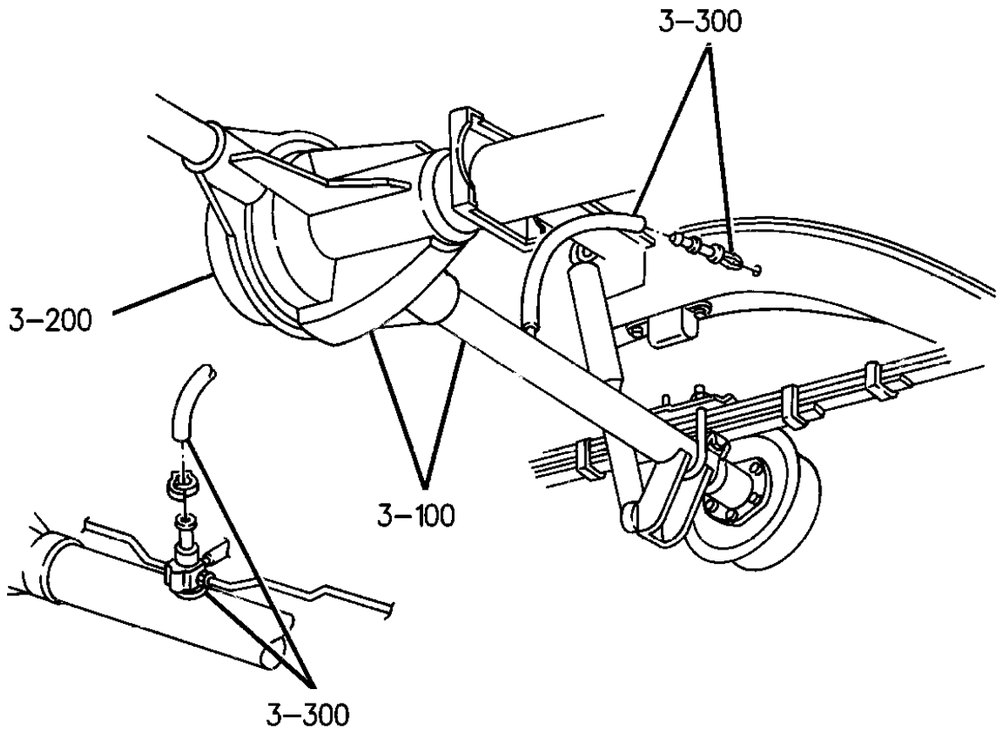

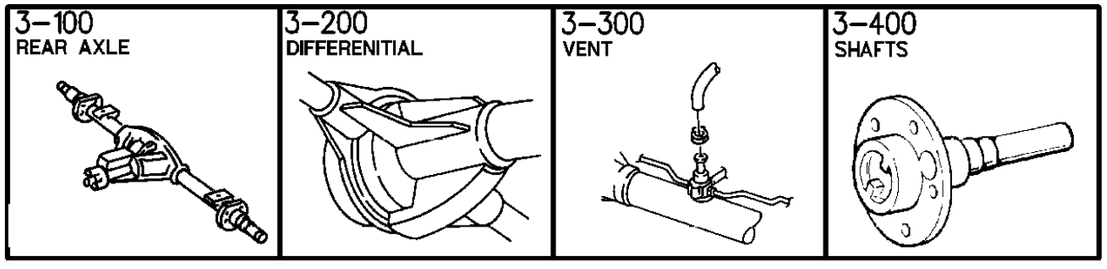

GROUP 3 - REAR AXLE

ILLUSTRATION TITLE — **GROUP-FIG. NO.**

REAR AXLE

AXLE ASSEMBLY, REAR DANA MODEL 35, DANA MODEL 44 KDX WRANGLER, YJ . . . . . Fig. 3-110
AXLE ASSEMBLY, REAR CHRYSLER MODEL 8 1/4 CHEROKEE . . . . . Fig. 3-120
AXLE ASSEMBLY, REAR DANA MODEL 35, DANA MODEL 44 CHEROKEE, GRAND CHEROKEE . . . . . Fig. 3-130

DIFFERENTIAL AND HOUSING

HOUSING AND DIFFERENTIAL, REAR AXLE DANA MODEL 35 W/O LOCKING DIFFERENTIAL WRANGLER, (YJ) . . . . . Fig. 3-210
HOUSING AND DIFFERENTIAL, REAR AXLE DANA MODEL 35 W/LOCKING DIFFERENTIAL WRANGLER, (YJ) . . . . . Fig. 3-220
HOUSING AND DIFFERENTIAL, REAR AXLE DANA MODEL 44 KDX W/O LOCKING DIFFERENTIAL WRANGLER (YJ) . . . . . Fig. 3-230
HOUSING AND DIFFERENTIAL, REAR AXLE DANA MODEL 44 KDX W/LOCKING DIFFERENTIAL WRANGLER, (YJ) . . . . . Fig. 3-240
HOUSING, REAR AXLE DANA MODEL 35 CHEROKEE, GRAND CHEROKEE . . . . . Fig. 3-250
HOUSING, REAR AXLE DANA MODEL 44 GRAND CHEROKEE . . . . . Fig. 3-255
DIFFERENTIAL, NON-LOCKING DANA MODEL 35 (DRJ,DRM) CHEROKEE, GRAND CHEROKEE . . . . . Fig. 3-260
DIFFERENTIAL, NON-LOCKING DANA MODEL 44 (DRK) GRAND CHEROKEE . . . . . Fig. 3-265
DIFFERENTIAL, LOCKING DANA MODEL 35 CHEROKEE, GRAND CHEROKEE . . . . . Fig. 3-270
DIFFERENTIAL, LOCKING DANA MODEL 44 (DRK) GRAND CHEROKEE . . . . . Fig. 3-275

REAR AXLE VENT

VENT, AXLE . . . . . Fig. 3-305

REAR AXLE SHAFTS

SHAFT, REAR AXLE DANA MODEL 35 WRANGLER, (YJ) . . . . . Fig. 3-410
SHAFT, REAR AXLE DANA MODEL 44 KDX WRANGLER, (YJ) . . . . . Fig. 3-420
SHAFT, REAR AXLE DANA MODEL 35 CHEROKEE, GRAND CHEROKEE . . . . . Fig. 3-430
SHAFT, REAR AXLE DANA MODEL 44 GRAND CHEROKEE . . . . . Fig. 3-440

AXLE ASSEMBLY, REAR DANA MODEL 35, DANA MODEL 44 KDX WRANGLER, YJ
Figure 3-110

3–110

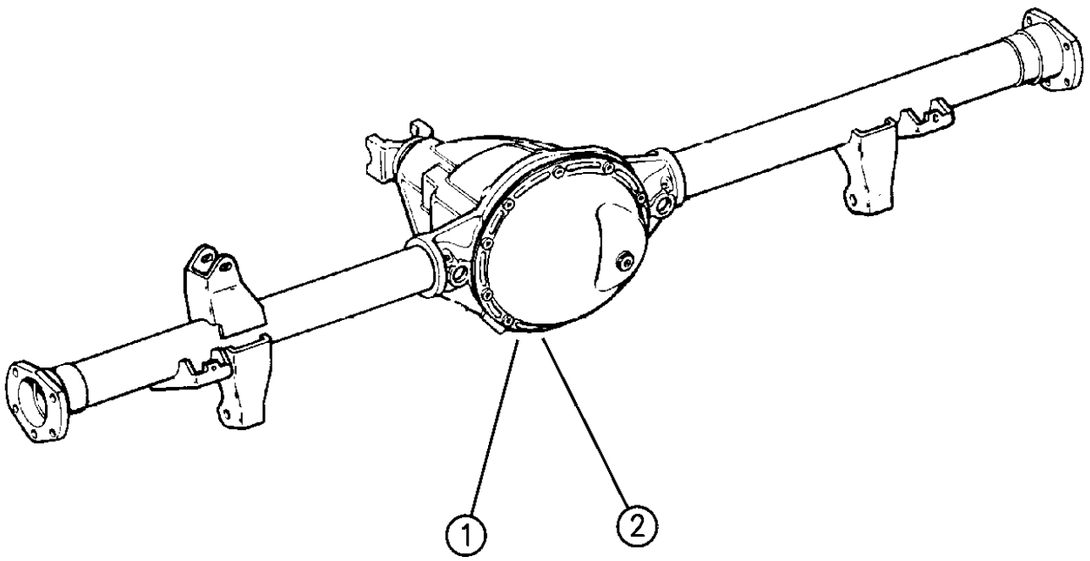

94J03 110

ITEM	PART NUMBER	QTY	BODY	MODEL	DESCRIPTION
1					DANA MODEL 35 - w/o LOCKING DIFFERENTIAL ***
	4773 967	1			3.07 Ratio, w/o ABS, Tagged 52068849
	4773 969	1			3.07 Ratio, w/ABS, Tagged 52068850
	4773 966	1			3.55 Ratio, w/o ABS, Tagged 52068848
	4778 056	1			3.55 Ratio, w/ABS, Tagged 52068851
	4773 215	1			3.73 Ratio, Tagged 52069056
	4773 216	1			3.73 Ratio, Tagged 52068722
	4773 954	1			4.11 Ratio, Tagged 52068832
2					DANA MODEL w/LOCKING DIFFERENTIAL ***
	4773 958	1			3.55 Ratio, w/o ABS, Tagged 52068835
	4778 057	1			3.55 Ratio, w/ABS, Tagged 52068860
	4746 064	1			3.73 Ratio, Tagged 52069057
	4773 217	1			3.73 Ratio, Tagged 52068723
	4746 934	1			4.11 Ratio, Tagged 52068830
1					DANA MODEL 44 KDX W/O LOCKING DIFFERENTIAL ***
	8350 5406	1			3.54 Ratio, Tagged 53005124
	4797 707	1			3.54 Ratio, Tagged 52068881
2					DANA MODEL 44 KDX W/LOCKING DIFFERENTIAL ***
	8350 5442	1			3.54 Ratio, Tagged 53005415
	4797 698	1			3.54 Ratio, Tagged 52068879
	4741 097	1			4.09 Ratio, Tagged 53005265
	4797 709	1			4.09 Ratio, Tagged 52068880

MODEL CODES:

72=2 DR Wagon
74=4 DR Wagon
77=Open Body 93" Whlbase
78=Open Body 103" Whlbase - Export
T=2WD
J,N=4WD
U=4WD (RHD)

BODY STYLES:

YJ=Wrangler (4X4) "S"
Weangler (4X4) SE
Wrangler (4X4) Sahara
Wrangler (4X4) Renegade
XJ=Cherokee SE
Cherokee Sport
Cherokee Country
ZJ=Grand Cherokee SE
Grand Cherokee Laredo
Grand Cherolee Limited
ZG=Grand Cherokee European
Y1=Wrangler
X1=Cherokee
Z1=Grand Cherokee
KDX=Vehicles

AR = Use as Required - = Non Illustrated Part P.A.R. = Paint as Required

AXLE ASSEMBLY, REAR CHRYSLER MODEL 8 1/4 CHEROKEE
Figure 3-120

3-120

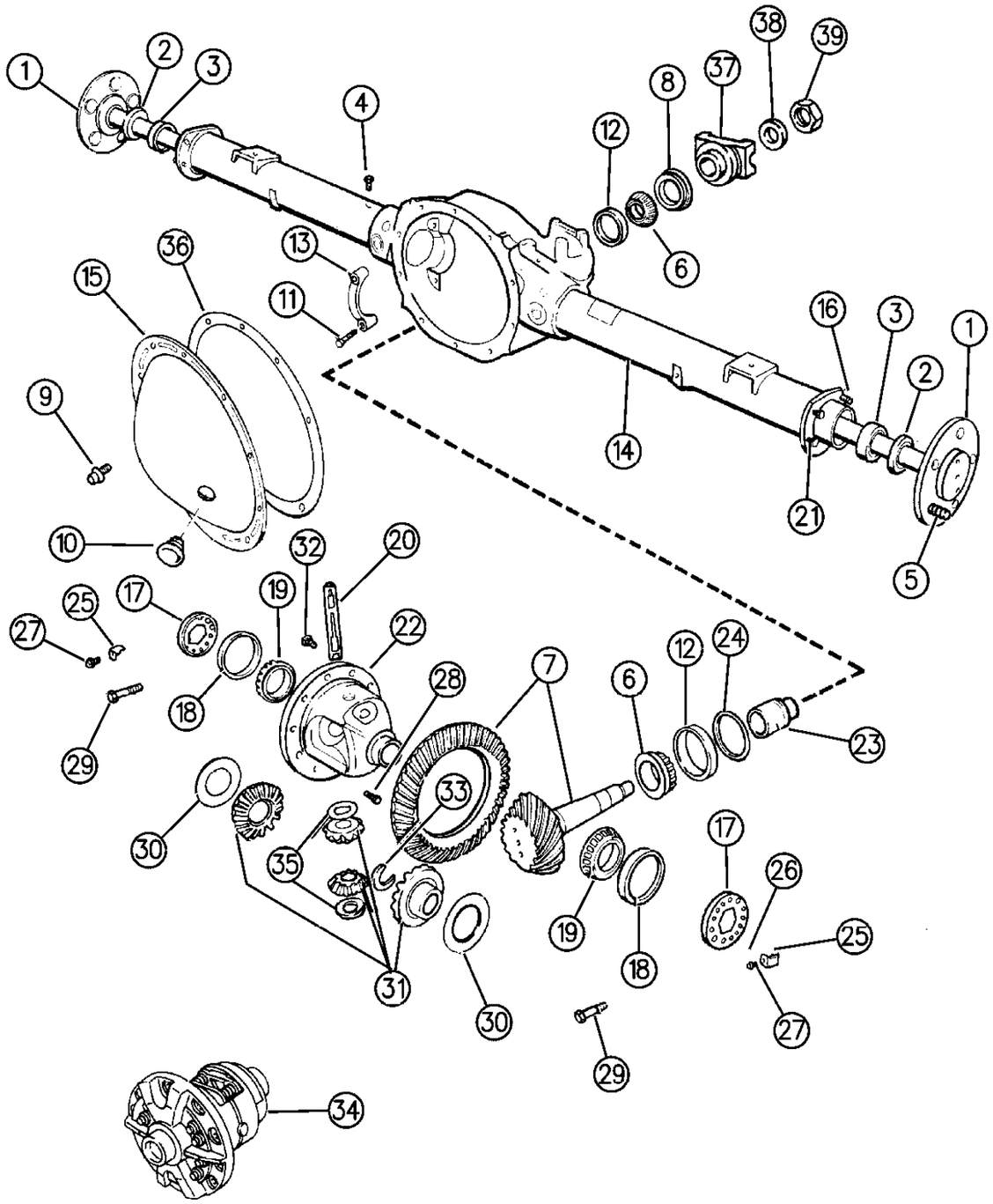

ITEM	PART NUMBER	QTY	BODY	MODEL	DESCRIPTION
Differential and Carrier Assemblies consist of the following items - except for items #1,2,3,4,16 and 21.					
					DIFFERENTIAL and CARRIER ASSEMBLY, w/o Anti-Spin ***
	4728 127	1			3.07 Ratio (Tag #52068668),(Up To 8-5-94)
	4797 528	1			3.07 Ratio (Tag #52069229), (After 8-5-94)
	4886 139AA	1			3.07 Ratio (Tag #52098933) 1996
	4713 491	1			3.55 Ratio (Tag #52068749 or 52068366), 1994
	4797 448	1			3.55 Ratio (Tag #52069227 or 52069233), 1995 (Up To 5-15-95)
	4856 529	1			3.55 Ratio (Tag #52069603 or 52069605), 1995 (After 5-15-95)
	4886 138AA	1			3.55 Ratio (Tag #52098930), 1996
	4713 526	1			4.10 Ratio (Tag #52068670)
	4856 801	1			4.10 Ratio (Tag #52068368)
	4797 533	1			4.10 Ratio (Tag #52069231 or 52069235)
	4886 148AA	1			4.10 Ratio (Tag #52098932) 1996
					DIFFERENTIAL and CARRIER ASSEMBLY, w/Anti-Spin ***
	4761 484	1			3.07 Ratio (Tag #52068669 or 52069008)
	4797 529	1			3.07 Ratio (Tag #52069230)
	4761 423	1			3.55 Ratio (Tag #52068800, 52068452, 52070047 or 52060061) 1994
	4797 510	1			3.55 Ratio (Tag #52069228 or 52069234) 1995 (Up To 5-15-95)
	4856 548	1			3.55 Ratio (Tag #52069604 or 52069606) 1995 (After 5-15-95)
	4886 133AA	1			3.55 Ratio (Tag #52098931) 1996 (Stamp No. 52069336)
	4761 491	1			4.10 Ratio (Tag #52068671, 52070048, 52060009) 1995 (Up To 5-15-95)
	4856 804	1			4.10 Ratio (Tag #52070062)
	4797 535	1			4.10 Ratio (Tag #52069232 or 52069236)
1					SHAFT, Drive
	5300 8134	2			1994-95 w/27 Tooth Spline
	5209 8902	2			1996 w/29 Tooth Spline
2	4137 426	2			SEAL, Drive Shaft
3	3744 495	2			BEARING, Drive Shaft
4	4137 696	1			SCREW, Axle Vent
5	5300 8135	10			STUD, Wheel
6					CONE, Drive Pinion Bearing
	2070 316	1			Outer
	2800 484	1			Inner
7					GEAR and PINION PACKAGE, Also Includes Items #6,8,12,23, and 32
	4728 707	1			3.07 Ratio
	3837 583	1			3.55 Ratio 1994-95
	4856 540	1			3.55 Ratio 1996

MODEL CODES:

72=2 DR Wagon
74=4 DR Wagon
77=Open Body 93" Whlbase
78=Open Body 103" Whlbase - Export
T=2WD
J,N=4WD
U=4WD (RHD)

BODY STYLES:

YJ=Wrangler (4X4) "S"
Weangler (4X4) SE
Wrangler (4X4) Sahara
Wrangler (4X4) Renegade
XJ=Cherokee SE
Cherokee Sport
Cherokee Country
ZJ=Grand Cherokee SE
Grand Cherokee Laredo
Grand Cherolee Limited
ZG=Grand Cherokee European
Y1=Wrangler
X1=Cherokee
Z1=Grand Cherokee
KDX=Vehicles

AR = Use as Required - = Non Illustrated Part P.A.R. = Paint as Required

AXLE ASSEMBLY, REAR CHRYSLER MODEL 8 1/4 CHEROKEE
Figure 3-120

3–120

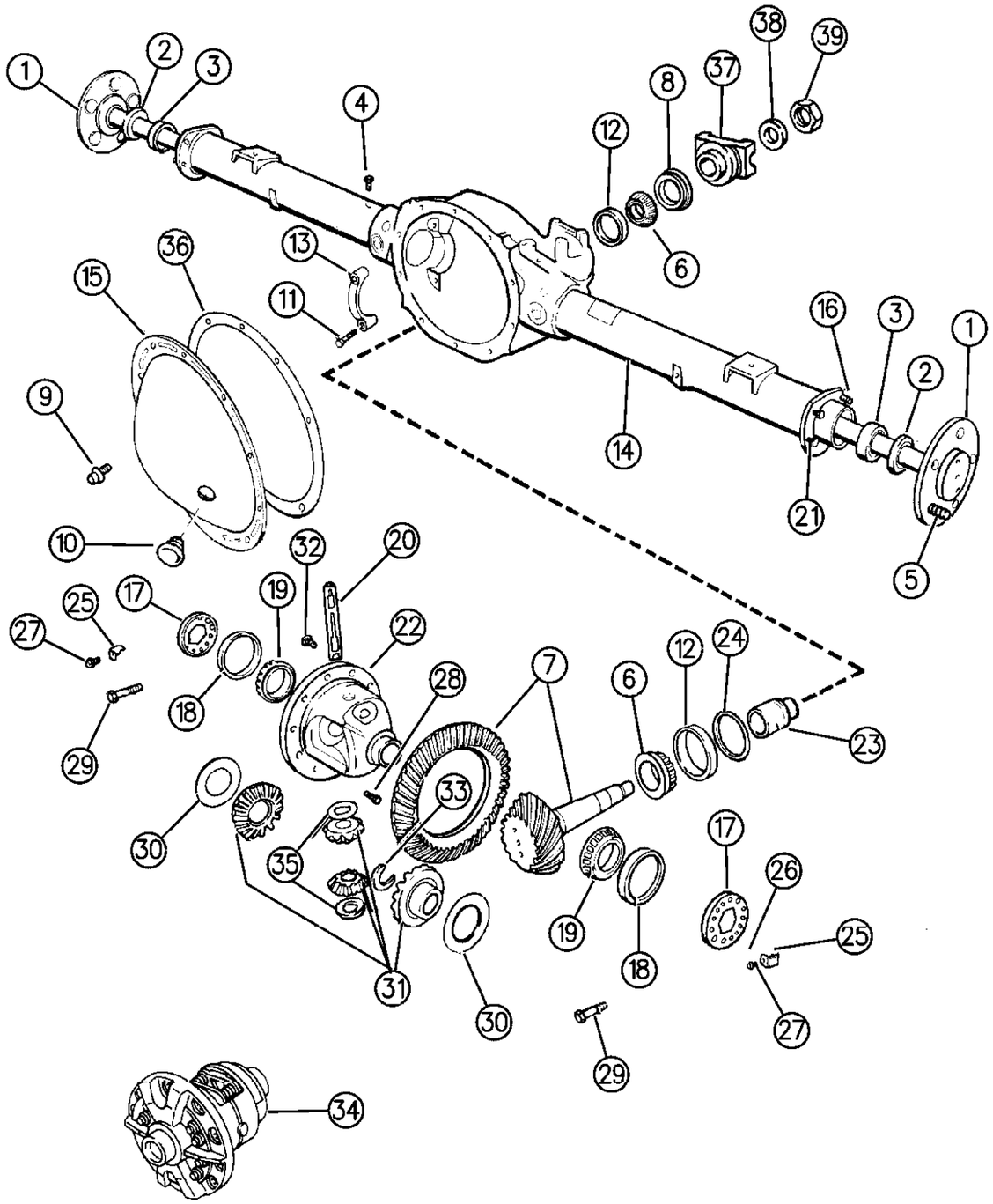

ITEM	PART NUMBER	QTY	BODY	MODEL	DESCRIPTION
	4720 973	1			4.10 Ratio
8	4338 655	1			SEAL, Oil Drive Pinion Front
9	6033 043	10			SCREW, Rear Axle Cover
10	3723 687	1			PLUG, Cover
11	3432 695	4			SCREW, Differential Bearing Cap
12					CUP, Drive Pinion Bearing
	2070 317	1			Outer
	2800 485	1			Inner
13		2			CAP, Serviced in Item #14
14					CARRIER, w/Tubes
	4720 815	1			1994-95
	4886 134AA	1			1996
15	4049 689	1			COVER and PLUG PACKAGE
16	3723 668	8			BOLT, Brake Support to Axle.
17	3507 876	2			ADJUSTER, Differential Bearing
18	3723 569	2			CUP, Rear Axle Differential Bearing
19	1790 541	2			CONE, Rear Axle Differential Bearing
20		1			SHAFT, Differential Pinion - Serviced in Item #31
21	0152 345	10			NUT
22					CASE, Differential w/o Anti-Spin
	4384 220	1			1994-95 w/27 Tooth Spline
	5209 8776	1			1996 w/ 29 Tooth Spline
23	3507 575	1			SPACER, Pinion Bearing Adjuster
24					SHIM, Drive Pinion Bearing
	2931 817	AR			Outer
					Inner
	3723 520	AR			.020
	3723 522	AR			.022
	3723 524	AR			.024
	3723 526	AR			.026
	3723 527	AR			.027
	3723 528	AR			.028
	3723 529	AR			.029
	3723 530	AR			.030
	3723 531	AR			.031
	3723 532	AR			.032
	3723 534	AR			.034
	3723 536	AR			.036
	3723 538	AR			.038
25	3723 859	2			LOCK, Differential Bearing Adjuster
26		2			WASHER, (Not Serviced)
27	6023 092	2			SCREW and WASHER, Differential Bearing Adjuster Lock

MODEL CODES:

72=2 DR Wagon
74=4 DR Wagon
77=Open Body 93" Whlbase
78=Open Body 103" Whlbase - Export
T=2WD
J,N=4WD
U=4WD (RHD)

BODY STYLES:

YJ=Wrangler (4X4) "S"
Weangler (4X4) SE
Wrangler (4X4) Sahara
Wrangler (4X4) Renegade
XJ=Cherokee SE
Cherokee Sport
Cherokee Country
ZJ=Grand Cherokee SE
Grand Cherokee Laredo
Grand Cherolee Limited
ZG=Grand Cherokee European
Y1=Wrangler
X1=Cherokee
Z1=Grand Cherokee
KDX=Vehicles

AR = Use as Required - = Non Illustrated Part P.A.R. = Paint as Required

AXLE ASSEMBLY, REAR CHRYSLER MODEL 8 1/4 CHEROKEE
Figure 3-120

3–120

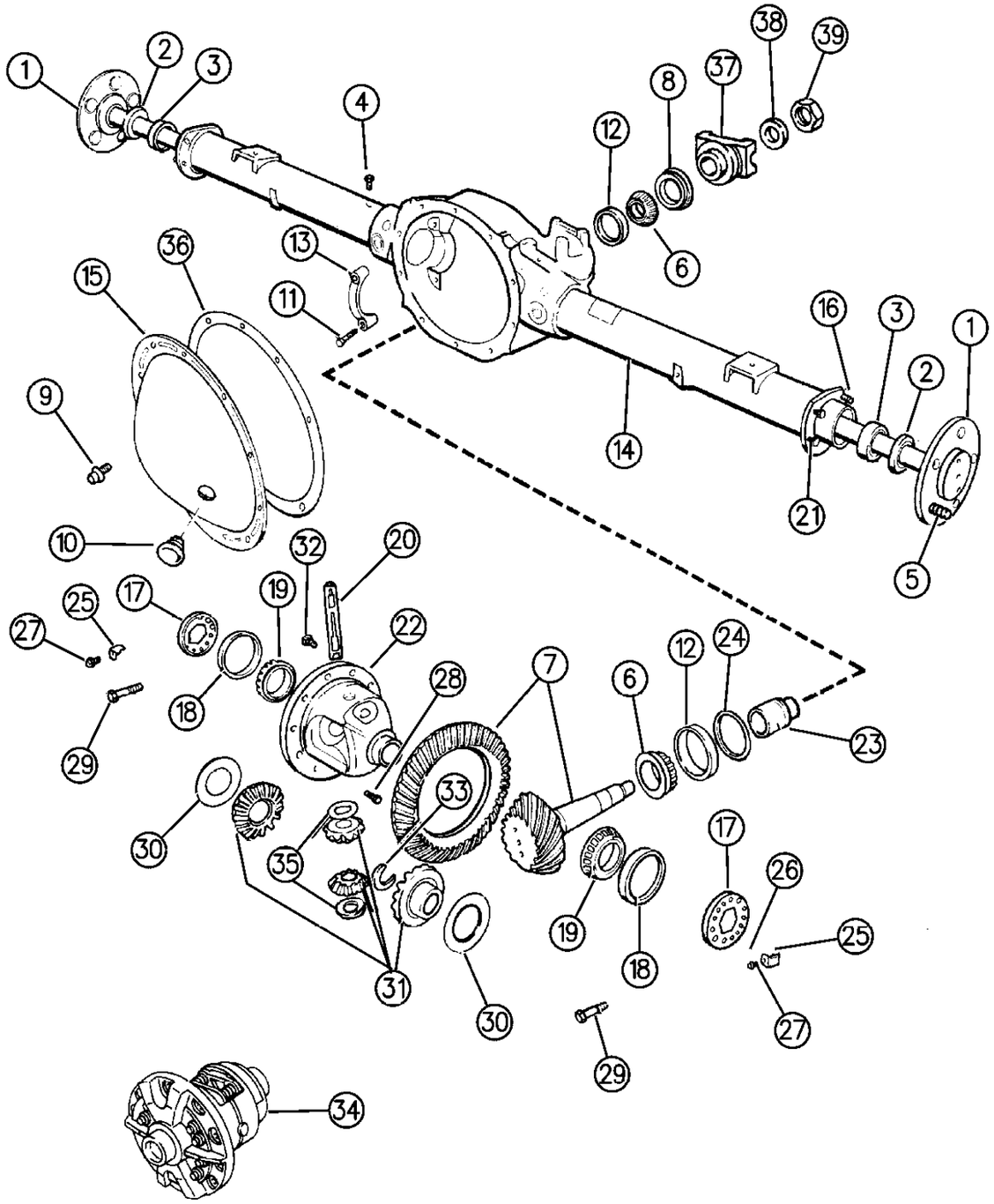

ITEM	PART NUMBER	QTY	BODY	MODEL	DESCRIPTION
28	3507 724	1			SCREW, Pinion Shaft Lock
29	3432 695	4			SCREW
30	4883 085	1			WASHER PACKAGE, Side Gear Thrust, Constists of 2 Each of: .031,.036,.041,.046
31					GEAR and PINION PACKAGE, Also Includes Items #20 &30
	4762 774	1			1994-95 w/27 Tooth Spline
	4883 087	1			1996 w/29 Tooth Spline
32	4443 158	1			SCREW PACKAGE, Axle Drive Gear
33	2852 883	2			LOCK, Drive Shaft
34					CASE, Differential w/Anti-Spin
	5206 8451	1			1994-95 w/27 Tooth Spline
	5209 8778	1			1996 w/29 Tooth Spline
35	2852 912	2			WASHER, Pinion Thrust, w/o Anti-Spin
36	4318 025	1			SEALER, Cover (Liquid)
37					YOKE, Drive Pinion
	5300 7787	1			w/2.75" Length
	5206 8839	1			w/3.00" Length
38	2070 117	1			WASHER, Pinion Nut
39	6028 041	1			NUT, Pinion

MODEL CODES:

72=2 DR Wagon
74=4 DR Wagon
77=Open Body 93" Whlbase
78=Open Body 103" Whlbase - Export
T=2WD
J,N=4WD
U=4WD (RHD)

BODY STYLES:

YJ=Wrangler (4X4) "S"
Weangler (4X4) SE
Wrangler (4X4) Sahara
Wrangler (4X4) Renegade
XJ=Cherokee SE
Cherokee Sport
Cherokee Country
ZJ=Grand Cherokee SE
Grand Cherokee Laredo
Grand Cherolee Limited
ZG=Grand Cherokee European
Y1=Wrangler
X1=Cherokee
Z1=Grand Cherokee
KDX=Vehicles

AR = Use as Required - = Non Illustrated Part P.A.R. = Paint as Required

AXLE ASSEMBLY, REAR DANA MODEL 35, DANA MODEL 44 CHEROKEE, GRAND CHEROKEE
Figure 3-130

3-130A

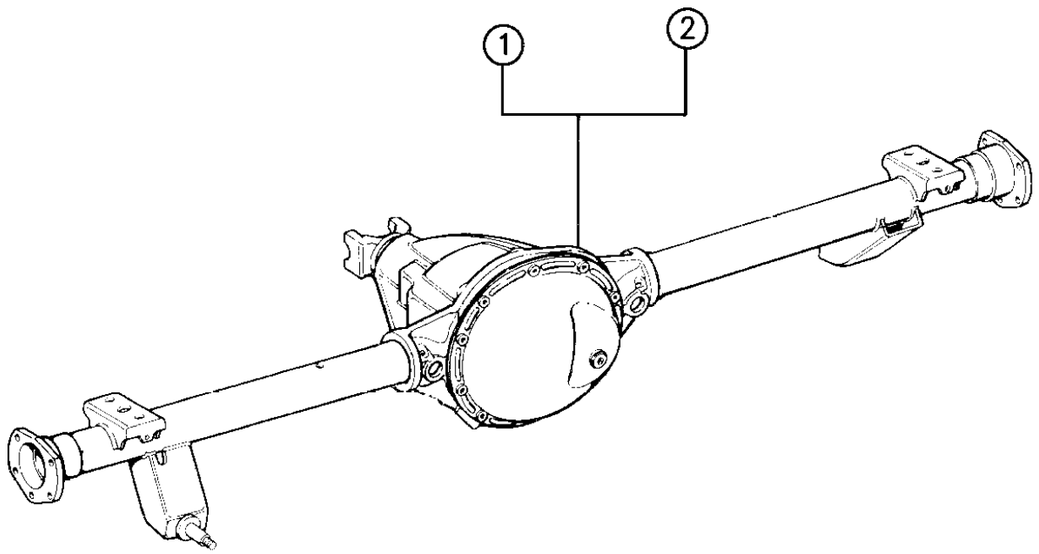

ITEM	PART NUMBER	QTY	BODY	MODEL	DESCRIPTION
1					AXLE ASSEMBLY w/o LOCKING DIFFERENTIAL ***
					DANA MODEL 35 (DRJ)
	4740 889	1	XJ		3.07 Ratio, Tagged 52068740 or 52068741
	4797 580	1	XJ		3.07 Ratio, Tagged 52069792, 52069793 (Up T0 3-1-96)
	4882 529	1	XJ,X1		3.07 Ratio, Tagged 52069798 (After 3-1-96)
	4762 698	1	XJ		3.55 Ratio, Tagged 52068265, 52068700, 52068721, 52068728, 52068744 or 52069551. 1994
	4797 553	1	XJ,X1		3.55 Ratio, Tagged 52069788, 52069790, 52069791, 52069796, 52098771, 52098773 1995-96
	4746 190	1	XJ		3.73 Ratio, Tagged 52008613
	4797 565	1	XJ		3.73 Ratio, Tagged 52069555, w/Synthtic Lube.
	4797 577	1	XJ		3.73 Ratio, Tagged 52069781
	4796 479	1	XJ		3.73 Ratio, w/VM Diesel Eng., Tagged 52068801
	4856 491	1	XJ,X1		3.73 Ratio, w/VM Diesel Eng., Tagged 52099434, 52098770
	5252 930	1	XJ		4.11 Ratio, Tagged 52068689
	4720 897	1	ZJ		3.55 Ratio, w/Rear Drum Brakes, Tagged 52069225 or 53007557
	4762 197	1	ZJ		3.55 Ratio, w/Rear Disc Brakes, Tagged 52068969 or 52069251
	4762 928	1	ZJ		3.55 Ratio, w/Rear Disc Brakes, Tagged 52069501
	4796 356	1	ZJ		3.55 Ratio, w/Rear Disc Brakes, Tagged 52069905 or 52069377 (Up To 1-4-96)
	4882 453	1	ZJ		3.55 Ratio, w/Rear Disc Brakes, Tagged 52098733 (After 1-4-96)
	4761 062	1	ZJ		3.73 Ratio, w/Rear Drum Brakes, Tagged 52069259 (Up To 8-9-93)
	4740 871	1	ZJ		3.73 Ratio, w/Rear Drum Brakes, Tagged 52068143 (After 8-9-93)
	4762 198	1	ZJ		3.73 Ratio, w/Rear Disc Brakes, Tagged 52068975 or 52069256
	4762 930	1	ZJ		3.73 Ratio, w/Rear Disc Brakes, Tagged 52069502
	4796 358	1	ZJ		3.73 Ratio, w/Rear Disc Brakes, Tagged 52069907 or 52069379 (Up To 1-4-96)
	4882 446	1	ZJ		3.73 Ratio, w/Rear Disc Brakes, Tagged 52098735 (After 1-4-96)
		1			***DANA MODEL 44 (DRK)***
	4856 361	1	ZJ		3.55 Ratio, Tagged 52070043
	4856 356	1	ZJ		3.73 Ratio, Tagged 52070044
2					AXLE ASSEMBLY w/LOCKING DIFFERENTIAL ***
					DANA MODEL 35 (DRJ)
	4740 891	1	XJ		3.07 Ratio, Tagged 52068679 or 52068742
	4797 576	1	XJ		3.07 Ratio, Tagged 52069785, 52069794 (Up To 3-1-96)

MODEL CODES:

72=2 DR Wagon
74=4 DR Wagon
77=Open Body 93" Whlbase
78=Open Body 103" Whlbase - Export
T=2WD
J,N=4WD
U=4WD (RHD)

BODY STYLES:

YJ=Wrangler (4X4) "S"
Weangler (4X4) SE
Wrangler (4X4) Sahara
Wrangler (4X4) Renegade
XJ=Cherokee SE
Cherokee Sport
Cherokee Country
ZJ=Grand Cherokee SE
Grand Cherokee Laredo
Grand Cherolee Limited
ZG=Grand Cherokee European
Y1=Wrangler
X1=Cherokee
Z1=Grand Cherokee
KDX=Vehicles

94J03 130A

AR = Use as Required - = Non Illustrated Part P.A.R. = Paint as Required

AXLE ASSEMBLY, REAR DANA MODEL 35, DANA MODEL 44 CHEROKEE, GRAND CHEROKEE
Figure 3-130

3-130A

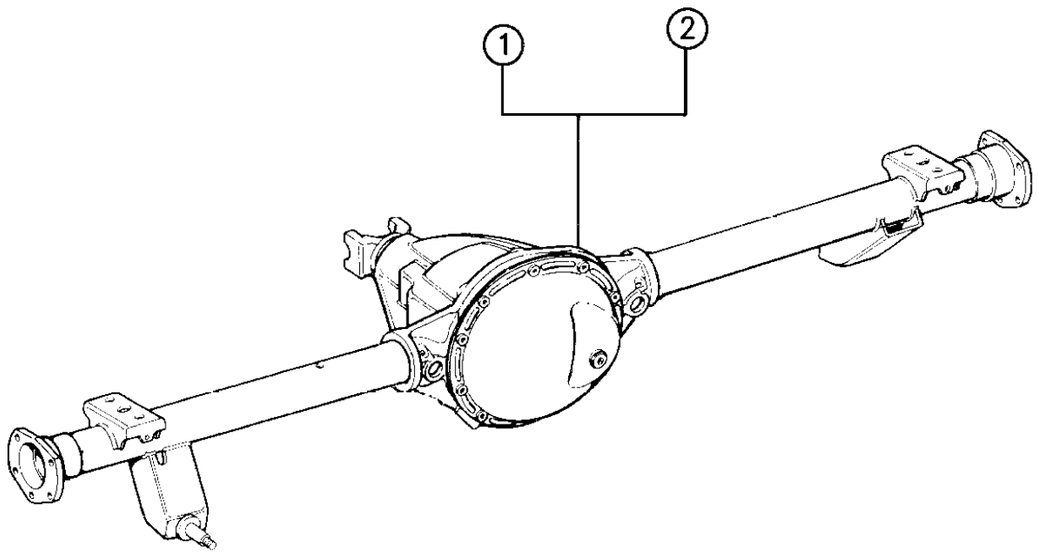

94J03 130A

ITEM	PART NUMBER	QTY	BODY	MODEL	DESCRIPTION
	4882 527	1	XJ,X1		3.07 Ratio, Tagged 52069799, 52069797 (After 3-1-96)
	5252 950	1	XJ		3.55 Ratio, Tagged 52068266, 52068675, 52068714, 52068743 or 52069552.
	4797 571	1	XJ,X1		3.55 Ratio, Tagged 52069782, 52069784, 52069789, 52069795, 52069552, 52098774, 52098775, 52098772, 52068714, 52068675 w/Synthetic Lube
	4746 191	1	XJ		3.73 Ratio, Tagged 52069614
	4797 569	1	XJ		3.73 Ratio, Tagged 52069780
	4797 555	1	XJ		3.73 Ratio, Tagged 52069554, 52069556, w/Synthetic Lube.
	4796 478	1	XJ		3.73 Ratio, w/VM Diesel, Tagged 52068802 or 52068804
	4798 093	1	XJ		3.73 Ratio, w/VM Diesel, Tagged 52099303, 52099304, 52098910, 52098911 (Up To 3-1-96)
	4882 560	1	XJ		3.73 Ratio, w/VM Diesel, Tagged 52098768, 52098769 (After 3-1-96)
	5252 931	1	XJ		4.11 Ratio, Tagged 52068688
	4797 575	1	XJ		4.11 Ratio, Tagged 52069787
	4797 579	1	XJ		4.11 Ratio, Tagged 52069786
	4882 566	1	XJ		4.11 Ratio, Tagged 52069800
	4761 061	1	ZJ		3.73 Ratio, w/Rear Drum Brakes, Tagged 52069277,52068144
	4740 872	1	ZJ		3.73 Ratio, w/Rear Drum Brakes, Tagged 52068142 or 52068144
	4762 199	1	ZJ		3.73 Ratio, w/Rear Disc Brakes, Tagged 52068976 and 52069258
	4762 929	1	ZJ		3.73 Ratio, w/Rear Disc Brakes, Tagged 52069503
	4796 362	1	ZJ,ZG		3.73 Ratio, w/Rear Disc Brakes, Tagged 52069906 or 52069378 (Up To 1-4-96)
	4882 451	1	ZJ,ZG		3.73 Ratio, w/Rear Disc Brakes, Tagged 52098734, (After 1-4-96)
	4856 510	1	ZG		3.73 Ratio, w/Rear Disc Brakes, Tagged 53054226 (RHD)
	4874 013	1	ZG		3.73 Ratio, w/Rear Disc Brakes, Tagged 53055072 (RHD)
	4882 616	1	ZG		3.73 Ratio, w/Rear Disc Brakes, Tagged 52098941 (RHD)
					DANA MODEL 44 (DRK)
	4856 410	1	ZJ		3.55 Ratio, Tagged 52070045
	4856 330	1	ZJ		3.73 Ratio, Tagged 52070046

MODEL CODES:

72=2 DR Wagon
74=4 DR Wagon
77=Open Body 93" Whlbase
78=Open Body 103" Whlbase - Export
T=2WD
J,N=4WD
U=4WD (RHD)

BODY STYLES:

YJ=Wrangler (4X4) "S"
Weangler (4X4) SE
Wrangler (4X4) Sahara
Wrangler (4X4) Renegade
XJ=Cherokee SE
Cherokee Sport
Cherokee Country
ZJ=Grand Cherokee SE
Grand Cherokee Laredo
Grand Cherolee Limited
ZG=Grand Cherokee European
Y1=Wrangler
X1=Cherokee
Z1=Grand Cherokee
KDX=Vehicles

AR = Use as Required - = Non Illustrated Part P.A.R. = Paint as Required

3–210A

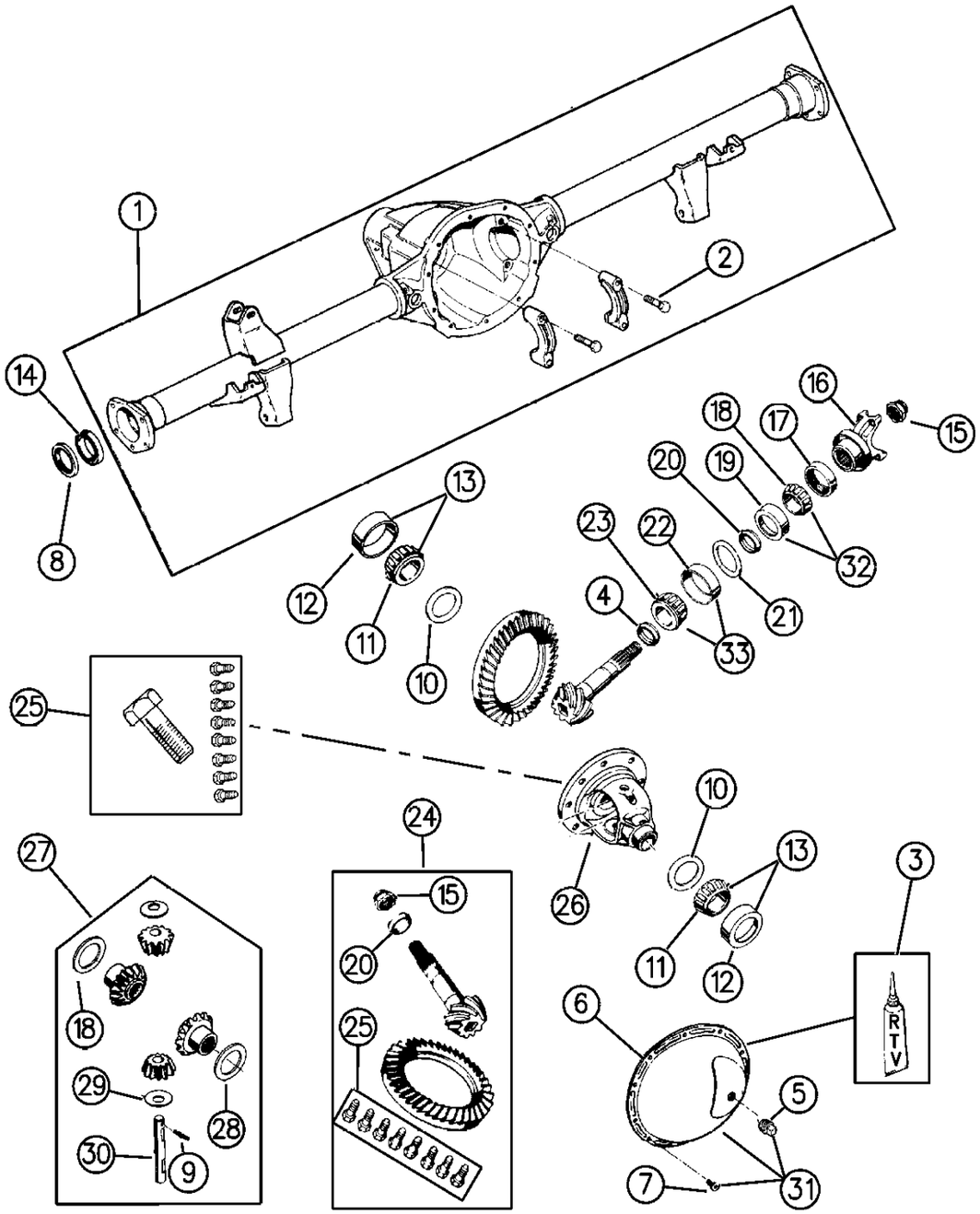

1	5252 519	1	HOUSING, Axle
2	J400 6553	4	BOLT
	4761 060	4	
3	4318 025	1	SEALER, (RTV)
4		1	SPACER, Serviced by Item #21.
5	5252 504	1	PLUG, Rubber
6			COVER (Serviced in Item #37) ***
7	J400 6708	10	BOLT
8	5252 499	2	SEAL, Rear Axle Dana Model 35
9	5252 502	1	PIN, Retaining
10	8350 3004	1	SHIM PACKAGE (16)
11	1937 771	2	CONE, Bearing
12	J317 1166	2	CUP, Bearing
13	J812 6500	1	BEARING PACKAGE, Differential Side ***
14	J813 4586	2	BEARING ASSEMBLY, Axle Shaft
15	4720 895	1	NUT, Pinion
16			YOKE, Pinion

HOUSING AND DIFFERENTIAL, REAR AXLE DANA MODEL 44 KDX W/O LOCKING DIFFERENTIAL WRANGLER (YJ)

Figure 3-230

3–230

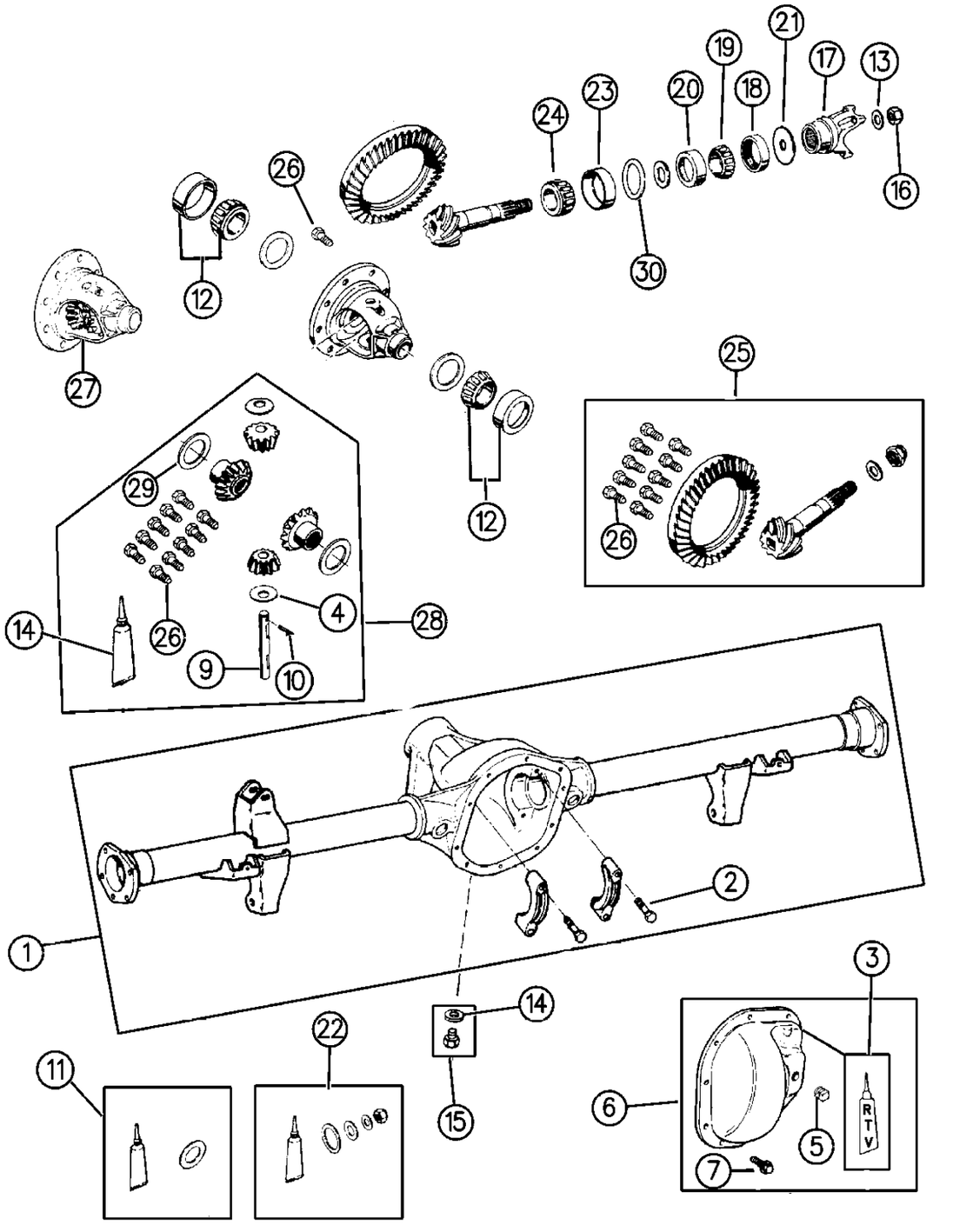

ITEM	PART NUMBER	QTY	BODY	MODEL	DESCRIPTION
1	8350 5407	1			HOUSING, Axle
2	8350 1515	4			BOLT
3	J899 3317	1			SEALER, Gasket-in-a-Tube RTV
4	J064 5790	2			WASHER, Pinion
5	8350 1571	1			PLUG
6	8350 3058	1			COVER
7	J400 6708	10			BOLT
8	J012 0361	1			NUT
9	8350 3069	1			SHAFT, Differential
10	J063 6360	1			PIN
11	J812 9222	1			SHIM PACKAGE
12	J812 4071	1			BEARING PACKAGE ***
13	J063 6570	1			WASHER
14	J899 3317	1			SEALER, Gasket-in-a-Tube
15	J812 1449	1			PLUG PACKAGE
16	J080 1367	1			NUT, Pinion
17					YOKE, Pinion
	8350 3388	1			(3.0" Long)
	4797 689	1			(3.7" Long)
18	8350 3390	1			SEAL, Pinion
19	J005 2878	1			CONE, Bearing
20	J005 2879	1			CUP, Bearing
21	J063 6566	1			SLINGER
22	J812 9221	1			SHIM PACKAGE
23	J005 2877	1			CUP, Bearing
24	J080 7266	1			CONE, Bearing
25	8350 3437	1			GEAR SET, Rear Axle Ring and Pinion w/3.54 Ratio
26	J064 9454	10			BOLT
27	8350 3073	1			CASE, Rear Axle Differential
28	8350 3068	1			GEAR SET, Rear Axle Differential
29	J080 5325	2			WASHER, Side
30	4626 721	1			SPACER, Pinion, Collapsible

MODEL CODES:

72=2 DR Wagon
74=4 DR Wagon
77=Open Body 93" Whlbase
78=Open Body 103" Whlbase - Export
T=2WD
J,N=4WD
U=4WD (RHD)

BODY STYLES:

YJ=Wrangler (4X4) "S"
Weangler (4X4) SE
Wrangler (4X4) Sahara
Wrangler (4X4) Renegade
XJ=Cherokee SE
Cherokee Sport
Cherokee Country
ZJ=Grand Cherokee SE
Grand Cherokee Laredo
Grand Cherolee Limited
ZG=Grand Cherokee European
Y1=Wrangler
X1=Cherokee
Z1=Grand Cherokee
KDX=Vehicles

AR = Use as Required - = Non Illustrated Part P.A.R. = Paint as Required

HOUSING AND DIFFERENTIAL, REAR AXLE DANA MODEL 44 KDX W/LOCKING DIFFERENTIAL WRANGLER, (YJ)

Figure 3-240

3-240B

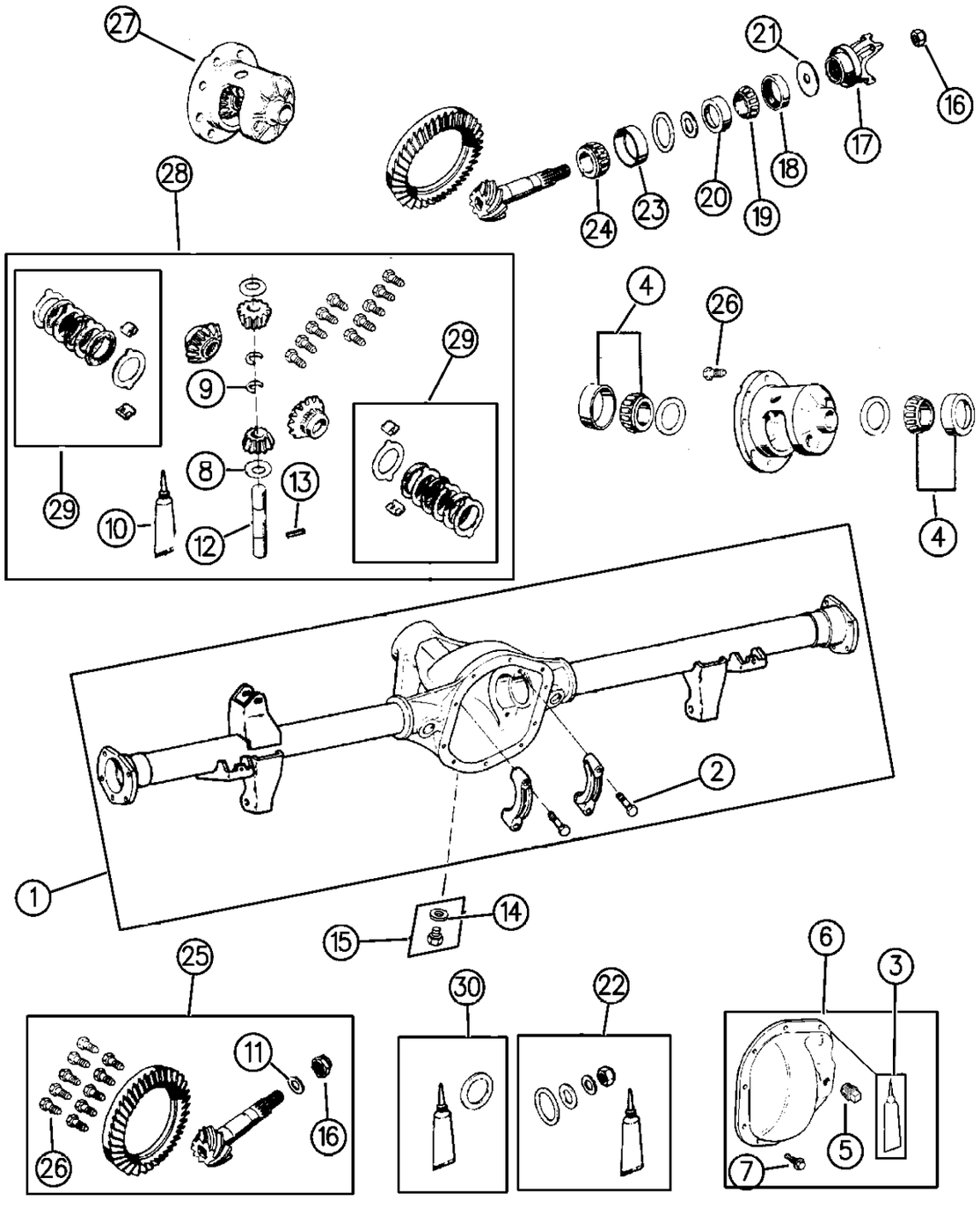

ITEM	PART NUMBER	QTY	BODY	MODEL	DESCRIPTION
1	8350 5407	1			HOUSING, Axle
2	8350 1515	4			BOLT
3	J899 3317	1			SEALER, Gasket-in-a-Tube
4	J812 4071	1			BEARING PACKAGE ***
5	8350 1571	1			PLUG
6	8350 3058	1			COVER
7	J099 1546	10			BOLT
8	J064 5790	2			WASHER, Pinion
9	8350 3070	2			RING, Snap
10	J899 3317	1			SEALER, Gasket-in-a-Tube
11	J063 6570	1			WASHER
12	8350 3069	1			SHAFT, Secured by roll pin
13	J063 6360	1			PIN, Cross Shaft Securing
14	J317 0271	1			GASKET
15	J812 1449	1			PLUG PACKAGE
16	J080 1367	1			NUT, Pinion
17					YOKE, Pinion
	8350 3388	1			(3.0" Long)
	4797 689	1			(3.7" Long)
18	8350 3390	1			SEAL, Pinion
19	J005 2878	1			CONE, Bearing
20	J005 2879	1			CUP, Bearing
21	J063 6566	1			SLINGER
22	J812 9221	1			SHIM PACKAGE
23	J005 2877	1			CUP, Bearing
24	J080 7266	1			CONE, Bearing
25					GEAR SET, Rear Axle Differential
	8350 3437	1			3.54 Ratio
	8350 3059	1			4.09 Ratio
26	J064 9454	10			BOLT
27					CASE, Rear Axle Differential
	8350 5431	1			3.54 Ratio
	4741 098	1			4.09 Ratio
28					GEAR SET, Rear Axle Differential
	J812 9220	1			Cross Shaft secured by two retaining rings
	8350 5432	1			Cross Shaft secured by a roll pin
29	J099 4345	1			DISC PACKAGE ***
30	J812 9222	1			SHIM PACKAGE

MODEL CODES:

72=2 DR Wagon
74=4 DR Wagon
77=Open Body 93" Whlbase
78=Open Body 103" Whlbase - Export
T=2WD
J,N=4WD
U=4WD (RHD)

BODY STYLES:

YJ=Wrangler (4X4) "S"
Weangler (4X4) SE
Wrangler (4X4) Sahara
Wrangler (4X4) Renegade
XJ=Cherokee SE
Cherokee Sport
Cherokee Country
ZJ=Grand Cherokee SE
Grand Cherokee Laredo
Grand Cherolee Limited
ZG=Grand Cherokee European
Y1=Wrangler
X1=Cherokee
Z1=Grand Cherokee
KDX=Vehicles

AR = Use as Required - = Non Illustrated Part P.A.R. = Paint as Required

« RETURN TO GROUP INDEX

HOUSING, REAR AXLE DANA MODEL 35 CHEROKEE, GRAND CHEROKEE
Figure 3-250

3-250B

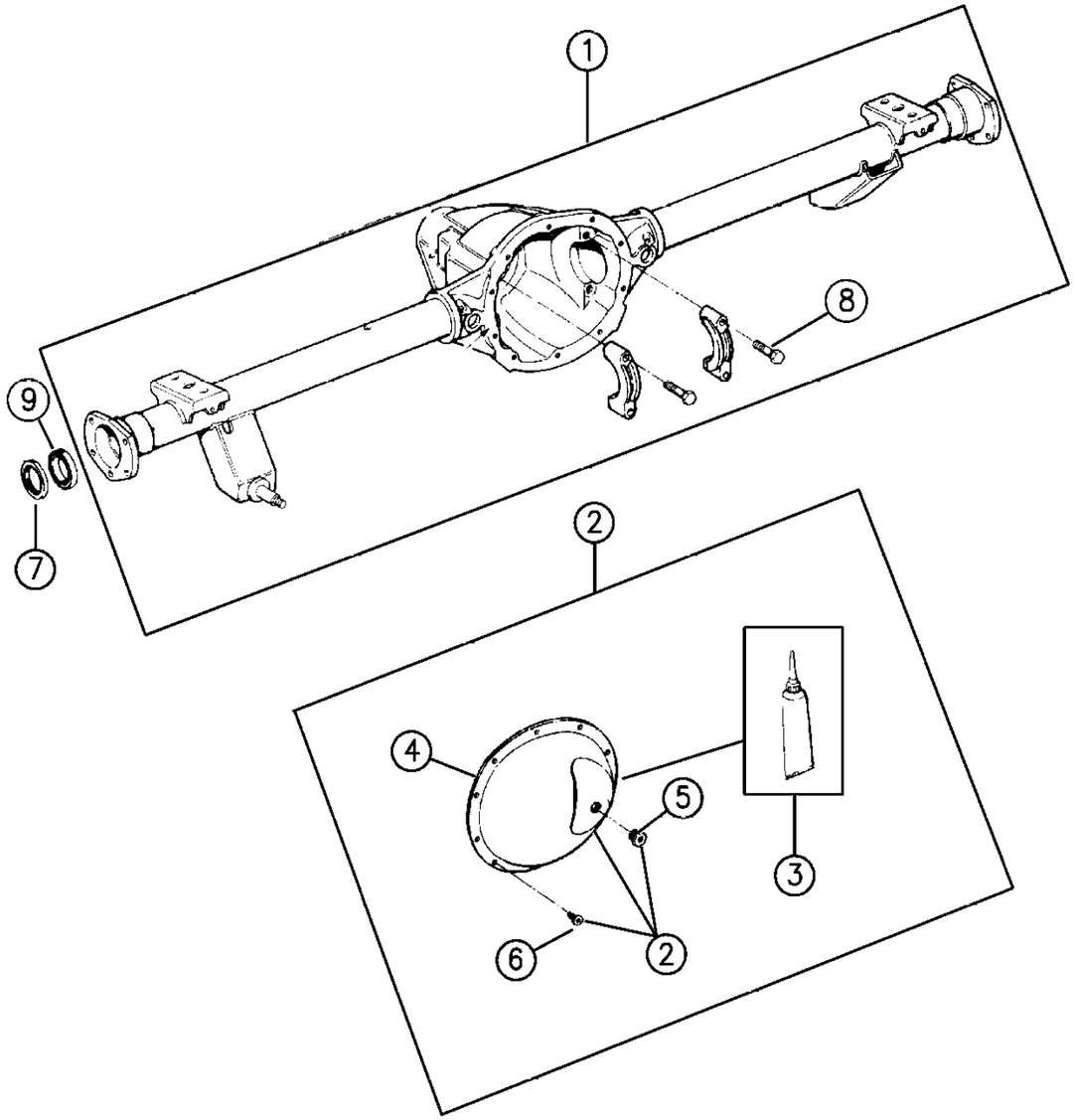

94J03 250

ITEM	PART NUMBER	QTY	BODY	MODEL	DESCRIPTION
1					HOUSING, Axle
	4636 168	1	XJ		
	4798 092	1	XJ		w/VM Diesel 1995-96
	4720 838	1	ZJ		w/Rear Drum Brakes
	4762 196	1	ZJ		w/Rear Disc Brakes 1994
	4796 357	1	ZJ		w/Rear Disc Brakes 1995-96, (Up To 1-4-96)
	4882 444	1	ZJ		w/Rear Disc Brakes 1996, (After 1-4-96)
	4882 444	1	ZG		LHD
	4856 508	1	ZG		RHD, w/Tag 53054226
	4874 012	1	ZG		RHD, w/Tag 53055072
	4882 615	1	ZG		RHD, w/Tag 52098941
2	5252 493	1			COVER PACKAGE
3	J899 3317	1			SEALER, Gasket-in-a-Tube
4					COVER (Serviced in Item #2) ***
5	5252 504	1			PLUG (Rubber) ***
6	J400 6708	10			BOLT
7	5252 499	2			SEAL
8	J400 6553	4			BOLT
9	J813 4586	2			BEARING ASSEMBLY, Axle Shaft

MODEL CODES:

72=2 DR Wagon
74=4 DR Wagon
77=Open Body 93" Whlbase
78=Open Body 103" Whlbase - Export
T=2WD
J,N=4WD
U=4WD (RHD)

BODY STYLES:

YJ=Wrangler (4X4) "S"
Weangler (4X4) SE
Wrangler (4X4) Sahara
Wrangler (4X4) Renegade
XJ=Cherokee SE
Cherokee Sport
Cherokee Country
ZJ=Grand Cherokee SE
Grand Cherokee Laredo
Grand Cherolee Limited
ZG=Grand Cherokee European
Y1=Wrangler
X1=Cherokee
Z1=Grand Cherokee
KDX=Vehicles

AR = Use as Required - = Non Illustrated Part P.A.R. = Paint as Required

HOUSING, REAR AXLE DANA MODEL 44 GRAND CHEROKEE
Figure 3-255

3–255

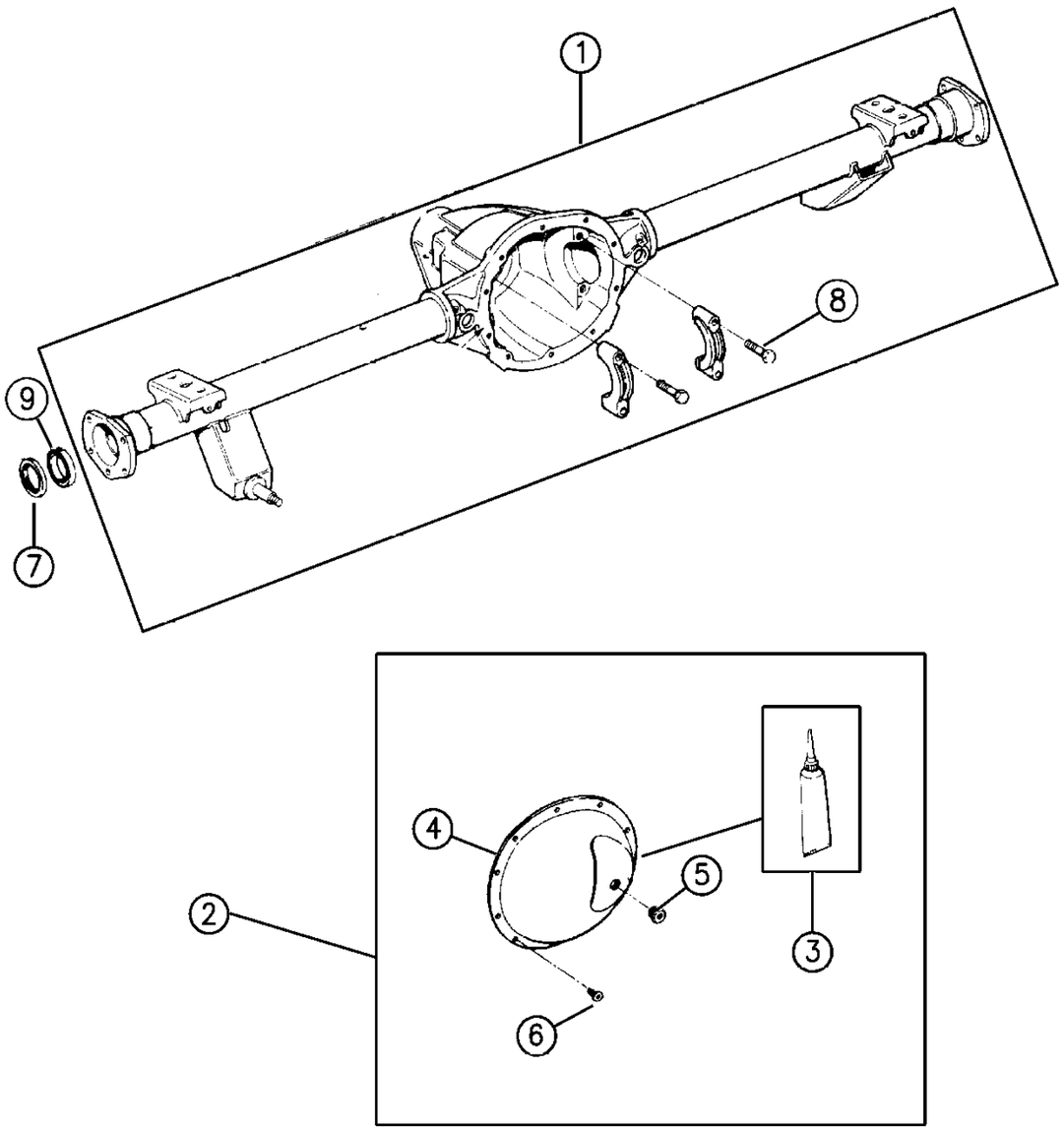

94J03 255

ITEM	PART NUMBER	QTY	BODY	MODEL	DESCRIPTION
1					HOUSING, Axle
	4856 329	1			
2	4856 347	1			COVER PACKAGE
3	4318 025	1			SEALER, Gasket-in-a-Tube
4					COVER (Serviced in Item #2) ***
5	5252 504	1			PLUG (Rubber) ***
6	J400 6708	10			BOLT
7	4856 336	2			SEAL
8	J400 6553	4			BOLT
9	8350 3064	2			BEARING ASSEMBLY, Axle Shaft 1995
	J813 4586	2			1996

MODEL CODES:

72=2 DR Wagon
74=4 DR Wagon
77=Open Body 93" Whlbase
78=Open Body 103" Whlbase - Export
T=2WD
J,N=4WD
U=4WD (RHD)

BODY STYLES:

YJ=Wrangler (4X4) "S"
Weangler (4X4) SE
Wrangler (4X4) Sahara
Wrangler (4X4) Renegade
XJ=Cherokee SE
Cherokee Sport
Cherokee Country
ZJ=Grand Cherokee SE
Grand Cherokee Laredo
Grand Cherolee Limited
ZG=Grand Cherokee European
Y1=Wrangler
X1=Cherokee
Z1=Grand Cherokee
KDX=Vehicles

AR = Use as Required - = Non Illustrated Part P.A.R. = Paint as Required

DIFFERENTIAL, NON-LOCKING DANA MODEL 35 (DRJ,DRM) CHEROKEE, GRAND CHEROKEE
Figure 3-260

3-260

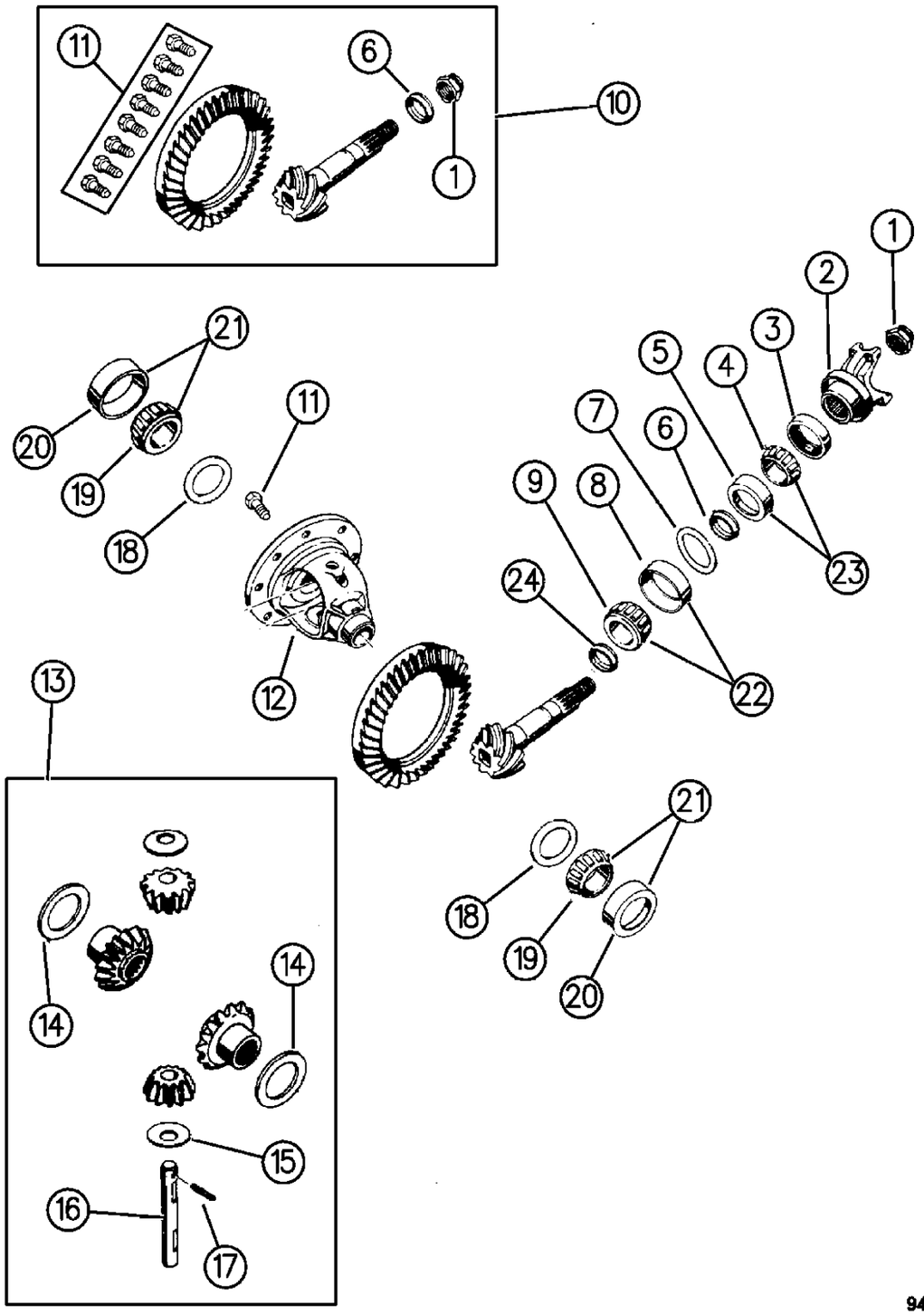

ITEM	PART NUMBER	QTY	BODY	MODEL	DESCRIPTION
1	J318 2601	1			NUT, Pinion
2					YOKE, Pinion
	4761 060	1			7290 ser (up to 2-15-95)
	8350 3318				1310 ser.
	4797 552	1			1310 ser.(after 2-15-95)
	4762 925	1			1310 ser. 1996
3	8350 4946	1			SEAL, Pinion
4	J315 6063	1			CONE, Bearing
5	J315 6062	1			CUP, Bearing
6	J317 5779	1			SPACER, Pinion
7					SHIM PACKAGE
	4720 922	1			Contains 10 Shims
8	J315 6065	1			CUP, Bearing
9	J317 0947	1			CONE, Bearing
10					GEAR SET
	8350 5472	1			3.07 Ratio
	4761 676	1			3.55 Ratio
	4740 873	1			3.73 Ratio
	8350 4938	1			4.11 Ratio
11	8350 4374	1			BOLT PACKAGE ***
12					CASE PACKAGE, Differential, Also IncludesItems #13, 18, 19 and 20. ***
	5252 510	1			3.07 Ratio, (w/Casting #42148)
	4740 833	1			3.07 Ratio, (w/Casting #44650)
	5252 517	1			3.55, 3.73, 4.11 Ratio,(w/Casting #41994, 43225,4013)
	4740 834	1			3.55, 3.73, 4.11 Ratio, (w/Casting #44591, 44648, 4292)
	4740 834	1	ZJ		3.55, 3.73 Ratio
13					GEAR SET, Differential
	4637 393	1			w/3.07 Ratio, w/o ABS, w/Casting #41994 or 42148) 1994
	4740 670	1			w/3.07 Ratio, w/ABS, (w/Casting #44591 or 44650) 1994
	4740 670	1			w/3.07 Ratio, (w/Casting #44591 or 44650) 1995
	4740 670	1			w/3.55, 3.73, 4.11 Ratio (w/Casting #44591 or 44650) 1994 - 95
14	J323 7817	2			WASHER, Side
	J812 0832	2	ZJ		
15	J323 7818	2			WASHER, Pinion
	J812 0831	2	ZJ		
16		1			SHAFT, Differential (Serv. in #13 Only)
17	5252 502	1			PIN, Retaining
18	8350 3004	1			SHIM PACKAGE (16)
19	1937 771	2			CONE, Bearing
20	J317 1166	2			CUP, Bearing

MODEL CODES:

72=2 DR Wagon
74=4 DR Wagon
77=Open Body 93" Whlbase
78=Open Body 103" Whlbase - Export
T=2WD
J,N=4WD
U=4WD (RHD)

BODY STYLES:

YJ=Wrangler (4X4) "S"
Weangler (4X4) SE
Wrangler (4X4) Sahara
Wrangler (4X4) Renegade
XJ=Cherokee SE
Cherokee Sport
Cherokee Country
ZJ=Grand Cherokee SE
Grand Cherokee Laredo
Grand Cherolee Limited
ZG=Grand Cherokee European
Y1=Wrangler
X1=Cherokee
Z1=Grand Cherokee
KDX=Vehicles

AR = Use as Required - = Non Illustrated Part P.A.R. = Paint as Required

DIFFERENTIAL, NON-LOCKING DANA MODEL 35 (DRJ,DRM) CHEROKEE, GRAND CHEROKEE
Figure 3-260

3–260

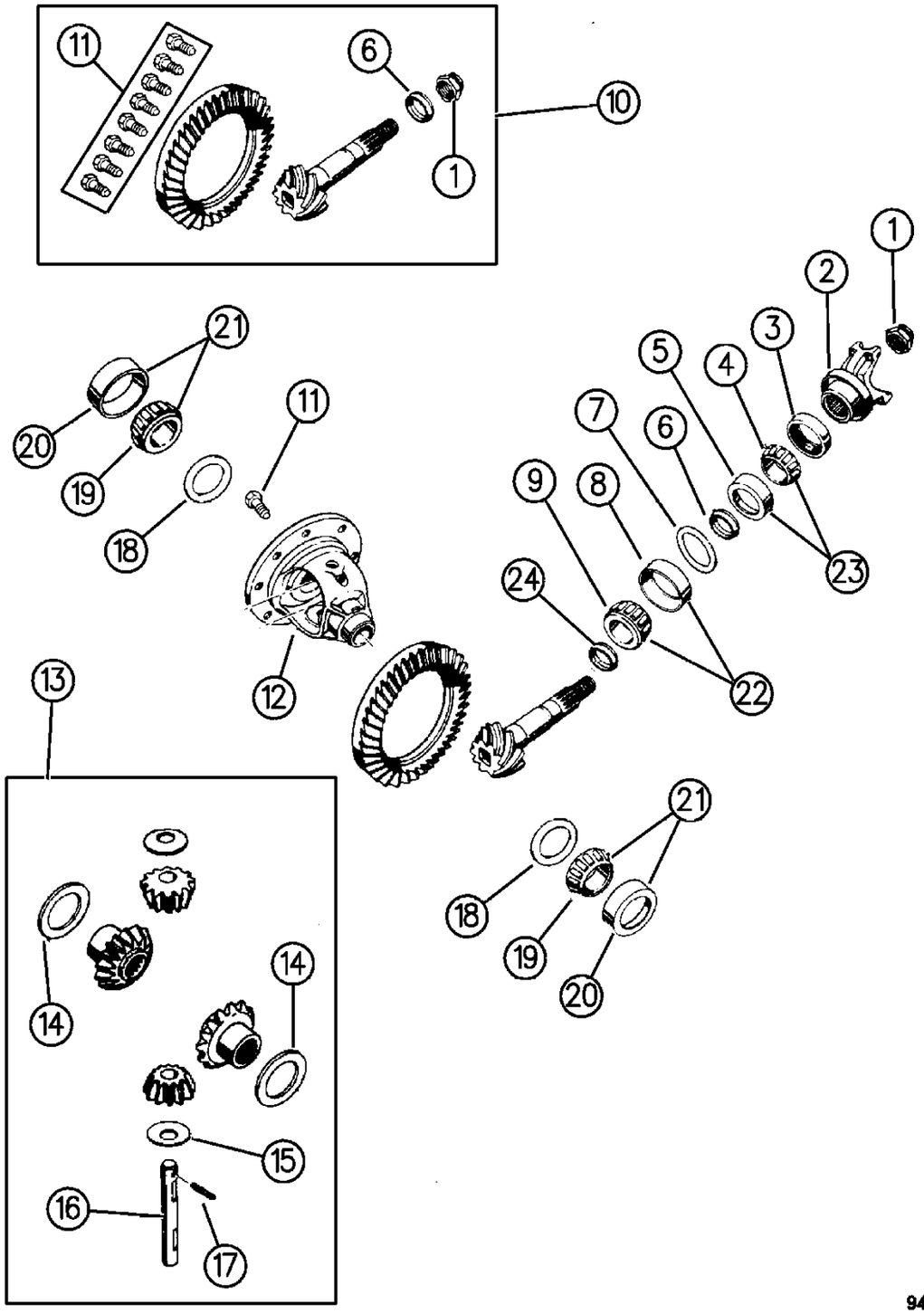

ITEM	PART NUMBER	QTY	BODY	MODEL	DESCRIPTION
21	J812 6500	1			BEARING PACKAGE, Differential Side ***
22	5252 507	1			BEARING PACKAGE, Pinion Inner ***
23	5252 508	1			BEARING PACKAGE, Pinion Outer ***
24		1			SPACER, Serviced by Item #7.

MODEL CODES:

72=2 DR Wagon
74=4 DR Wagon
77=Open Body 93" Whlbase
78=Open Body 103" Whlbase - Export
T=2WD
J,N=4WD
U=4WD (RHD)

BODY STYLES:

YJ=Wrangler (4X4) "S"
Weangler (4X4) SE
Wrangler (4X4) Sahara
Wrangler (4X4) Renegade
XJ=Cherokee SE
Cherokee Sport
Cherokee Country
ZJ=Grand Cherokee SE
Grand Cherokee Laredo
Grand Cherolee Limited
ZG=Grand Cherokee European
Y1=Wrangler
X1=Cherokee
Z1=Grand Cherokee
KDX=Vehicles

AR = Use as Required - = Non Illustrated Part P.A.R. = Paint as Required

DIFFERENTIAL, NON-LOCKING DANA MODEL 44 (DRK) GRAND CHEROKEE
Figure 3-265

3–265

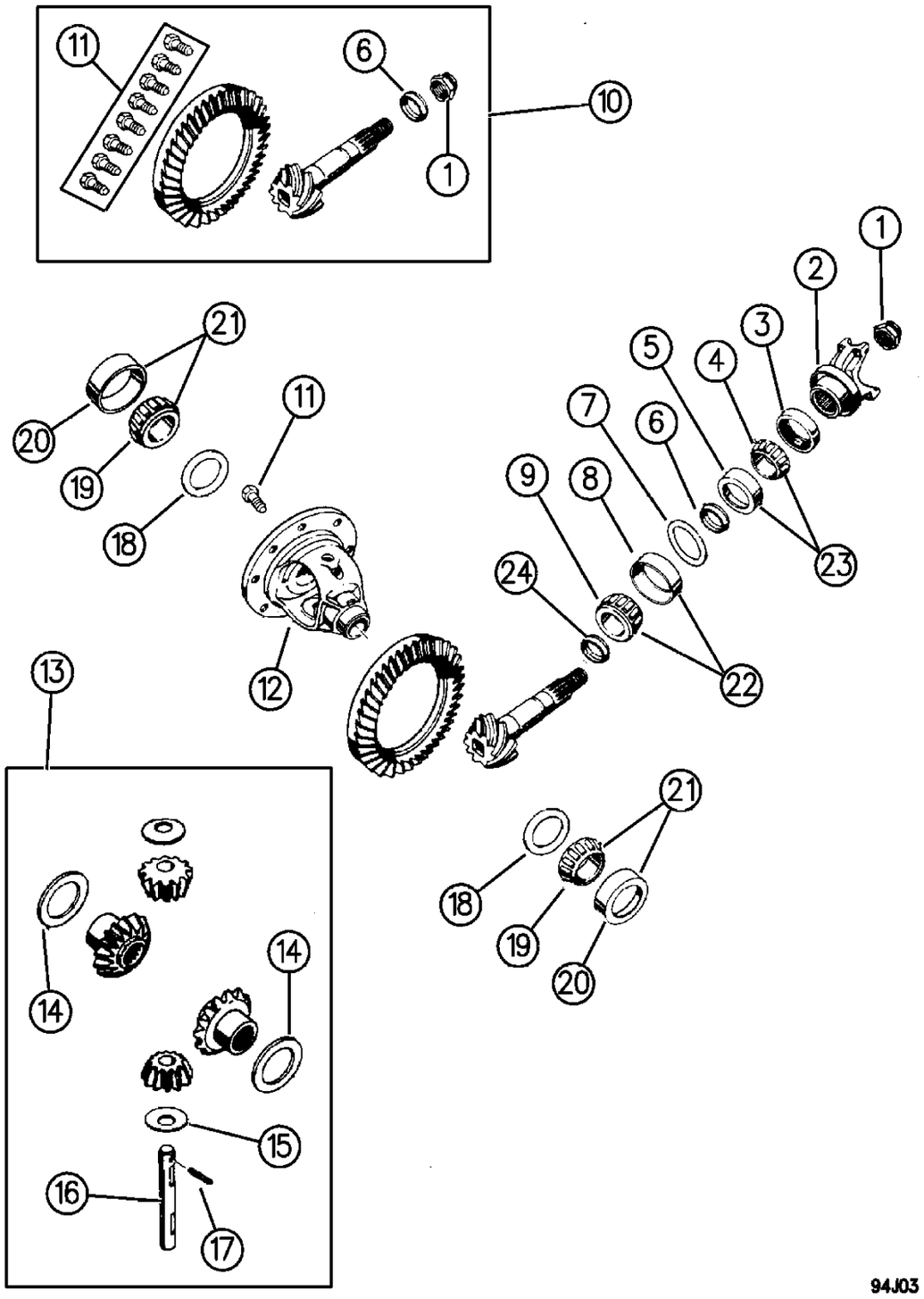

ITEM	PART NUMBER	QTY	BODY	MODEL	DESCRIPTION
1	1795 173	1			NUT, Pinion
-	1795 175	1			WASHER,Pinion
2	4856 345	1			YOKE, Pinion
3	4384 188	1			SEAL, Pinion
4		1			CONE,Front Pinion (Use Item 23)
5		1			CUP,Front Pinion (Use Item 23)
6	4864 214	1			SPACER,Crush
7					SHIM Kits,Pinion Shaft ***
	4856 368	AR			.035 To .039
	4856 369	AR			.040 To .044
	4856 370	AR			.045 To .049
	4856 371	AR			.050 To .054
8		1			CUP,Rear Pinion (Use Item 22)
9		1			CONE,Rear Pinion (Use Item 22)
10					GEAR KIT,Ring and Pinion ***
	4856 362	1			3.55 Ratio
	4856 346	1			3.73 Ratio
11	5252 503	10			Screw,Ring Gear Mounting ***
12					CASE,Differential,Includes Items 11,13,17,21
	4856 357	1			3.55, 3.73 Ratio
13	4856 366	1			GEAR KIT,Center Differential ***
14	3491 680	1			WASHER,Side Gear Thrust
15		2			WASHER, Pinion (Serv. in Item #13)
16		1			SHAFT, Differential (Serv. in Item #13)
17	5015 223AA	1			PIN,Differential Shaft
18					SHIM KIT,Differential ***
	5013 879AA	1			0.111"to 0.119"
	5013 880AA	1			0.121"to 0.125"
	5013 881AA	1			0.126"to 0.130"
	5013 882AA	1			0.131"to 0.135"
	5013 883AA	1			0.136"to 0.140"
	5013 884AA	1			0.141"to 0.145"
	5013 885AA	1			0.147"to 0.155"
19		2			CONE,Differential (Use Item 21)
20		2			CUP,Differential (Use Item 21)
21	4864 213	1			BEARING,Differential Case (Contains 2 Cups and 2 Cones
22	4746 979	1			BEARING PACKAGE, Pinion,Rear ***
23	4864 210	1			BEARING PACKAGE,Pinion,Front ***
24		1			SPACER,Crush (Use Item #6)

MODEL CODES:

72=2 DR Wagon
74=4 DR Wagon
77=Open Body 93" Whlbase
78=Open Body 103" Whlbase - Export
T=2WD
J,N=4WD
U=4WD (RHD)

BODY STYLES:

YJ=Wrangler (4X4) "S"
Weangler (4X4) SE
Wrangler (4X4) Sahara
Wrangler (4X4) Renegade
XJ=Cherokee SE
Cherokee Sport
Cherokee Country
ZJ=Grand Cherokee SE
Grand Cherokee Laredo
Grand Cherolee Limited
ZG=Grand Cherokee European
Y1=Wrangler
X1=Cherokee
Z1=Grand Cherokee
KDX=Vehicles

AR = Use as Required - = Non Illustrated Part P.A.R. = Paint as Required

« RETURN TO GROUP INDEX

DIFFERENTIAL, LOCKING DANA MODEL 35 CHEROKEE, GRAND CHEROKEE
Figure 3-270

3–270

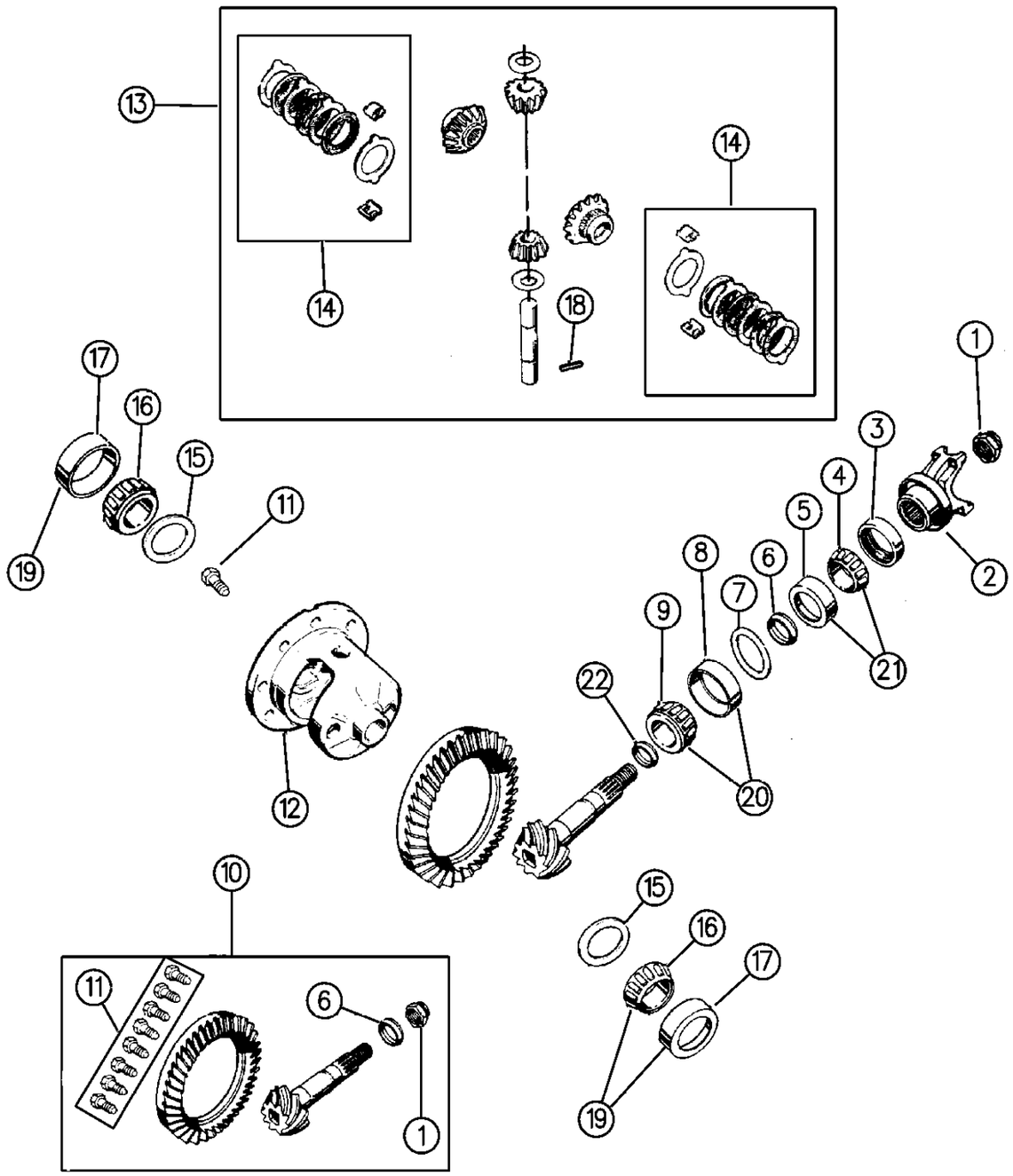

94J03 270

ITEM	PART NUMBER	QTY	BODY	MODEL	DESCRIPTION
1	J318 2601	1			NUT, Pinion
2		1			YOKE, Pinion
	8350 3318	1		XJ	
	4797 552	1		XJ	w/VM Diesel 1995-96
	8350 3318	1		ZJ	w/Rear Drum Brakes
	4761 060	1		ZJ	w/7290 Series Yoke(2 5/8"I.D.), w/Rear Disc Brakes
	4762 925	1		ZJ	w/1310 Series Yoke(2.97 O.D.), w/Rear Disc Brakes
3	8350 4946	1			SEAL, Pinion
4	J315 6063	1			CONE, Bearing
5	J315 6062	1			CUP, Bearing
6	J317 5779	1			SPACER, Pinion
7	8350 3003	1			SHIM PACKAGE
8	J315 6065	1			CUP, Bearing
9	J317 0947	1			CONE, Bearing
10					GEAR SET, Ring and Pinion
	8350 5472	1			3.07 Ratio
	4761 676	1			3.55 Ratio
	4761 678	1			3.73 Ratio
	8350 4938	1			4.11 Ratio
11	8350 4374	1			BOLT PACKAGE ***
12					CASE PACKAGE, Differential, Also Includes Items #1 2,13,15,16 and 17. ***
	5252 512	1			3.07 Ratio
	5252 496	1			3.55, 3.73, 4.11 Ratio
13	4773 010	1			GEAR SET, Differential
14	5252 506	1			DISC PACKAGE, Differential ***
15	8350 3004	1			SHIM PACKAGE (16)
16	1937 771	2			CONE, Bearing
17	J317 1166	2			CUP, Bearing
18	5252 502	1			PIN, Retaining
19	J812 6500	1			BEARING PACKAGE, Differential Side ***
20	5252 507	1			BEARING PACKAGE, Pinion Inner ***
21	5252 508	1			BEARING PACKAGE, Pinion Outer ***
22		1			SPACER, Serviced by Item #7.

MODEL CODES:

72=2 DR Wagon
74=4 DR Wagon
77=Open Body 93" Whlbase
78=Open Body 103" Whlbase - Export
T=2WD
J,N=4WD
U=4WD (RHD)

BODY STYLES:

YJ=Wrangler (4X4) "S"
Weangler (4X4) SE
Wrangler (4X4) Sahara
Wrangler (4X4) Renegade
XJ=Cherokee SE
Cherokee Sport
Cherokee Country
ZJ=Grand Cherokee SE
Grand Cherokee Laredo
Grand Cherolee Limited
ZG=Grand Cherokee European
Y1=Wrangler
X1=Cherokee
Z1=Grand Cherokee
KDX=Vehicles

AR = Use as Required - = Non Illustrated Part P.A.R. = Paint as Required

DIFFERENTIAL, LOCKING DANA MODEL 44 (DRK) GRAND CHEROKEE
Figure 3-275

3–275

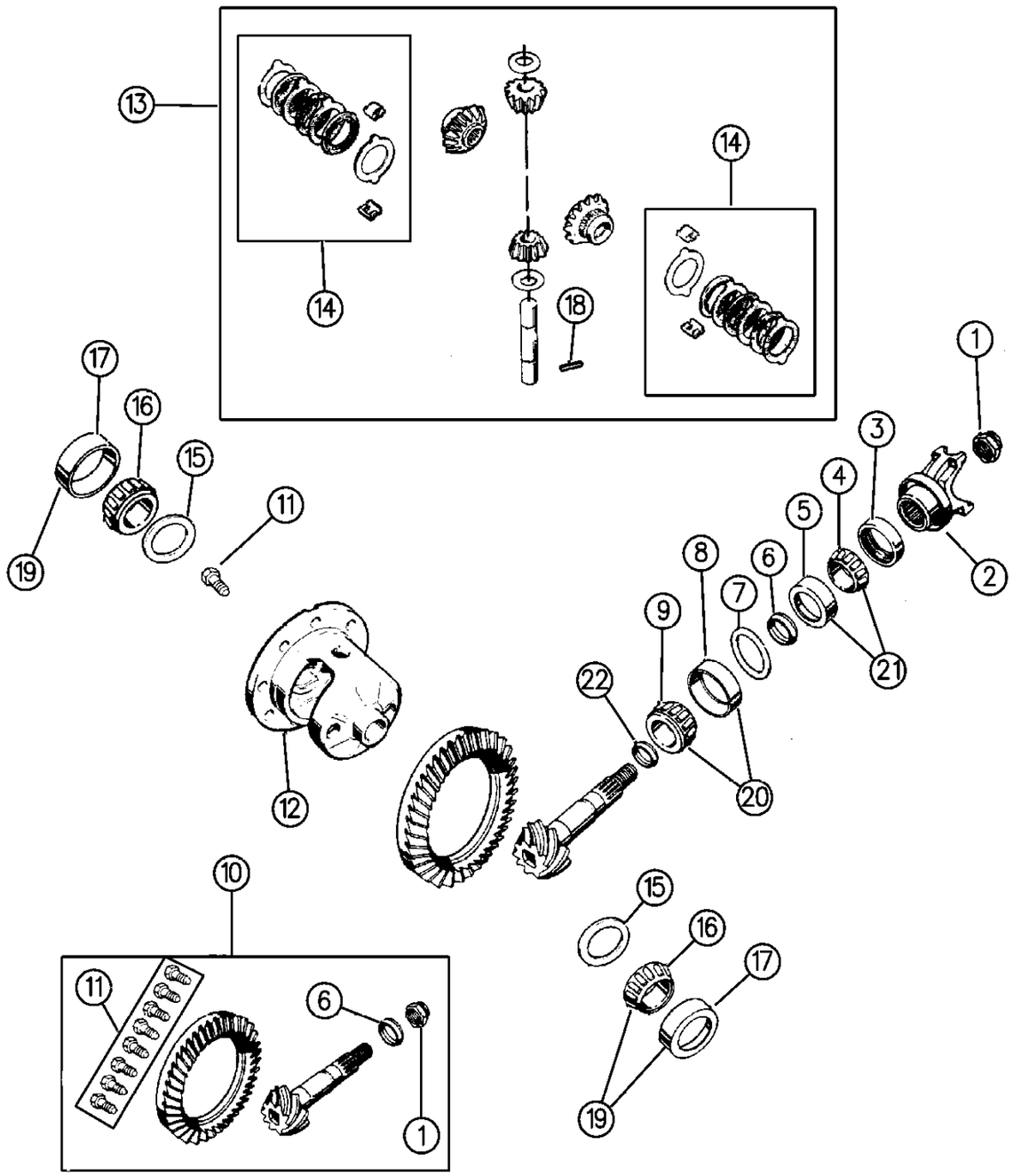

ITEM	PART NUMBER	QTY	BODY	MODEL	DESCRIPTION
1	1795 173	1			NUT, Pinion
-	1795 173	1			WASHER,Pinion
2	4856 345	1			YOKE, Pinion
3	4384 188	1			SEAL, Pinion
4		1			CONE,Front Pinion (Use item 21)
5		1			CUP,Front Pinion (Use Item 21)
6	4864 214	1			SPACER,Crush
7					SHIM Kit,Pinion Shaft ***
	4856 368	AR			.035 To .039
	4856 369	AR			.040 To .044
	4856 370	AR			.045 To .049
	4856 371	AR			.050 To .054
8		1			CUP,Rear Pinion (Use Item 20)
9		1			CONE,Rear Pinion (Use Item 20)
10					GEAR Kit,Ring and Pinion ***
	4856 346	1			3.73 Ratio
11	5252 503	10			SCREW,Ring Gear Mounting
12					CASE,Differential,Includes Items 13,14,18,19
	4856 355	1			3.55, 3.73 Ratio
13	4856 372	1			GEAR KIT,Center Differential ***
14	4856 373	1			DISC AND PLATE KIT,Differential ***
15					SHIM KIT,Differential ***
	5013 879AA	1			0.111"to 0.119"
	5013 880AA	1			0.121"to 0.125"
	5013 881AA	1			0.126"to 0.130"
	5013 882AA	1			0.131"to 0.135"
	5013 883AA	1			0.136"to 0.140"
	5013 884AA	1			0.141"to 0.145"
	5013 885AA	1			0.147"to 0.155"
16		2			CONE,Differential (Use Item 19)
17		2			CUP,Differential (Use Item 19)
18	5015 223AA	1			PIN,Differential Shaft
19	4864 213	1			BEARING Differential Case (Contains 2 Cups and 2 Cones ***
20	4746 979	1			BEARING PACKAGE, Pinion Rear ***
21	4864 210	1			BEARING PACKAGE, Pinion Front ***
22		1			SPACER,Crush (Use Item 6)

MODEL CODES:

72=2 DR Wagon
74=4 DR Wagon
77=Open Body 93" Whlbase
78=Open Body 103" Whlbase - Export
T=2WD
J,N=4WD
U=4WD (RHD)

BODY STYLES:

YJ=Wrangler (4X4) "S"
Weangler (4X4) SE
Wrangler (4X4) Sahara
Wrangler (4X4) Renegade
XJ=Cherokee SE
Cherokee Sport
Cherokee Country
ZJ=Grand Cherokee SE
Grand Cherokee Laredo
Grand Cherolee Limited
ZG=Grand Cherokee European
Y1=Wrangler
X1=Cherokee
Z1=Grand Cherokee
KDX=Vehicles

AR = Use as Required - = Non Illustrated Part P.A.R. = Paint as Required

VENT, AXLE
Figure 3-305

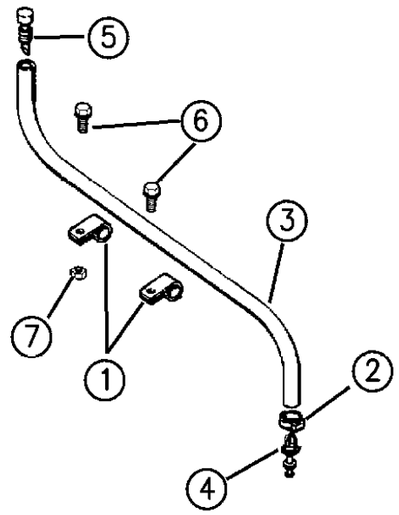

94J03 305

ITEM	PART NUMBER	QTY	BODY	MODEL	DESCRIPTION
1	J014 0780	2			CLIP
2	J322 7851	1			CLAMP
3	4443 176	1			HOSE, 5/16" I.D. x 25' Roll Stock
4	5206 7508	1			VENT,Lower
5	J318 7999	1			BREATHER,Axle Vent Upper
6	J400 5063	2			SCREW
7	J012 0361	2			NUT

MODEL CODES:

72=2 DR Wagon
74=4 DR Wagon
77=Open Body 93" Whlbase
78=Open Body 103" Whlbase - Export
T=2WD
J,N=4WD
U=4WD (RHD)

BODY STYLES:

YJ=Wrangler (4X4) "S"
Weangler (4X4) SE
Wrangler (4X4) Sahara
Wrangler (4X4) Renegade
XJ=Cherokee SE
Cherokee Sport
Cherokee Country
ZJ=Grand Cherokee SE
Grand Cherokee Laredo
Grand Cherolee Limited
ZG=Grand Cherokee European
Y1=Wrangler
X1=Cherokee
Z1=Grand Cherokee
KDX=Vehicles

AR = Use as Required - = Non Illustrated Part P.A.R. = Paint as Required

SHAFT, REAR AXLE DANA MODEL 35 WRANGLER, (YJ)
Figure 3-410

3-410

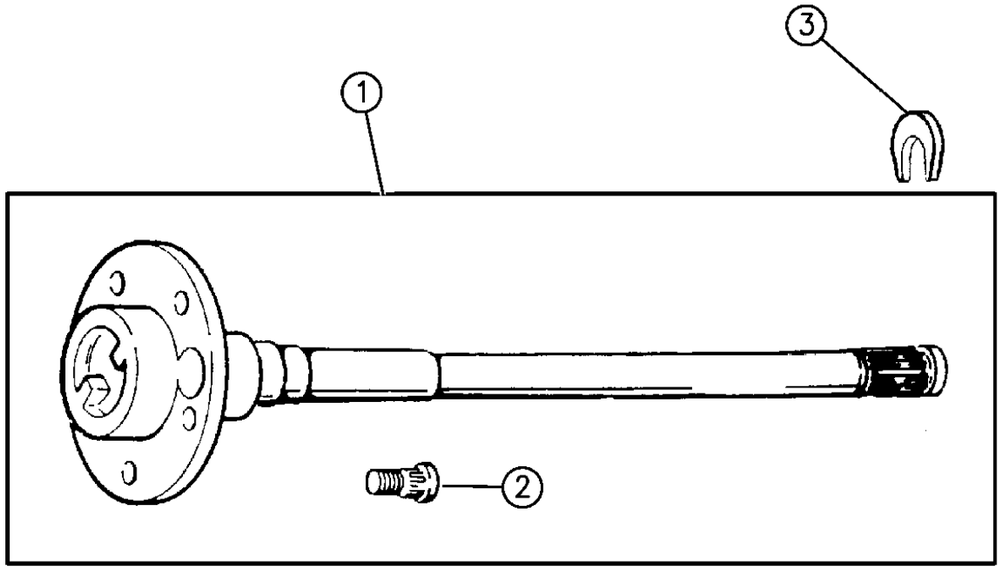

94J03 410

ITEM	PART NUMBER	QTY	BODY	MODEL	DESCRIPTION
1	4713 192-3	1			SHAFT, Axle
2	8350 3053	10			STUD, Wheel
3	5252 505	2			RETAINER, Axle Shaft

MODEL CODES:

72=2 DR Wagon
74=4 DR Wagon
77=Open Body 93" Whlbase
78=Open Body 103" Whlbase - Export
T=2WD
J,N=4WD
U=4WD (RHD)

BODY STYLES:

YJ=Wrangler (4X4) "S"
Weangler (4X4) SE
Wrangler (4X4) Sahara
Wrangler (4X4) Renegade

XJ=Cherokee SE
Cherokee Sport
Cherokee Country

ZJ=Grand Cherokee SE
Grand Cherokee Laredo
Grand Cherolee Limited
ZG=Grand Cherokee European

Y1=Wrangler
X1=Cherokee
Z1=Grand Cherokee
KDX=Vehicles

AR = Use as Required - = Non Illustrated Part P.A.R. = Paint as Required

SHAFT, REAR AXLE DANA MODEL 44 KDX WRANGLER, (YJ)
Figure 3-420

ITEM	PART NUMBER	QTY	BODY	MODEL	DESCRIPTION
1					SHAFT, Axle
	8350 4960	1			Right
	8350 4961	1			Left
2	8350 3053	10			STUD, Wheel
3	8350 4190	2			RETAINER
4	8350 3063	2			SEAL
5	8350 3064	2			BEARING
6	8350 3077	2			RING, Retaining

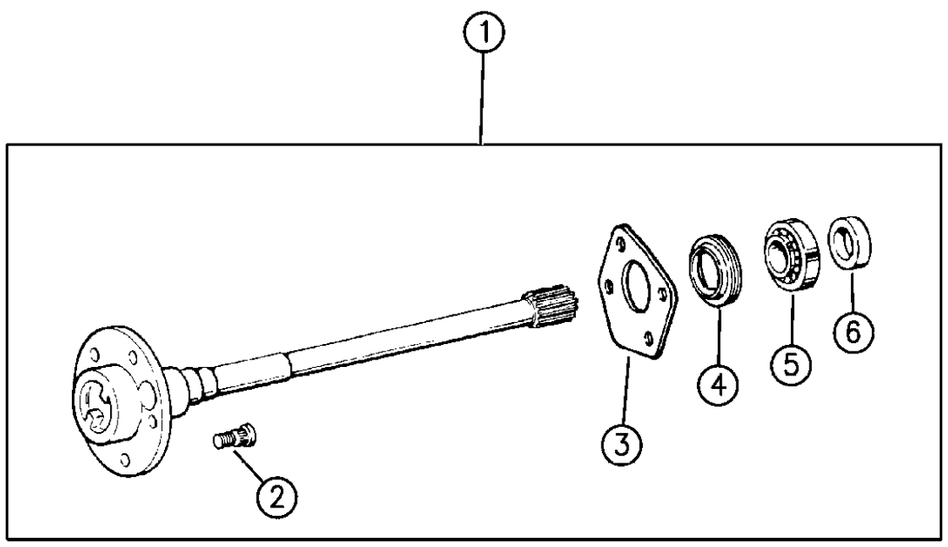

94J03 420

MODEL CODES:

72=2 DR Wagon
74=4 DR Wagon
77=Open Body 93" Whlbase
78=Open Body 103" Whlbase - Export
T=2WD
J,N=4WD
U=4WD (RHD)

BODY STYLES:

YJ=Wrangler (4X4) "S"
Weangler (4X4) SE
Wrangler (4X4) Sahara
Wrangler (4X4) Renegade
XJ=Cherokee SE
Cherokee Sport
Cherokee Country
ZJ=Grand Cherokee SE
Grand Cherokee Laredo
Grand Cherolee Limited
ZG=Grand Cherokee European
Y1=Wrangler
X1=Cherokee
Z1=Grand Cherokee
KDX=Vehicles

AR = Use as Required - = Non Illustrated Part P.A.R. = Paint as Required

SHAFT, REAR AXLE DANA MODEL 35 CHEROKEE, GRAND CHEROKEE
Figure 3-430

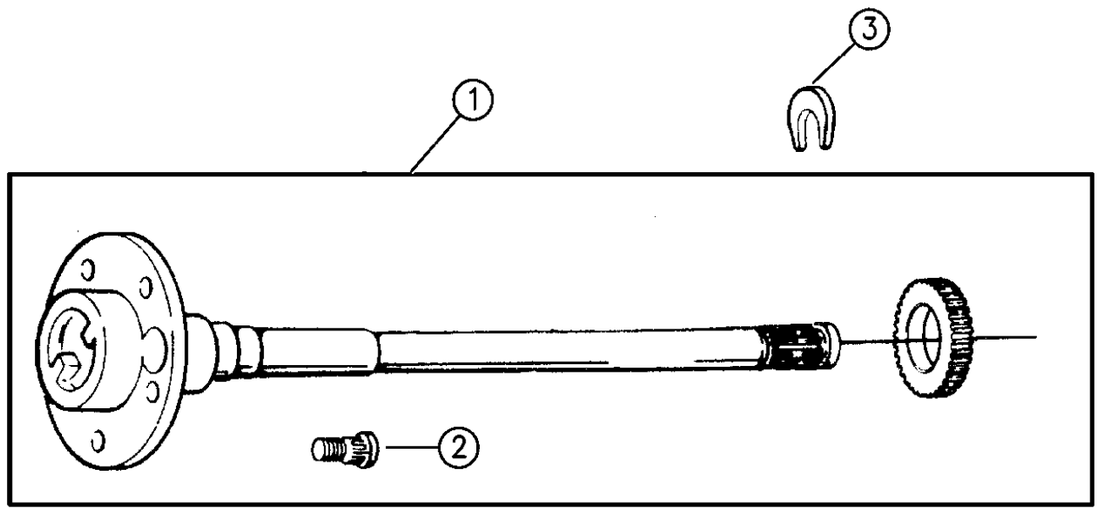

94J03 430

ITEM	PART NUMBER	QTY	BODY	MODEL	DESCRIPTION
1					SHAFT, Axle
	4713 192-3	1			w/Rear Drum Brakes
	4762 194-5	1			w/Rear Disc Brakes
2					STUD, Wheel
	8350 3053	10			w/Drum Brakes
	4762 841	10			w/Disc Brakes
3	5252 505	2			RETAINER, Axle Shaft

MODEL CODES:

72=2 DR Wagon
74=4 DR Wagon
77=Open Body 93" Whlbase
78=Open Body 103" Whlbase - Export
T=2WD
J,N=4WD
U=4WD (RHD)

BODY STYLES:

YJ=Wrangler (4X4) "S"
Weangler (4X4) SE
Wrangler (4X4) Sahara
Wrangler (4X4) Renegade

XJ=Cherokee SE
Cherokee Sport
Cherokee Country

ZJ=Grand Cherokee SE
Grand Cherokee Laredo
Grand Cherolee Limited
ZG=Grand Cherokee European

Y1=Wrangler
X1=Cherokee
Z1=Grand Cherokee
KDX=Vehicles

AR = Use as Required - = Non Illustrated Part P.A.R. = Paint as Required

SHAFT, REAR AXLE DANA MODEL 44 GRAND CHEROKEE
Figure 3-440

3-440A

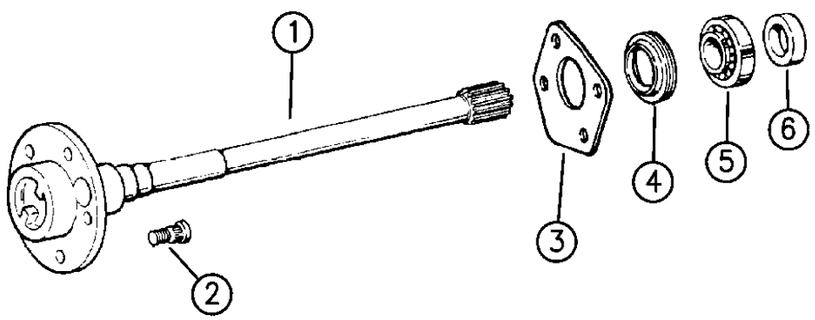

94J03 440A

ITEM	PART NUMBER	QTY	BODY	MODEL	DESCRIPTION
1	4856 332-3				SHAFT, Axle
2	4762 841	10			STUD, Wheel
3	4856 344	2			RETAINER, Axle
4	4856 336	2			SEAL, Axle
5	J813 4586	2			BEARING, Axle Rear
6	8350 3077	2			RING, Collar Rear Axle

MODEL CODES:

72=2 DR Wagon
74=4 DR Wagon
77=Open Body 93" Whlbase
78=Open Body 103" Whlbase - Export
T=2WD
J,N=4WD
U=4WD (RHD)

BODY STYLES:

YJ=Wrangler (4X4) "S"
Weangler (4X4) SE
Wrangler (4X4) Sahara
Wrangler (4X4) Renegade
XJ=Cherokee SE
Cherokee Sport
Cherokee Country
ZJ=Grand Cherokee SE
Grand Cherokee Laredo
Grand Cherolee Limited
ZG=Grand Cherokee European
Y1=Wrangler
X1=Cherokee
Z1=Grand Cherokee
KDX=Vehicles

AR = Use as Required - = Non Illustrated Part P.A.R. = Paint as Required

SAGIPARTS

GROUP-4
PARKING BRAKE

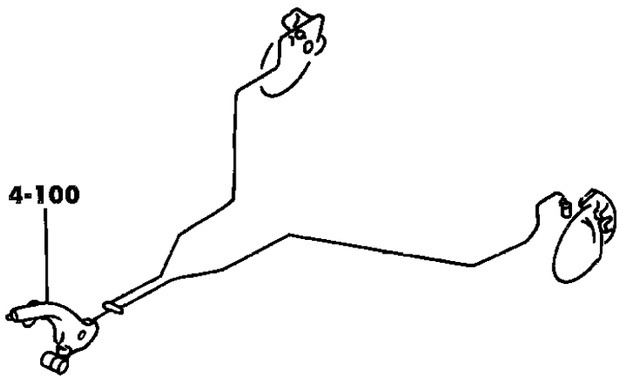

4-100 PARKING BRAKE 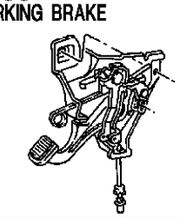			

ILLUSTRATION TITLE **GROUP-FIG. NO.**

LEVER ASSEMBLY AND CABLES

LEVER ASSEMBLY AND CABLES PARKING BRAKE WRANGLER, YJ . . . . . Fig. 4-110
LEVER ASSEMBLY AND CABLES PARKING BRAKE CHEROKEE . . . . . Fig. 4-120
LEVER ASSEMBLY AND CABLES PARKING BRAKE, FLOOR MOUNT WRANGLER, W/RHD (XDT) . . . . . Fig. 4-125
LEVER ASSEMBLY AND CABLES PARKING BRAKE GRAND CHEROKEE . . . . . Fig. 4-130

LEVER ASSEMBLY AND CABLES PARKING BRAKE WRANGLER, YJ
Figure 4-110

4-110A

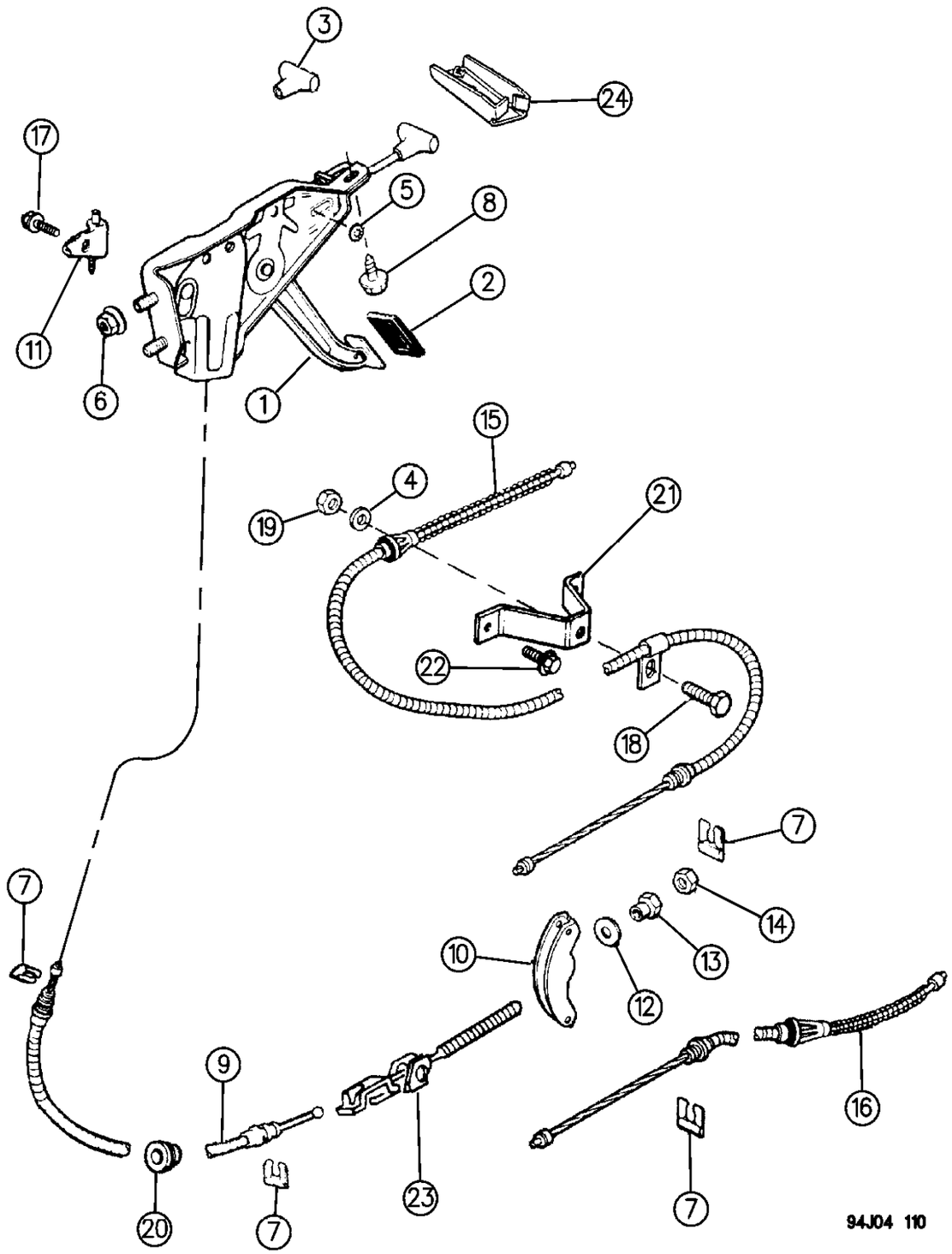

ITEM	PART NUMBER	QTY	BODY	MODEL	DESCRIPTION
1	5200 8250	1			LEVER ASSEMBLY, Brake ***
2	J322 0433	1			PAD, Pedal
3	J448 7994	1			HANDLE
4	J012 0393	1			WASHER
5	J320 8306	1			CLIP
6	J400 5704	1			NUT, 5/16-18
7	J321 7581	4			CLIP
8		1			SCREW, (Not Serviced)
9					CABLE, Brake
	5200 7048	1		77	
	5200 7049	1		78	KDX
10	5200 7532	1			EQUALIZER
11	5600 7167	1			SWITCH, Brake Warning Lamp
12	J400 1134	1			WASHER
13	6502 499	1			NUT, M8x1.25
14	1150 0749	1			NUT
15	5200 7522	1			CABLE, Brake, Right
16	5200 7523	1			CABLE, Brake, Left
17	9423 951	1			SCREW, .190-16x1.00
18	0180 077	1			BOLT, 5/16 Hex Hd 18x3/4
19	J941 3447	1			NUT, Hex Lock
20	J535 1742	1			GROMMET
21	J536 3211	1		78	BRACKET, KDX
22	S942 3777	2		78	BOLT, KDX
23	5200 7050	1			TENSIONER ASSEMBLY ***
	6502 499	1			NUT and C/WASHER, Hex W/Lk Insert M8x1.25
24	J545 9676	1			BRACKET ASSEMBLY, Hand Brake Stabilizer ***

MODEL CODES:

72=2 DR Wagon
74=4 DR Wagon
77=Open Body 93" Whlbase
78=Open Body 103" Whlbase - Export
T=2WD
J,N=4WD
U=4WD (RHD)

BODY STYLES:

YJ=Wrangler (4X4) "S"
Weangler (4X4) SE
Wrangler (4X4) Sahara
Wrangler (4X4) Renegade
XJ=Cherokee SE
Cherokee Sport
Cherokee Country
ZJ=Grand Cherokee SE
Grand Cherokee Laredo
Grand Cherolee Limited
ZG=Grand Cherokee European
Y1=Wrangler
X1=Cherokee
Z1=Grand Cherokee
KDX=Vehicles

AR = Use as Required - = Non Illustrated Part P.A.R. = Paint as Required

« RETURN TO GROUP INDEX

LEVER ASSEMBLY AND CABLES PARKING BRAKE CHEROKEE
Figure 4-120

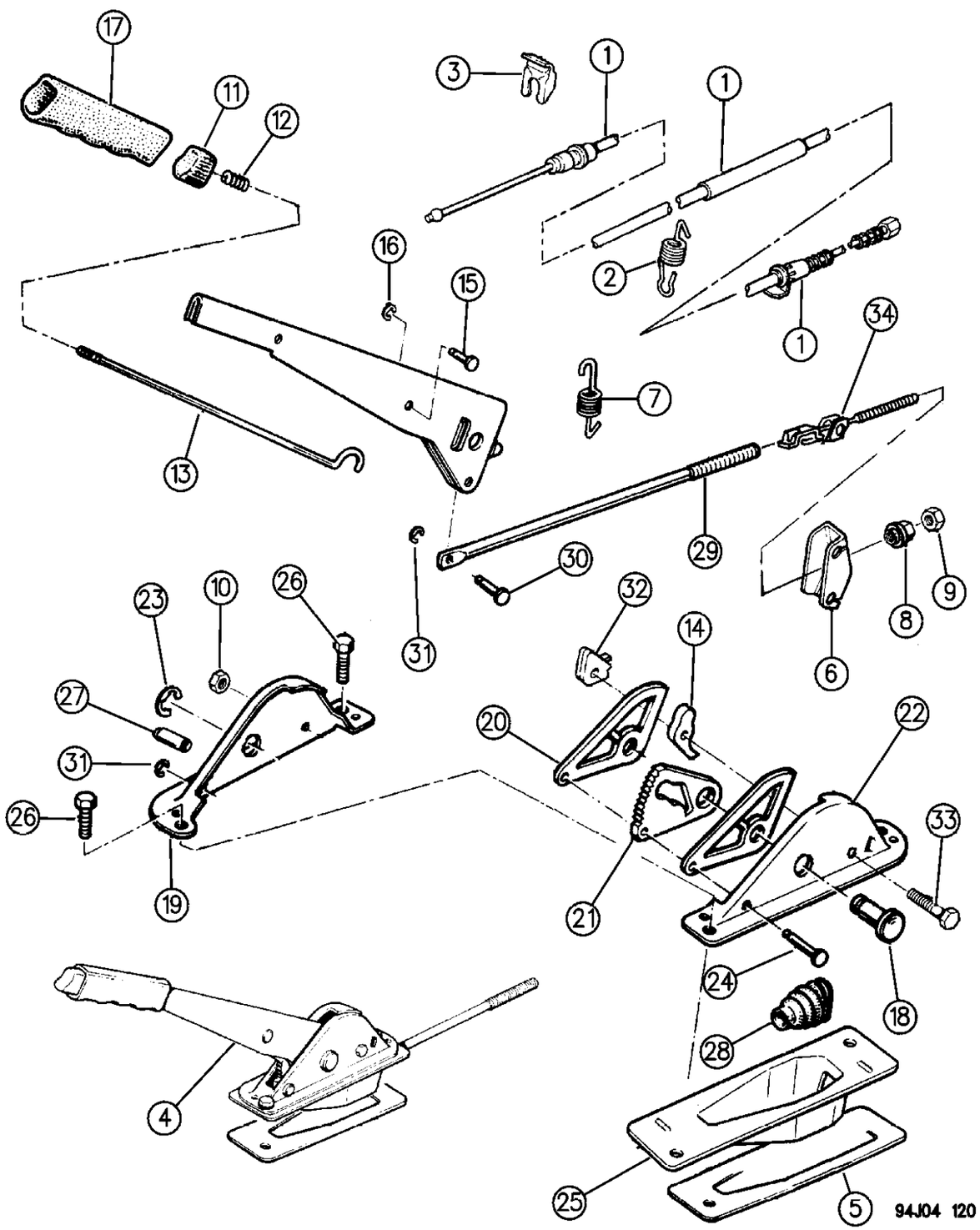

ITEM	PART NUMBER	QTY	BODY	MODEL	DESCRIPTION
1	5200 7600	2			CABLE, Parking Brake w/o Heat Shields, Exc. Chry. 8-1/4 Axle
	5200 8300	2			w/Heat Shields, w/Chry. 8-1/4 Axle
	4762 464	1			CABLE PACKAGE, Parking Brakes Consist of: 02 - 52008300
2	5200 1156	2			SPRING, Cable to U/B Seat Belt Plate
3	J321 7581	2			CLIP, Spring
4					LEVER & TENSIONER ASSEMBLY, Brake ***
	5207 8239	1			1994
	5207 8733	1			1995-96
5	3200 0744	1			SEAL
6	5200 7532	1			EQUALIZER
7					SPRING, Cable to Frame Rail
	5200 6657	1			1994
	5200 8894	1			1995-96
8	6502 499	1			NUT, M8x1.25 Hex
9	1150 0749	1			NUT, M8x1.25 Hex
10	J027 1163	1			NUT, Hex Lock
11					BUTTON, Brake Release (Serviced in Item #4)
12					SPRING, Release (Serviced in Item #4)
13					ROD, Release (Serviced in Item #4)
14					PAWL, Locking (Serviced in Item #4)
15	J305 0033	1			PIN, Pivot 5-13
16	J306 6150	1			CLIP, Retaining
17	5300 9151	1			HANDLE, Lever
18	J305 0070	1			SHAFT, Housing
19					HOUSING, Lever (Serviced in Item #4)
20					WASHER (Serviced in Item #4) ***
21					SECTOR, Locking (Serviced in Item #4) ***
22					HOUSING, Lever (Serviced in Item #4)
23	J306 6162	1			RING, Retaining
24	J305 0094	1			PIN, 6-23
25	5207 7661	1			COVER, Housing
26	3420 1381	2			SCREW, Hex M6x1.00x20.00
27					PIN (Serviced in Item #4) ***
28	5207 7759	1			BOOT ***
29					ROD, Adjusting (Serviced in Item #4)
30	5207 8010	1			PIN
31	5207 8012	2			CLIP, Locking
32					SWITCH, Brake Warning Lamp
	5600 7089	1			1994
	5209 922	1			1995-96
33	9423 951	1			SCREW, .190-16x1.00
34		1			TENTIONER ASSEMBLY, (Serviced Item #4) ***

MODEL CODES:

72=2 DR Wagon
74=4 DR Wagon
77=Open Body 93" Whlbase
78=Open Body 103" Whlbase - Export
T=2WD
J,N=4WD
U=4WD (RHD)

BODY STYLES:

YJ=Wrangler (4X4) "S"
Weangler (4X4) SE
Wrangler (4X4) Sahara
Wrangler (4X4) Renegade
XJ=Cherokee SE
Cherokee Sport
Cherokee Country
ZJ=Grand Cherokee SE
Grand Cherokee Laredo
Grand Cherolee Limited
ZG=Grand Cherokee European
Y1=Wrangler
X1=Cherokee
Z1=Grand Cherokee
KDX=Vehicles

AR = Use as Required - = Non Illustrated Part P.A.R. = Paint as Required

LEVER ASSEMBLY AND CABLES PARKING BRAKE CHEROKEE
Figure 4-120

4–120

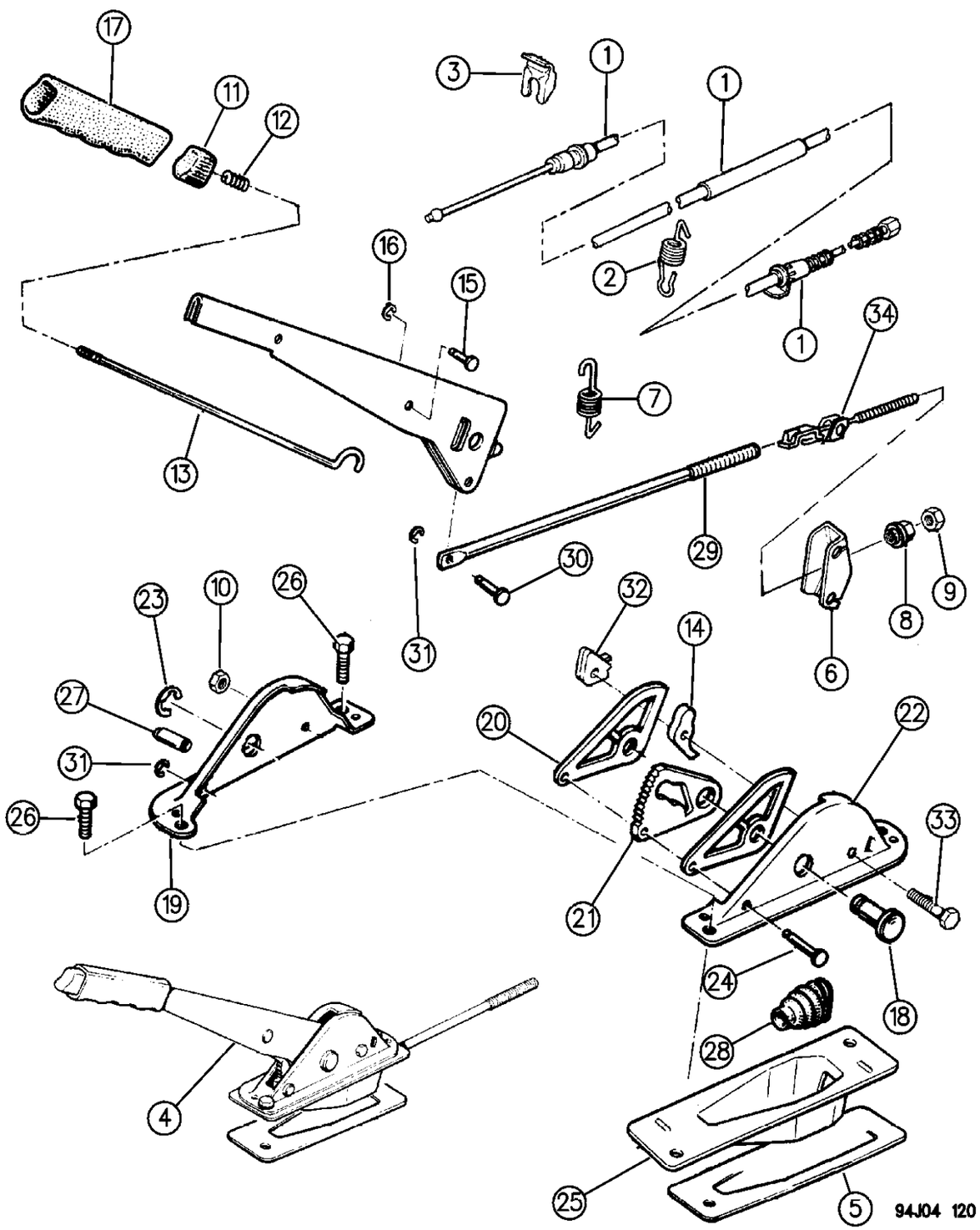

ITEM	PART NUMBER	QTY	BODY	MODEL	DESCRIPTION
-	J576 6468	2			INSULATOR, Rubber w/Adhesive E/Brk Cable Spring to Veh ***

MODEL CODES:

72=2 DR Wagon
74=4 DR Wagon
77=Open Body 93" Whlbase
78=Open Body 103" Whlbase - Export
T=2WD
J,N=4WD
U=4WD (RHD)

BODY STYLES:

YJ=Wrangler (4X4) "S"
Weangler (4X4) SE
Wrangler (4X4) Sahara
Wrangler (4X4) Renegade
XJ=Cherokee SE
Cherokee Sport
Cherokee Country
ZJ=Grand Cherokee SE
Grand Cherokee Laredo
Grand Cherolee Limited
ZG=Grand Cherokee European
Y1=Wrangler
X1=Cherokee
Z1=Grand Cherokee
KDX=Vehicles

AR = Use as Required - = Non Illustrated Part P.A.R. = Paint as Required

LEVER ASSEMBLY AND CABLES PARKING BRAKE, FLOOR MOUNT WRANGLER, W/RHD (XDT)
Figure 4-125

4–125

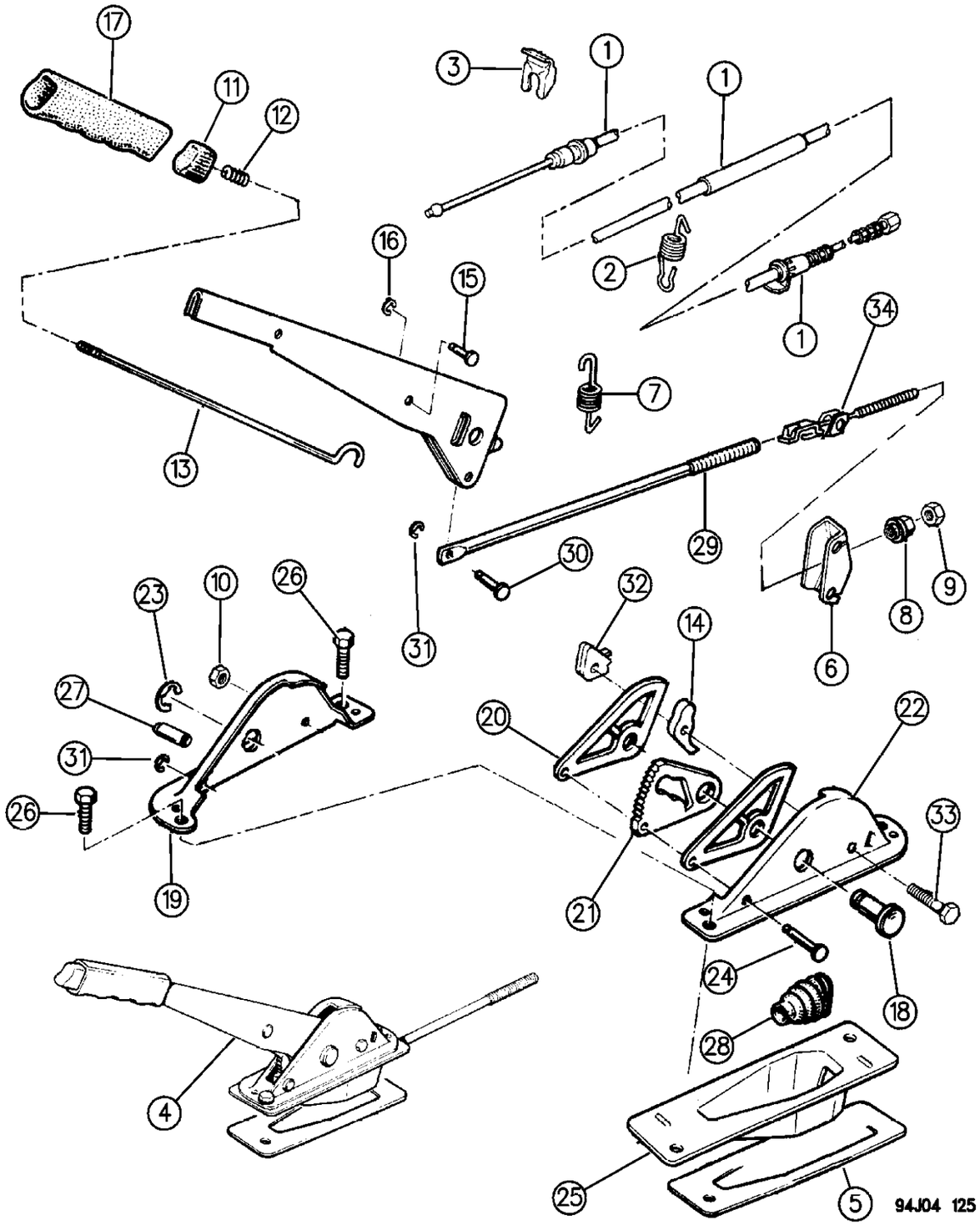

ITEM	PART NUMBER	QTY	BODY	MODEL	DESCRIPTION
1	5521 6598-9	1			CABLE, Parking Brake
2	5200 1156	2			SPRING, Cable to U/B Seat belt Plate
3	J321 7581	2			CLIP, Spring
4	5207 8733	1			LEVER ASSEMBLY, w/Tensioner ***
5	3200 0744	1			SEAL
6	5200 7532	1			EQUALIZER
7	5200 6657	1			SPRING, Cable to Frame Rail
8	6502 499	1			NUT, M8x1.25
9	1150 0749	1			NUT, M8x1.25
10	J027 1163	1			NUT, Lock
11		1			BUTTON, Brake Release (Serv. in Item #4)
12		1			SPRING, Release (Serv. in Item #4)
13		1			ROD, Release (Serv. in Item #4)
14		1			PAWL, Locking (Serv. in Item #4)
15	J305 0033	1			PIN, Pivot 5-13
16	J306 6150	1			CLIP, Retaining
17	5300 9151	1			HANDLE, Lever
18	J305 0070	1			SHAFT, Housing
19		1			HOUSING, Lever (Serv. in Item #4)
20		1			WASHER, (Serv. in Item #4)
21		1			SECTOR, Locking (Serv. in Item #4) ***
22		1			HOUSING, Lever (Serv. in Item #4)
23	J306 6162	1			RING, Retaining
24	J305 0094	1			PIN, 6-23
25	5207 7661	1			COVER, Housing
26	3420 1381	1			SCREW, M6x1.00x20.00
27		1			PIN, (Serv. in Item #4)
28	5207 7759	1			BOOT ***
29	5525 5656	1			ROD, Adjusting
30	5207 8010	1			PIN
31	5207 8012	2			CLIP, Locking
32	5209 922	1			SWITCH, Brake Warning Lamp
33	9423 951	1			SCREW, .190-16x1.00
34		1			TENTIONER ASSEMBLY. (Serv. in Item #4) ***

MODEL CODES:

72=2 DR Wagon
74=4 DR Wagon
77=Open Body 93" Whlbase
78=Open Body 103" Whlbase - Export
T=2WD
J,N=4WD
U=4WD (RHD)

BODY STYLES:

YJ=Wrangler (4X4) "S"
Weangler (4X4) SE
Wrangler (4X4) Sahara
Wrangler (4X4) Renegade
XJ=Cherokee SE
Cherokee Sport
Cherokee Country
ZJ=Grand Cherokee SE
Grand Cherokee Laredo
Grand Cherolee Limited
ZG=Grand Cherokee European
Y1=Wrangler
X1=Cherokee
Z1=Grand Cherokee
KDX=Vehicles

AR = Use as Required - = Non Illustrated Part P.A.R. = Paint as Required

« RETURN TO GROUP INDEX

LEVER ASSEMBLY AND CABLES PARKING BRAKE GRAND CHEROKEE
Figure 4-130

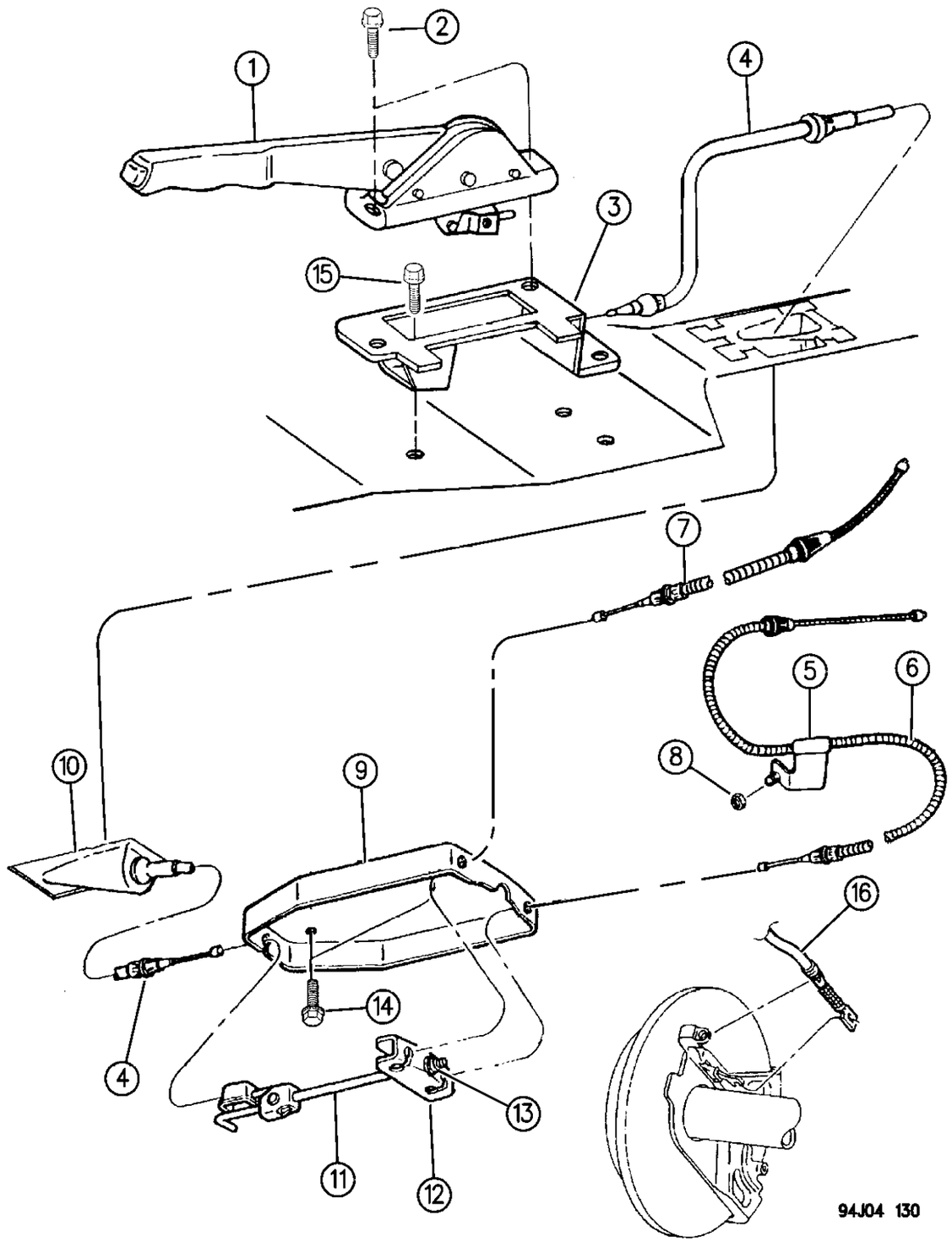

ITEM	PART NUMBER	QTY	BODY	MODEL	DESCRIPTION
1					LEVER ASSEMBLY, Parking Brake ***
	5207 8238	1			1994
	5207 8732	1			1995-96
	5305 4178	1	ZG		
-	5600 7089	1			SWITCH ASSEMBLY, Parking Brake ***
2	6502 640	2			SCREW, M6x1.00x17.00
3	5207 7544	1			BRACKET, Brake Mounting
4	5200 8232	1			CABLE ASSEMBLY, Parking Brake Front ***
5					BRACKET, Cable Support (Serviced in Items #6 & #7)
6	5200 5387	1			CABLE and BRACKET ASSEMBLY, Right Rear ***
7	5200 7588	1			CABLE and BRACKET ASSEMBLY, Left Rear ***
8	6101 695	2			NUT
9	5200 5873	1			BRACKET, Cable End Support
10	5200 5874	1			INSERT, Praking Brake Cable
11	5200 7842	1			TENTIONER, Cable Adjuster ***
12	5200 7532	1			EQUILIZER, Rear Parking Brake Cables ***
13	6502 499	1			NUT, Lock
14	6100 293	2			SCREW, M8x1.25x14.00
15	6502 640	3			SCREW, Park Brake to Mount Bracket, M6x1.00x17.00
16	5200 8244-5	1			CABLE, P/Brk Rear w/15" Disc, w/ABS
-	9423 951	1			SCREW, lever P/Brk .190-16x1.00

MODEL CODES:

72=2 DR Wagon
74=4 DR Wagon
77=Open Body 93" Whlbase
78=Open Body 103" Whlbase - Export
T=2WD
J,N=4WD
U=4WD (RHD)

BODY STYLES:

YJ=Wrangler (4X4) "S"
Weangler (4X4) SE
Wrangler (4X4) Sahara
Wrangler (4X4) Renegade
XJ=Cherokee SE
Cherokee Sport
Cherokee Country
ZJ=Grand Cherokee SE
Grand Cherokee Laredo
Grand Cherolee Limited
ZG=Grand Cherokee European
Y1=Wrangler
X1=Cherokee
Z1=Grand Cherokee
KDX=Vehicles

AR = Use as Required - = Non Illustrated Part P.A.R. = Paint as Required

« RETURN TO GROUP INDEX

SAGIPARTS

GROUP-5
SERVICE BRAKES

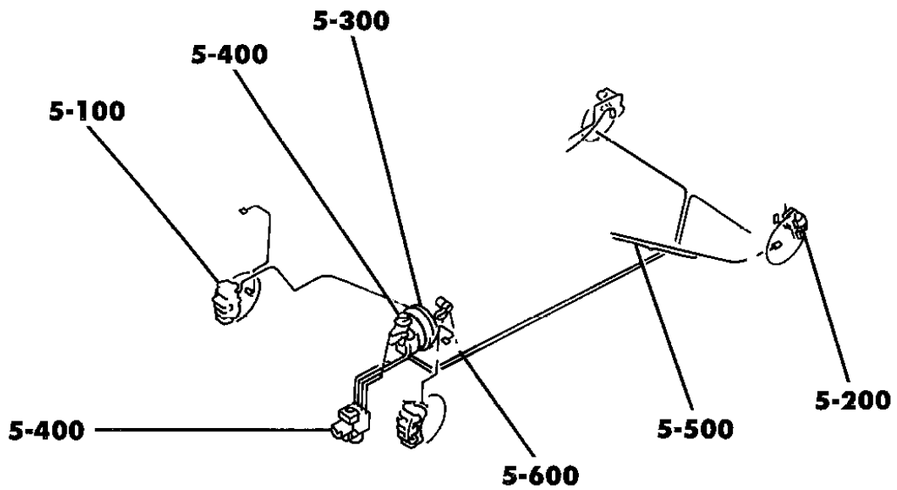

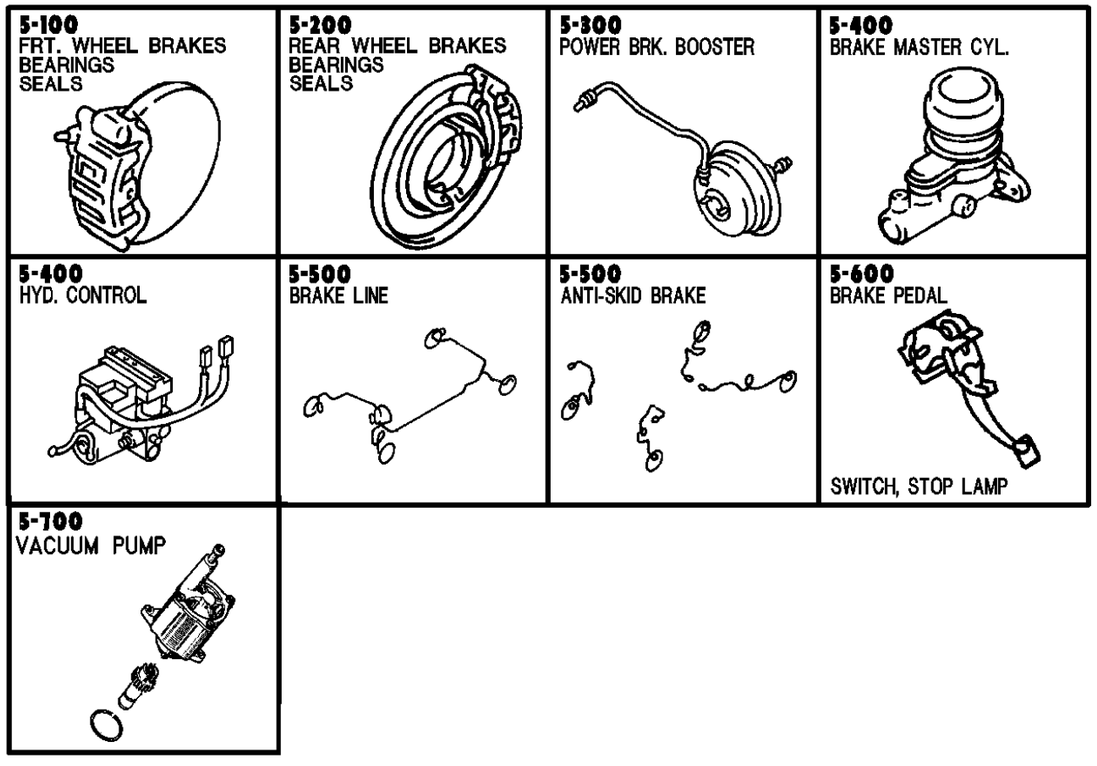

GROUP 5 - BRAKES, SERVICE

ILLUSTRATION TITLE	GROUP-FIG. NO.
FRONT BRAKES	
FRONT BRAKES WRANGLER, YJ	Fig. 5-110
FRONT BRAKES CHEROKEE, GRAND CHEROKEE	Fig. 5-120
REAR BRAKES	
REAR BRAKES WRANGLER, YJ	Fig. 5-210
REAR DRUM BRAKES DANA MODEL 35 OR CHRYSLER 8 1/4 CHEROKEE, GRAND CHEROKEE	Fig. 5-220
BRAKES, REAR DISC GRAND CHEROKEE	Fig. 5-230
BOOSTER AND MASTER CYLINDER	
BOOSTER AND MASTER CYLINDER WRANGLER, YJ	Fig. 5-310
BOOSTER AND MASTER CYLINDER U.S. AND CANADA, W/O ANTI-LOCK CHEROKEE	Fig. 5-320
BOOSTER AND MASTER CYLINDER EXPORT, W/O ANTI-LOCK CHEROKEE	Fig. 5-330
BOOSTER AND MASTER CYLINDER ANTI-LOCK CHEROKEE, GRAND CHEROKEE	Fig. 5-340
HYDRAULIC CONTROL UNIT	
HYDRAULIC CONTROL UNIT ANTI-LOCK WRANGLER, YJ	Fig. 5-410
HYDRAULIC CONTROL UNIT ANTI-LOCK CHEROKEE, GRAND CHEROKEE	Fig. 5-420
BRAKE LINES AND HOSES	
BRAKE LINES AND HOSES W/O ANTI-LOCK WRANGLER, YJ	Fig. 5-510
BRAKE LINES AND HOSES (FRONT) ANTI-LOCK WRANGLER, YJ	Fig. 5-520
BRAKE LINES AND HOSES (REAR) ANTI-LOCK WRANGLER, YJ	Fig. 5-530
BRAKE LINES AND HOSES W/O ANTI-LOCK CHEROKEE	Fig. 5-540
BRAKE LINES AND HOSES (FRONT) ANTI-LOCK CHEROKEE, GRAND CHEROKEE	Fig. 5-550
BRAKE LINES AND HOSES (REAR) ANTI-LOCK CHEROKEE, GRAND CHEROKEE	Fig. 5-560
BRAKE PEDAL	
BRAKE PEDAL WRANGLER, YJ	Fig. 5-610
BRAKE PEDAL CHEROKEE, GRAND CHEROKEE	Fig. 5-620
VACUUM PUMP	
DIESEL ENGINE VACUUM PUMP EXPORT CHEROKEE	Fig. 5-710

FRONT BRAKES WRANGLER, YJ
Figure 5-110

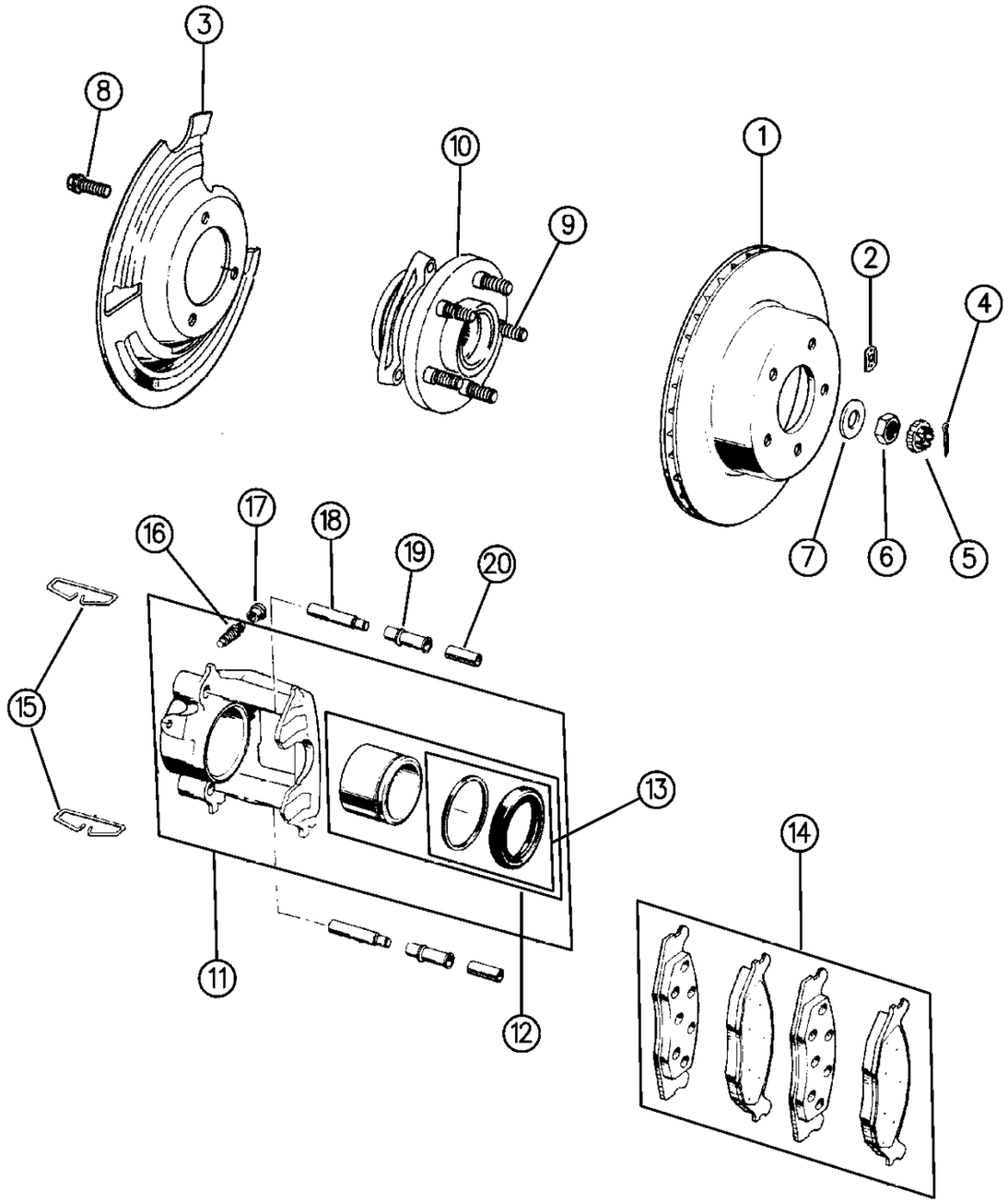

ITEM	PART NUMBER	QTY	BODY	MODEL	DESCRIPTION
1	5200 8440	2			ROTOR, Front Brake
	5602 7724	2			SENSOR PACKAGE, ABS Brakes ***
2	J400 6185	6			NUT
3	5200 5476-7	1			SHIELD, Splash
4	1101 0069	2			PIN
5	J420 0097	2			RETAINER
-	4740 749	2			WASHER, Wave
6	J420 0095	2			NUT
7	J420 0096	2			WASHER
8	3420 1535	6			BOLT
9	5300 7463	10			BOLT
10	5300 7449	2			HUB and BEARING ASSEMBLY, Front Brake ***
11	5252 984-5	1			CALIPER, Front Brake
12	5252 614	2			PISTON PACKAGE, Front Brake Caliper ***
13	J813 3852	2			SEAL PACKAGE, Front Brake Caliper
14	4713 175	1			PAD PACKAGE, FRONT BRAKE CALIPERS
15	J323 9865	4			CLIP, Anti-Rattle
16	J320 3313	2			SCREW, Bleeder
17	4238 717	2			CAP
18	5253 000	4			PIN, Caliper
19	4383 471	4			BUSHING
20	4423 573	4			SLEEVE

MODEL CODES:

72=2 DR Wagon
74=4 DR Wagon
77=Open Body 93" Whlbase
78=Open Body 103" Whlbase - Export
T=2WD
J,N=4WD
U=4WD (RHD)

BODY STYLES:

YJ=Wrangler (4X4) "S"
Weangler (4X4) SE
Wrangler (4X4) Sahara
Wrangler (4X4) Renegade
XJ=Cherokee SE
Cherokee Sport
Cherokee Country
ZJ=Grand Cherokee SE
Grand Cherokee Laredo
Grand Cherolee Limited
ZG=Grand Cherokee European
Y1=Wrangler
X1=Cherokee
Z1=Grand Cherokee
KDX=Vehicles

AR = Use as Required - = Non Illustrated Part P.A.R. = Paint as Required

« RETURN TO GROUP INDEX

FRONT BRAKES CHEROKEE, GRAND CHEROKEE
Figure 5-120

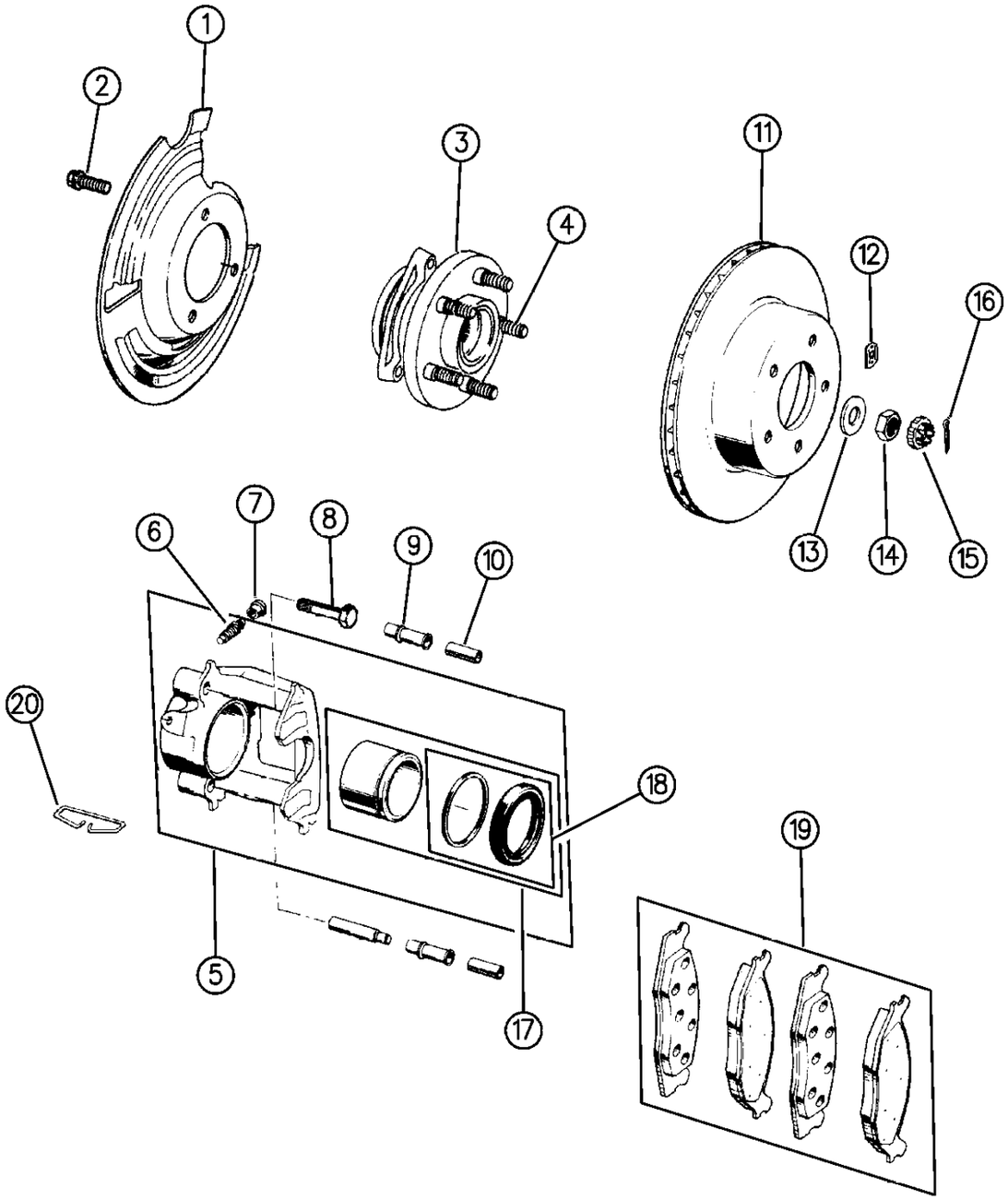

ITEM	PART NUMBER	QTY	BODY	MODEL	DESCRIPTION
1	5200 5476-7	1			SHIELD, Splash
2	3420 1535	6			BOLT
3	5300 7449	2			HUB and BEARING ASSEMBLY, Front Brake Roller Bearing ***
	4741 360	1	ZJ		SHIM PACKAGE, Front Hub ***
4	5300 7463	10			BOLT
5	5252 984-5	1			CALIPER, Brake
6	J320 3313	2			SCREW, Bleeder
7	4238 717	2			CAP, Bleeder Screw
8	5253 000	4			PIN, Caliper
9	4383 471	4			BUSHING
10	4423 573	4			SLEEVE
11	5200 8440	2			ROTOR, Brake
12	J400 6185	6			NUT
13	J420 0096	2			WASHER
14	J420 0095	2			NUT
15	J420 0097	2			RETAINER
-	4740 749	2			WASHER, Wave
16	1101 0069	2			PIN, Cotter
17	5252 614	2			PISTON PACKAGE ***
18	J813 3852	2			SEAL PACKAGE
19	4778 058	1			PAD PACKAGE, Brake
20	J323 9865	4			CLIP, Anti-Rattle

MODEL CODES:

72=2 DR Wagon
74=4 DR Wagon
77=Open Body 93" Whlbase
78=Open Body 103" Whlbase - Export
T=2WD
J,N=4WD
U=4WD (RHD)

BODY STYLES:

YJ=Wrangler (4X4) "S"
Weangler (4X4) SE
Wrangler (4X4) Sahara
Wrangler (4X4) Renegade
XJ=Cherokee SE
Cherokee Sport
Cherokee Country
ZJ=Grand Cherokee SE
Grand Cherokee Laredo
Grand Cherolee Limited
ZG=Grand Cherokee European
Y1=Wrangler
X1=Cherokee
Z1=Grand Cherokee
KDX=Vehicles

AR = Use as Required - = Non Illustrated Part P.A.R. = Paint as Required

« RETURN TO GROUP INDEX

REAR BRAKES WRANGLER, YJ
Figure 5-210

5-210A

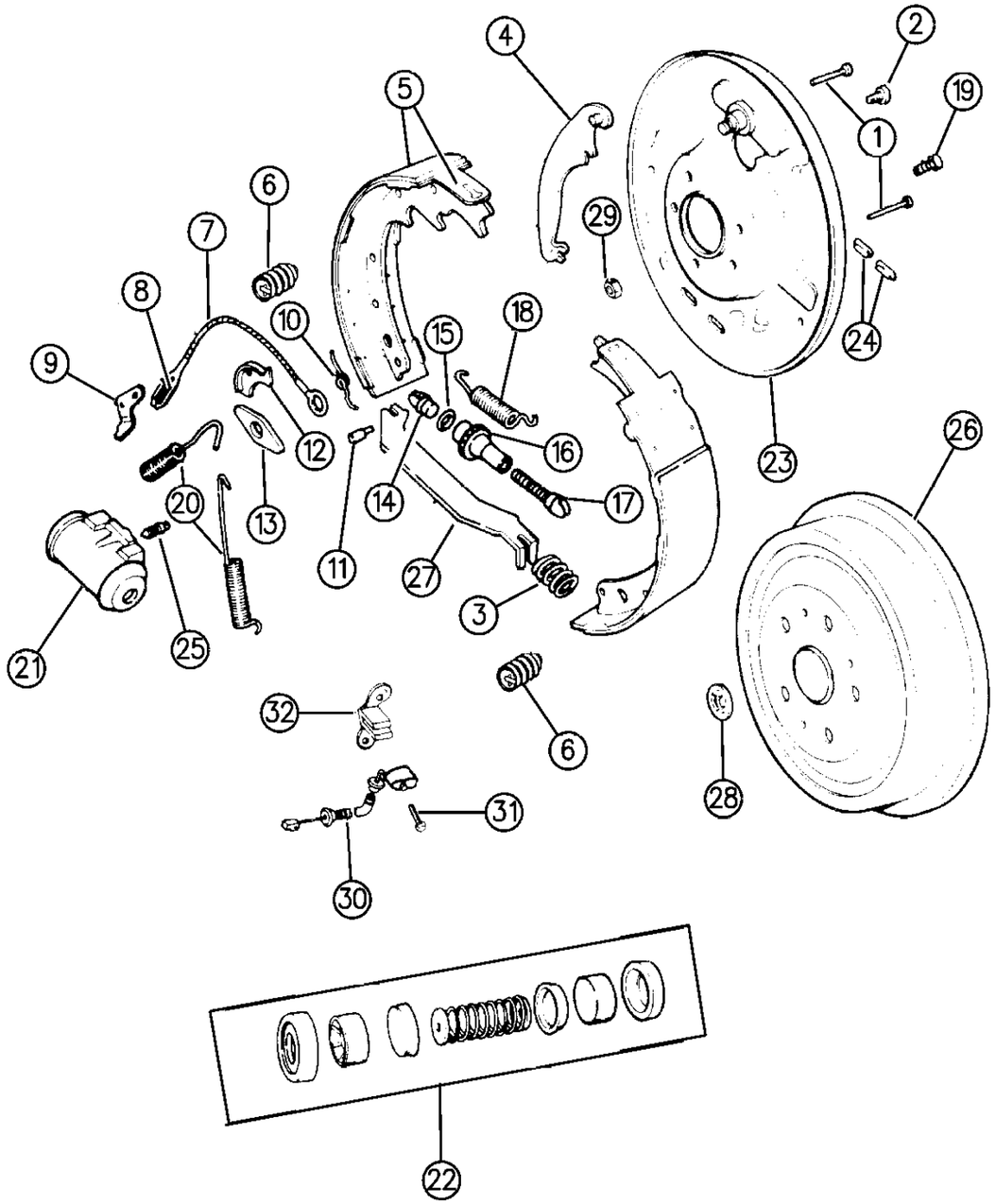

94J05 210

ITEM	PART NUMBER	QTY	BODY	MODEL	DESCRIPTION
1	2260 548	4			PIN, Brake Shoe Hold Down
2	6028 921	4			SCREW, Cylinder Mounting
3	4313 079	2			SPRING, Parking Brake Strut
4	4313 810-1	1			LEVER, Parking Brake
5	4723 367	1			SHOE and LINING PACKAGE, Rear Brake
6	4313 062	4			SPRING ASSEMBLY, Hold Down ***
7	3461 662	2			CABLE, Automatic Adjuster
8	3461 660	2			SPRING, Automatic Adjuster Cable
9	3461 665	2			LEVER, Automatic Adjuster
10	2944 580-1	1			SPRING, Automatic Adjuster Lever
11	4049 681	1			PIN PACKAGE, Autommatic Adjuster Lever
12	2260 793	2			GUIDE, Automatic Adjuster Cable
13	4313 075	2			PLATE, Guide
14	2944 586	2			BUTTON, Automatic Adjuster
15	6027 559	2			WASHER, Automatic Adjuster Button
16	2944 692-3	1			NUT, Automatic Adjuster Pivot Screw
17	2881 686-7	1			SCREW, Automatic Adjuster Pivot
18	4313 069	2			SPRING, Shoe to Shoe
19	J099 4313	8			BOLT, Rear Wheel Brake Mounting
20	2881 676	4			SPRING, Brake Shoe Return
21	4423 601	2			CYLINDER, Rear WheelBrake
22	5252 630	2			REPAIR PACKAGE, Wheel Cylinder Rear Brake
23					PLATE, Backing
	5252 720-1	1			w/o ABS Brakes
	5252 718-9	1			w/ABS Brakes
24	4238 721	4			PLUG, Brake Adjuster Hole
25	3766 674	2			SCREW, Bleeder
26					DRUM, Rear Wheel Brake
	5200 5350	2			w/LHD
	5200 1915	2			w/RHD (XDT) (Stamped 87087-7)
27	4313 078	2			STRUT, Parking Brake Lever
28	6026 430	4			RETAINER, Brake Drum
29	J941 1783	8			NUT
30	5200 5936	2			SENSOR, ABS Brakes
31	8350 4920	2			BOLT
32	5200 7804-5	1			BRACKET, Sensor ABS Brakes
	4636 779	1			BRAKE PACKAGE, Hardware w/DANA 35 Axle ***

MODEL CODES:

72=2 DR Wagon
74=4 DR Wagon
77=Open Body 93" Whlbase
78=Open Body 103" Whlbase - Export
T=2WD
J,N=4WD
U=4WD (RHD)

BODY STYLES:

YJ=Wrangler (4X4) "S"
Weangler (4X4) SE
Wrangler (4X4) Sahara
Wrangler (4X4) Renegade
XJ=Cherokee SE
Cherokee Sport
Cherokee Country
ZJ=Grand Cherokee SE
Grand Cherokee Laredo
Grand Cherolee Limited
ZG=Grand Cherokee European
Y1=Wrangler
X1=Cherokee
Z1=Grand Cherokee
KDX=Vehicles

AR = Use as Required - = Non Illustrated Part P.A.R. = Paint as Required

« RETURN TO GROUP INDEX

REAR DRUM BRAKES DANA MODEL 35 OR CHRYSLER 8 1/4 CHEROKEE, GRAND CHEROKEE
Figure 5-220

5-220A

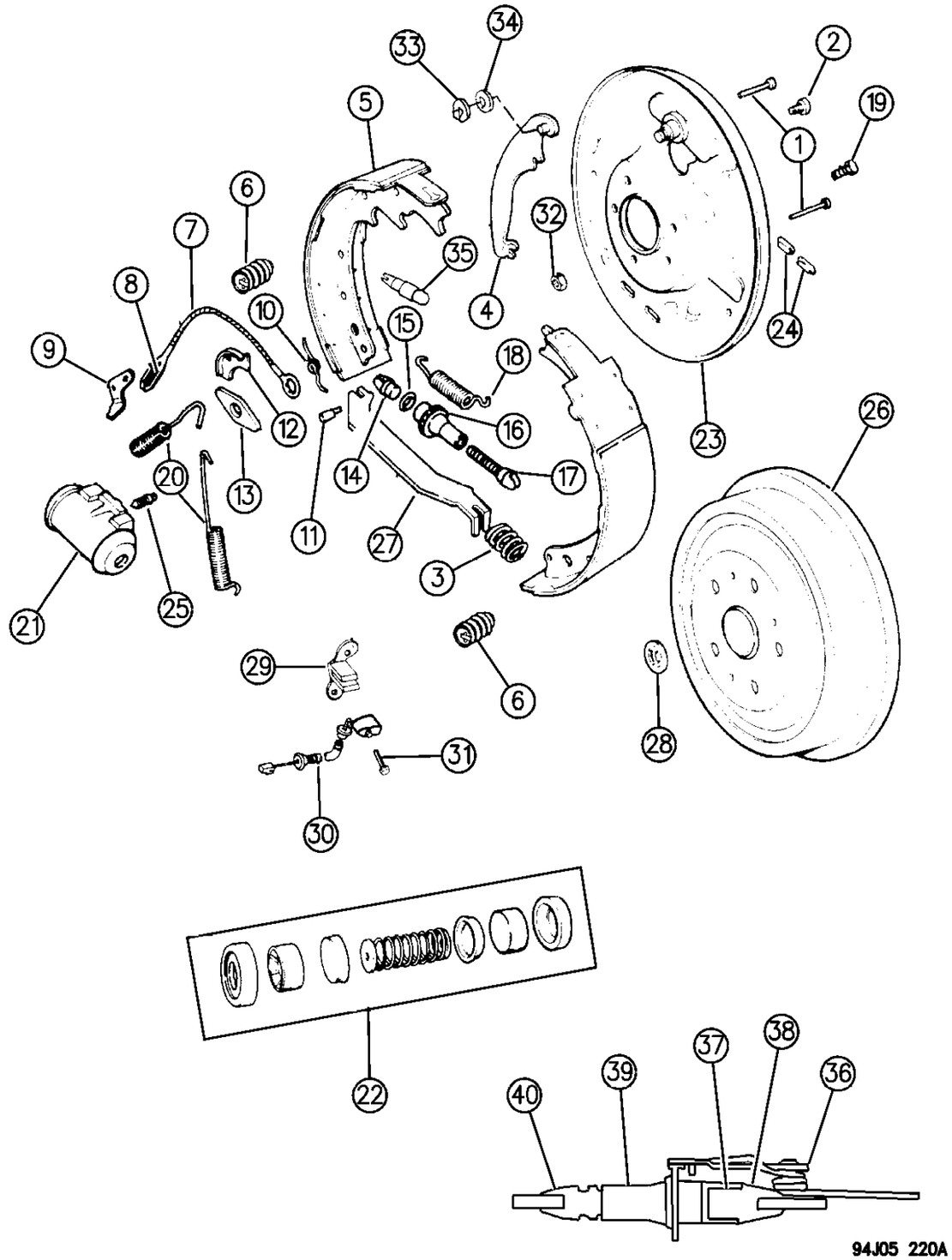

ITEM	PART NUMBER	QTY	BODY	MODEL	DESCRIPTION
1	2260 548	4	XJ		PIN, Brake Shoe Hold Down 9" Brakes
	4746 783	4	XJ,ZJ		10" Brakes
2	6028 921	4	XJ		SCREW, Cylinder Mounting 9" Brakes
3	4713 590	2	XJ		SPRING, Parking Brake Strut 9" Brakes
	8350 4918	2	XJ,ZJ		10" Brakes
4					LEVER, Parking Brake
	4313 810-1	1	XJ		9" Brakes
	4713 362-3	1	XJ,ZJ		10" Brakes
5					SHOE and Lining PACKAGE ***
	4723 367	1	XJ		9" Brakes
	4713 365	1	XJ,ZJ		10" Brakes
6	4313 062	4	XJ		SPRING ASSEMBLY, Hold Down 9" Brakes ***
	4746 782	4	XJ,ZJ		10" Brakes
7					CABLE, Automatic Adjuster
	3461 662	2	XJ		9" Brakes
	4713 350	2	XJ,ZJ		10" Brakes
8	3461 660	2	XJ		SPRING, Automatic Adjuster 9" Brakes
9					LEVER, Automatic Adjuster
	4761 759	2	XJ		9" Brakes
	4728 546-7	1	XJ,ZJ		10" Brakes
10	2944 580-1	1	XJ		SPRING, Automatic Adjuster Lever 9" Brakes
11	4049 681	1			PIN PACKAGE, Automatic Adjuster Lever
12					GUIDE, Automatic Adjuster Cable
	2260 793	2	XJ		9" Brakes
	J320 1947	2	XJ,ZJ		10" Brakes
	2260 788	2	XJ,ZJ		PLATE, Rear Wheel Shoe Guide
13	4313 075	2	XJ		GUIDE, Rear Wheel Brake Anchor Shoe w/9" Brakes
	4762 141	2	XJ,ZJ		w/10" Brakes
14	2944 586	2	XJ		BUTTON, Automatic Adjuster 9" Brakes
15	6027 559	2	XJ		WASHER, Automatic Adjuster Button 9" Brakes
16	2944 692-3	1	XJ		NUT, Automatic Adjuster Pivot Screw 9" Brakes
17	2881 686-7	1	XJ		SCREW, Automatic Adjuster Pivot 9" Brakes
18	4423 085	2	XJ		SPRING, Shoe to Shoe 9" Brakes
	4746 588	4	XJ,ZJ		10" Brakes
19	J099 4313	8			BOLT, Rear Wheel Brake Mounting
20	2881 676	4	XJ		SPRING, Brake Shoe Return 9" Brakes
	J311 2780	2	XJ,ZJ		10" Brakes
21					CYLINDER, Wheel
	4423 601	2	XJ		w/o ABS, 9" Brakes
	4313 056	2	XJ		ABS, 9" Brakes
	5200 0848-9	1	XJ,ZJ		10" Brakes
22					REPAIR PACKAGE, Wheel Cylinder

MODEL CODES:

72=2 DR Wagon
74=4 DR Wagon
77=Open Body 93" Whlbase
78=Open Body 103" Whlbase - Export
T=2WD
J,N=4WD
U=4WD (RHD)

BODY STYLES:

YJ=Wrangler (4X4) "S"
Weangler (4X4) SE
Wrangler (4X4) Sahara
Wrangler (4X4) Renegade
XJ=Cherokee SE
Cherokee Sport
Cherokee Country
ZJ=Grand Cherokee SE
Grand Cherokee Laredo
Grand Cherolee Limited
ZG=Grand Cherokee European
Y1=Wrangler
X1=Cherokee
Z1=Grand Cherokee
KDX=Vehicles

AR = Use as Required - = Non Illustrated Part P.A.R. = Paint as Required

REAR DRUM BRAKES DANA MODEL 35 OR CHRYSLER 8 1/4 CHEROKEE, GRAND CHEROKEE
Figure 5-220

5-220A

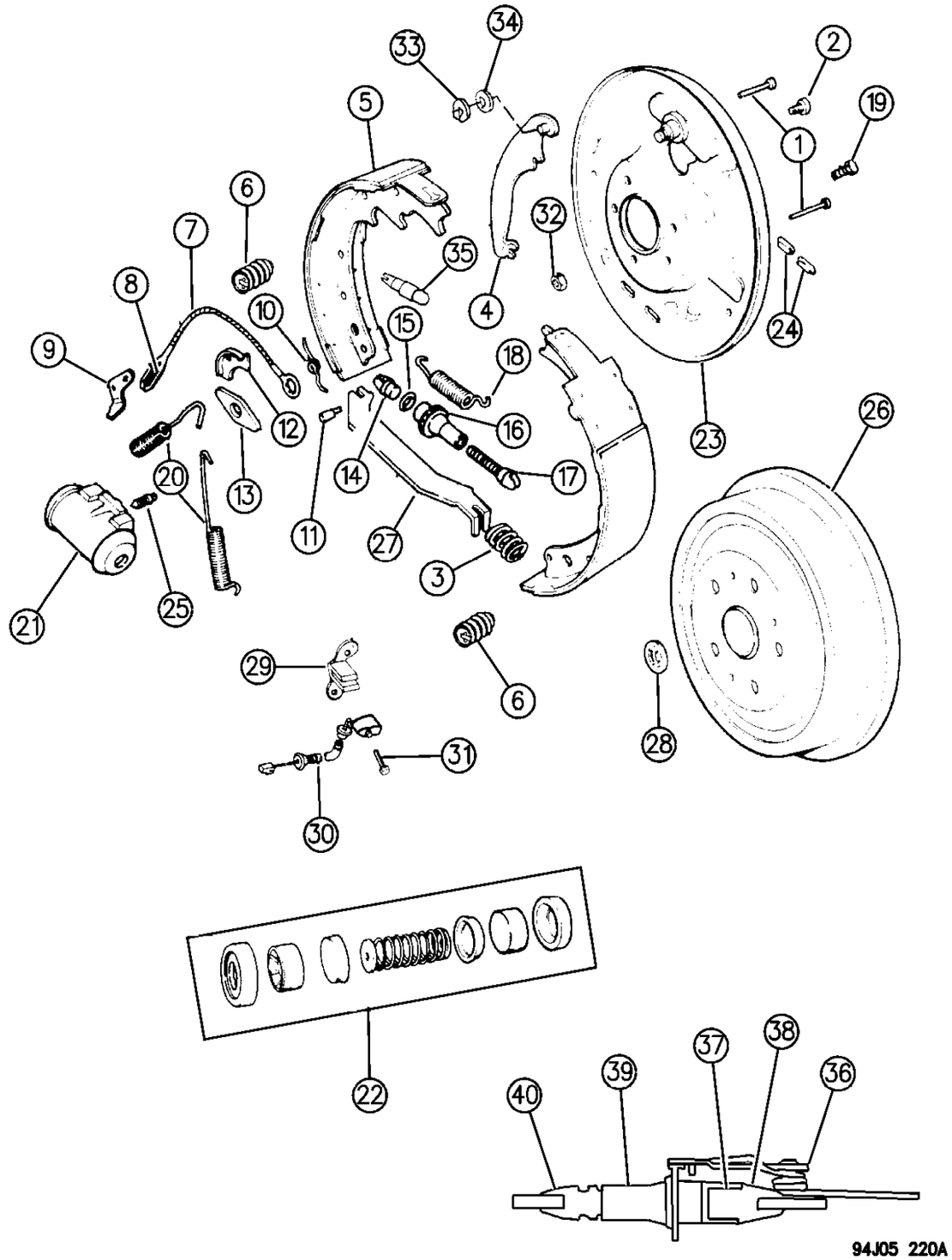

ITEM	PART NUMBER	QTY	BODY	MODEL	DESCRIPTION
	5252 630	2	XJ		w/o ABS, 9' Brakes
	5252 631	2	XJ		ABS, 9" Brakes
	8350 0987	2	XJ,ZJ		10" Brakes
23					PLATE, Backing
	5252 720-1	1	XJ		w/o ABS, 9" Brakes
	5252 718-9	1	XJ		ABS, 9" Brakes
	4713 368-9	1	XJ,ZJ		10" Brakes
	4773 490-1	1	Z1		Export
24	4238 721	4	XJ		PLUG, Brake Adjuster Hole 9" Brakes
	3200 0147	2	XJ,ZJ		10' Brakes
25	3766 674	2	XJ		SCREW, Bleeder 9" Brakes
26					DRUM, Rear Brake
	5200 5350	2	XJ		9" Brakes
	5200 7502	2	XJ,ZJ		10" Brakes
27					STRUT, Parking Brake Lever
	4713 590	2	XJ		9" Brakes
	4713 366-7	1	XJ,ZJ		10" Brakes
	4713 364	1	XJ,ZJ		WASHER, P/Brake Strut w/10" Brakes
	4773 762	1	XJ,ZJ		CLIP, Rear Wheel P/Brk. Strut w/10"Brakes
28	6026 430	4			RETAINER, Brake Drum
29	5200 7804-5	1			BRACKET, Sensor ABS Brakes
30					SENSOR, ABS Brakes
	5200 5932-3	1	XJ		
	5600 5218-9	1	ZJ		w/Rear Drum Brakes
31	8350 4920	2			BOLT, Hex Flanged Head
32	J941 1783	8			NUT
33	J310 8202	2	XJ,ZJ		RETAINER, Lever 10" Brakes
34	8350 2900	2	XJ,ZJ		WASHER, Lever Retainer 10" Brakes
35	J004 8331	2	XJ,ZJ		LINK, Cylinder 10" Brakes
36	4746 582-3	1	XJ,ZJ		SPRING, Adjuster 10" Brakes
37	4746 585	2	XJ,ZJ		WASHER, 10" Brakes
38	4746 586	2	XJ,ZJ		SOCKET, 10" Brakes
39	2944 692-3	1	XJ,ZJ		NUT, Adjuster 10" Brakes
40	2881 686-7	1	XJ,ZJ		PIVOT, Screw 10" Brakes
	4636 779	1	XJ		BRAKE PACKAGE, Hardware, Dana Model 35, 9" Brakes (Contains Items 1,3,6,7,12,18,20) ***

MODEL CODES:

72=2 DR Wagon
74=4 DR Wagon
77=Open Body 93" Whlbase
78=Open Body 103" Whlbase - Export
T=2WD
J,N=4WD
U=4WD (RHD)

BODY STYLES:

YJ=Wrangler (4X4) "S"
Weangler (4X4) SE
Wrangler (4X4) Sahara
Wrangler (4X4) Renegade
XJ=Cherokee SE
Cherokee Sport
Cherokee Country
ZJ=Grand Cherokee SE
Grand Cherokee Laredo
Grand Cherolee Limited
ZG=Grand Cherokee European
Y1=Wrangler
X1=Cherokee
Z1=Grand Cherokee
KDX=Vehicles

AR = Use as Required - = Non Illustrated Part P.A.R. = Paint as Required

BRAKES, REAR DISC GRAND CHEROKEE
Figure 5-230

5-230A

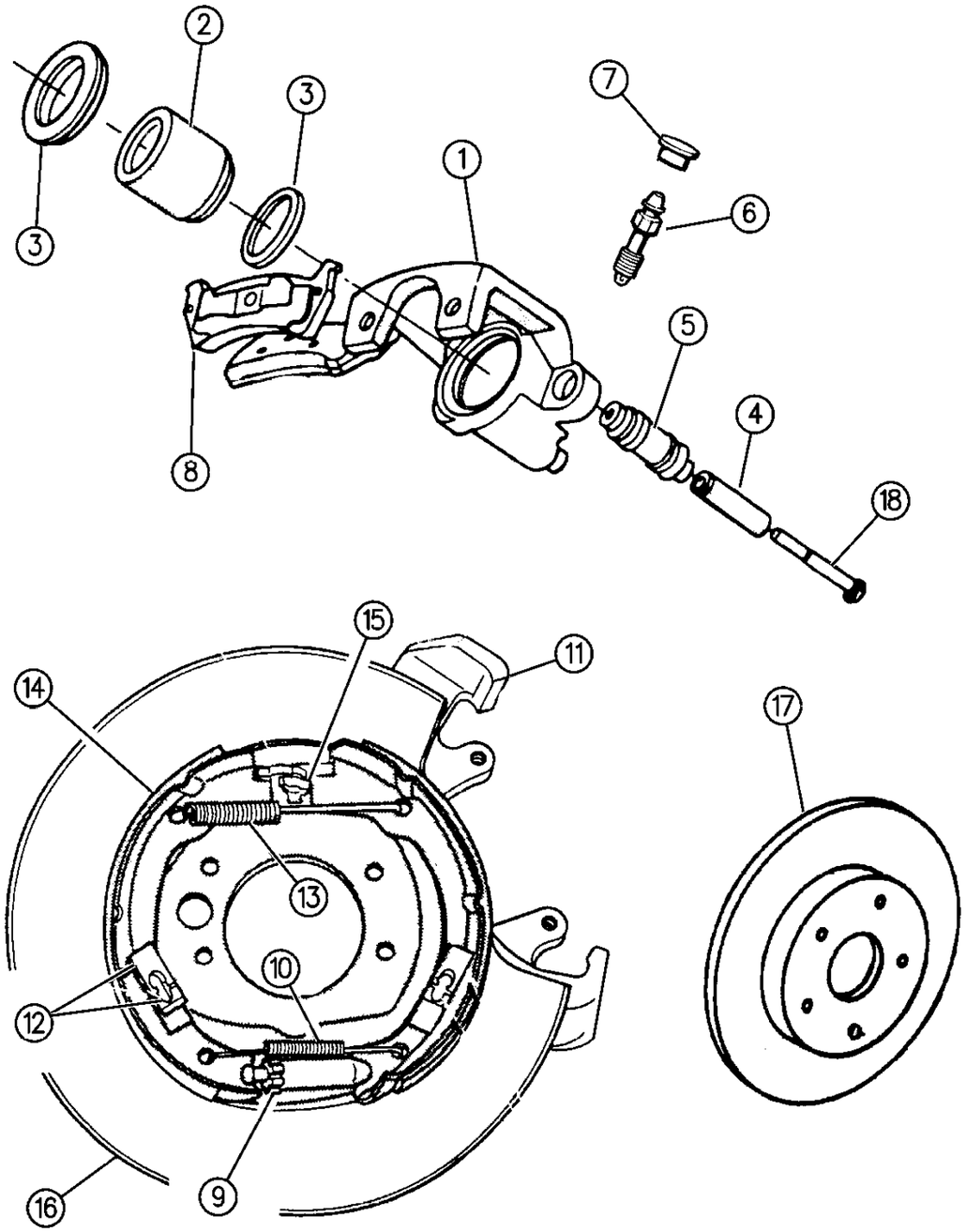

ITEM	PART NUMBER	QTY	BODY	MODEL	DESCRIPTION
1	4762 102-3	1			HOUSING, Rear Wheel Disc. Brake
2	4762 111	2			PISTON, Rear Wheel Disc. Brake
3	4762 110	2			BOOT and SEAL PACKAGE
4	4762 105	2			SLEEVE, Locating Pin
5	4762 106	2			INSULATOR, Cal. Locating Pin
6	J092 0463	2			SCREW, Bleeder
7	4762 113	2			CAP, Rear Wheel Brake Cylinder Bleeder Screw
8					LINING PACKAGE, Disc. Brake ***
	4762 101	1			1994 Up to VIN #358321
	4796 344	1			1994 After VIN #358321
	4796 344	1			1995-96
9	4762 115	2			SOCKET, Rear Wheel Parking Brake Adjuster
	4762 118	2			NUT, P/Brake Adjust
	4762 120	2			SCREW, Rear Wheel P/Brake Adjust
10	4762 116	2			SPRING, P/Brake Shoe Return Lower
11					ADAPTER, Rear Wheel Disc. Brake
	4762 122-3	1			1994 Up to VIN #358321
	4796 342-3	1			1994 After VIN #358321
	4796 342-3	1			1995-96
12	4762 125	2			CLIP, P/Brake Shoe Hold Down
	4762 126	2			PIN, Rear Wheel P/Brake Shoe Hold Down Spring
13	4762 127	2			SPRING, P/Brake Shoe Upper
14					SHOE and LINING, Rear Wheel P/Brake
	4762 114	1			1994 Up to VIN #358321
	4796 337	1			1994 After VIN #358321
	4796 337	1			1995-96
15	4762 130-1	1			LEVER, P/Brake (Cable)
	4762 132	2			LEVER, P/Brake (Slide)
16	4762 128-9	1			PLATE, Backing Rear Wheel Disc. Brake
17	5200 8184	2			ROTOR, Rear Disc. Brakes
	4762 121	2			PLUG, Rear Wheel Brake Adjuster Hole
-	4762 124	1			BOOT, Lever
-	5602 6930-1	1			SENSOR, Wheel Speed Rear Disc. Brakes 1994-95
-	5602 7722-3	1			SENSOR, Wheel Speed Rear Disc. Brakes 1996
-	4762 191	2			BOLT, Sensor Mounting
18	5253 000	4			PIN, Caliper Mount
	5200 8783	2			CLIP, Brake Caliper Hold Down

MODEL CODES:

72=2 DR Wagon
74=4 DR Wagon
77=Open Body 93" Whlbase
78=Open Body 103" Whlbase - Export
T=2WD
J,N=4WD
U=4WD (RHD)

BODY STYLES:

YJ=Wrangler (4X4) "S"
Weangler (4X4) SE
Wrangler (4X4) Sahara
Wrangler (4X4) Renegade
XJ=Cherokee SE
Cherokee Sport
Cherokee Country
ZJ=Grand Cherokee SE
Grand Cherokee Laredo
Grand Cherolee Limited
ZG=Grand Cherokee European
Y1=Wrangler
X1=Cherokee
Z1=Grand Cherokee
KDX=Vehicles

AR = Use as Required - = Non Illustrated Part P.A.R. = Paint as Required

« RETURN TO GROUP INDEX

BOOSTER AND MASTER CYLINDER WRANGLER, YJ
Figure 5-310

5-310

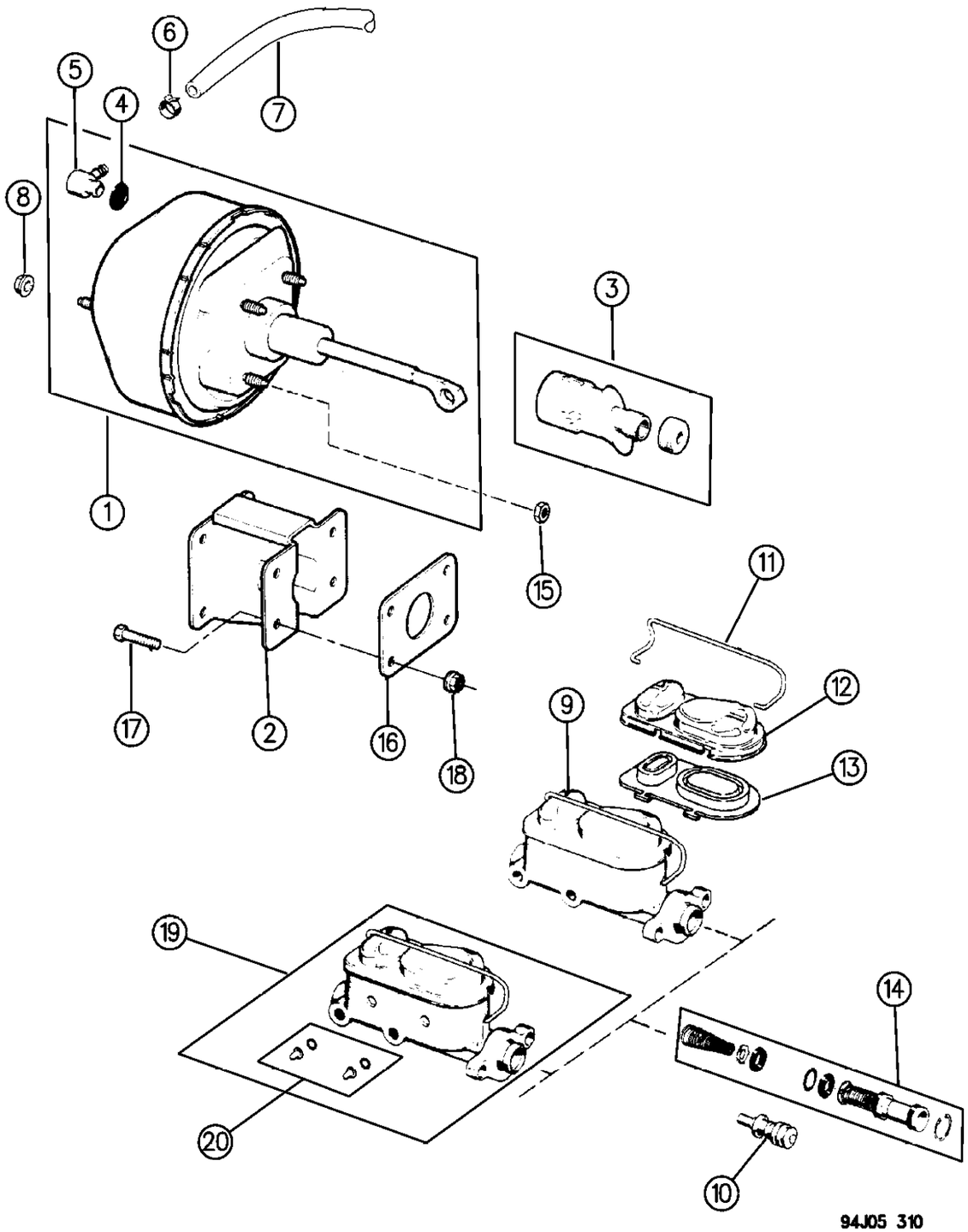

ITEM	PART NUMBER	QTY	BODY	MODEL	DESCRIPTION
1					BOOSTER, Brake
	4637 862	1			w/2.5L Eng., w/o ABS 1994-95
	4637 862	1			w/4.0L Eng., w/o ABS 1994
	4723 133	1			w/4.0L Eng., w/ABS 1994
	4761 785	1			w/4.0L Eng., w/or w/o ABS 1995
-	5602 6763	1			SENSOR, Brake Pedal Travel (ABS)
2	8350 2847	1			BRACKET ASSEMBLY, Booster
	5200 8059	1			SPACER, Bracket-Booster to Dash (ABS)
3	8350 2848	1			GUARD PACKAGE, Booster ***
4	J320 8510	1			GROMMET, Valve
5	8350 3496	1			VALVE, Check
6	J321 9466	1			CLAMP
7	5200 6298	1			HOSE, Vacuum (Bulk)
	5200 7363	1			HOSE, Booster Vacuum w/ABS 1994
	5200 8606	1			1995
	5200 8954	1			RHD (XDT)
8	J400 3909	2			NUT
9					CYLINDER, Brake Master
	5252 626	1			w/2.5L Eng., w/o ABS 1994-95
	5252 626	1			w/4.0L Eng., w/o ABS 1994
	4741 834	1			w/4.0L Eng., w/ABS 1994
	4761 940	1			w/4.0L Eng., w/ or w/o ABS 1995
-	5200 7892	1			HOSE, M/Cylinder to HCU, Primary (ABS)
-	5200 7893	1			HOSE, M/Cylinder to HCU Secondary (ABS)
-	5200 8277	4			CLAMP, Hose M/Cylinder to HCU
	4761 736	1			RESEVOIR, Master Cylinder w/ABS 1994 ***
	4761 943	1			w/ABS 1995
10		1			PISTON, Master Cylinder (Serv. in Item #19 Only)
11	J813 3910	1			RETAINER
12	8350 4454	1			COVER, Master Cylinder 1994
	4761 944	2			CAP, 1995
13	8350 4455	1			GASKET, 1994
	4723 395	2			SEAL, 1995
14	5252 629	1			REPAIR PACKAGE, Master Cylinder
15	8350 0105	4			NUT
16	5200 1844	1			SEAL
17	J018 0123	4			BOLT
18	J400 3909	1			NUT
19	5252 627	1			CYLINDER, Brake Master EUROPE
20	8350 0142	1			GLASS, Sight EUROPE
		2			NUT, Hex Lock (Not Serviced)

MODEL CODES:

72=2 DR Wagon
74=4 DR Wagon
77=Open Body 93" Whlbase
78=Open Body 103" Whlbase - Export
T=2WD
J,N=4WD
U=4WD (RHD)

BODY STYLES:

YJ=Wrangler (4X4) "S"
Weangler (4X4) SE
Wrangler (4X4) Sahara
Wrangler (4X4) Renegade
XJ=Cherokee SE
Cherokee Sport
Cherokee Country
ZJ=Grand Cherokee SE
Grand Cherokee Laredo
Grand Cherolee Limited
ZG=Grand Cherokee European
Y1=Wrangler
X1=Cherokee
Z1=Grand Cherokee
KDX=Vehicles

AR = Use as Required - = Non Illustrated Part P.A.R. = Paint as Required

« RETURN TO GROUP INDEX

BOOSTER AND MASTER CYLINDER U.S. AND CANADA, W/O ANTI-LOCK CHEROKEE
Figure 5-320

5-320

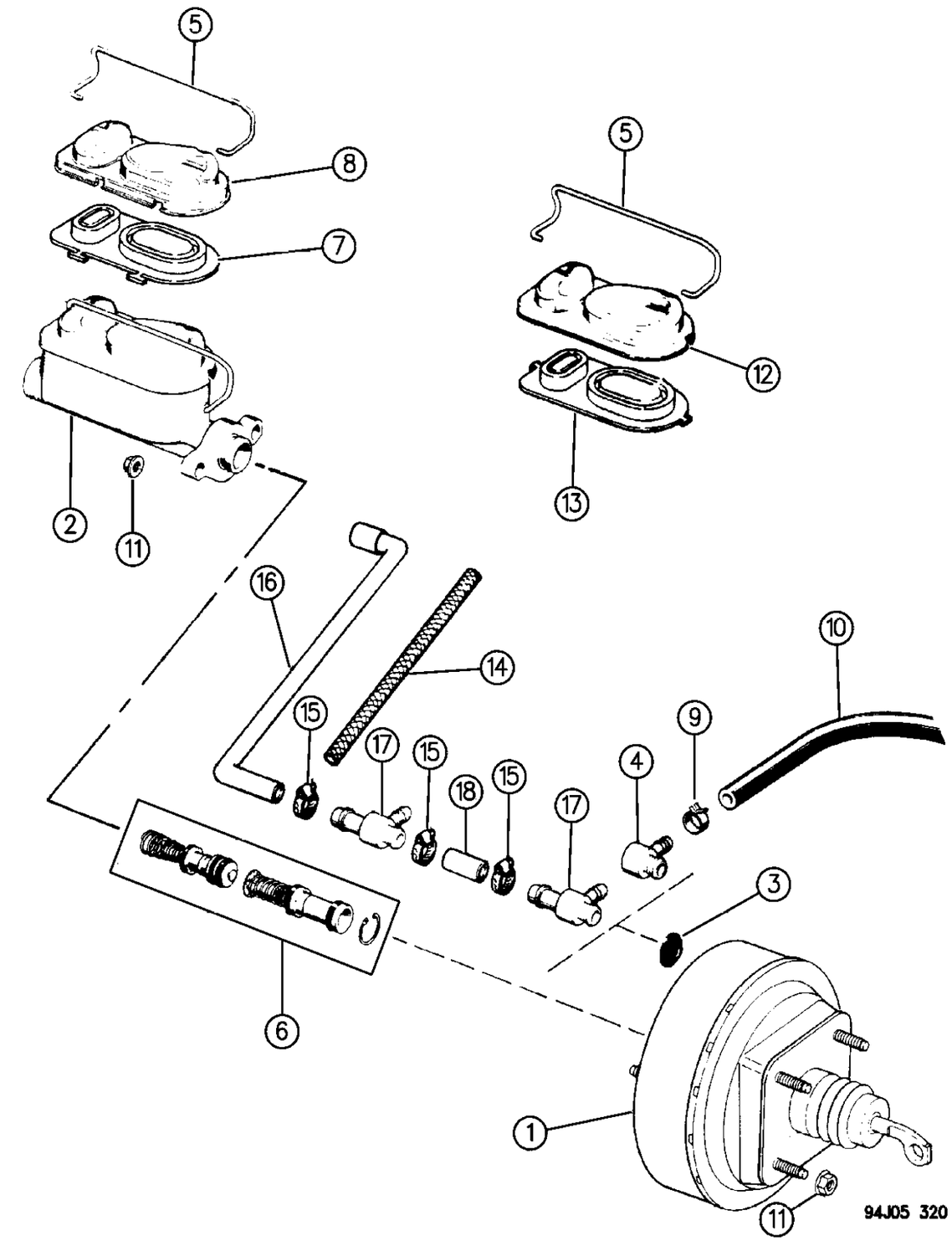

ITEM	PART NUMBER	QTY	BODY	MODEL	DESCRIPTION
1					BOOSTER, Brake
	4637 769	1			1994
	4761 782	1			Diesel Eng., 1995-96
	4761 788	1			Gas Eng., 1995-96
2					CYLINDER, Brake Master
	5252 622	1			1994
	4761 941	1			1995-96
-	4761 942	1			RESERVOIR, 1995-96
3	J320 8510	1			GROMMET, Valve
4	J448 7455	1			VALVE, Check
5	J813 3910	1			RETAINER
6		1			REPAIR PACKAGE, Master Cylinder (Use Assembly)
7					GASKET
	8350 4455	1			1994
	4761 944	2			1995-96
8					COVER
	8350 4454	1			1994
	4761 944	2			1995-96
9					CLAMP, Hose
	J320 3076	1			Gas Engine
10					HOSE, Vacuum
	5200 6966	1			4 Cylinder Gas Engine
	5200 6967	1			6 Cylinder Engine
11	J400 3909	6			NUT
12	J813 3911	1			COVER
13	J813 3912	1			GASKET
14	3200 1056	1			SLEEVE
15	3300 0784	3			CLAMP, Hose
16	5200 7785	1			HOSE, Vacuum
17	4886 480AA	2			VALVE, Check
18	5200 2458	1			CONNECTOR

MODEL CODES:

72=2 DR Wagon
74=4 DR Wagon
77=Open Body 93" Whlbase
78=Open Body 103" Whlbase - Export
T=2WD
J,N=4WD
U=4WD (RHD)

BODY STYLES:

YJ=Wrangler (4X4) "S"
Weangler (4X4) SE
Wrangler (4X4) Sahara
Wrangler (4X4) Renegade
XJ=Cherokee SE
Cherokee Sport
Cherokee Country
ZJ=Grand Cherokee SE
Grand Cherokee Laredo
Grand Cherolee Limited
ZG=Grand Cherokee European
Y1=Wrangler
X1=Cherokee
Z1=Grand Cherokee
KDX=Vehicles

AR = Use as Required - = Non Illustrated Part P.A.R. = Paint as Required

« RETURN TO GROUP INDEX

BOOSTER AND MASTER CYLINDER EXPORT, W/O ANTI-LOCK CHEROKEE
Figure 5-330

5-330

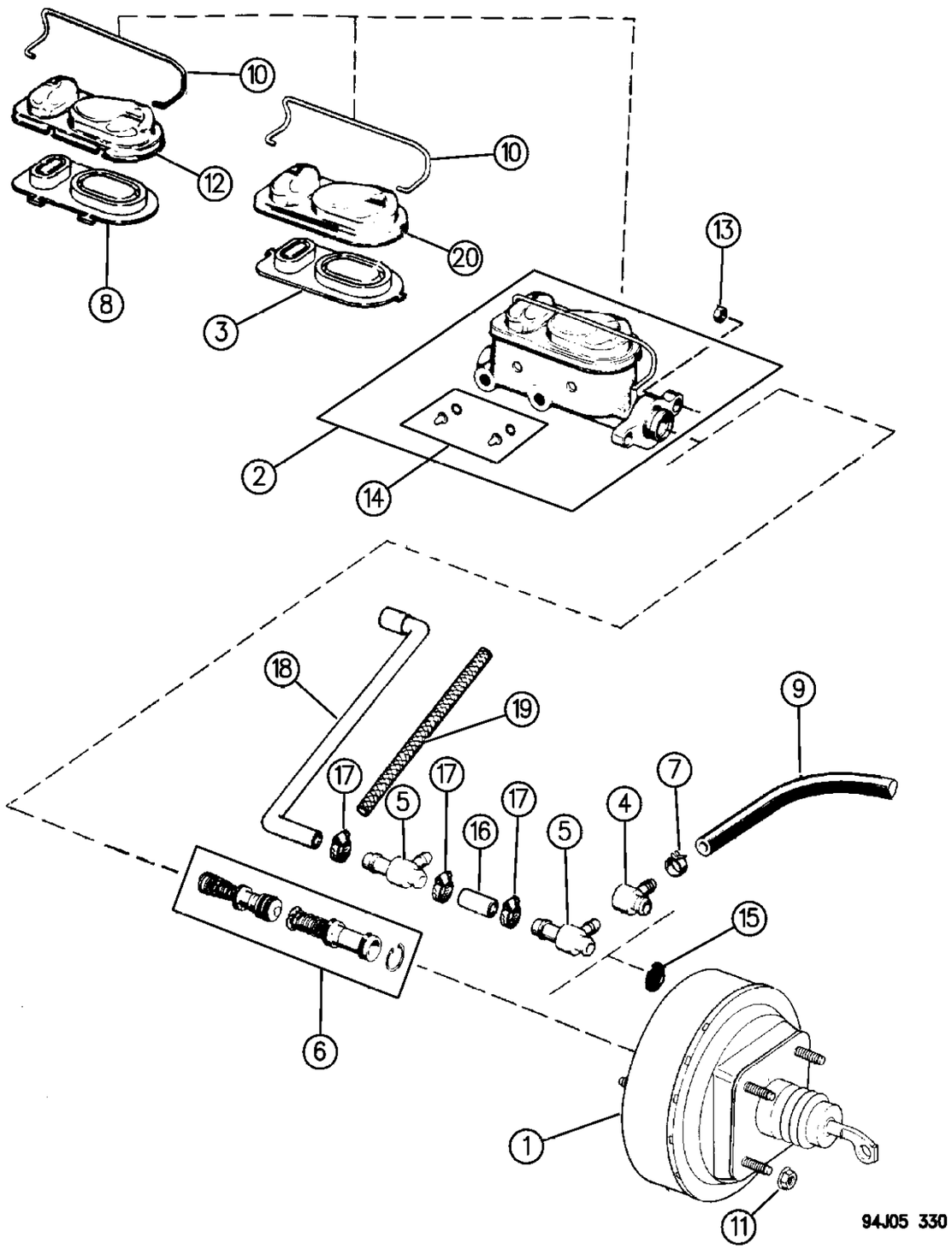

ITEM	PART NUMBER	QTY	BODY	MODEL	DESCRIPTION
1					BOOSTER, BRAKE
	8350 1533	1			Gas, 1994
	4761 788	1			Gas, 1995-96
	8350 5610	1			Diesel, 1994
	4761 782	1			Diesel, 1995-96
2					CYLINDER, BRAKE MASTER
	5252 623	1			Gas, 1994
	5252 624	1			Diesel, 1994
	4761 941	1			Gas & Diesel 1995-96
3	J813 3912	1			GASKET
4	J448 7455	1			VALVE, Check, Gas
5	8350 1532	1			VALVE, Check, Diesel
6	5252 625	1			REPAIR KIT, Master Cylinder
7					CLAMP, HOSE
	J320 3076	1			Gas
	J321 9466	1			Diesel
8	8350 4455	1			GASKET
9					HOSE, VACUUM
	5200 8327	1			RHD
					LHD
	5200 6966	1			2.5L Engine
	5200 6967	1			4.0L Engine
10	J813 3910	1			RETAINER
11	J400 3909	4			NUT
12	8350 4454	1			COVER
13	J400 3909	2			NUT
14	8350 0142	1			GLASS, Sight - Europe
15	J320 8510	1			GROMMET, Valve
16	5200 2458	1			CONNECTOR, Diesel
17	3300 0784	3			CLAMP, Hose, Diesel
18	5200 7785	1			HOSE, Vacuum, Diesel
19	3200 1056	1			SLEEVE, Diesel
20	J813 3911	1			COVER

MODEL CODES:

72=2 DR Wagon
74=4 DR Wagon
77=Open Body 93" Whlbase
78=Open Body 103" Whlbase - Export
T=2WD
J,N=4WD
U=4WD (RHD)

BODY STYLES:

YJ=Wrangler (4X4) "S"
Weangler (4X4) SE
Wrangler (4X4) Sahara
Wrangler (4X4) Renegade
XJ=Cherokee SE
Cherokee Sport
Cherokee Country
ZJ=Grand Cherokee SE
Grand Cherokee Laredo
Grand Cherolee Limited
ZG=Grand Cherokee European
Y1=Wrangler
X1=Cherokee
Z1=Grand Cherokee
KDX=Vehicles

AR = Use as Required - = Non Illustrated Part P.A.R. = Paint as Required

« RETURN TO GROUP INDEX

BOOSTER AND MASTER CYLINDER ANTI-LOCK CHEROKEE, GRAND CHEROKEE
Figure 5-340

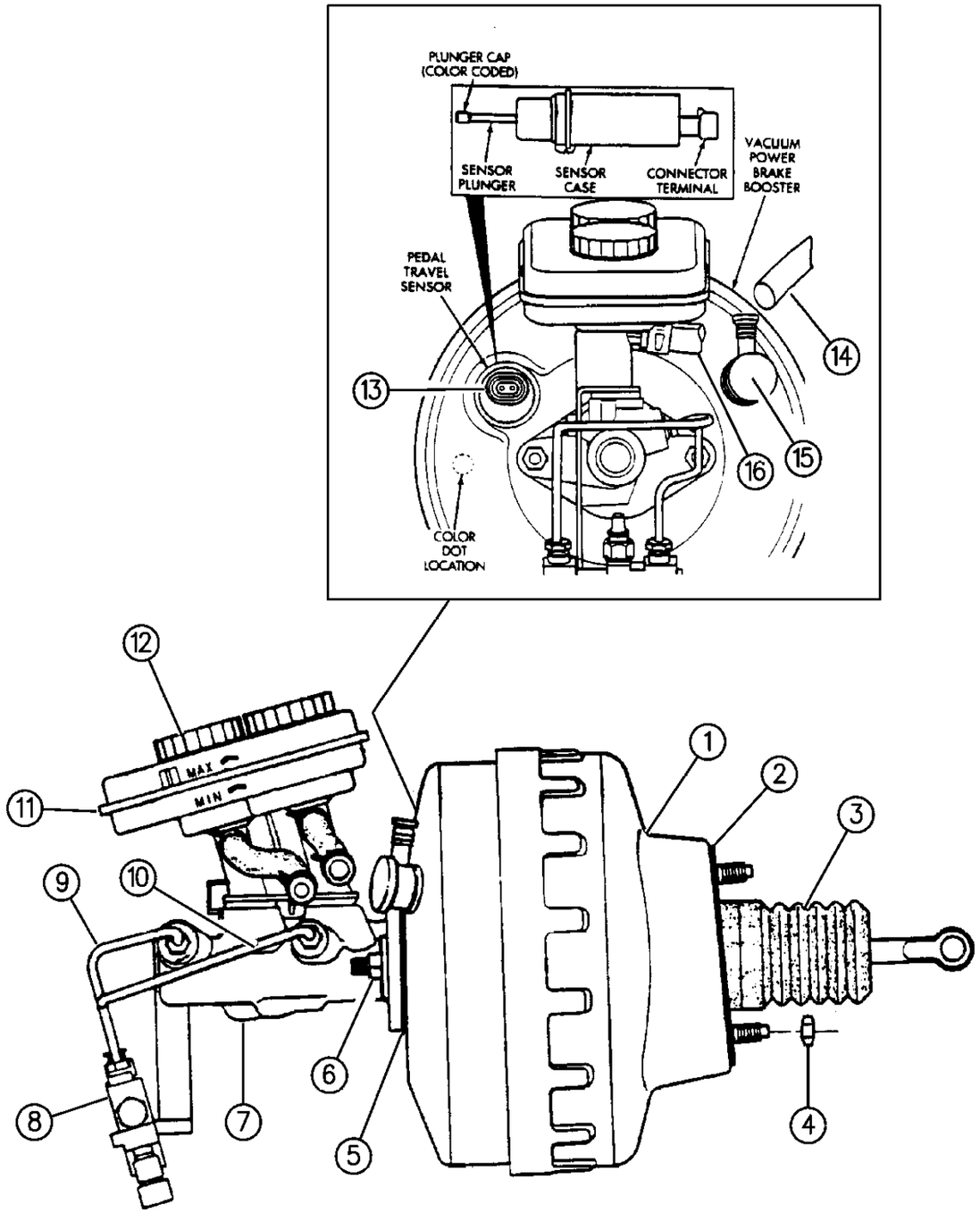

ITEM	PART NUMBER	QTY	BODY	MODEL	DESCRIPTION
1					BOOSTER PACKAGE, Brake
	4713 075	1	XJ		1994
	4761 788	1	XJ		1995-96
	4720 868	1	ZJ		Rear Drum, 1994
	4762 163	1	ZJ		Rear Disc 1994
	4856 097	1	ZG		Rear Disc 1996
	4761 786	1	ZJ		Rear Disc, w/Gas Eng. 1995-96
	4761 779	1	ZJ		Rear Disc, w/Diesel Eng. 1995-96
2	4720 898	1			SEAL, Booster to Dash
3	4720 871	1			BOOT, Booster Push Rod
4	J400 3909	4			NUT, Hex (3/8-16)
5	4713 103	1			SEAL, M/Cyl. to Booster
6	1150 2811	2			NUT, Master Cylinder to Booster
7					MASTER CYLINDER and RESERVOIR ASSEMBLY, Brake ***
	4741 835	1	XJ		1994
	4761 941	1	XJ		1995-96
	4741 835	1	ZJ		Rear Drum, 1994
	4762 164	1	ZJ		Rear Disc, 1994
	4761 941	1	ZJ		Rear Disc, 1995-96
8					COMBO VALVE PACKAGE, Includes Mounting Bracket ***
	5200 8650	1	XJ		9" Rear Brakes, LHD 1994
	5212 8035	1	XJ		9" Rear Brakes, LHD 1995-6
	5200 8651	1	XJ		9" Rear Brakes, RHD
	5200 9112	1	XJ		10" Rear Brakes, LHD, w/Police Pkg. (AHB)
		1	ZJ		(See Illus. 550)
	6100 149	1			SCREW, Combo Valve & Bracket Mounting
9					TUBE ASSEMBLY, M/CYL. to Combo Valve (Secondary) ***
	5200 7783	1	XJ		1994
	5200 8512	1	XJ		1995-96
	5200 9040	1	ZJ		1994
	5200 8939	1	ZJ		1995-96
10					TUBE ASSEMBLY, M/CYL. to Combo Valve (Primary) ***
	5200 7782	1	XJ		1994
	5200 8513	1	XJ		1995-96
	5200 8332	1	ZJ		1994 ***
	5200 8603	1	ZJ		1995-96 ***
11					RESERVOIR ASSEMBLY, (Serviced in Item #7) ***
	4761 615	1	XJ		LHD, 1994
	4761 735	1	XJ		RHD, 1994
	4761 942	1	XJ		1995-96
	4761 738	1	ZJ		1994
	4761 942	1	ZJ		1995-96

MODEL CODES:

72=2 DR Wagon
74=4 DR Wagon
77=Open Body 93" Whlbase
78=Open Body 103" Whlbase - Export
T=2WD
J,N=4WD
U=4WD (RHD)

BODY STYLES:

YJ=Wrangler (4X4) "S"
Weangler (4X4) SE
Wrangler (4X4) Sahara
Wrangler (4X4) Renegade
XJ=Cherokee SE
Cherokee Sport
Cherokee Country
ZJ=Grand Cherokee SE
Grand Cherokee Laredo
Grand Cherolee Limited
ZG=Grand Cherokee European
Y1=Wrangler
X1=Cherokee
Z1=Grand Cherokee
KDX=Vehicles

AR = Use as Required - = Non Illustrated Part P.A.R. = Paint as Required

BOOSTER AND MASTER CYLINDER ANTI-LOCK CHEROKEE, GRAND CHEROKEE
Figure 5-340

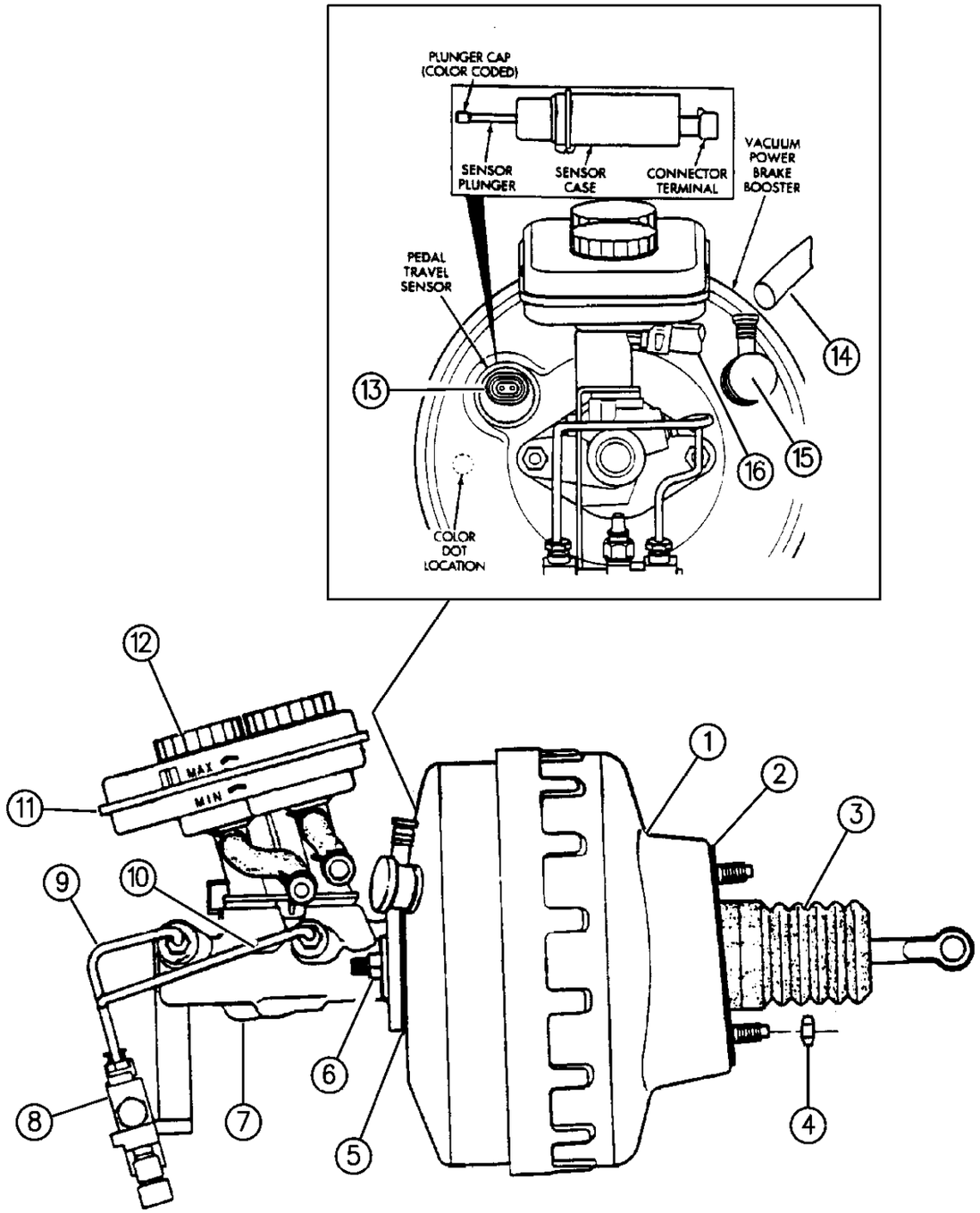

ITEM	PART NUMBER	QTY	BODY	MODEL	DESCRIPTION
12					CAP ASSEMBLY, Reservoir ***
	4762 385	2	XJ		1994
	4761 944	1	XJ		1995-96
	4713 079	2	ZJ		1994
	4761 944	1	ZJ		1995-96
13	4713 078	1			SENSOR PACKAGE, Brake Pedal Travel ***
					Consist of:
					01-------Sensor
					01-------O'Ring
					01-------Spring Clip
					AR-------Plungers, (White, Green, Blue, Red)
14					HOSE, Check Valve
	5200 7364	1	XJ		LHD
	5200 8761	1	XJ		RHD
	5200 7508	1	ZJ		4.0L Engine, 1994
	4509 135	1	ZJ		4.0L Engine, 1995-96
	5200 7512	1	ZJ		5.2L Engine, 1994
	5200 8569	1	ZJ		5.2L Engine, 1995-96
	5212 8210	1	ZG		
15	4713 085	1			VALVE PACKAGE, Check
16					HOSE PACKAGE, M/Cyl.to HCU (Includes; Primary and Secondary Hoses and 4 Clamps) ***
	4713 080	1	XJ	LHD	
	4762 386	1	XJ	RHD	
	4720 869	1	ZJ		
	5200 7898	AR	ZJ		CLAMP, Hose to M/Cyl. Resv. Primary and Secondary
	6502 491	AR	XJ		CLAMP, Hose to M/Cyl. Resv. Primary and Secondary
	5200 8277	1	XJ	RHD	CLAMP, Hose to M/Cyl. Resv. Brake Actuation
	4713 327	2			SEAL, Resv. to Master Cylinder
		1			NUT, Self Lock M/Cylinder to Booster M8x1.25 (Not Serviced)

MODEL CODES:

72=2 DR Wagon
74=4 DR Wagon
77=Open Body 93" Whlbase
78=Open Body 103" Whlbase - Export
T=2WD
J,N=4WD
U=4WD (RHD)

BODY STYLES:

YJ=Wrangler (4X4) "S"
Weangler (4X4) SE
Wrangler (4X4) Sahara
Wrangler (4X4) Renegade
XJ=Cherokee SE
Cherokee Sport
Cherokee Country
ZJ=Grand Cherokee SE
Grand Cherokee Laredo
Grand Cherolee Limited
ZG=Grand Cherokee European
Y1=Wrangler
X1=Cherokee
Z1=Grand Cherokee
KDX=Vehicles

AR = Use as Required - = Non Illustrated Part P.A.R. = Paint as Required

HYDRAULIC CONTROL UNIT ANTI-LOCK WRANGLER, YJ
Figure 5-410

5-410

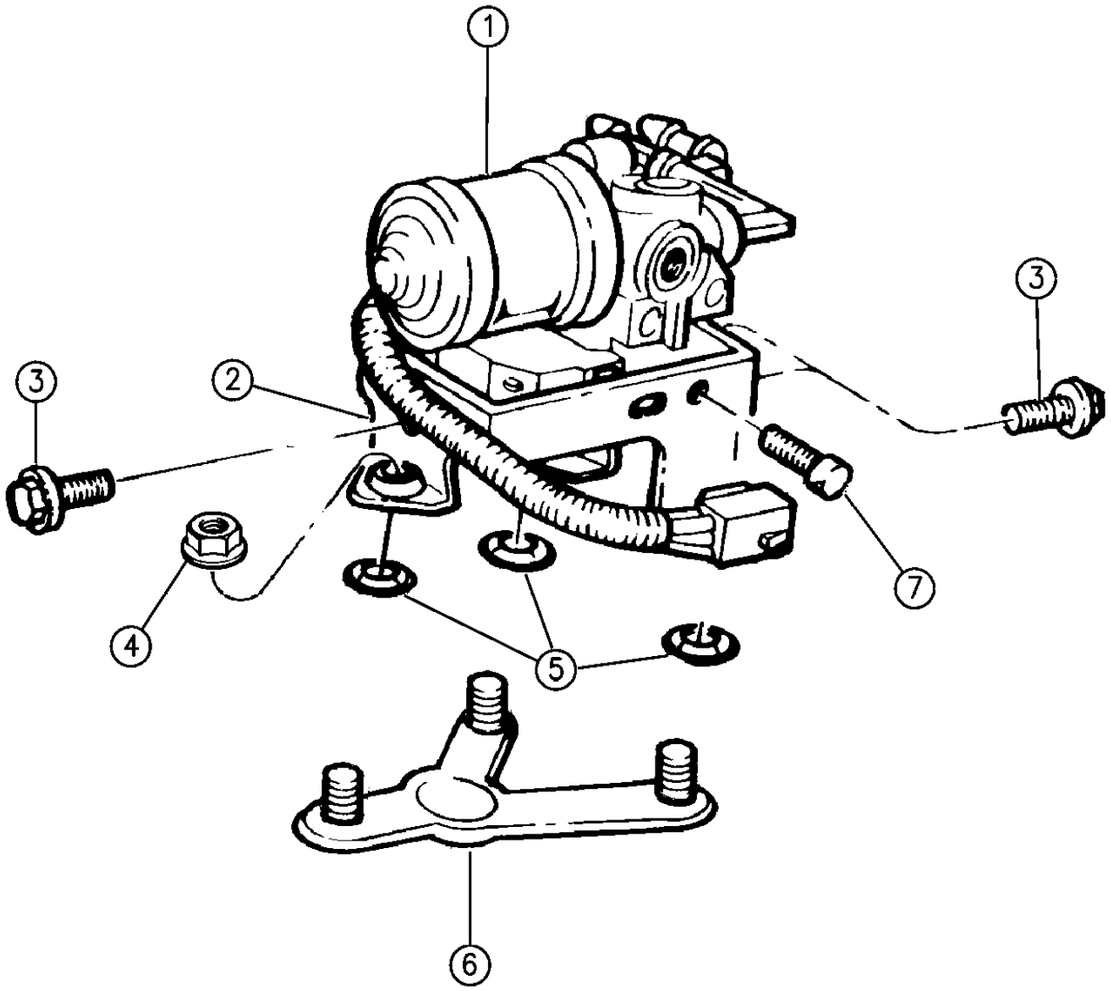

94J05 410

ITEM	PART NUMBER	QTY	BODY	MODEL	DESCRIPTION
NOTE: For Anti-Lock Brake Awareness Video Tape Use Part# 52008713.					
1					HYRAULIC CONTROL UNIT-ABS ***
	4713 317	1			1994
	4773 629	1			1995
-	4713 081	1			ELBOW KIT, Hose To Booster ***
2	5200 7934	1			BRACKET, HCU Mounting-ABS
	5200 7561	6			ISOLATOR, HCU Bracket ***
	5200 7709	3			SLEEVE, HCU Bracket
3	5200 7708	3			BOLT
4	6501 279	2			NUT, w/Washer HCU to Wheelhouse Stud Plate
5	J400 0235	3			NUT, Push
6	5200 7997	1			BRACKET, Stud Plate
		2			NUT/SPRG, Push On Type Pt 5 Tee (Not Serviced) ***
		AR			CLIP, Insulator Mount (Service in Assembly)
7					SCREW, Not Serviced

MODEL CODES:

72=2 DR Wagon
74=4 DR Wagon
77=Open Body 93" Whlbase
78=Open Body 103" Whlbase - Export
T=2WD
J,N=4WD
U=4WD (RHD)

BODY STYLES:

YJ=Wrangler (4X4) "S"
Weangler (4X4) SE
Wrangler (4X4) Sahara
Wrangler (4X4) Renegade
XJ=Cherokee SE
Cherokee Sport
Cherokee Country
ZJ=Grand Cherokee SE
Grand Cherokee Laredo
Grand Cherolee Limited
ZG=Grand Cherokee European
Y1=Wrangler
X1=Cherokee
Z1=Grand Cherokee
KDX=Vehicles

AR = Use as Required - = Non Illustrated Part P.A.R. = Paint as Required

HYDRAULIC CONTROL UNIT ANTI-LOCK CHEROKEE, GRAND CHEROKEE
Figure 5-420

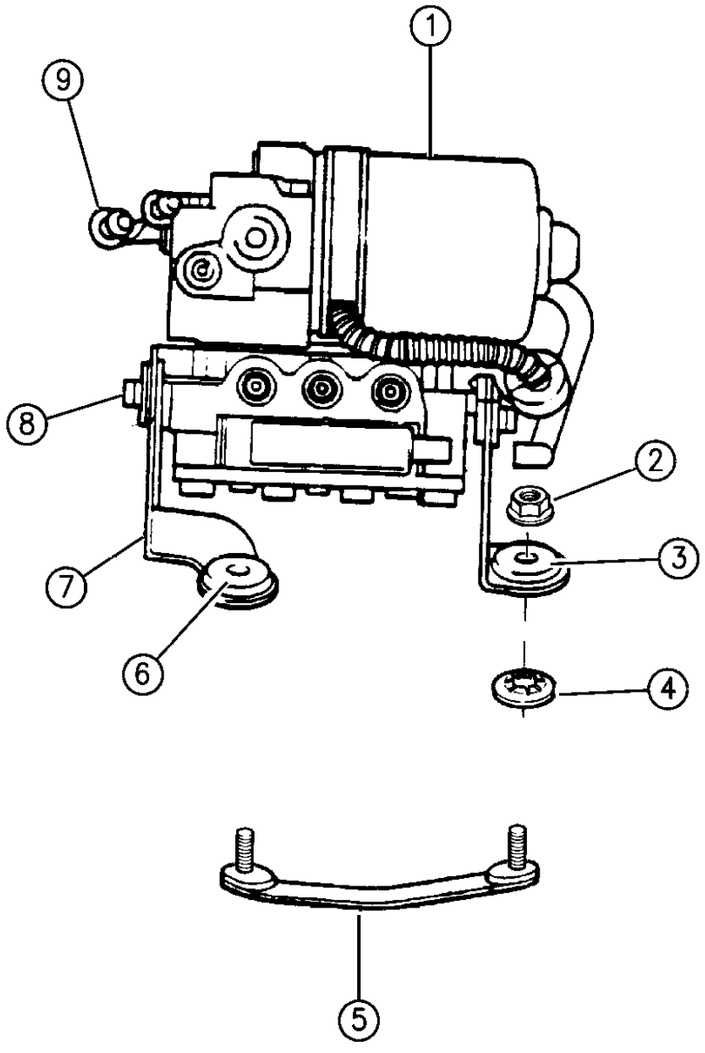

94J05 420

ITEM	PART NUMBER	QTY	BODY	MODEL	DESCRIPTION
NOTE: Far Anti-Lock Brake Awareness Video Tape Use Part# 52008713.					
1					HYRAULIC CONTROL UNIT ***
	4713 317	1	XJ	LHD	1994
	4773 629	1	XJ	LHD	1995
	4741 280	1	XJ	RHD	1994
	4773 629	1	XJ	RHD	1995
	5200 8727	1	XJ		1996
	4723 132	1	ZJ		w/Rear Drums
	4762 165	1	ZJ		w/Rear Disc. Brakes 1993-4
	4773 628	1	ZJ		1995
	5200 8728	1	ZJ,ZG		1996
2					NUT, Hex
	3420 1711	2	XJ		
	3420 1711	3	ZJ		
	6100 929	1	XJ		BOLT, M8x1.25x45
3	5200 7561	6			ISOLATOR, HCU Mounting Bracket ***
	6016 411	1	XJ		CLIP, Insul. Mount HCU Motor
4		2			NUT, Push (DNS)
5					STUD PLATE, HCU Bracket Support ***
	5200 8230	1	XJ		
	5200 7868	1	ZJ		
6	5200 7709	3			SLEEVE, HCU Mounting Bracket Isolator
7					BRACKET, HCU Mounting
	5200 7794	1	XJ	LHD	
	5200 8322	1	XJ	RHD	Lower
	5200 8087	1	XJ	RHD	Upper
	5200 8215	1	ZJ		1994
	5200 8725	1	ZJ		1995-96
	5603 6886	1	ZJ		1996
-	5200 8216	1	ZJ		BUMPER, Bracket
8	5200 7708	3			SCREW, 1994
	5200 8613	3			1995-96
9					ELBOW PACKAGE ***
	4713 081	1	XJ	LHD	
	4762 388	1	XJ	RHD	
	4720 870	1	ZJ		
-	5603 6902	1	ZG		SLEEVE, Distance

MODEL CODES:

72=2 DR Wagon
74=4 DR Wagon
77=Open Body 93" Whlbase
78=Open Body 103" Whlbase - Export
T=2WD
J,N=4WD
U=4WD (RHD)

BODY STYLES:

YJ=Wrangler (4X4) "S"
Weangler (4X4) SE
Wrangler (4X4) Sahara
Wrangler (4X4) Renegade
XJ=Cherokee SE
Cherokee Sport
Cherokee Country
ZJ=Grand Cherokee SE
Grand Cherokee Laredo
Grand Cherolee Limited
ZG=Grand Cherokee European
Y1=Wrangler
X1=Cherokee
Z1=Grand Cherokee
KDX=Vehicles

AR = Use as Required - = Non Illustrated Part P.A.R. = Paint as Required

BRAKE LINES AND HOSES W/O ANTI-LOCK WRANGLER, YJ
Figure 5-510

5-510

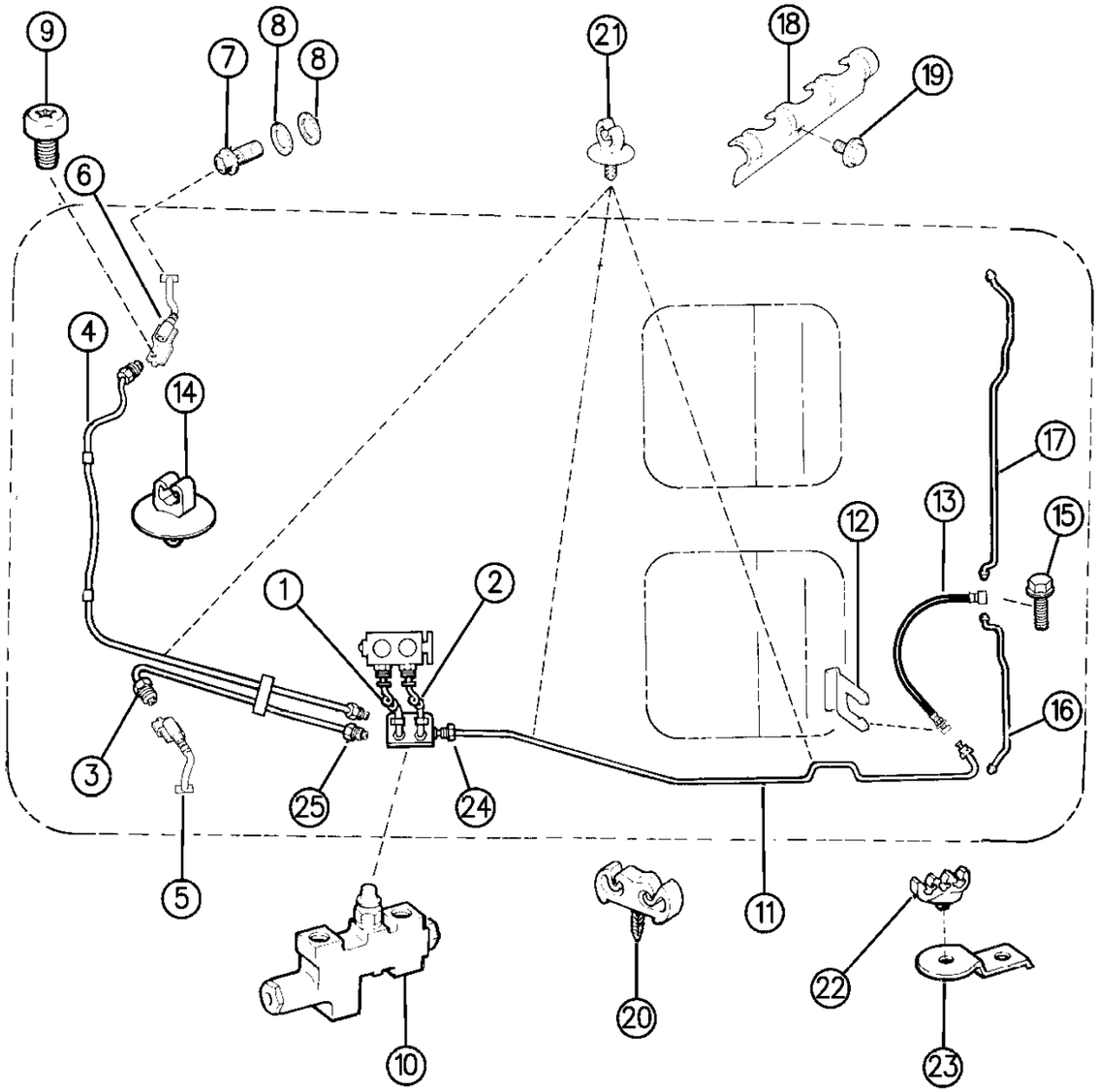

ITEM	PART NUMBER	QTY	BODY	MODEL	DESCRIPTION
1	5200 5861	1			LINE, Brake 1994
	5200 5861	1			w/2.5L Eng.,1995
	5285 0071	1			w/4.0L Eng.,1995
	5200 8886	1			Jumper RHD (XDT)
2	5204 0159	1			LINE, Brake 1994
	5204 0159	1			w/2.5L Eng.,1995
	5285 0072	1			w/4.0L Eng.,1995
	5207 9190	1			Jumper RHD (XDT) ***
3	5204 0169	1			LINE, Brake
4	5204 0168	1			LINE, Brake
5	5200 6473	1			HOSE, Brake Up to 2-14-94
	5200 8779	1			After 2-14-94
6	5200 6472	1			HOSE, Brake Up to 2-14-94
	5200 8778	1			After 2-14-94
7	J400 6700	2			BOLT
8	J323 7672	4			GASKET
9	3420 1670	2			SCREW
10	5200 9115	1			VALVE, Proportioning
	5200 9114	1			KDX
	5200 8883	1			RHD (XDT)
11					LINE, Brake
	5204 0172	1		77	
	5200 2814	1		78	KDX, Export
12	2208 893	1			CLIP
13	5200 4152	1			HOSE, Brake w/Brass Tee Block
14	J400 7396	2			CLIP
15	4137 696	1			SCREW, Rear Axle Vent & Tee Mounting
16	5200 8283	1			LINE, Brake
	5204 0173	1			KDX
17	5200 8282	1			LINE, Brake
	5200 3750	1			KDX
	3879 283	AR			COVER, Brake Tube, 3/16" O.D., 25 Ft. Roll, KDX-Egypt, Venezuela
18	J323 4854	1			CLIP
19	3420 1912	2			SCREW
20	5200 2044	1			CLIP
21	3200 0404	3			CLIP
22	5300 1242	1			CLIP
23	5200 8458	1			BRACKET
24	J322 0009	AR			NUT, 1/2-20 (Black) Inverted Flare
25	J319 5677	AR			NUT, 3/8-24 (Gold) Inverted Flare
-	1843 251	AR			TUBING, Roll Stock 3/16"x25'

MODEL CODES:

72=2 DR Wagon
74=4 DR Wagon
77=Open Body 93" Whlbase
78=Open Body 103" Whlbase - Export
T=2WD
J,N=4WD
U=4WD (RHD)

BODY STYLES:

YJ=Wrangler (4X4) "S"
Weangler (4X4) SE
Wrangler (4X4) Sahara
Wrangler (4X4) Renegade

XJ=Cherokee SE
Cherokee Sport
Cherokee Country

ZJ=Grand Cherokee SE
Grand Cherokee Laredo
Grand Cherolee Limited
ZG=Grand Cherokee European

Y1=Wrangler
X1=Cherokee
Z1=Grand Cherokee
KDX=Vehicles

AR = Use as Required - = Non Illustrated Part P.A.R. = Paint as Required

« RETURN TO GROUP INDEX

BRAKE LINES AND HOSES (FRONT) ANTI-LOCK WRANGLER, YJ
Figure 5-520

5–520

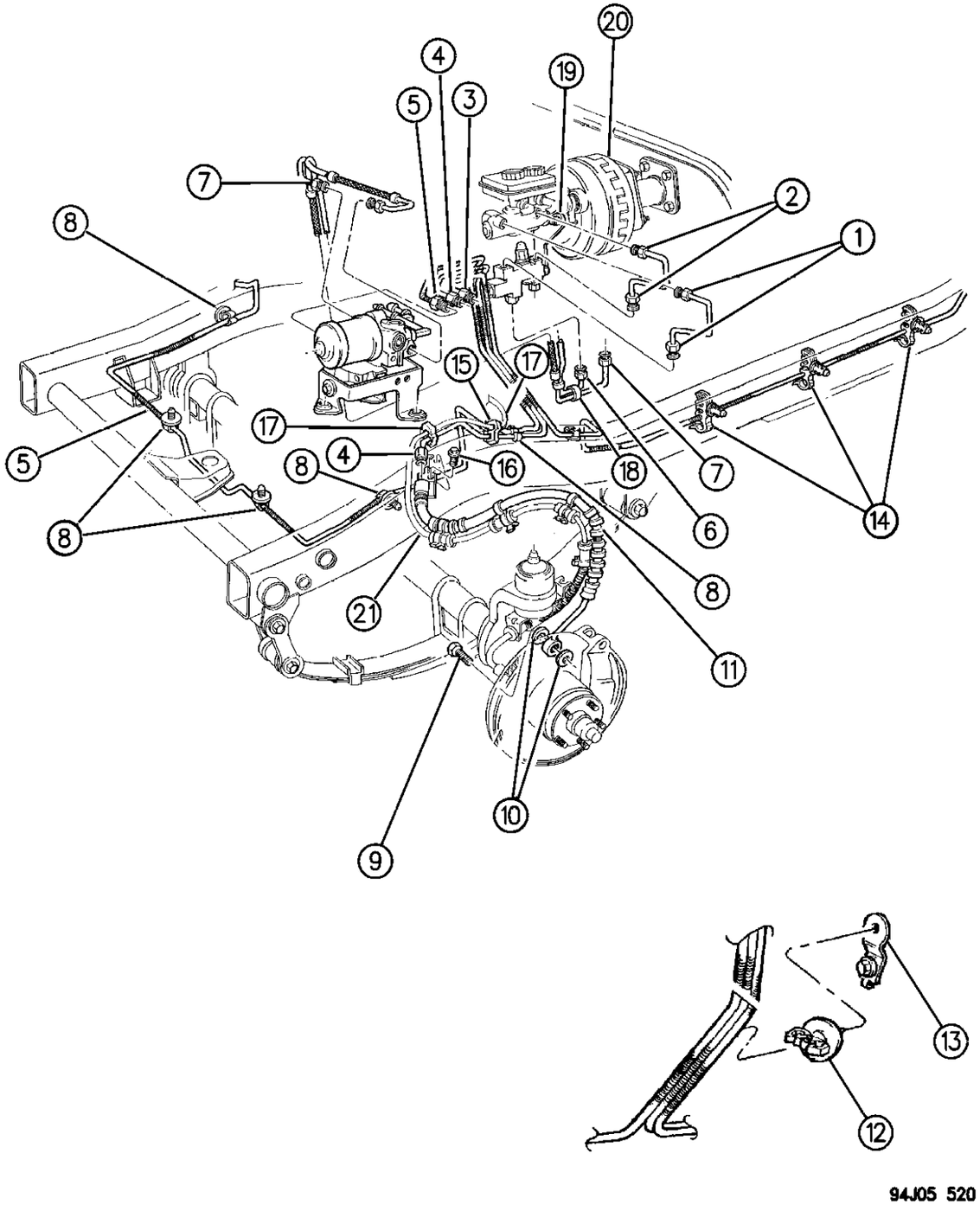

ITEM	PART NUMBER	QTY	BODY	MODEL	DESCRIPTION
1					TUBE, Master Cylinder to Prop. Valve Primary
	5200 7890	1			1994
	5200 8614	1			1995
	3200 0412	1			NUT, Brake Tube - 4.75 Dia. M12-1
2					TUBE, Master Cylinder to Prop. Valve Secondary
	5200 7891	1			1994
	5200 8615	1			1995
	3200 0410	1			NUT, Brake Tube-4.75 Dia. M10-1 Secondary
3					TUBE, HCU to Brake Rear
	5200 7965	1			1994
	5200 8617	1			1995
4					TUBE, HCU to Brake Lt. Front
	5200 7967	1			1994
	5200 8705	1			1995
		1			NUT, Inverted Flare (Not Serviced) M10x1.00x15.80
	6033 833	1			NUT, Inverted Flare Tube
5	5200 7966	1			TUBE, HCU to Brake Rt. Front, 1994
	5201 0020	1			1995
	3200 0410	1			NUT, Brake Tube 4.75 Dia. M10-1
	6033 833	1			NUT, Inverted Flared Tube
	3879 283	1			COVER, Brake Tube
6					HOSE, Prop. Valve to HCU Secondary
	5200 7895	1			1994
	5200 8577	1			1995
7					HOSE, Prop. Valve to HCU Primary
	5200 7894	1			1994
	5200 8576	1			1995
8	3200 0404	5			CLIP
9	J400 6700	2			BOLT, Front Brake Hose to Caliper
10	J323 7672	4			GASKET
11	5200 7608	1			HOSE, Front Disc Brakes Rt. Up to 2-14-94
	5200 8776	1			After 2-14-94
	5200 7609	1			Lt. Up to 2-14-94
	5200 8777	1			Lt. After 2-14-94
12	5300 1242	AR			CLIP
13	5200 8458	1			BRACKET, Brake Tube Clip to Splash Apron
14	5200 7995	4			FASTENER, Clip 5-way
15	5200 2044	AR			CLIP
16	3420 1670	2			SCREW, Front Brake Hose to Frame
17	5602 6775	9			CLIP
18	J400 6034	2			CLIP
19	5200 8359	1			BRACKET, Prop. Valve 1994

MODEL CODES:

72=2 DR Wagon
74=4 DR Wagon
77=Open Body 93" Whlbase
78=Open Body 103" Whlbase - Export
T=2WD
J,N=4WD
U=4WD (RHD)

BODY STYLES:

YJ=Wrangler (4X4) "S"
Weangler (4X4) SE
Wrangler (4X4) Sahara
Wrangler (4X4) Renegade
XJ=Cherokee SE
Cherokee Sport
Cherokee Country
ZJ=Grand Cherokee SE
Grand Cherokee Laredo
Grand Cherolee Limited
ZG=Grand Cherokee European
Y1=Wrangler
X1=Cherokee
Z1=Grand Cherokee
KDX=Vehicles

AR = Use as Required - = Non Illustrated Part P.A.R. = Paint as Required

BRAKE LINES AND HOSES (FRONT) ANTI-LOCK WRANGLER, YJ
Figure 5-520

5–520

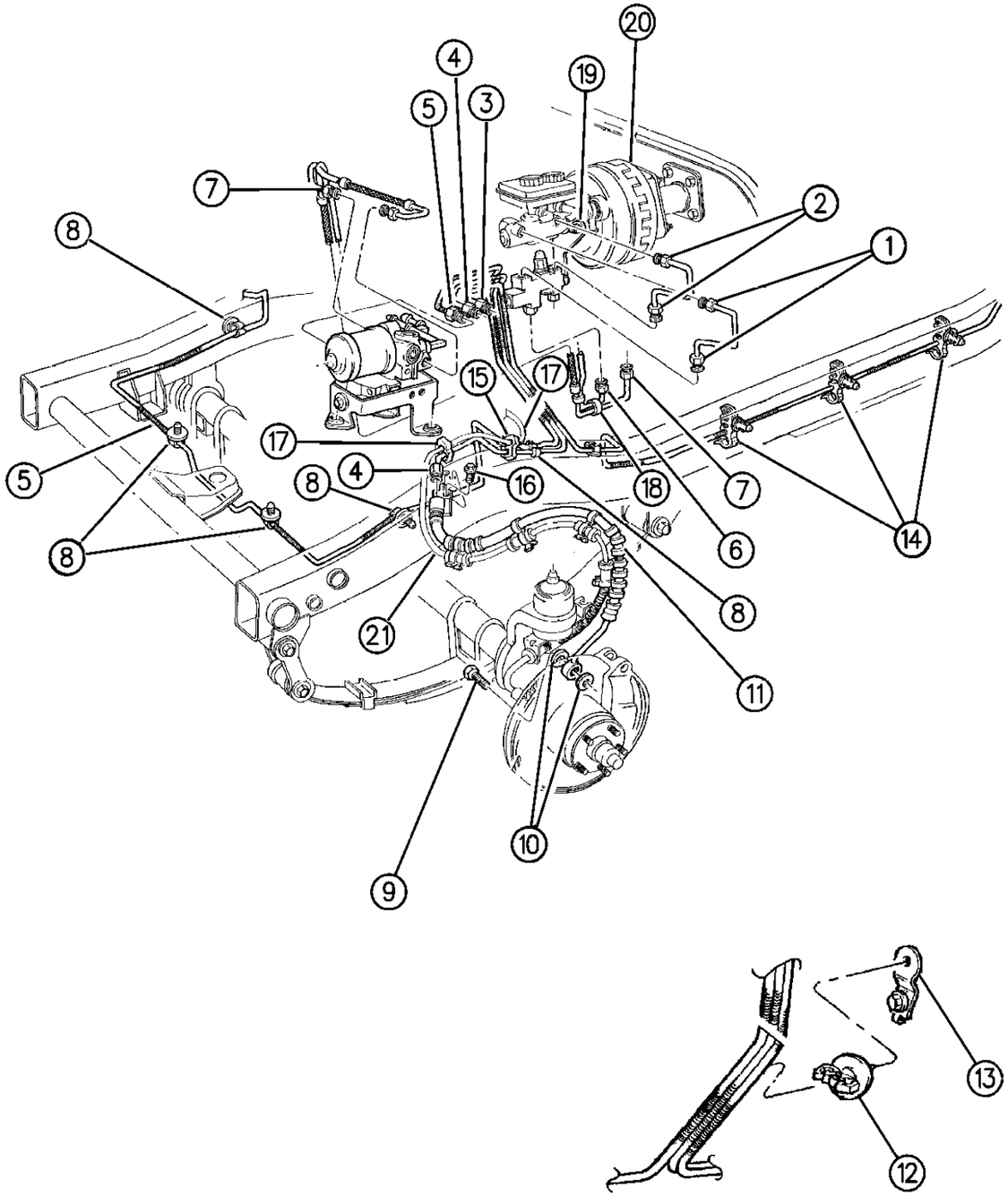

ITEM	PART NUMBER	QTY	BODY	MODEL	DESCRIPTION
-	5200 8578	1			VALVE & BRACKAET, Combination ***
20		1			MASTER CYLINDER (See Illust. #310) ***
21	5602 7724	2			SENSOR, Speed Front
	5602 6766-7	1			BRACKET, Front ABS Sensor
-	8350 4920	2			SCREW, Sensor Mounting

MODEL CODES:

72=2 DR Wagon	77=Open Body 93" Whlbase	T=2WD	U=4WD (RHD)
74=4 DR Wagon	78=Open Body 103" Whlbase - Export	J,N=4WD	

BODY STYLES:

YJ=Wrangler (4X4) "S"	XJ=Cherokee SE	ZJ=Grand Cherokee SE	Y1=Wrangler
Weangler (4X4) SE	Cherokee Sport	Grand Cherokee Laredo	X1=Cherokee
Wrangler (4X4) Sahara	Cherokee Country	Grand Cherolee Limited	Z1=Grand Cherokee
Wrangler (4X4) Renegade		ZG=Grand Cherokee European	KDX=Vehicles

AR = Use as Required - = Non Illustrated Part P.A.R. = Paint as Required

BRAKE LINES AND HOSES (REAR) ANTI-LOCK WRANGLER, YJ
Figure 5-530

5-530A

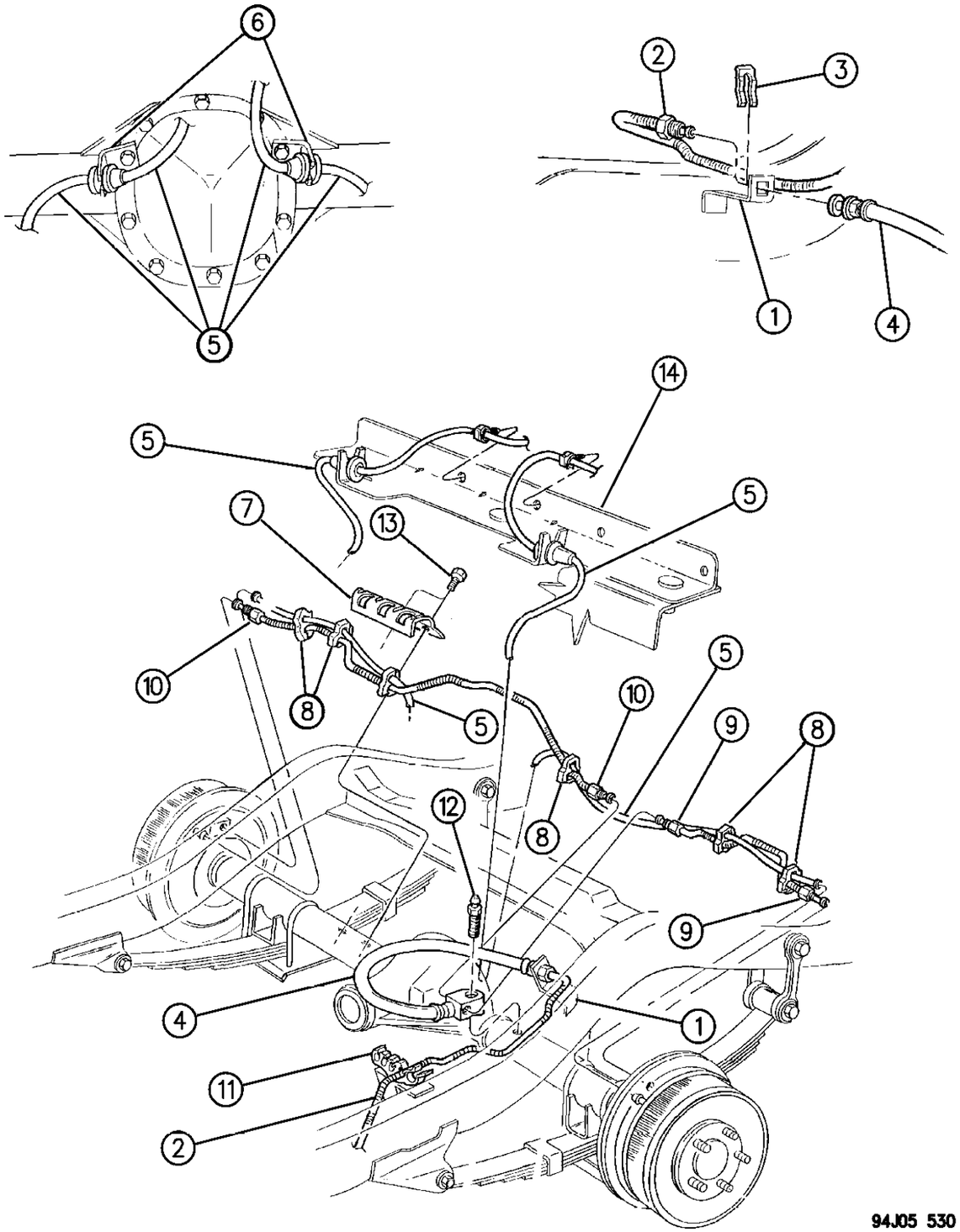

ITEM	PART NUMBER	QTY	BODY	MODEL	DESCRIPTION
1		1			BRACKET, Rear Brake Line (Service in Assembly)
2	5200 7965	1			TUBE, HCU to Brake Rear
	5200 8263	1			NUT, Rear Tube Valve
	6033 833	1			NUT, Inverted Flared Tube
3	2208 893	AR			CLIP
4	5200 4152	1			HOSE, Rear Drum Brakes
5	5200 5936	1			SENSOR, Speed Rear
6		2			BRACKET, (Service in Assembly)
7	5200 7800	AR			CLIP, Brake Tube Rear Axle Hose
8	5602 6775	9			CLIP
9	5200 8283	1			TUBE, Rear Axle to Brake Lt.
10	5200 8282	1			TUBE, Rear Axle to Brake Rt.
11	5200 7995	4			FASTENER, Clip 5 Way
12	5206 7508	AR			SCREW, Rear Axle Vent and Bracket Tee Mount
13	3420 1912	2			SCREW
14	5602 6754	2			BRACKET, Sensor ABS Fuel Tank Skid Plate
	J400 3954	3			NUT, Sensor Bracket to Skid Plate (Hex Whiz/Lock)
	5602 6753	2			BRACKET, Wheel Speed Sensor Rear Diff. Housing Clip

MODEL CODES:

72=2 DR Wagon
74=4 DR Wagon
77=Open Body 93" Whlbase
78=Open Body 103" Whlbase - Export
T=2WD
J,N=4WD
U=4WD (RHD)

BODY STYLES:

YJ=Wrangler (4X4) "S"
Weangler (4X4) SE
Wrangler (4X4) Sahara
Wrangler (4X4) Renegade
XJ=Cherokee SE
Cherokee Sport
Cherokee Country
ZJ=Grand Cherokee SE
Grand Cherokee Laredo
Grand Cherolee Limited
ZG=Grand Cherokee European
Y1=Wrangler
X1=Cherokee
Z1=Grand Cherokee
KDX=Vehicles

AR = Use as Required - = Non Illustrated Part P.A.R. = Paint as Required

BRAKE LINES AND HOSES W/O ANTI-LOCK CHEROKEE
Figure 5-540

5-540

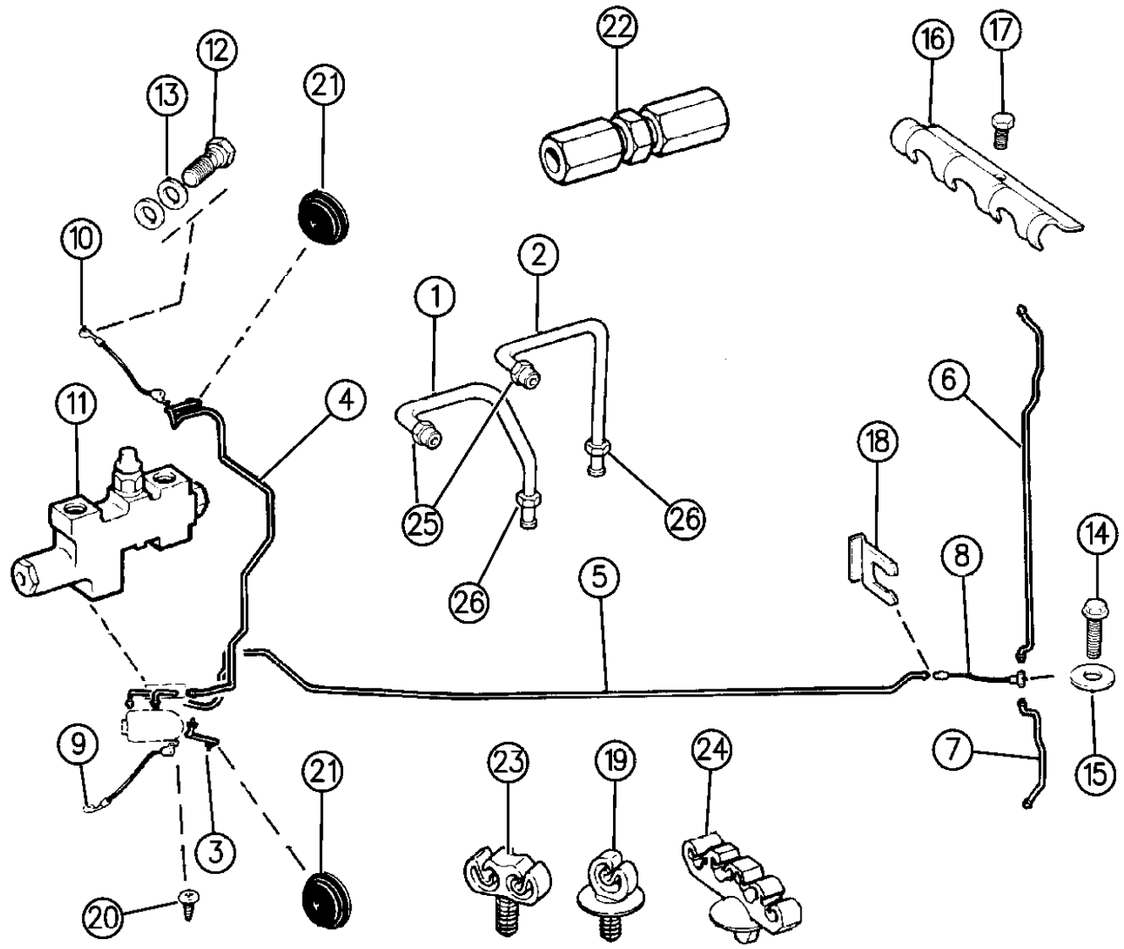

ITEM	PART NUMBER	QTY	BODY	MODEL	DESCRIPTION
1					LINE, Brake Primary
	5200 2781	1			1994
	5200 8513	1			1995-96
2					LINE, Brake Secondary
	5200 0172	1			1994
	5200 8512	1			1995-96
3	5200 7758	1			LINE, Brake 1994
	5285 0075	1			1995-96
4	5200 7757	1			LINE, Brake 1994
	5285 0074	1			1995-96
5		1			LINE, Brake (Not Serv.)
6	5200 7886	1			LINE, Brake
7	5200 5471	1			LINE, Brake
8	5200 7562	1			HOSE, Brake
9	5200 7583	1			HOSE, Brake
10	5200 7582	1			HOSE, Brake
11					VALVE, Proportioning
	5200 9115	1			1994
	5200 9120	1			1995
	5212 9025	1			1996
	5200 0097	1			1994, KDX, Venezuela
	5200 8961	1			1995, KDX, Venezuela
	5212 7921	1			1996, KDX, Venezuela
12	J400 6700	2			BOLT
13	J323 6434	4			GASKET
14	4137 696	1			SCREW, Rear Axle Vent & Tee Mounting
15	J400 1190	2			WASHER
16	J323 4854	1			CLIP
17	3420 1912	1			SCREW
18	2208 893	1			CLIP
19	3200 0404	1			CLIP
20	6502 711	2			SCREW
21	J312 6237	2			GROMMET
22	J812 6773	AR			UNION, Brake Line Repair
23	5200 2044	2			CLIP
24	5300 0585	1			CLIP
25	J322 0009	AR			NUT, 1/2-20 (Black) Inverted Flare
26	J318 7730	AR			NUT, 7/16-24 (Red) Inverted Flare

MODEL CODES:

72=2 DR Wagon
74=4 DR Wagon
77=Open Body 93" Whlbase
78=Open Body 103" Whlbase - Export
T=2WD
J,N=4WD
U=4WD (RHD)

BODY STYLES:

YJ=Wrangler (4X4) "S"
Weangler (4X4) SE
Wrangler (4X4) Sahara
Wrangler (4X4) Renegade
XJ=Cherokee SE
Cherokee Sport
Cherokee Country
ZJ=Grand Cherokee SE
Grand Cherokee Laredo
Grand Cherolee Limited
ZG=Grand Cherokee European
Y1=Wrangler
X1=Cherokee
Z1=Grand Cherokee
KDX=Vehicles

AR = Use as Required - = Non Illustrated Part P.A.R. = Paint as Required

« RETURN TO GROUP INDEX

5–550

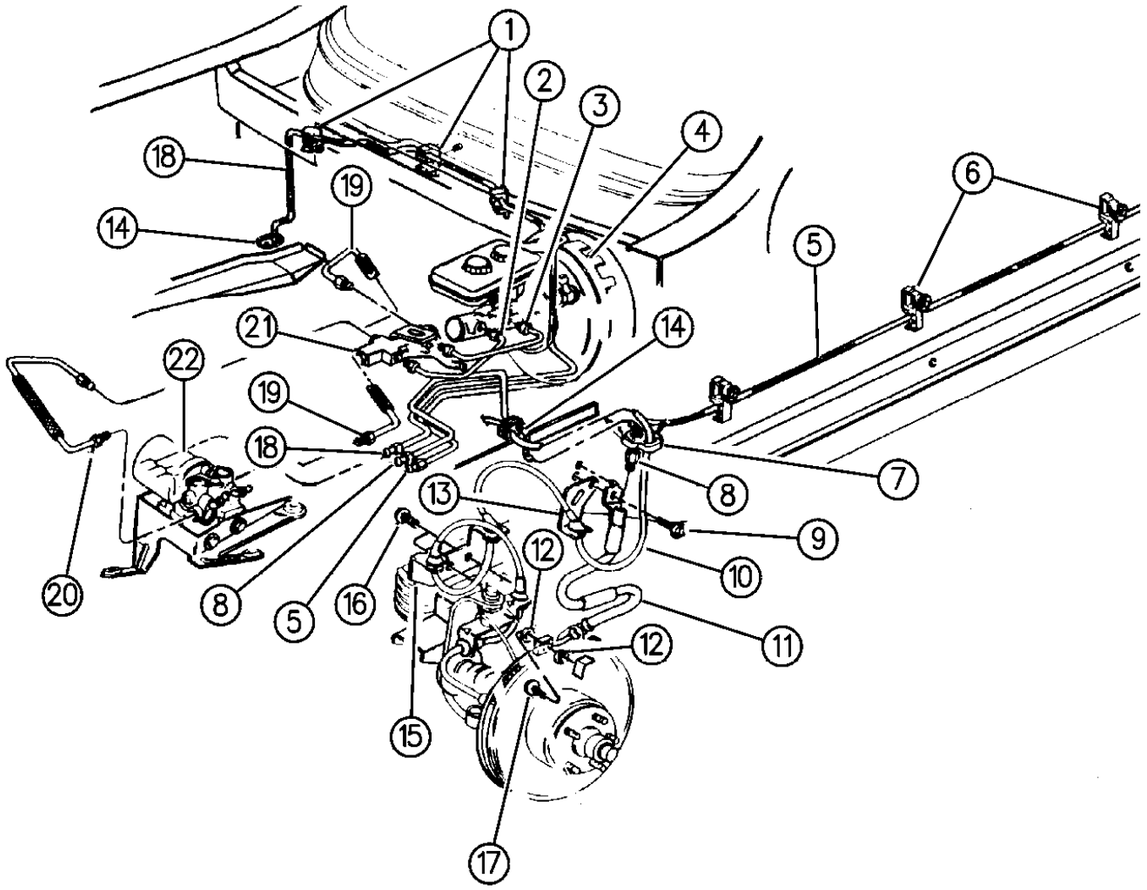

94J05 550

1					CLIP, Brake Tube Firewall
	5200 2044	2	XJ		
	5200 7854	3	ZJ		
2					TUBE ASSEMBLY, M/Cyl. to Combo Valve (Secondary) ***
	5200 7783	1	XJ		1994
	5200 8512	1	XJ		1995-96
	5200 8151	1	XJ	RHD	
	5200 8191	1	X1	RHD	
	5200 9040	1	ZJ		1994
	5200 8939	1	ZJ		1995-96
	5305 4149	1	ZG		1996
3					TUBE ASSEMBLY, M/Cyl. to Combo Valve (Primary) ***
	5200 7782	1	XJ		1994
	5200 8513	1	XJ		1995-96
	5200 8190	1	XJ,X1	RHD	
	5200 8332	1	ZJ		1994
	5200 8603	1	ZJ		1995-96
	5305 4160	1	ZG		1995
	5305 4148	1	ZG		1996
4		1			MASTER CYLINDER/BOOSTER ASSEMBLY (See ILL.#340) ***
5					TUBE ASSEMBLY, HCU to Rear Brake Hose (See Illust. #550) ***
6					CLIP
	3420 2373	6	XJ		Diesel
	5300 0585	7	XJ		
	3420 2371	6	XJ	RHD	
	5200 5116	4	ZJ		
7					CLIP
	3200 0404	2	XJ		
	5602 6775	1	ZJ		
8					TUBE ASSEMBLY, HCU to Left Front Brake Hose, 1994 ***
					(Service Component Parts) See Under Item 22 ***
	5200 9063	1	XJ		1995-96
	5200 8223	1	XJ	RHD	1994
	5200 8529	1	XJ	RHD	1995-96
	5200 9065	1	ZJ		1995-96
9	6502 711	2			SCREW, Frt. Brake Hose and ABS Sensor Brackets
10					SENSOR, ABS Front Brake
	5600 5217	2	XJ		
	5600 5216	2	ZJ		
11	5200 7582-3	1			HOSE ASSEMBLY, Front Brake Up to 8-20-93 ***
	5200 8674-5	1			After 8-20-93
12	J323 7672	4			GASKET, Front Brake Hose to Caliper

MODEL CODES:

72=2 DR Wagon	77=Open Body 93" Whlbase	T=2WD	U=4WD (RHD)
74=4 DR Wagon	78=Open Body 103" Whlbase - Export	J,N=4WD	

BODY STYLES:

YJ=Wrangler (4X4) "S"	XJ=Cherokee SE	ZJ=Grand Cherokee SE	Y1=Wrangler
Weangler (4X4) SE	Cherokee Sport	Grand Cherokee Laredo	X1=Cherokee

BRAKE LINES AND HOSES (REAR) ANTI-LOCK CHEROKEE, GRAND CHEROKEE
Figure 5-560

5–560

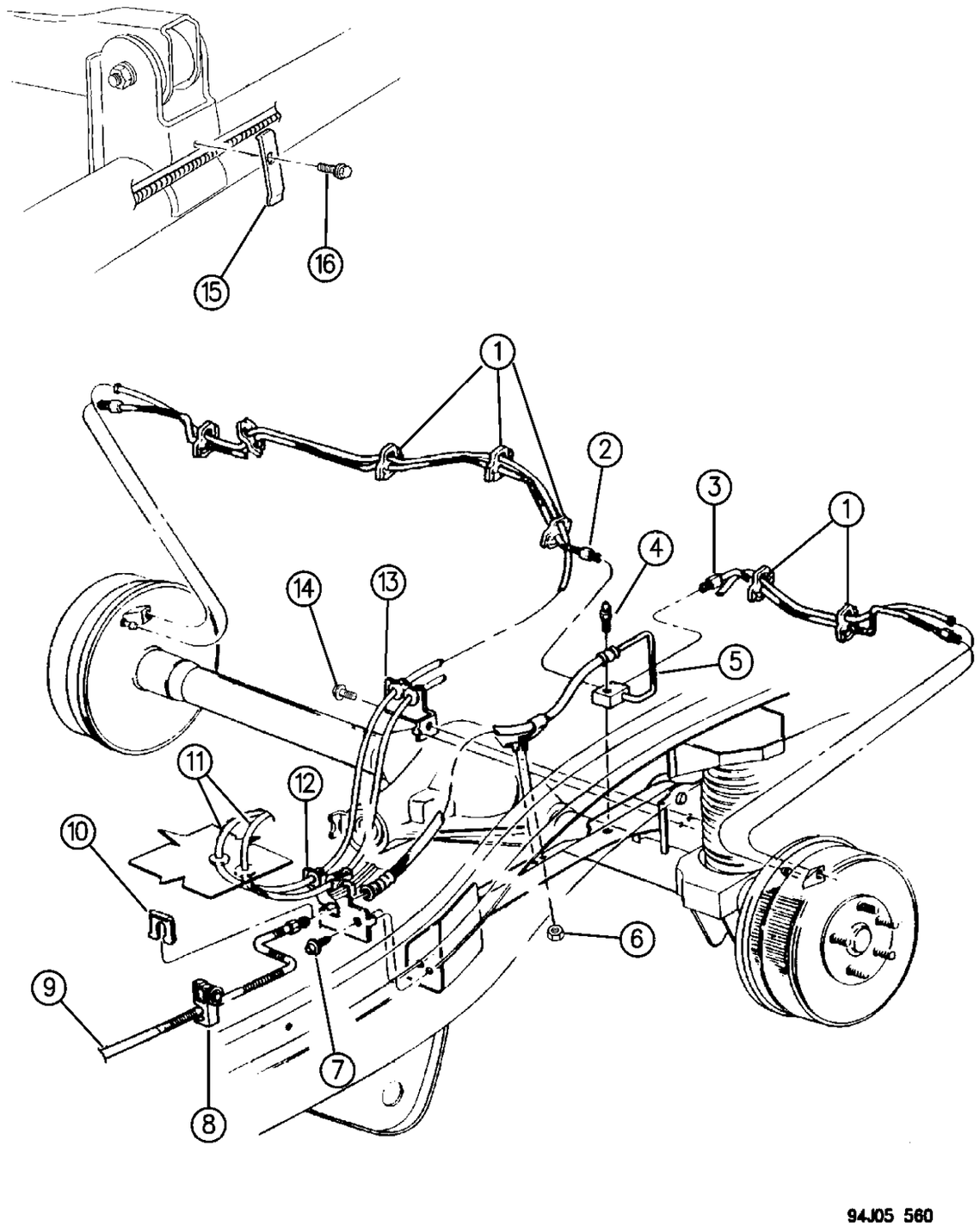

ITEM	PART NUMBER	QTY	BODY	MODEL	DESCRIPTION
1	5602 6775	7			CLIP
2					TUBE ASSEMBLY, Right Rear ***
	5200 7886	1	XJ		Dana 35 Rear Axle, 9" Brakes
	5200 7834	1	XJ		Chrysler 8 1/4 Rear Axle, 9" Brakes
	5200 8128	1	XJ		10" Brakes
	5200 7592	1	ZJ		1994 w/Rear Drum Brakes
	5200 8608	1	ZJ		1994-95 w/Rear Disc Brakes
	5212 8222	1	ZJ		1996
	5200 8604	1	Z1		Export
	5200 7800	1	XJ		CLIP, Tube Right Rear
	3420 1912	2	XJ		SCREW
3					TUBE ASSEMBLY, Left Rear ***
	5200 7887	1	XJ		Dana 35 Rear Axle, 9" Brakes
	5200 7835	1	XJ		Chrysler 8 1/4 Rear Axle, 10" Brakes
	5200 8129		XJ		10" Brakes
	5200 7507	1			1994, w/Rear Drum Brakes
	5200 8605	1	ZJ		1994, w/Rear Disc Brakes
	5200 8609	1	ZJ		1995-96
	5200 8605	1	Z1		Export
4	J318 7999	1			SCREW, Rear Brake Hose/Axle Vent 1/4 x 5/16" (Plastic)
	5206 7508	1			1/4 x 7/16" (Metal)
5					HOSE ASSEMBLY, Rear Axle ***
	5200 7562	1	XJ		
	5200 7401	1	ZJ		Body To Axle, w/Drum or Disc Rear Brakes
	5200 8662-3	1	ZJ		Axle To Caliper, w/Rear Disc Brakes
-	J400 6700	2	ZJ		BOLT, w/Rear Disc Brake
-	J323 7672	4	ZJ		WASHER, w/Rear Disc Brakes
6	6101 694	1	XJ		NUT, Rear Brake Hose
	6101 695	1	ZJ		
7	3420 2205	1			SCREW, Rear Brake Hose Bracket
8					CLIP (See Illustration #550) ***
9					TUBE ASEEMBLY, HCU to Rear Brake Hose (Service Component Parts) See Under Item 16 ***
		1	XJ		TUBE, Comb. Valve to Rear Axle Hose (Service Component Parts) See Under Item 16
		1	XJ		TUBE, Union to Rear Axle (Service Component Parts) See Under Item 16
10	2208 893	1			CLIP, Rear Brake Hose
11					SENSOR, Rear ABS
	5200 5932-3	1	XJ		
	5600 5218-9	1	ZJ		w/Rear Drum Brakes
	5602 6930-1	1	ZJ		w/Rear Disc Brakes (Up To 5-1-95)

MODEL CODES:

72=2 DR Wagon
74=4 DR Wagon
77=Open Body 93" Whlbase
78=Open Body 103" Whlbase - Export
T=2WD
J,N=4WD
U=4WD (RHD)

BODY STYLES:

YJ=Wrangler (4X4) "S"
Weangler (4X4) SE
Wrangler (4X4) Sahara
Wrangler (4X4) Renegade
XJ=Cherokee SE
Cherokee Sport
Cherokee Country
ZJ=Grand Cherokee SE
Grand Cherokee Laredo
Grand Cherolee Limited
ZG=Grand Cherokee European
Y1=Wrangler
X1=Cherokee
Z1=Grand Cherokee
KDX=Vehicles

AR = Use as Required - = Non Illustrated Part P.A.R. = Paint as Required

BRAKE LINES AND HOSES (REAR) ANTI-LOCK CHEROKEE, GRAND CHEROKEE
Figure 5-560

5–560

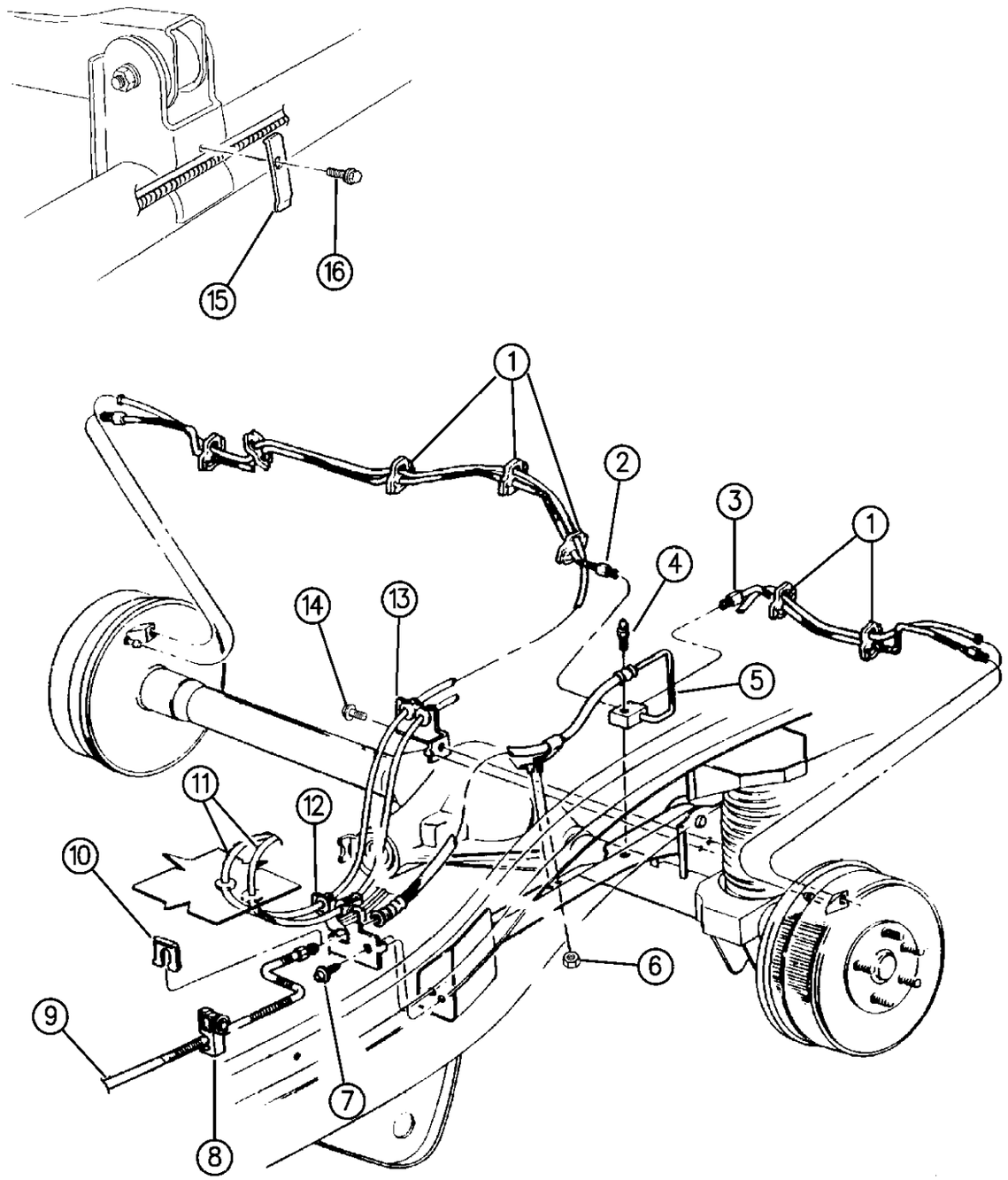

ITEM	PART NUMBER	QTY	BODY	MODEL	DESCRIPTION
	5602 7722-3	1	ZJ		w/Rear Disc Brakes (After 5-1-95)
12	5200 7642	1			BRACKET, Rear Brake Hose
13	5602 6757	1	ZJ		BRACKET, ABS Rear Axle (Sensor)
14	6502 655	1			SCREW, ABS Bracket
15	5200 7748	1	ZJ		CLIP, Brake Line Rear Axle
	5305 4355	1	ZG		
16	6502 655	AR	ZJ		SCREW
-	1843 251	AR			TUBING, Roll Stock 3/16" O.D.x25'
-	3879 283	AR			COVER, Tubing
-	5200 8206	AR			SLEEVE, Tubing Cover
-	6029 113	AR			NUT, 3/8-24 (Light Blue) Inverted Flare
-	6502 286	AR			NUT, M10-1-6g (Black) Inverted Flare
-	6034 880	AR			NUT, 3/8-24 (Light Blue) Inverted Flare
-	J322 0009	AR			NUT, 1/2-20 (Black) Inverted Flare
-	J319 5677	AR			NUT, 3/8-24 (Gold) Inverted Flare
-		1	XJ		TUBE, Union Inverted Flared (Not Serviced)
-	J044 2335	AR	XJ		UNION, Inflared 3/8-24, 3/16 Tube
-	5200 7533	AR	ZJ		CLIP, (3-Way) Brake HYD Clutch Tube
	3200 2292	1	XJ	RHD	CLIP, Brake
	5200 8188-9	1		ZJ	TUBE ASSEMBLY, Rear Axle Brake w/15" Disc/Disc w/ABS ***
	5200 8608-9	1		Z1	Export
	6034 880	1		ZJ	NUT, 3/8-24 (Light Blue) Inverted Flare
		1		ZJ	SPRING, Brake Tube (Not Serviced)

MODEL CODES:

72=2 DR Wagon
74=4 DR Wagon
77=Open Body 93" Whlbase
78=Open Body 103" Whlbase - Export
T=2WD
J,N=4WD
U=4WD (RHD)

BODY STYLES:

YJ=Wrangler (4X4) "S"
Weangler (4X4) SE
Wrangler (4X4) Sahara
Wrangler (4X4) Renegade
XJ=Cherokee SE
Cherokee Sport
Cherokee Country
ZJ=Grand Cherokee SE
Grand Cherokee Laredo
Grand Cherolee Limited
ZG=Grand Cherokee European
Y1=Wrangler
X1=Cherokee
Z1=Grand Cherokee
KDX=Vehicles

AR = Use as Required - = Non Illustrated Part P.A.R. = Paint as Required

BRAKE PEDAL WRANGLER, YJ
Figure 5-610

5-610

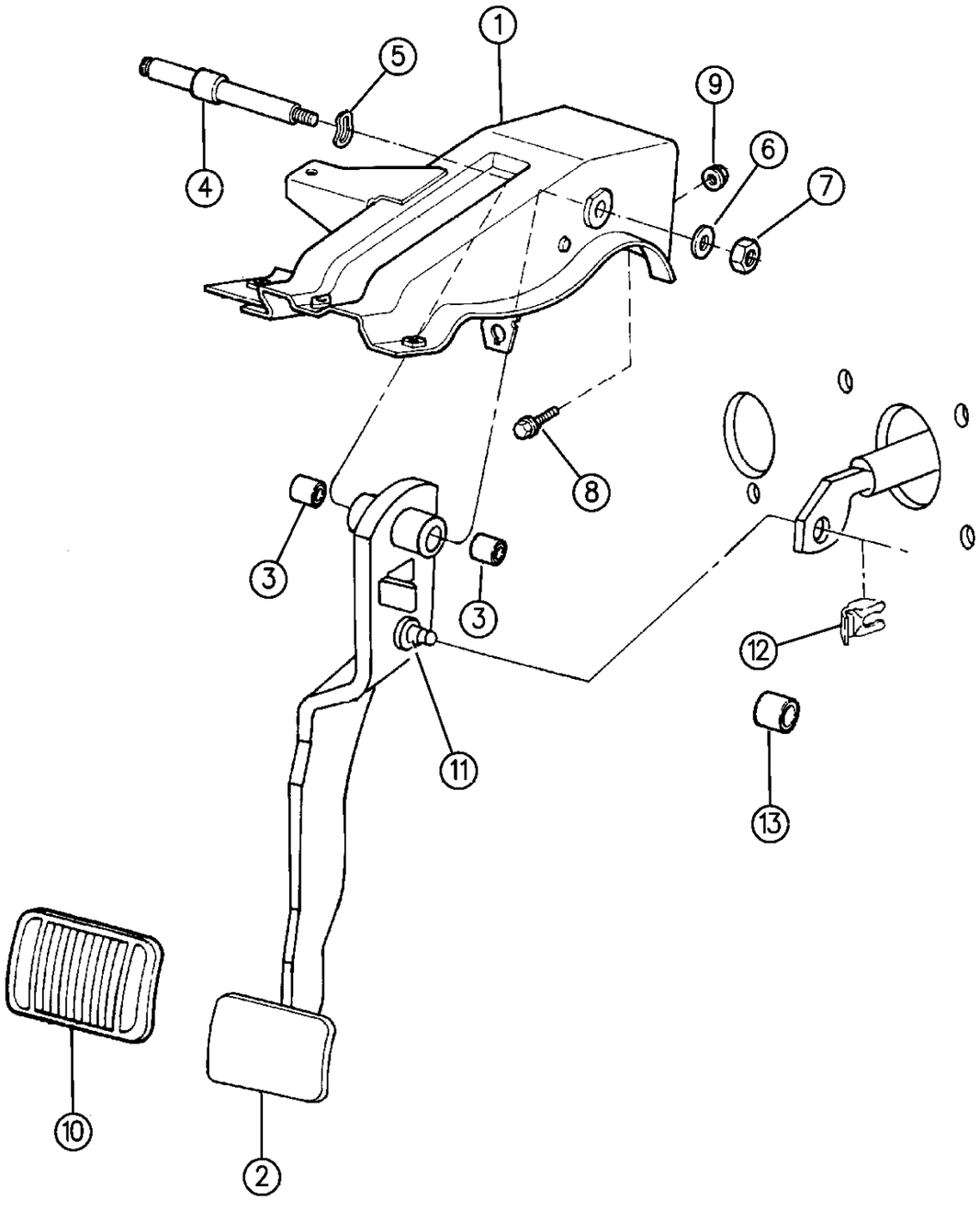

ITEM	PART NUMBER	QTY	BODY	MODEL	DESCRIPTION
1	5207 7558				BRACKET, Pedal
2					PEDAL, Brake
	5207 7628	1			w/Man. Trans.
	5208 7966	1	Y1		w/Man. Trans. (KDX)
	5207 8814	1			w/Auto Trans.
3	J094 6177	2			BUSHING
4					SHAFT
	5207 8599	1			w/Man. Trans.
	5200 8453	1			w/Auto Trans.
5	J535 1844	1			WASHER, Spring Type
6	J012 0396	1			WASHER, Flat
7	J400 4311	1			NUT, Locking
8	J018 0123	1			BOLT
9	J400 3909	4			NUT
10					PAD, Pedal
	5200 2750	1			w/Man. Trans.
	5207 8540	1			w/Auto Trans.
11	5207 7556	1			PIN, M/Cyl. Push Rod to Pedal
12	6035 334	1			CLIP
13	J321 5928	1			BUSHING, Brake Light Switch, KDX

MODEL CODES:

72=2 DR Wagon
74=4 DR Wagon
77=Open Body 93" Whlbase
78=Open Body 103" Whlbase - Export
T=2WD
J,N=4WD
U=4WD (RHD)

BODY STYLES:

YJ=Wrangler (4X4) "S"
Weangler (4X4) SE
Wrangler (4X4) Sahara
Wrangler (4X4) Renegade
XJ=Cherokee SE
Cherokee Sport
Cherokee Country
ZJ=Grand Cherokee SE
Grand Cherokee Laredo
Grand Cherolee Limited
ZG=Grand Cherokee European
Y1=Wrangler
X1=Cherokee
Z1=Grand Cherokee
KDX=Vehicles

AR = Use as Required - = Non Illustrated Part P.A.R. = Paint as Required

« RETURN TO GROUP INDEX

BRAKE PEDAL CHEROKEE, GRAND CHEROKEE
Figure 5-620

5-620

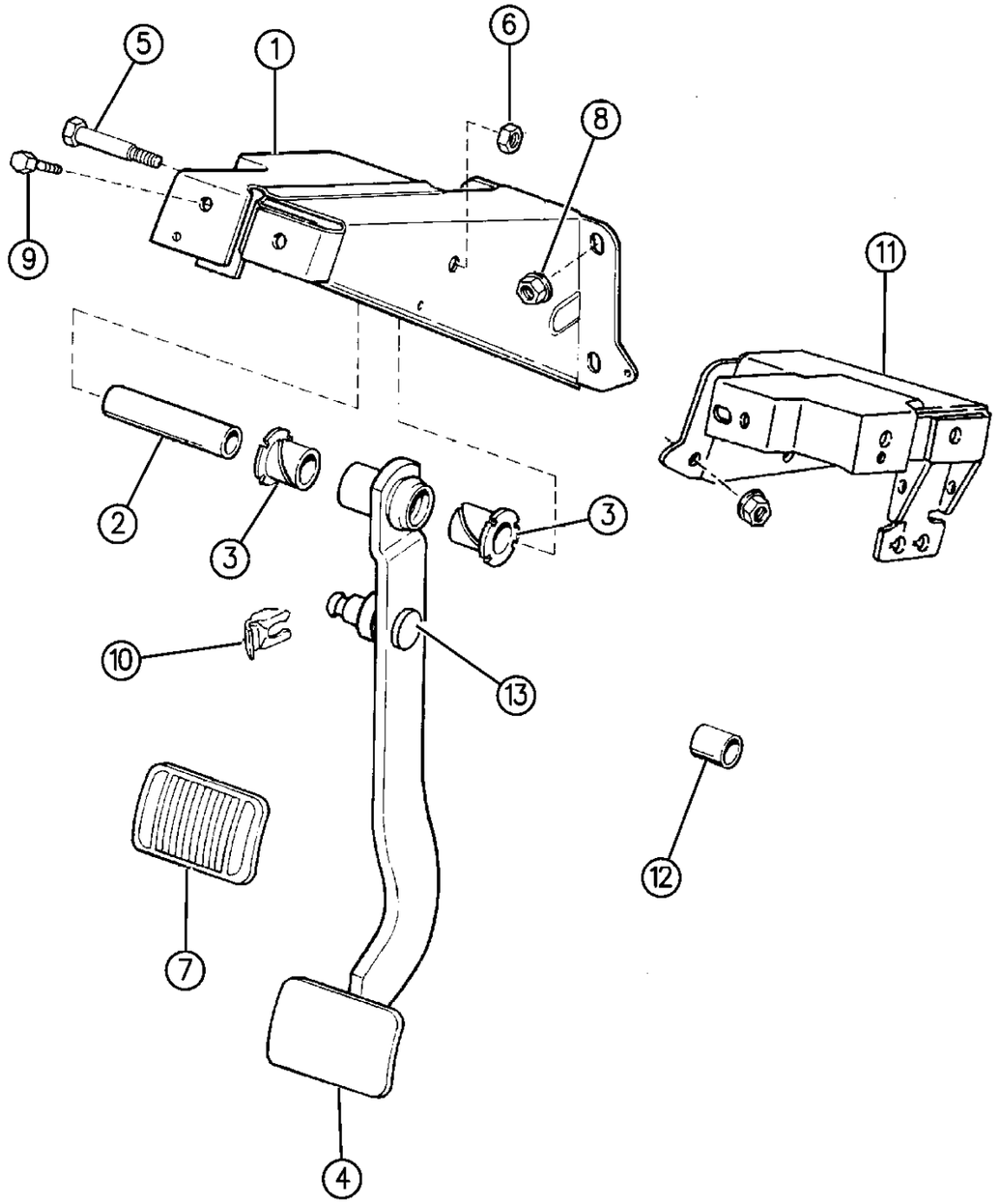

94J05 620

ITEM	PART NUMBER	QTY	BODY	MODEL	DESCRIPTION
1					BRACKET, Pedal
	5207 7943	1	XJ		Column Mounted Gear Shift
	5207 7942	1	XJ		Floor Mounted Gear Shift 1994
	5207 9075	1	XJ		Floor Mounted Gear Shift 1995-96
	5207 8407	1	ZJ		
	5305 4137	1	ZG		
2	5300 0637	1			SLEEVE, Brake Pedal Pivot
3	J322 5981	2			BUSHING
4					PEDAL, Brake
					Manual Transmission
	5207 8072	1	XJ		
	5207 8075	1	XJ		EXPORT, w/o ABS
	5207 8491	1	ZJ		Up to 8-24-93
	5207 8765	1	ZJ		After 8-24-93
					Automatic Transmission
	5207 8539	1	XJ		EXPORT, w/o ABS 1994
	5207 8537	1	XJ		1994
	5207 9103	1	XJ		1995-96
	5207 8493	1	ZJ		Up to 8-24-93
	5207 8764	1	ZJ		After 8-24-93
	5207 4139	1	ZG		w/Man. Trans.
	5207 4145	1	ZG		w/Auto Trans.
5					BOLT
	3420 1515	1	XJ		Manual Transmission
	6100 206	1	XJ		Automatic Transmission
	6100 206	1	ZJ		
6	6100 501	1			NUT
7					PAD, Pedal
	5200 2750	1			Manual Transmission
	5200 2749	1	ZJ		Automatic Transmission
	5207 8540	1	XJ		Automatic Transmission
8	J400 3909	4			NUT
9	3420 1559	2	XJ		BOLT
10	6035 334	1			CLIP, Push Rod to Brake Pedal Retaining
-	0120 395	1	ZJ		WASHER, Flat, Push Rod to Brake Pedal
-	0905 206	1	ZJ		WASHER, Wave, Push Rod to Brake Pedal
11	5600 5868	1	XJ		BRACKET, Brake Lamp Switch
	6031 704	1	XJ		CLIP, Brake Lamp Switch
12	J321 5928	1	X1		SLEEVE, KDX-China, Venezuela
13					PIN, M/Cyl. Push Rod to Brake Pedal
	5207 7555	1	XJ		
		1	ZJ		(Serv. Assy.)

MODEL CODES:

72=2 DR Wagon
74=4 DR Wagon
77=Open Body 93" Whlbase
78=Open Body 103" Whlbase - Export
T=2WD
J,N=4WD
U=4WD (RHD)

BODY STYLES:

YJ=Wrangler (4X4) "S"
Weangler (4X4) SE
Wrangler (4X4) Sahara
Wrangler (4X4) Renegade
XJ=Cherokee SE
Cherokee Sport
Cherokee Country
ZJ=Grand Cherokee SE
Grand Cherokee Laredo
Grand Cherolee Limited
ZG=Grand Cherokee European
Y1=Wrangler
X1=Cherokee
Z1=Grand Cherokee
KDX=Vehicles

AR = Use as Required - = Non Illustrated Part P.A.R. = Paint as Required

BRAKE PEDAL CHEROKEE, GRAND CHEROKEE
Figure 5-620

5-620

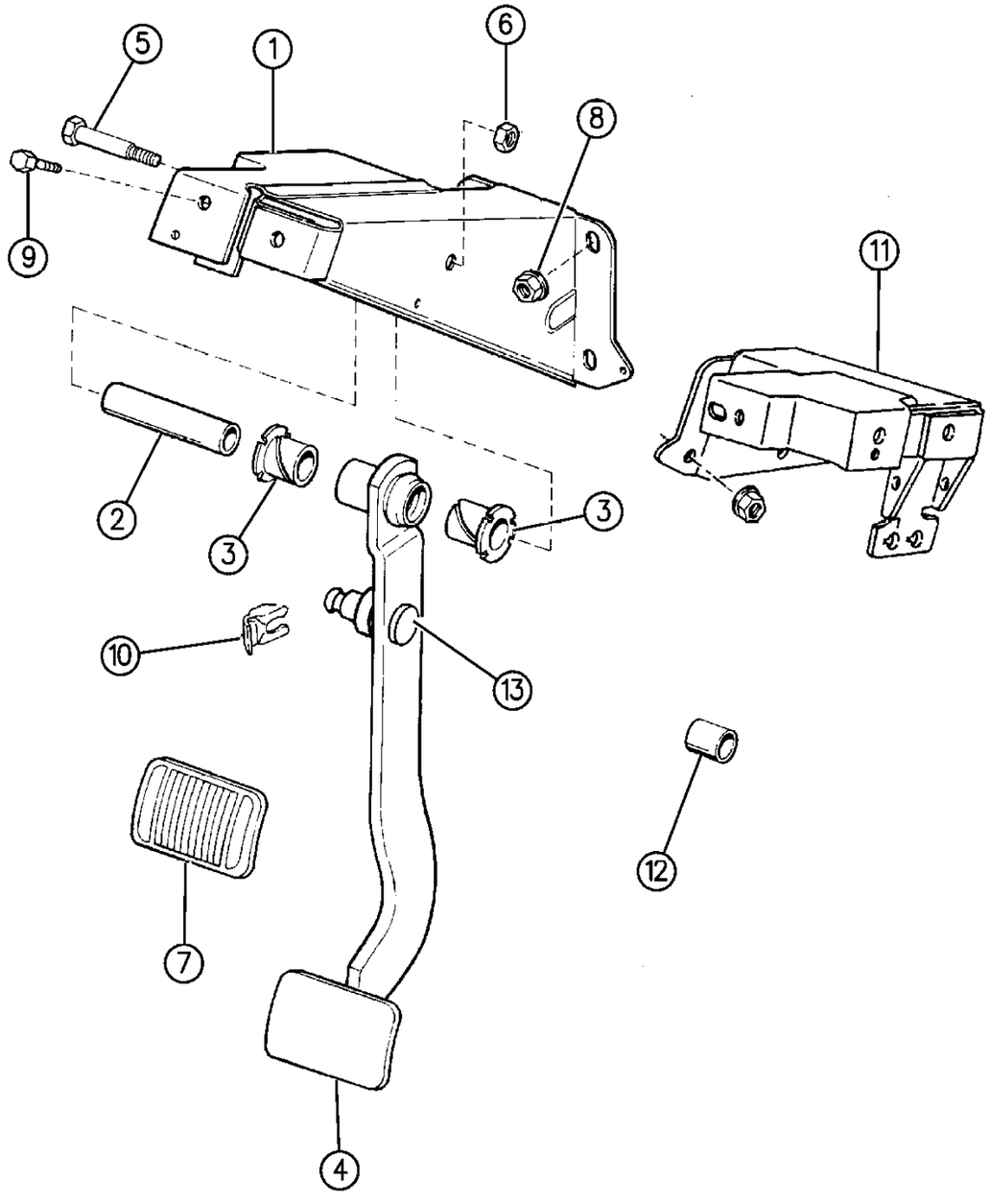

94J05 620

ITEM	PART NUMBER	QTY	BODY	MODEL	DESCRIPTION
-	4446 361	1	ZJ		BUSHING, Push Rod to Brake Pedal Pin
-		1	ZJ		SCREW and WASHER, Brake Pedal Mtg. Bracket to Strg. Column (Not Serviced)

MODEL CODES:

72=2 DR Wagon
74=4 DR Wagon
77=Open Body 93" Whlbase
78=Open Body 103" Whlbase - Export
T=2WD
J,N=4WD
U=4WD (RHD)

BODY STYLES:

YJ=Wrangler (4X4) "S"
Weangler (4X4) SE
Wrangler (4X4) Sahara
Wrangler (4X4) Renegade
XJ=Cherokee SE
Cherokee Sport
Cherokee Country
ZJ=Grand Cherokee SE
Grand Cherokee Laredo
Grand Cherolee Limited
ZG=Grand Cherokee European
Y1=Wrangler
X1=Cherokee
Z1=Grand Cherokee
KDX=Vehicles

AR = Use as Required - = Non Illustrated Part P.A.R. = Paint as Required

DIESEL ENGINE VACUUM PUMP EXPORT CHEROKEE
Figure 5-710

5-710

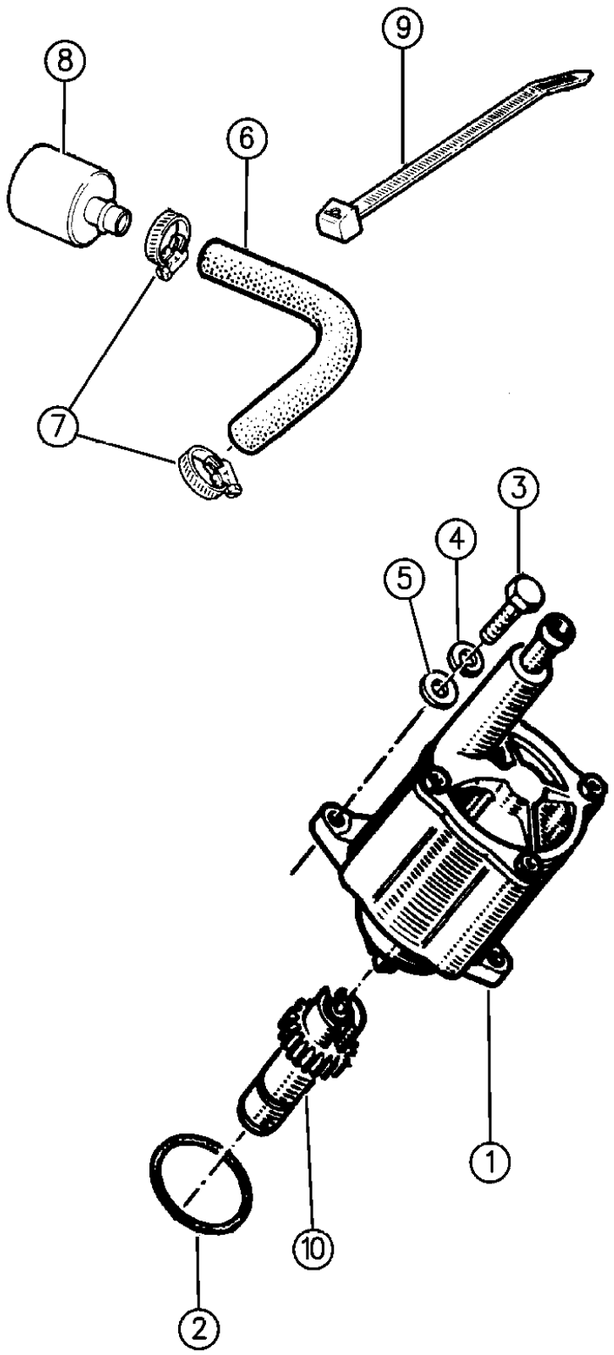

94J05 710

ITEM	PART NUMBER	QTY	BODY	MODEL	DESCRIPTION
1	T073 5265	1			PUMP, Vacuum, For J8S-890 Engine
2	T306 5067	1			SEAL
3	T300 1142	2			BOLT
4	T140 2092	2			WASHER, Lock
5	T140 2065	2			WASHER, Flat
6	5300 2575	1			HOSE
7	J320 3076	2			CLAMP
8	5300 2574	1			SILENCER, Vacuum Pump
9	J322 3227	1			STRAP
10	T072 3245	1			GEAR

MODEL CODES:

72=2 DR Wagon
74=4 DR Wagon
77=Open Body 93" Whlbase
78=Open Body 103" Whlbase - Export
T=2WD
J,N=4WD
U=4WD (RHD)

BODY STYLES:

YJ=Wrangler (4X4) "S"
Weangler (4X4) SE
Wrangler (4X4) Sahara
Wrangler (4X4) Renegade

XJ=Cherokee SE
Cherokee Sport
Cherokee Country

ZJ=Grand Cherokee SE
Grand Cherokee Laredo
Grand Cherolee Limited
ZG=Grand Cherokee European

Y1=Wrangler
X1=Cherokee
Z1=Grand Cherokee
KDX=Vehicles

AR = Use as Required - = Non Illustrated Part P.A.R. = Paint as Required

« RETURN TO GROUP INDEX

SAGIPARTS

GROUP-6
CLUTCH

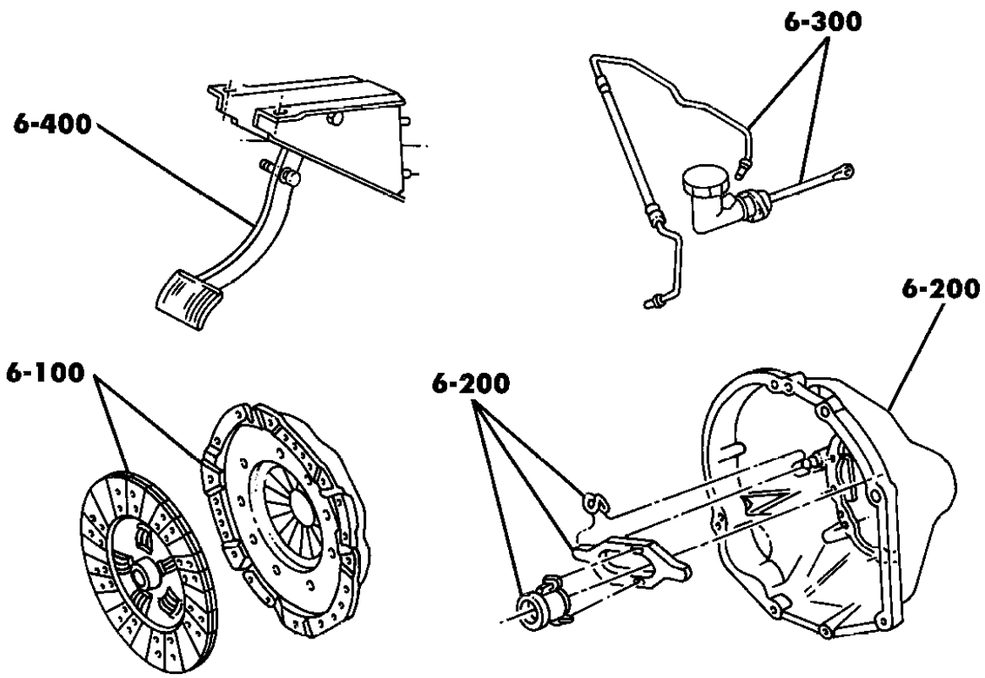

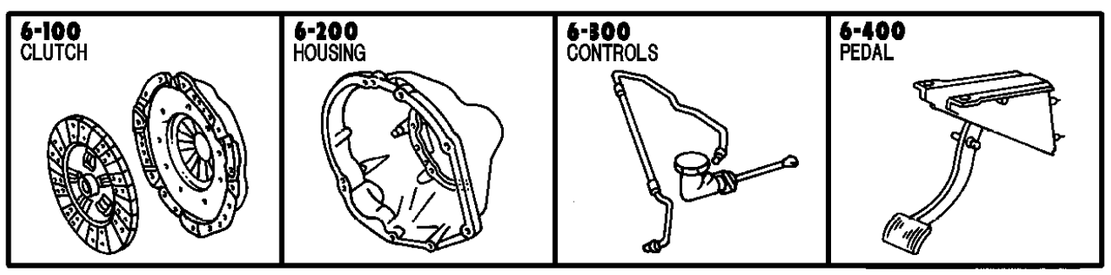

GROUP 6 - CLUTCH

ILLUSTRATION TITLE — **GROUP-FIG. NO.**

CLUTCH
CLUTCH ALL MODELS . . . . . Fig. 6-110

HOUSING AND PAN, CLUTCH
HOUSING AND PAN, CLUTCH WRANGLER, YJ . . . . . Fig. 6-210
HOUSING AND PAN, CLUTCH CHEROKEE . . . . . Fig. 6-220
HOUSING AND PAN, CLUTCH CHEROKEE (DIESEL) . . . . . Fig. 6-230
CLUTCH HOUSING AND RELATED PARTS GRAND CHEROKEE . . . . . Fig. 6-240

CONTROL, CLUTCH
CONTROL, CLUTCH WRANGLER, YJ . . . . . Fig. 6-310
CONTROL, CLUTCH CHEROKEE . . . . . Fig. 6-320
CONTROL, CLUTCH CHEROKEE-RHD . . . . . Fig. 6-330
CONTROL, CLUTCH ZJ - GRAND CHEROKEE . . . . . Fig. 6-340

PEDAL, CLUTCH
PEDAL, CLUTCH WRANGLER, YJ . . . . . Fig. 6-410
PEDAL, CLUTCH CHEROKEE . . . . . Fig. 6-420
PEDAL, CLUTCH CHEROKEE-RHD . . . . . Fig. 6-430
CLUTCH PEDAL GRAND CHEROKEE . . . . . Fig. 6-440

CLUTCH ALL MODELS
Figure 6-110

6-110

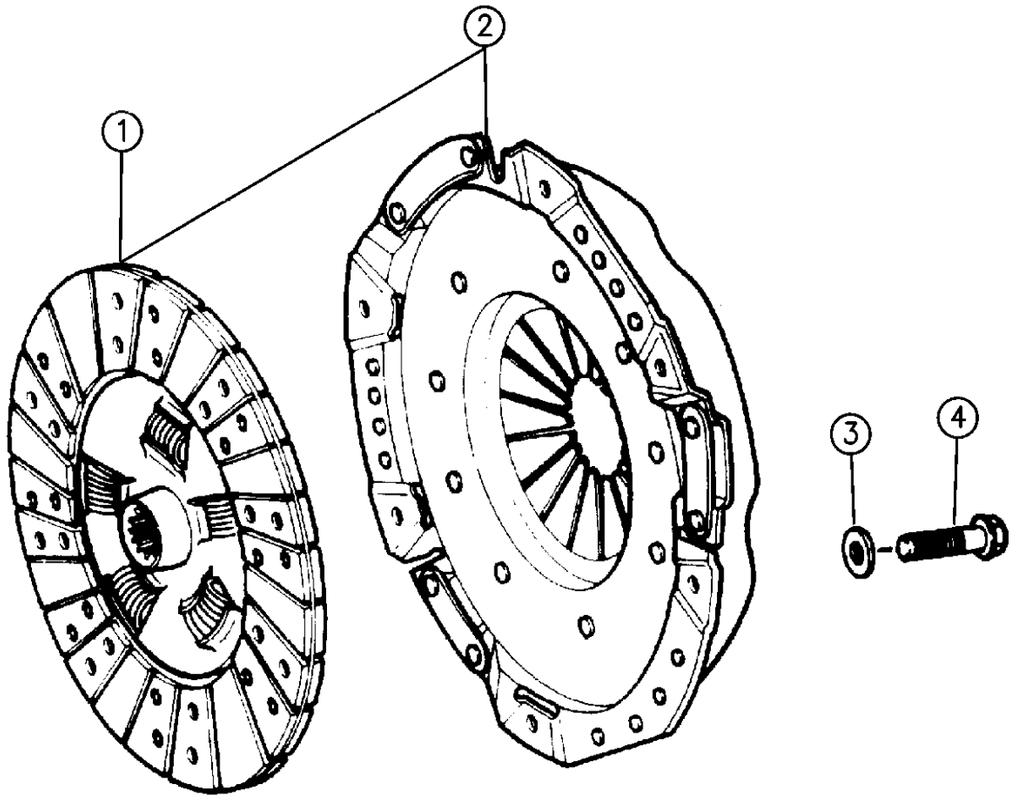

94J06 110

ITEM	PART NUMBER	QTY	BODY	MODEL	DESCRIPTION
1					DISC, Clutch, Driven Plate
	5208 7578	1			4.0L Six Cylinder Engine
	5200 7113	1			2.1L Diesel
	5210 7581	1			2.5L Diesel
2					COVER And PLATE ASSEMBLY, Clutch and Disc Package ***
	4626 213	1			2.5L Four Cylinder Engine
	4713 323	1			4.0L Six Cylinder Engine
	4637 112	1			2.1L Diesel
	4773 773	1			2.5L Diesel
3					WASHER, Cover Assembly to Block
	1150 0221	AR			2.5L Four Cylinder, 4.0L Six Cylinder Engines
	T140 2092	AR			2.1L Diesel Engine
4					BOLT, Clutch Cover to Flywheel
	3420 1373	6			2.5L Four Cylinder Engine, (M8-1.25x22)
	J400 4165	6			4.0L Engine, (3/8-16x.84) also 2.5L Diesel Engine
	6503 0425	6			2.1L Diesel

MODEL CODES:

72=2 DR Wagon
74=4 DR Wagon
77=Open Body 93" Whlbase
78=Open Body 103" Whlbase - Export
T=2WD
J,N=4WD
U=4WD (RHD)

BODY STYLES:

YJ=Wrangler (4X4) "S"
Weangler (4X4) SE
Wrangler (4X4) Sahara
Wrangler (4X4) Renegade
XJ=Cherokee SE
Cherokee Sport
Cherokee Country
ZJ=Grand Cherokee SE
Grand Cherokee Laredo
Grand Cherolee Limited
ZG=Grand Cherokee European
Y1=Wrangler
X1=Cherokee
Z1=Grand Cherokee
KDX=Vehicles

AR = Use as Required - = Non Illustrated Part P.A.R. = Paint as Required

HOUSING AND PAN, CLUTCH WRANGLER, YJ
Figure 6-210

6-210

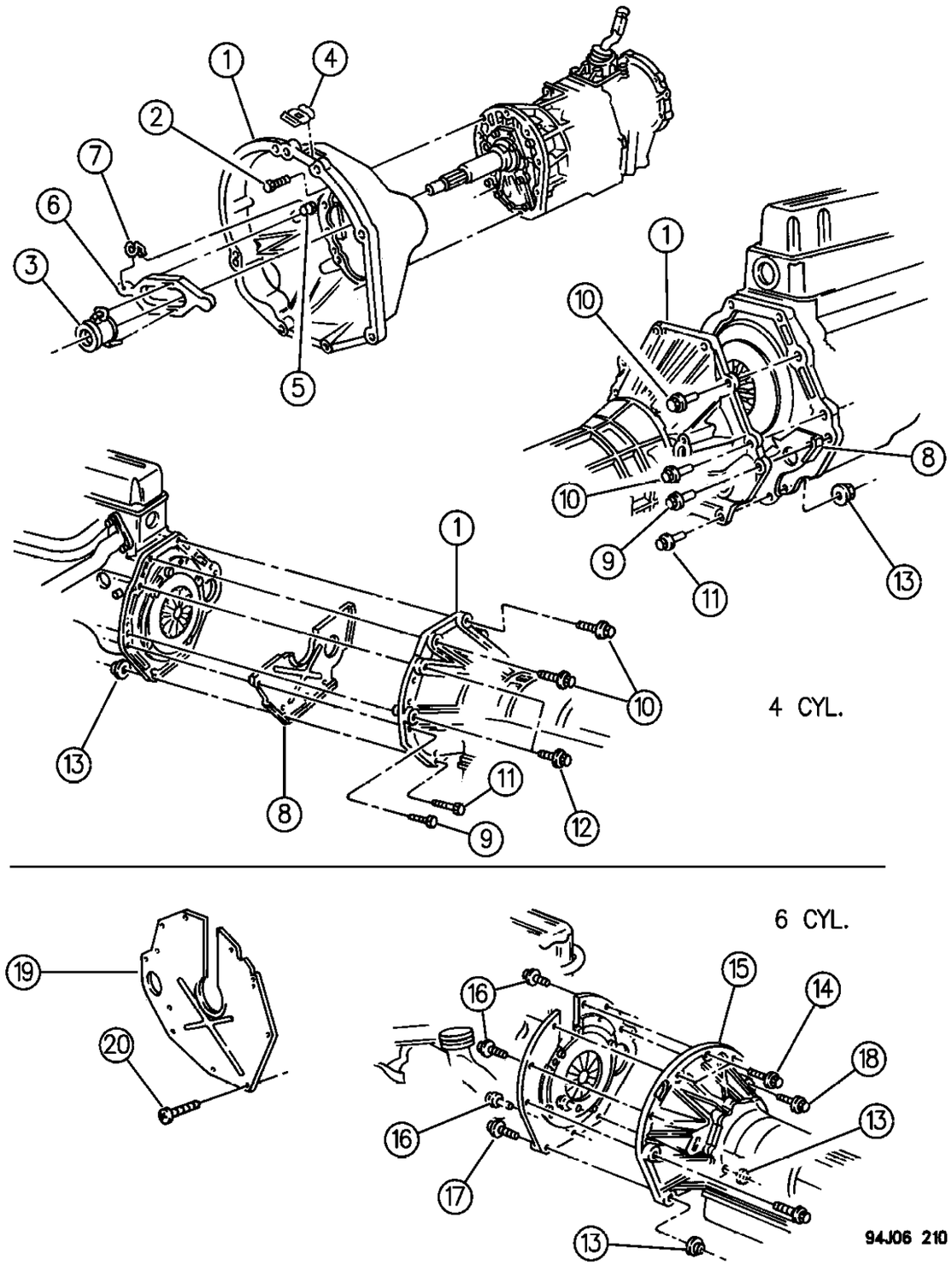

ITEM	PART NUMBER	QTY	BODY	MODEL	DESCRIPTION
1	5210 4000	1			HOUSING, Clutch, 2.5 L 4 Cylinder Engine
2	6502 442	9			BOLT, Clutch Housing to Trans. M10x1.25x34
3	5300 8342	1			BEARING, Clutch Release
4	5300 6010	1			GROMMET, w/Timing Probe Pivot
5	5208 7542	1			PIVOT
6	5210 7555	1			FORK, HYD Clutch Release
7	4338 855	1			SPRING, Clutch Release Arm Pivot Ret.
8	5300 3382	1			COVER, Dust Clutch Hsg. w/2.5 L 4 Cylinder Engine
9	1150 0986	2			BOLT, M8x2.212x16.00
10	1150 4922	4			BOLT, M12-1.75x50
	6100 345	2			M12x1.75x45.00 Top Two Bolts w/521040000 ***
11	1150 5098	2			BOLT, M12x1.75x60.00
12	3420 1837	2			BOLT, M12x1.75x90.00
13	6502 697	2			NUT, M12x1.75
14		2			BOLT, Ext Torx Wa Hd. Clutch Hsg. to Top of Engine Block (Not Serviced)
15	5300 8158	1			HOUSING, Clutch 6 Cylinder Engine
	5208 7542	1			PIVOT
16	1150 0986	3			SCREW, M8x2.12x16.00
17	1150 4922	2			BOLT, M12-1.75x50
18		2			BOLT, Hex Flg Hd. Clutch Hsg. to Bottom of Engine Block (Not Serviced)
19	5300 4473	1			SPACER, Clutch Hsg. 6 Cylinder Engine
20	1150 4922	2			BOLT, Hex Flg Hd.- Spacer Plate to Clutch Hsg. M12x1.75x50.00
	1150 2813	2			NUT, Hex Flg Spacer Plate to Clutch Hsg. M12x1.75
-	0152 344	2			NUT, 3/8-15 Housing for Clutch

MODEL CODES:

72=2 DR Wagon
74=4 DR Wagon
77=Open Body 93" Whlbase
78=Open Body 103" Whlbase - Export
T=2WD
J,N=4WD
U=4WD (RHD)

BODY STYLES:

YJ=Wrangler (4X4) "S"
Weangler (4X4) SE
Wrangler (4X4) Sahara
Wrangler (4X4) Renegade
XJ=Cherokee SE
Cherokee Sport
Cherokee Country
ZJ=Grand Cherokee SE
Grand Cherokee Laredo
Grand Cherolee Limited
ZG=Grand Cherokee European
Y1=Wrangler
X1=Cherokee
Z1=Grand Cherokee
KDX=Vehicles

AR = Use as Required - = Non Illustrated Part P.A.R. = Paint as Required

« RETURN TO GROUP INDEX

HOUSING AND PAN, CLUTCH CHEROKEE
Figure 6-220

6–220

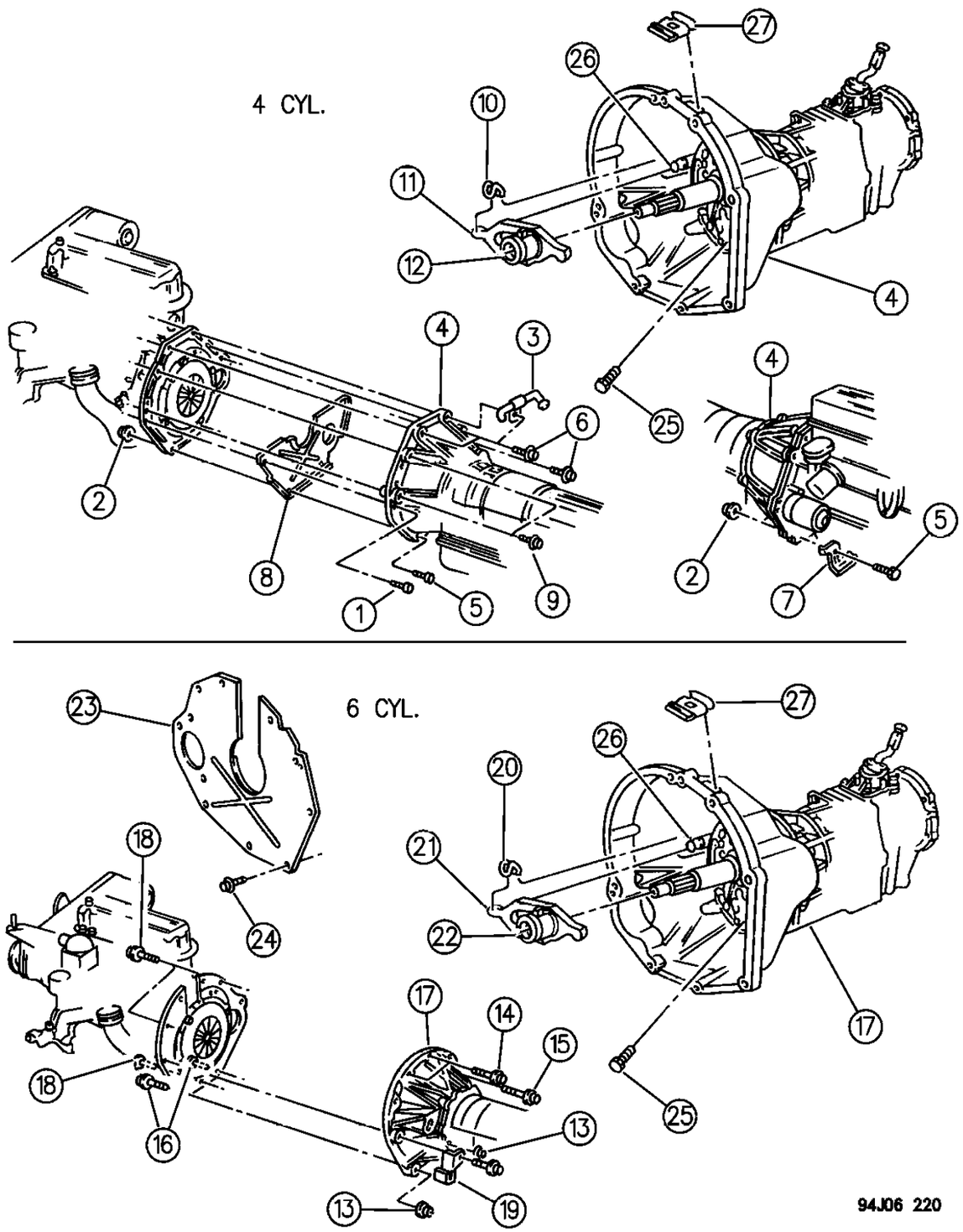

ITEM	PART NUMBER	QTY	BODY	MODEL	DESCRIPTION
1	1150 0986	2			SCREW, Hex Wa Hd. M8x2.12x16.00
2		2			NUT, Hex Flg Lk. M12x1.75 (Not Serviced)
3	5300 0805	1			TUBE and CLIP, Transfer Case Vent ***
4					HOUSING, Clutch
	5210 7557	1			w/2.5L Engine
	5300 8157	1			w/4.0L Engine
	0152 344	AR			NUT, 3/8-16
5		2			BOLT, hex Flg Hd. M12x1.75x65.00 (Not Serviced)
6	1150 4922	4			BOLT, hex Flg Hd. M12x1.75x50.00
7	5300 1652	1			STIFFENER, Front Exhaust Pipe ***
8	5300 3382	1			SHIELD, Clutch Hsg. Dust w/2.5 L Engine
9	3420 1837	2			BOLT, Hex Flg Hd. M12x1.75x90.00
10	4338 855	1			SPRING, Clutch Release Arm Pivot Ret.
11	5210 7555	1			FORK, HYD Clutch Release
12	5300 8342	1			BEARING, Clutch Release
13		2			NUT, Hex Flg Lk. M12x1.75 (Not Serviced)
14		2			BOLT, Ext Torx Wa Hd. Clutch Hsg. to Top of Engine Block (Not Serviced)
15		2			BOLT, Hex Flg Hd. Clutch Hsg. to Bottom of Engine Block (Not Serviced)
16	1150 4922	2			BOLT, Hex Flg Hd. M12x1.75x50.00
17	5300 8158	1			HOUSING, Clutch w/4.0 L Engine
	0152 344	AR			NUT, 3/8-16
18	1150 0986	3			SCREW, Hex Wa Hd. M8x2.12x16.00
19	5300 8471	1			BRACKET, HYD Clutch Tube Mtg. w/4.0 L Engine
20	4338 855	1			SPRING, Clutch Release Arm Pivot Ret.
21	5210 7555	1			FORK, HYD Clutch Release
22	5300 8342	1			BEARING, Clutch Release
23	5300 4473	1			SPACER, Clutch Hsg. w/4.0 L Engine
24	1150 4922	2			BOLT, Hex Flg Hd.- Spacer Plate to Clutch Hsg. M12x1.75x50.00
	1150 2813	2			NUT, Hex Flg Spacer Plate to Clutch Hsg. M12x1.75
25	6503 299	9			BOLT, Hex Flg Hd. M10x1.25x34.00
26	5208 7542	1			PIVOT
27	5300 6010	1			GROMMET, Timing Probe

MODEL CODES:

72=2 DR Wagon
74=4 DR Wagon
77=Open Body 93" Whlbase
78=Open Body 103" Whlbase - Export
T=2WD
J,N=4WD
U=4WD (RHD)

BODY STYLES:

YJ=Wrangler (4X4) "S"
Weangler (4X4) SE
Wrangler (4X4) Sahara
Wrangler (4X4) Renegade
XJ=Cherokee SE
Cherokee Sport
Cherokee Country
ZJ=Grand Cherokee SE
Grand Cherokee Laredo
Grand Cherolee Limited
ZG=Grand Cherokee European
Y1=Wrangler
X1=Cherokee
Z1=Grand Cherokee
KDX=Vehicles

AR = Use as Required - = Non Illustrated Part P.A.R. = Paint as Required

« RETURN TO GROUP INDEX

HOUSING AND PAN, CLUTCH CHEROKEE (DIESEL)
Figure 6-230

6–230

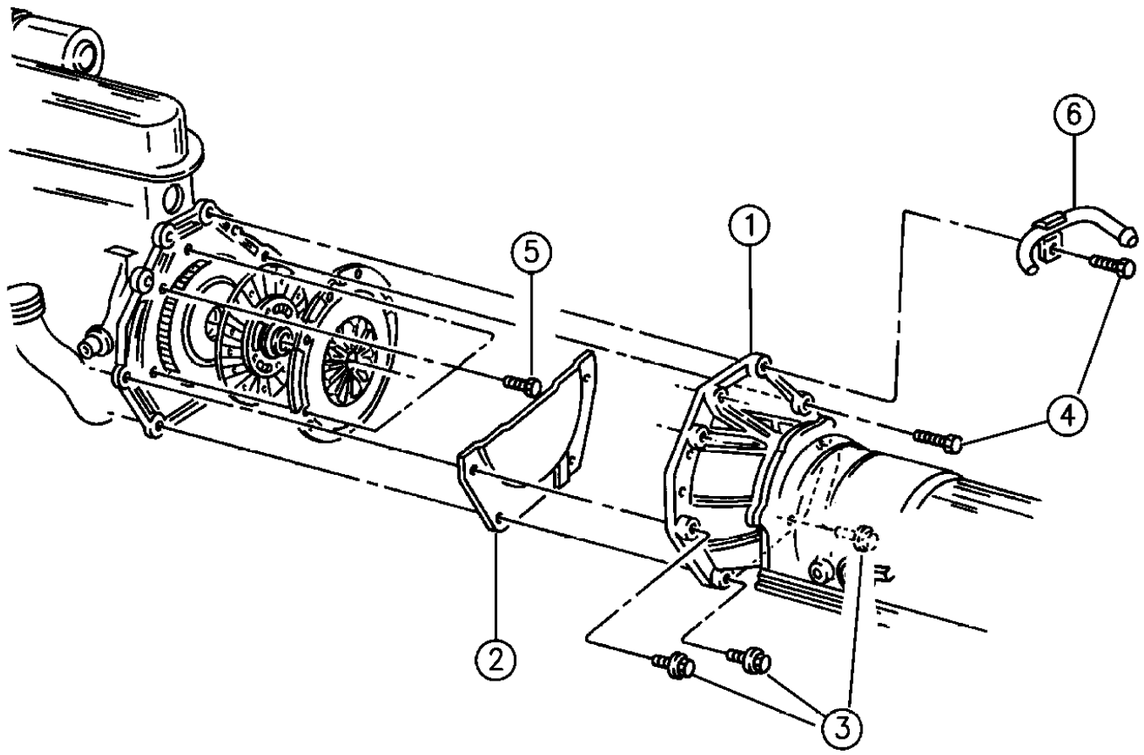

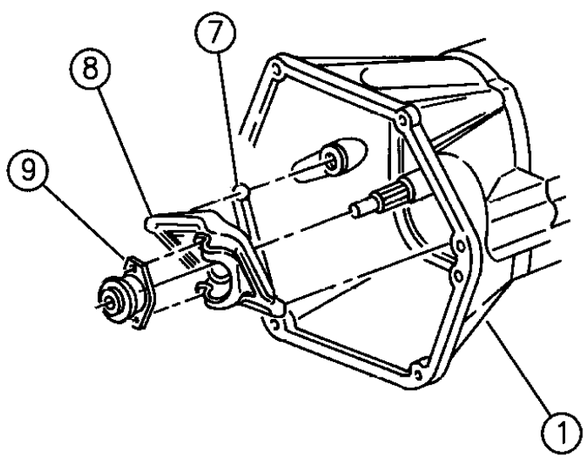

94J06 230

ITEM	PART NUMBER	QTY	BODY	MODEL	DESCRIPTION
1					HOUSING, Clutch
	5300 1164	1			2.1L Engine
	5300 8158	1			2.5L Engine
	3420 2317	9			BOLT, Hex Flg Spec Hd. M10x1.25x60.00
2	5300 1336	1			COVER, Housing
3	6100 952	2			BOLT, Hex Flg Hd. M12x1.75x55.00
4					BOLT
	3420 2042	AR			1994 M10x1.50x90.00
	6034 795	AR			1995-96 .375-16x2.00
5	6503 042	6			SCREW and WASHER, (Cap Screw) Socket Hd. w/Conical Wa. M7x1.00x20.00
6	5300 0805	1			TUBE and CLIP, Transfer Case Vent ***
7	J016 9162	1			BALL, Pivot 3/8" Dia.
8	5300 0484	1			LEVER, Clutch Throwout
9					CARRIER and BEARING ***
	5300 1162	1			1994
	5300 8342	1			1995-96

MODEL CODES:

72=2 DR Wagon
74=4 DR Wagon
77=Open Body 93" Whlbase
78=Open Body 103" Whlbase - Export
T=2WD
J,N=4WD
U=4WD (RHD)

BODY STYLES:

YJ=Wrangler (4X4) "S"
Weangler (4X4) SE
Wrangler (4X4) Sahara
Wrangler (4X4) Renegade

XJ=Cherokee SE
Cherokee Sport
Cherokee Country

ZJ=Grand Cherokee SE
Grand Cherokee Laredo
Grand Cherolee Limited
ZG=Grand Cherokee European

Y1=Wrangler
X1=Cherokee
Z1=Grand Cherokee
KDX=Vehicles

AR = Use as Required - = Non Illustrated Part P.A.R. = Paint as Required

CLUTCH HOUSING AND RELATED PARTS GRAND CHEROKEE
Figure 6-240

6-240

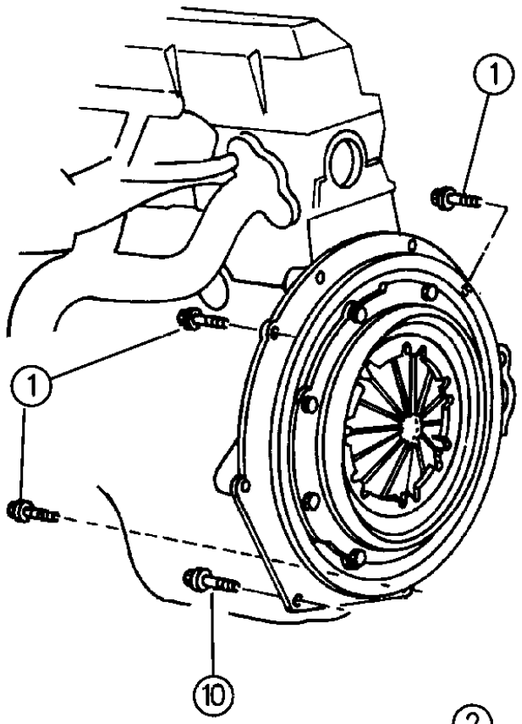

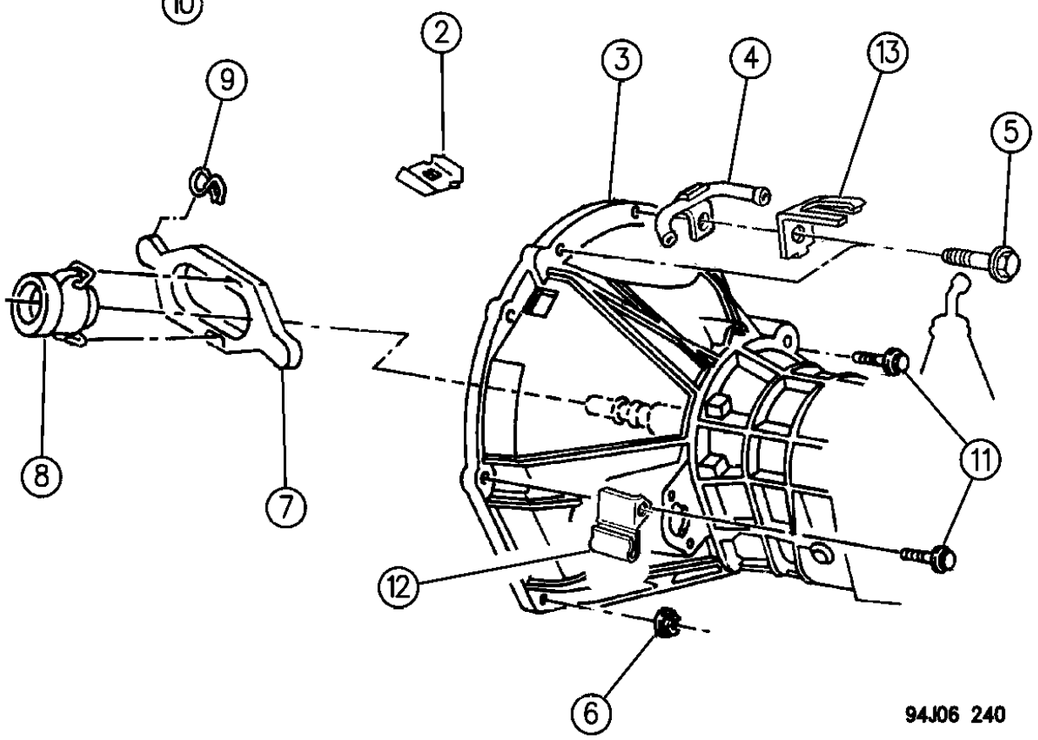

ITEM	PART NUMBER	QTY	BODY	MODEL	DESCRIPTION
1	1150 0986	3			BOLT
2	5300 6010	1			GROMMMET, Timing Probe ***
3	5300 8158	1			HOUSING
	5208 7542	1			PIVOT
	0152 344	1			NUT, Clutch Release Lever
	5300 4473	1			SPACER, Clutch Housing w/4.0 L Engine
	1150 4922	2			BOLT, Hex Flg Hd. Spacer Plate to Clutch Hsg M12x1.75x50.00
	1150 2813	2			NUT, Hex Flg Spacer Plate to Clutch Hsg. M12x1.75
4	5300 4828				TUBE, w/ CLIP
5		2			BOLT, Ext Torx Wa Hd. (Not Serviced)
6	1150 2813	2			NUT
7	5210 7555	1			FORK, Clutch Release
8	5300 8342	1			BEARING, Clutch Release
9	4338 855	1			SPRING, Clutch Release Arm
10	1150 4922	2			BOLT
11		2			BOLT, Hex Flg Hd. (Not Serviced)
12	5300 8471	1			BRACKET, HYDR Clutch Tube
13		1			CLIP, (Serviced In Item 4)

MODEL CODES:

72=2 DR Wagon
74=4 DR Wagon
77=Open Body 93" Whlbase
78=Open Body 103" Whlbase - Export
T=2WD
J,N=4WD
U=4WD (RHD)

BODY STYLES:

YJ=Wrangler (4X4) "S"
Weangler (4X4) SE
Wrangler (4X4) Sahara
Wrangler (4X4) Renegade
XJ=Cherokee SE
Cherokee Sport
Cherokee Country
ZJ=Grand Cherokee SE
Grand Cherokee Laredo
Grand Cherolee Limited
ZG=Grand Cherokee European
Y1=Wrangler
X1=Cherokee
Z1=Grand Cherokee
KDX=Vehicles

AR = Use as Required - = Non Illustrated Part P.A.R. = Paint as Required

« RETURN TO GROUP INDEX

CONTROL, CLUTCH WRANGLER, YJ
Figure 6-310

6-310B

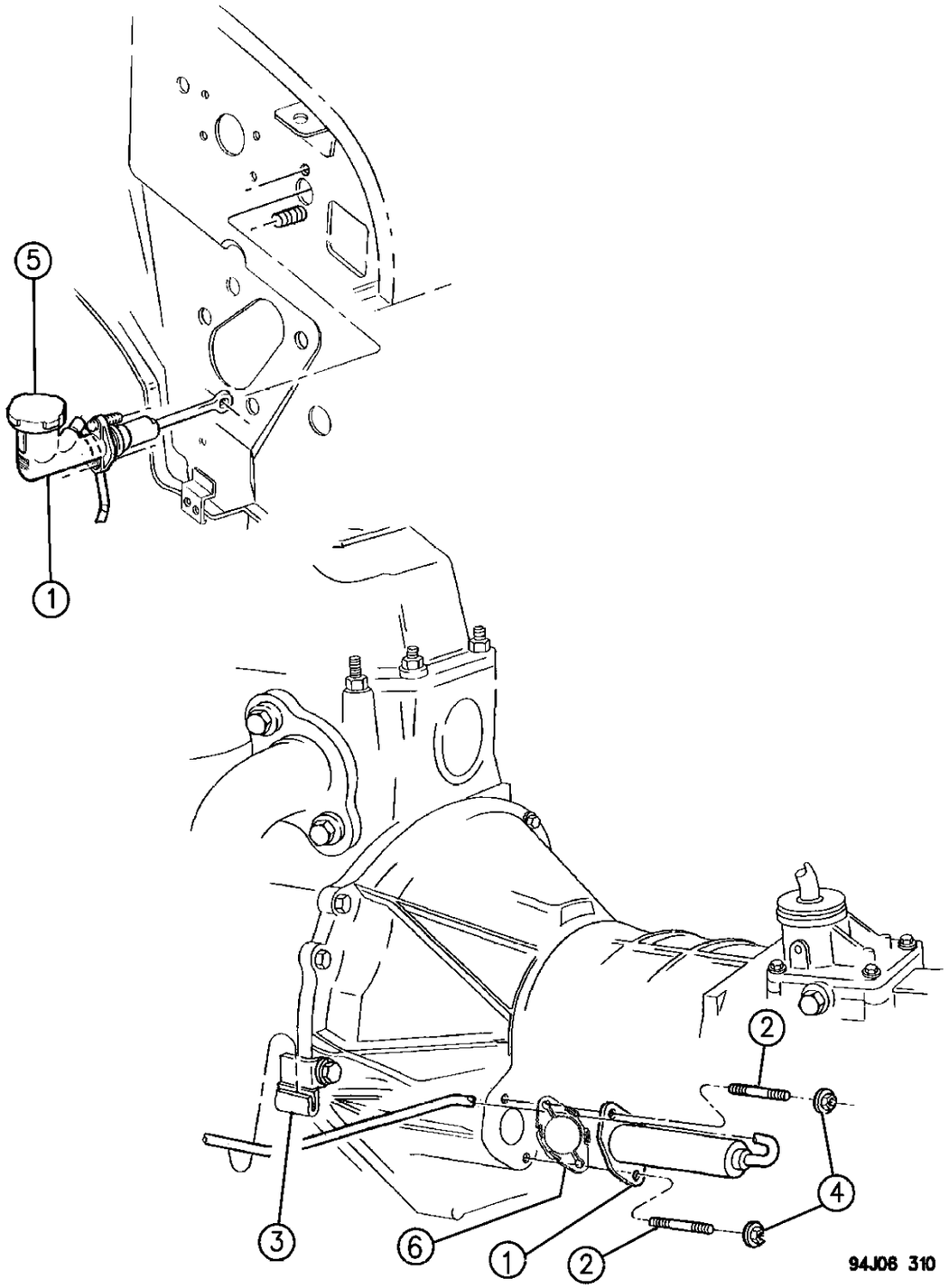

ITEM	PART NUMBER	QTY	BODY	MODEL	DESCRIPTION
1	5210 7642	1			HYDRAULIC ASSEMBLY, Clutch Actuator ***
	5210 4105	1	Y1		RHD
2	6032 878	2			STUD
3	5300 8471	1			BRACKET, HYD Clutch Tube
4	J400 6725	2			NUT, Hex Flg Locking
5	4741 671	1			CAP, Reservoir
6	4797 072	1			SHIM, 5mm (TSB-06-03-94) ***

MODEL CODES:

72=2 DR Wagon
74=4 DR Wagon
77=Open Body 93" Whlbase
78=Open Body 103" Whlbase - Export
T=2WD
J,N=4WD
U=4WD (RHD)

BODY STYLES:

YJ=Wrangler (4X4) "S"
Weangler (4X4) SE
Wrangler (4X4) Sahara
Wrangler (4X4) Renegade
XJ=Cherokee SE
Cherokee Sport
Cherokee Country
ZJ=Grand Cherokee SE
Grand Cherokee Laredo
Grand Cherolee Limited
ZG=Grand Cherokee European
Y1=Wrangler
X1=Cherokee
Z1=Grand Cherokee
KDX=Vehicles

AR = Use as Required - = Non Illustrated Part P.A.R. = Paint as Required

« RETURN TO GROUP INDEX

CONTROL, CLUTCH CHEROKEE
Figure 6-320

6-320A

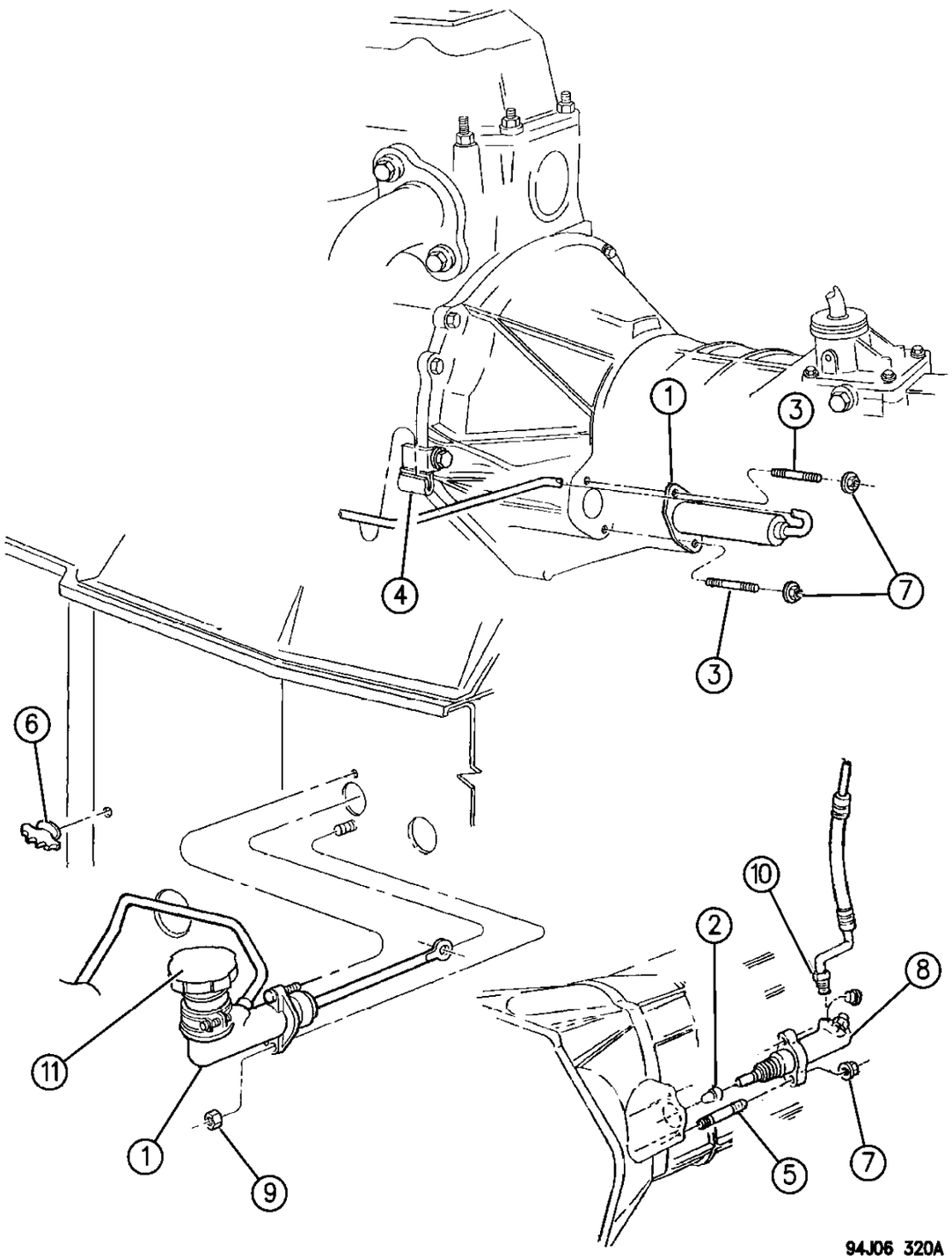

ITEM	PART NUMBER	QTY	BODY	MODEL	DESCRIPTION
1	5210 7701	1			HYDRAULIC ASSEMBLY, Clutch Actuator ***
	5208 7507	1			CYLINDER, Clutch Master w/2.1 L Diesel Engine, 1994
2	J321 7479	1			PIVOT, 2.1 L Diesel Engine, 1994
3	6032 878	2			STUD
4	5300 8471	1			BRACKET, HYD Clutch Tube Mount
5	3420 2043	2			STUD, 2.1 L Diesel Engine, 1994
6	3200 0404	1			CLIP, Brake Line/HYD Line to Dash Reinf.
7	J400 6725	2			NUT, 5/16-18 Hex Flg Lock
8	5300 1324	1			SLAVE CYLINDER, HYD Clutch 2.1 L Diesel Engine, 1994 ***
9	1150 2811	AR			NUT, Hx Flg Lock
10	4636 862	1			HOSE and TUBE, HYD Clutch 2.1 L Diesel Engine, 1994 ***
11	4741 671	1			CAP, Reservoir

MODEL CODES:

72=2 DR Wagon
74=4 DR Wagon
77=Open Body 93" Whlbase
78=Open Body 103" Whlbase - Export
T=2WD
J,N=4WD
U=4WD (RHD)

BODY STYLES:

YJ=Wrangler (4X4) "S"
Weangler (4X4) SE
Wrangler (4X4) Sahara
Wrangler (4X4) Renegade
XJ=Cherokee SE
Cherokee Sport
Cherokee Country
ZJ=Grand Cherokee SE
Grand Cherokee Laredo
Grand Cherolee Limited
ZG=Grand Cherokee European
Y1=Wrangler
X1=Cherokee
Z1=Grand Cherokee
KDX=Vehicles

AR = Use as Required - = Non Illustrated Part P.A.R. = Paint as Required

« RETURN TO GROUP INDEX

CONTROL, CLUTCH CHEROKEE-RHD
Figure 6-330

6-330B

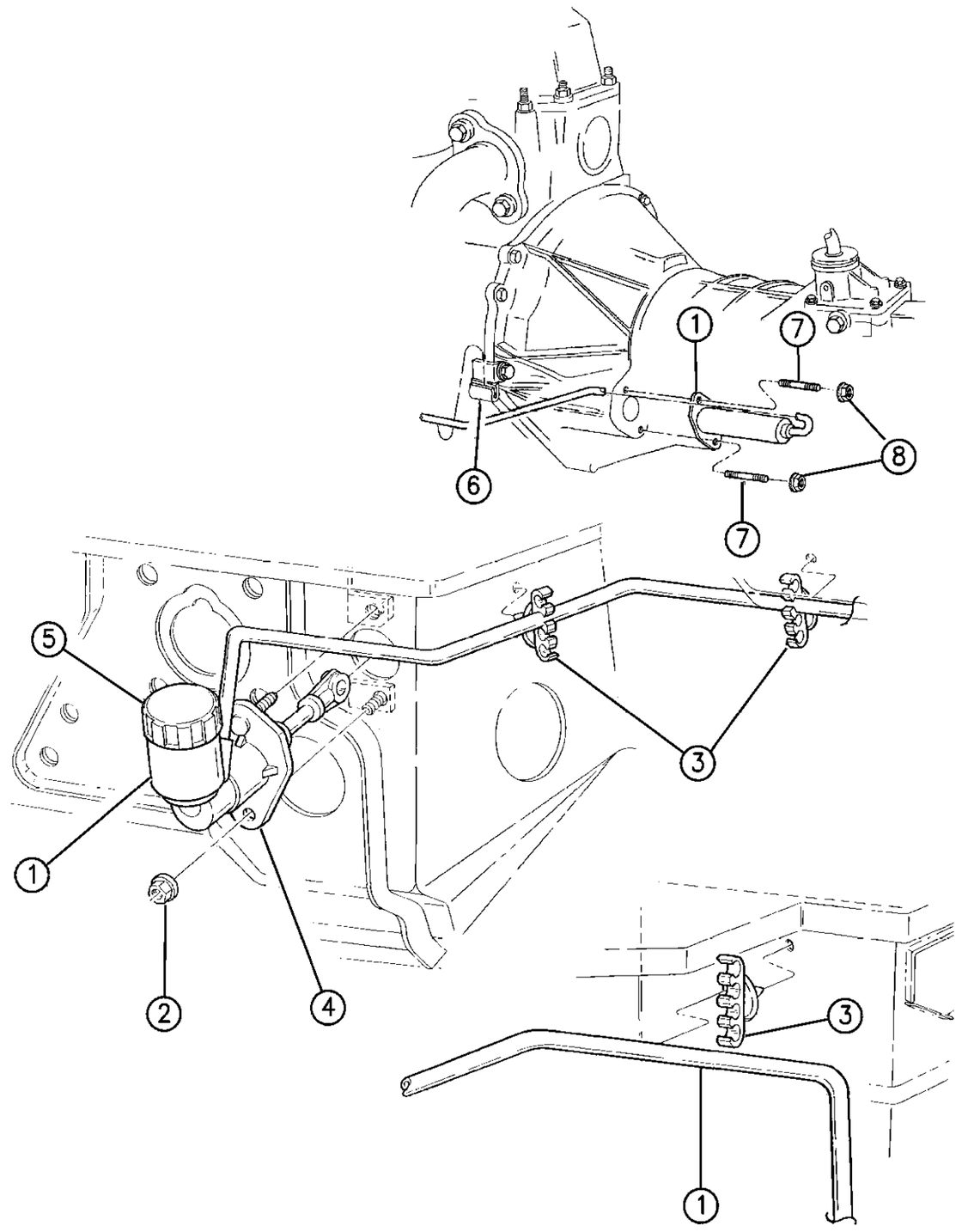

ITEM	PART NUMBER	QTY	BODY	MODEL	DESCRIPTION
1					HYD ASSEMBLY, Clutch Actuator ***
	5210 7702	1			2.5l, & 4.0l Gas Engine
	5210 7703	1			2.5l Diesel Engine
	5300 8471	1			BRACKET, HYD Clutch Line
	6500 182	2			NUT, Master Cylinder Mount M8x1.25
2	1150 2811	3			NUT, Master Cylinder HYD Clutch Mount M8x1.25
3	3200 0404	3			CLIP, HYD Line to Dash Reinf.
4		1			BRACKET, Service with Item 1
5	4741 671	1			CAP, Reservoir
6	5300 8471	1			BRACKET, Slave Cylinder to Housing
7	6032 878	2			STUD, Slave Cylinder to Housing .312-18x2.00
8	0152 472	2			NUT, Slave Cylinder Mount 5/16-18 Hex Flg Lk.
	3420 1633	1		X1	CLIP, HYD Line to Firewall

MODEL CODES:

72=2 DR Wagon
74=4 DR Wagon
77=Open Body 93" Whlbase
78=Open Body 103" Whlbase - Export
T=2WD
J,N=4WD
U=4WD (RHD)

BODY STYLES:

YJ=Wrangler (4X4) "S"
Weangler (4X4) SE
Wrangler (4X4) Sahara
Wrangler (4X4) Renegade
XJ=Cherokee SE
Cherokee Sport
Cherokee Country
ZJ=Grand Cherokee SE
Grand Cherokee Laredo
Grand Cherolee Limited
ZG=Grand Cherokee European
Y1=Wrangler
X1=Cherokee
Z1=Grand Cherokee
KDX=Vehicles

AR = Use as Required - = Non Illustrated Part P.A.R. = Paint as Required

« RETURN TO GROUP INDEX

CONTROL, CLUTCH ZJ - GRAND CHEROKEE
Figure 6-340

6–340

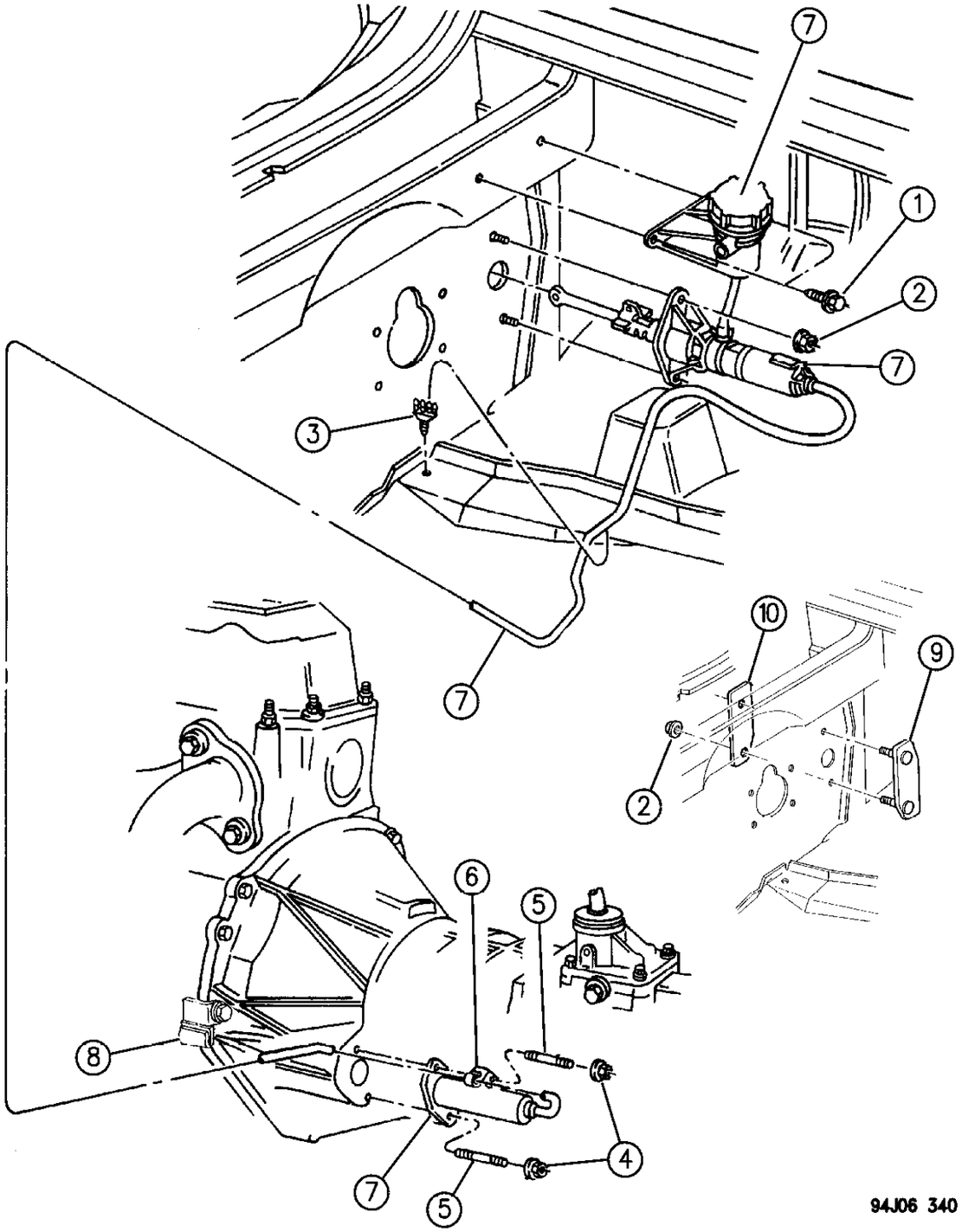

ITEM	PART NUMBER	QTY	BODY	MODEL	DESCRIPTION
1	J943 1948	2			SCREW, Hex Wa Hd.
2	6101 467	2			NUT, Hex Flg Lk. M8x1.25
3	5200 7533	1			CLIP, 3 Way
4	J400 6725	2			NUT, Hex Flg Lk.
5	6032 878	2			STUD, .312-18x2.00
6	5300 8471	1			BRACKET
7	5210 7624	1			HYD ASSEMBLY, Clutch ***
8	5300 8471	1			BRACKET, HYD Clutch Tube
9	5208 7581	1			PLATE, Cover Clutch w/46RH Trans.
10	5300 9231	1			PLATE, Back Trans. Control Module w/46RH Trans.
	6500 603	2			SCREW, Projection Welded Clutch Cover Plate w/46RH Trans. M8x1.25x25
	5300 1242	1			CLIP, Clutch Tube to Wheel House (Vacuum Tube #3)

MODEL CODES:

72=2 DR Wagon
74=4 DR Wagon
77=Open Body 93" Whlbase
78=Open Body 103" Whlbase - Export
T=2WD
J,N=4WD
U=4WD (RHD)

BODY STYLES:

YJ=Wrangler (4X4) "S"
Weangler (4X4) SE
Wrangler (4X4) Sahara
Wrangler (4X4) Renegade
XJ=Cherokee SE
Cherokee Sport
Cherokee Country
ZJ=Grand Cherokee SE
Grand Cherokee Laredo
Grand Cherolee Limited
ZG=Grand Cherokee European
Y1=Wrangler
X1=Cherokee
Z1=Grand Cherokee
KDX=Vehicles

AR = Use as Required - = Non Illustrated Part P.A.R. = Paint as Required

« RETURN TO GROUP INDEX

PEDAL, CLUTCH WRANGLER, YJ
Figure 6-410

6-410

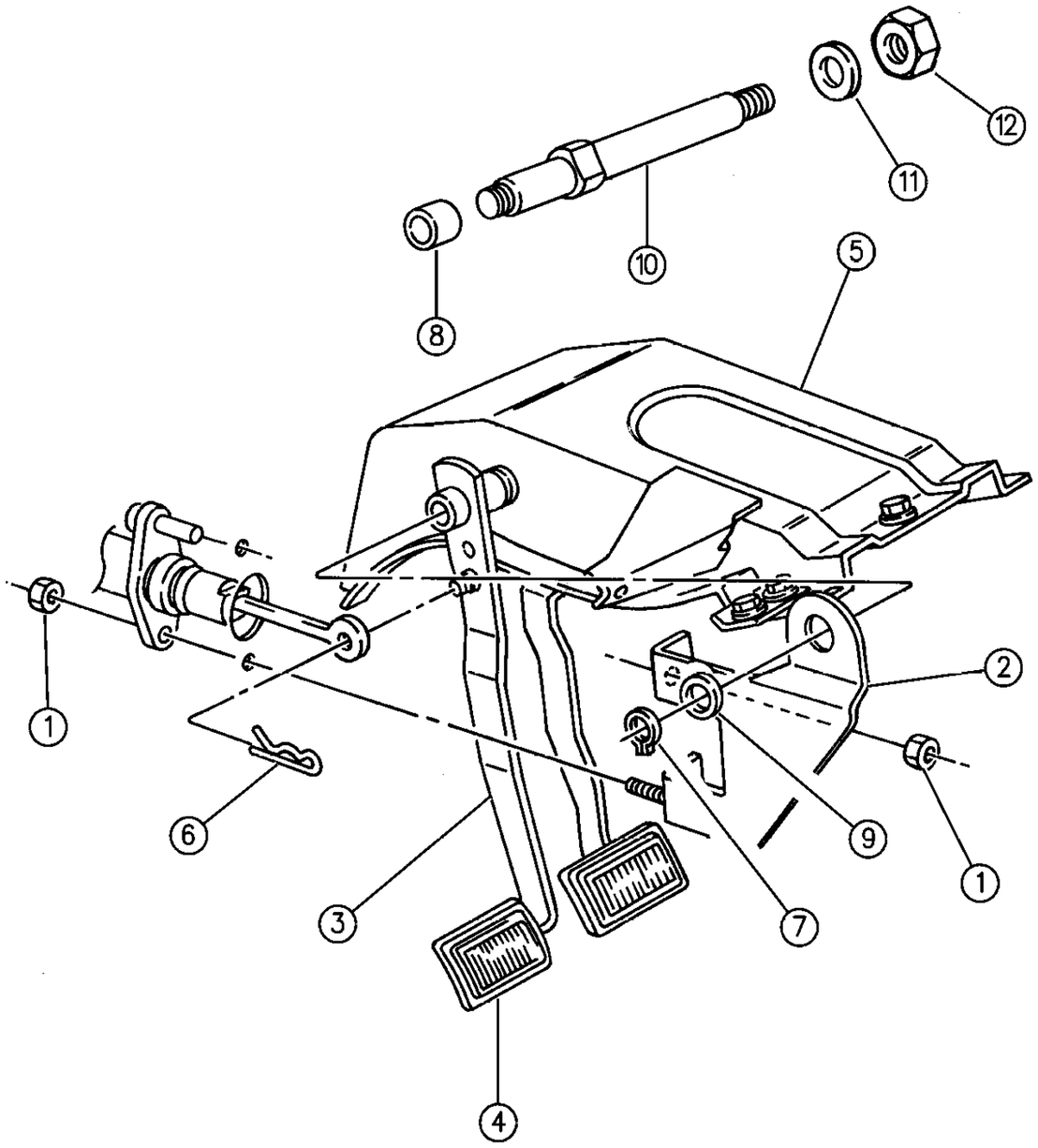

ITEM	PART NUMBER	QTY	BODY	MODEL	DESCRIPTION
1	0152 342	2			NUT, .312-18
2	5300 7885	1			BRACE, Clutch Pedal
3	5300 7964	1			PEDAL, Clutch
	5600 8745	1	YJ		RHD
4	5200 2750	1			COVER, Clutch Pedal
5	5207 7558	1			BRACKET, Steering Column and Brake Pedal
6	J400 6723	1			PIN, Self Locking
7	J400 6471	1			RING, Retaining
8	J094 6177	2			BEARING, Clutch Pedal
9	J535 1844	2			WASHER
10	5207 8599	1			SHAFT, Clutch Pedal
11	J012 0396	1			WASHER
12	J400 4311	1			LOCK NUT, 1/2-20

MODEL CODES:

72=2 DR Wagon
74=4 DR Wagon
77=Open Body 93" Whlbase
78=Open Body 103" Whlbase - Export
T=2WD
J,N=4WD
U=4WD (RHD)

BODY STYLES:

YJ=Wrangler (4X4) "S"
Weangler (4X4) SE
Wrangler (4X4) Sahara
Wrangler (4X4) Renegade

XJ=Cherokee SE
Cherokee Sport
Cherokee Country

ZJ=Grand Cherokee SE
Grand Cherokee Laredo
Grand Cherolee Limited
ZG=Grand Cherokee European

Y1=Wrangler
X1=Cherokee
Z1=Grand Cherokee
KDX=Vehicles

AR = Use as Required - = Non Illustrated Part P.A.R. = Paint as Required

PEDAL, CLUTCH CHEROKEE
Figure 6-420

6-420

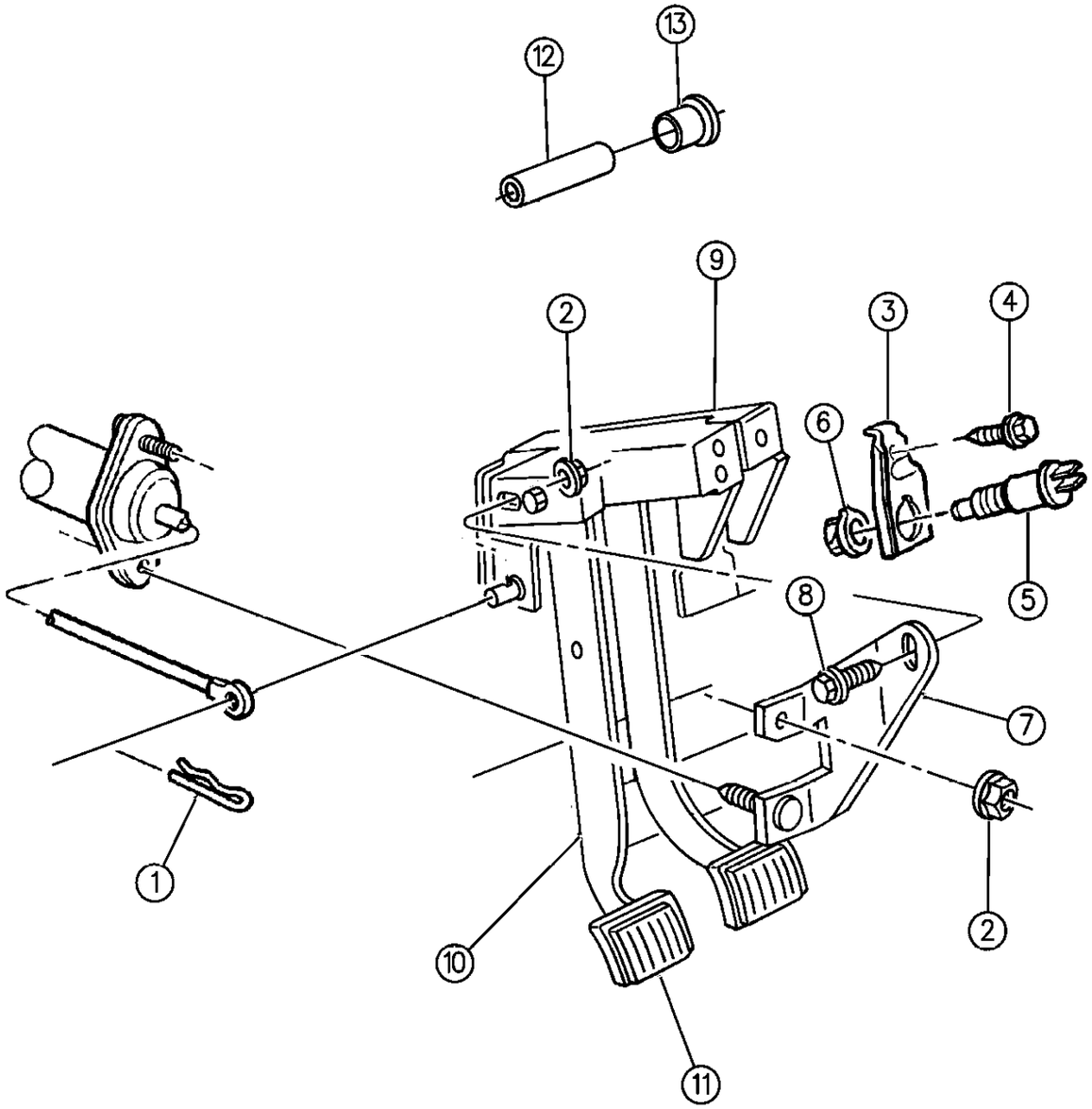

ITEM	PART NUMBER	QTY	BODY	MODEL	DESCRIPTION
1	J400 6723	1			PIN, Self Locking
2	1150 2811	AR			NUT, Hex Flg Lock
3	5300 1430	1			BRACKET, Cruise Command Man/Dump Switch w/2.1 L Diesel Engine w/Speed Control
4	3420 1707	1			SCREW, Hex Wa Hd. M4.8x1.59x13.00 2.1 L Diesel Engine
5	3600 0136	1			SWITCH, Clutch Valve 2.1 L Diesel Engine w/Speed Control
6	J400 6789	1			CLIP, Tubular
7	5300 7884	1			BRACE, HYD Clutch Master Cylinder
8		1			BOLT, Hex Flg Hd. M8x1.25x20.00 (Not Serviced)
9	5207 7942	1			BRACKET, Brake and Clutch Pedal Support
10					PEDAL, Clutch
	5207 8069	1			1994
	5207 8888	1			1995-96
11	5200 2750	1			PAD, Clutch Pedal
12	5300 0636	1			SLEEVE, Clutch Pedal
13	J322 5981	AR			BUSHING, Brake and Clutch Shaft

MODEL CODES:

72=2 DR Wagon
74=4 DR Wagon
77=Open Body 93" Whlbase
78=Open Body 103" Whlbase - Export
T=2WD
J,N=4WD
U=4WD (RHD)

BODY STYLES:

YJ=Wrangler (4X4) "S"
Weangler (4X4) SE
Wrangler (4X4) Sahara
Wrangler (4X4) Renegade
XJ=Cherokee SE
Cherokee Sport
Cherokee Country
ZJ=Grand Cherokee SE
Grand Cherokee Laredo
Grand Cherolee Limited
ZG=Grand Cherokee European
Y1=Wrangler
X1=Cherokee
Z1=Grand Cherokee
KDX=Vehicles

AR = Use as Required - = Non Illustrated Part P.A.R. = Paint as Required

« RETURN TO GROUP INDEX

PEDAL, CLUTCH CHEROKEE-RHD
Figure 6-430

6-430A

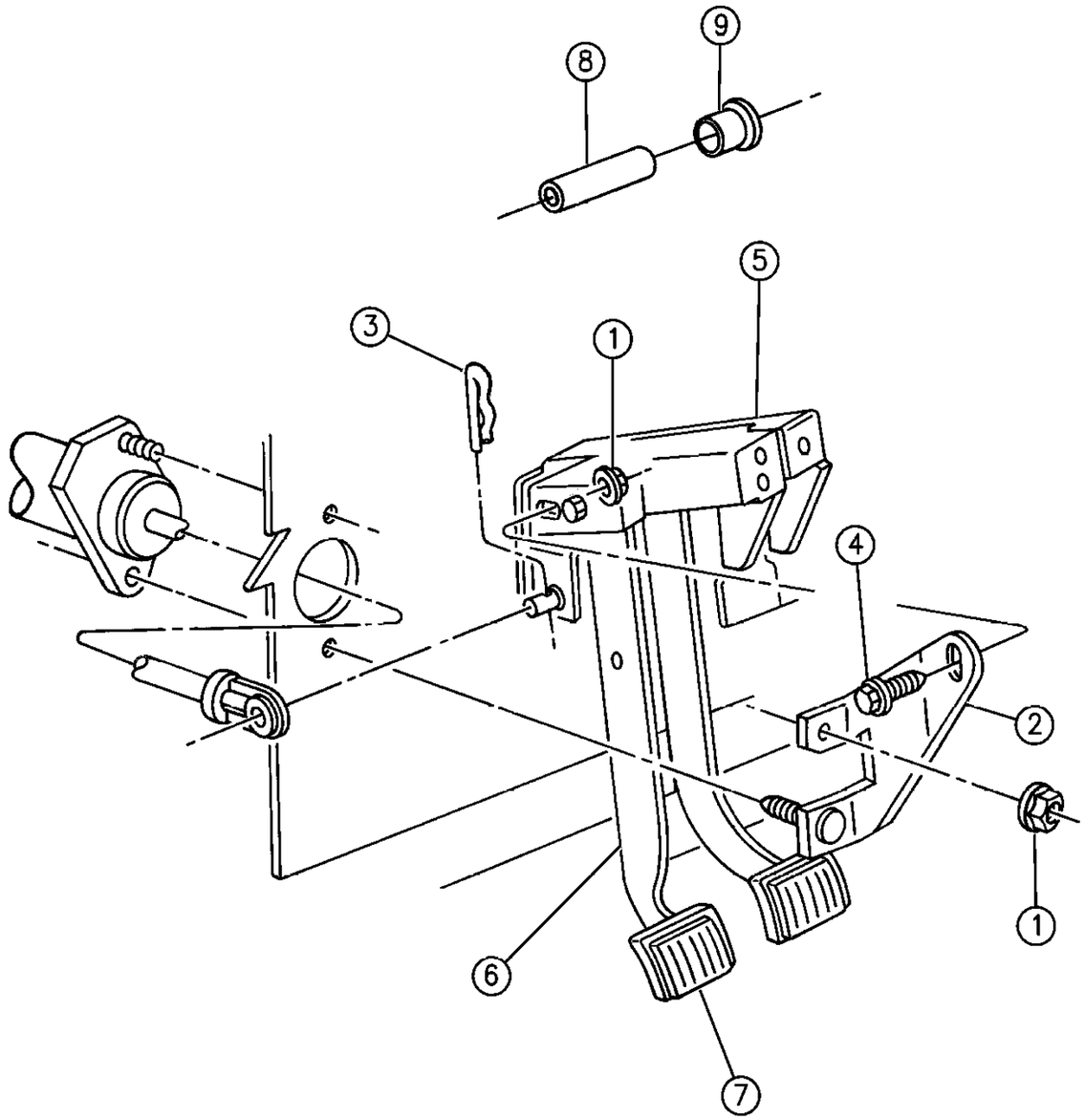

94J06 430A

ITEM	PART NUMBER	QTY	BODY	MODEL	DESCRIPTION
1	1150 2811	1			NUT, Hx Flg Lock
2	5300 7884	1			BRACE, HYD Clutch Master Cylinder
3	J400 6723	1			PIN, Cotter
4		1			BOLT, Hex Flg Hd. M8x1.25x20.00 (Not Serviced)
5	5207 7942	1			BRACKET, Brake and Clutch Pedal Support
6					PEDAL, Clutch
	5207 8069	1			1994
	5207 8888	1			1995
7	5200 2750	1			PAD, Clutch Pedal
8	5300 0636	1			SLEEVE, Clutch Pedal
9	J322 5981	AR			BUSHING, Brake and Clutch Shaft

MODEL CODES:

72=2 DR Wagon
74=4 DR Wagon
77=Open Body 93" Whlbase
78=Open Body 103" Whlbase - Export
T=2WD
J,N=4WD
U=4WD (RHD)

BODY STYLES:

YJ=Wrangler (4X4) "S"
Weangler (4X4) SE
Wrangler (4X4) Sahara
Wrangler (4X4) Renegade

XJ=Cherokee SE
Cherokee Sport
Cherokee Country

ZJ=Grand Cherokee SE
Grand Cherokee Laredo
Grand Cherolee Limited
ZG=Grand Cherokee European

Y1=Wrangler
X1=Cherokee
Z1=Grand Cherokee
KDX=Vehicles

AR = Use as Required - = Non Illustrated Part P.A.R. = Paint as Required

CLUTCH PEDAL GRAND CHEROKEE
Figure 6-440

6-440

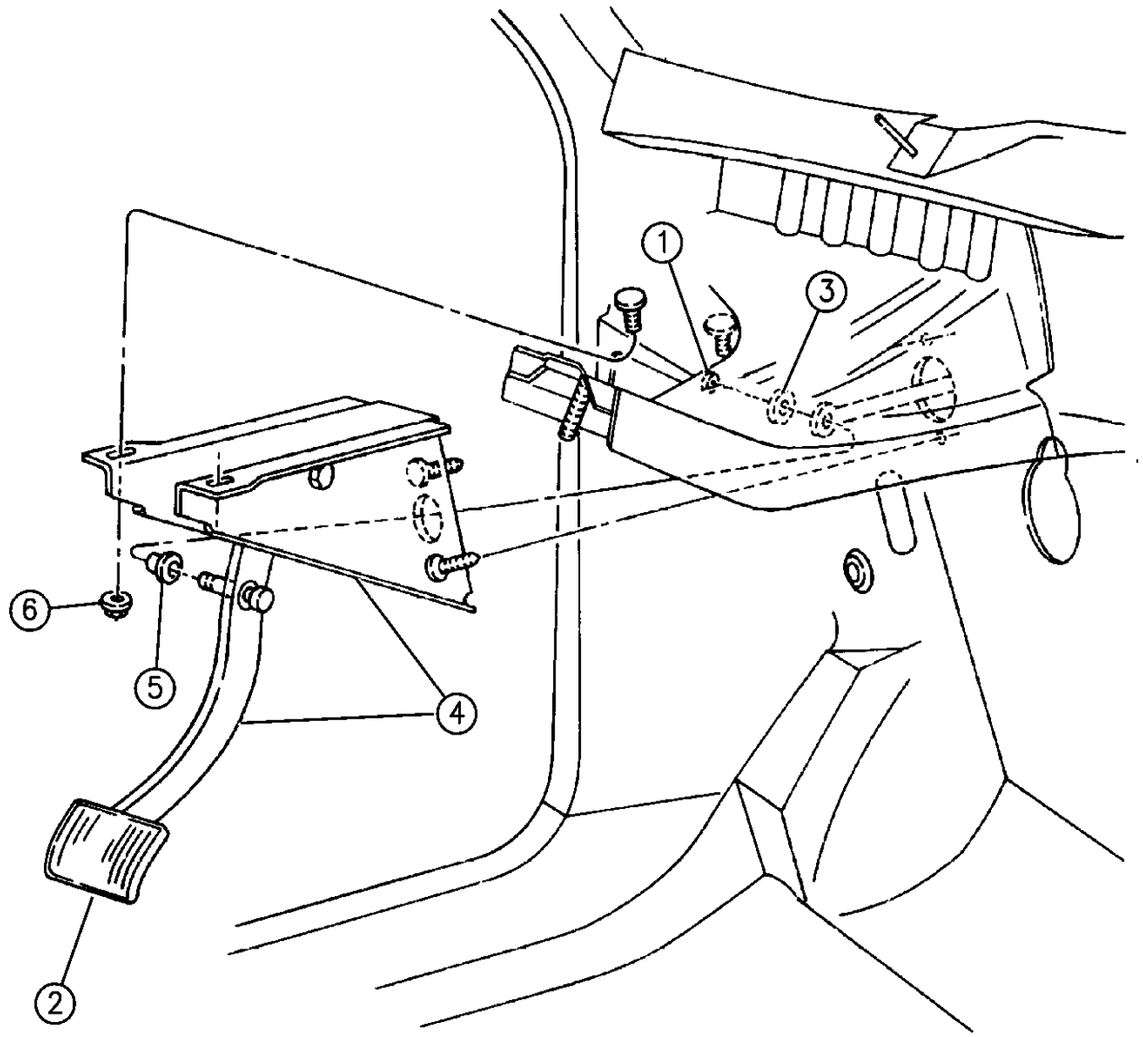

94J06 440

ITEM	PART NUMBER	QTY	BODY	MODEL	DESCRIPTION
1	4294 036	1			RING, Retaining
2	5200 2750	1			COVER, Clutch Pedal
3	0120 395	1			WASHER, Flat
4	5207 8514	1			PEDAL, Clutch
	5305 4121	1	ZG	RHD	
	5300 8899	1			BRACKET, Clutch Pedal
	5305 4126	1	ZG		
	J322 5981	2			BUSHING
	5300 0637	1			SLEEVE
	6100 206	1			BOLT, Hex Hd. M12x1.75-70
5	4446 361	1			BUSHING
6	6101 467	4			NUT, Hex Flg Lk. M8x1.25
	6502 585	1			NUT, Lock Hex M12x1.75

MODEL CODES:

72=2 DR Wagon
74=4 DR Wagon
77=Open Body 93" Whlbase
78=Open Body 103" Whlbase - Export
T=2WD
J,N=4WD
U=4WD (RHD)

BODY STYLES:

YJ=Wrangler (4X4) "S"
Weangler (4X4) SE
Wrangler (4X4) Sahara
Wrangler (4X4) Renegade
XJ=Cherokee SE
Cherokee Sport
Cherokee Country
ZJ=Grand Cherokee SE
Grand Cherokee Laredo
Grand Cherolee Limited
ZG=Grand Cherokee European
Y1=Wrangler
X1=Cherokee
Z1=Grand Cherokee
KDX=Vehicles

AR = Use as Required - = Non Illustrated Part P.A.R. = Paint as Required

GROUP-7
COOLING

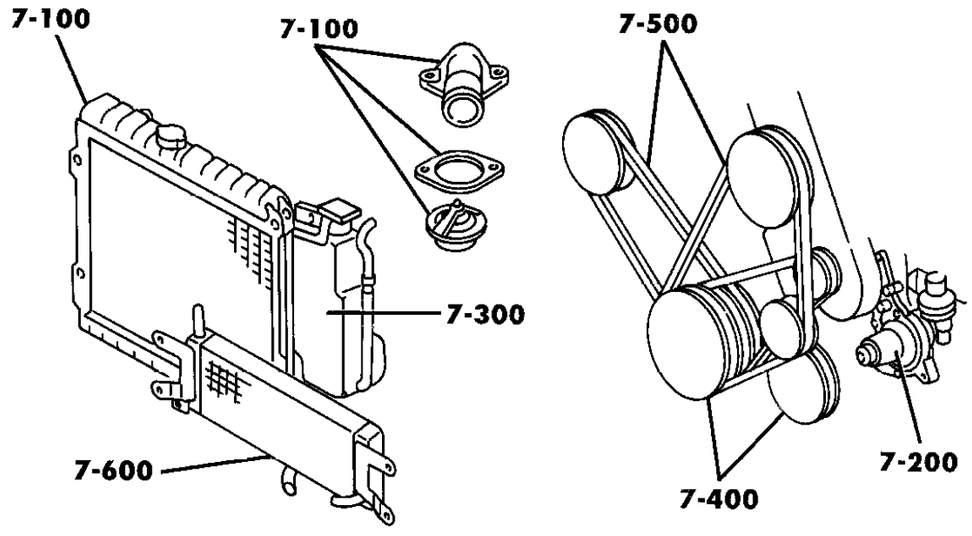

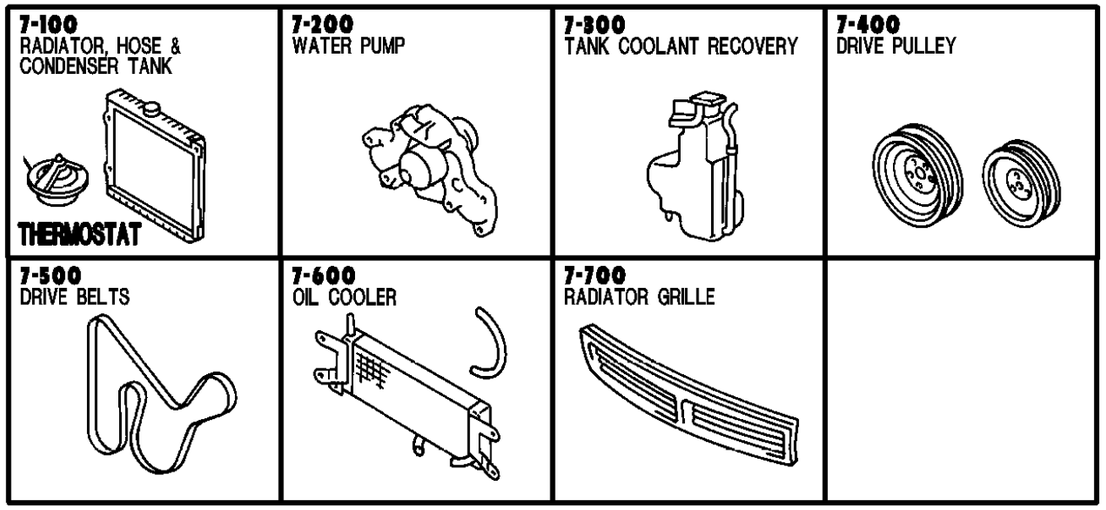

GROUP 7 - COOLING

ILLUSTRATION TITLE **GROUP-FIG. NO.**

RADIATOR AND RELATED PARTS

RADIATOR AND RELATED PARTS FOUR CYLINDER ENGINE YJ BODY . . . . . Fig. 7-105
PULLER FAN 2.5L ENGINE RHD Y1 BODY . . . . . Fig. 7-107
RADIATOR AND RELATED PARTS SIX CYLINDER ENGINE YJ BODY . . . . . Fig. 7-110
PUSHER FAN 4.0L ENGINE RHD Y1 BODY . . . . . Fig. 7-115
RADIATOR AND RELATED PARTS FOUR CYLINDER ENGINE XJ BODY . . . . . Fig. 7-120
RADIATOR AND RELATED PARTS SIX CYLINDER ENGINE XJ BODY . . . . . Fig. 7-130
RADIATOR AND RELATED PARTS 2.1 DIESEL ENGINE XJ BODY . . . . . Fig. 7-140
RADIATOR AND RELATED PARTS 2.5 DIESEL ENGINE XJ BODY . . . . . Fig. 7-145
CHARGE AIR COOLER 2.5L DIESEL ENGINE XJ BODY . . . . . Fig. 7-147
RADIATOR AND RELATED PARTS SIX CYLINDER ENGINE ZJ, ZG BODY . . . . . Fig. 7-150
RADIATOR AND RELATED PARTS EIGHT CYLINDER ENGINE ZJ, ZG BODY . . . . . Fig. 7-160
RADIATOR AND RELATED PARTS 2.5 DIESEL ENGINE ZG BODY . . . . . Fig. 7-165
INTERCOOLER, RADIATOR 2.5L DIESEL ENGINE ZG BODY . . . . . Fig. 7-170

WATER PUMP AND RELATED PARTS

WATER PUMP YJ BODY . . . . . Fig. 7-205
WATER PUMP AND RELATED PARTS 2.5, 4.0 AND 2.1 DIESEL ENGINE XJ, ZJ, ZG BODY . . . . . Fig. 7-210
WATER PUMP AND WATER MANIFOLD 2.5 DIESEL ENGINE XJ BODY . . . . . Fig. 7-215
WATER PUMP AND RELATED PARTS 5.2 ENGINE ZJ, ZG BODY . . . . . Fig. 7-220
WATER PUMP AND WATER MANIFOLD 2.5 DIESEL ENGINE ZG BODY . . . . . Fig. 7-225

COOLANT RESERVE TANK

COOLANT TANK XJ, YJ BODY . . . . . Fig. 7-305
COOLANT TANK ZJ, ZG BODY . . . . . Fig. 7-310

DRIVE PULLEYS

DRIVE PULLEYS 1994-95 YJ, XJ BODY . . . . . Fig. 7-405
DRIVE PULLEYS 2.5L ENGINE, 1996 XJ BODY . . . . . Fig. 7-407
DRIVE PULLEYS 4.0L ENGINE, 1996 XJ BODY . . . . . Fig. 7-408
DRIVE PULLEYS 4.0L ENGINE, 1996 XJ BODY RHD . . . . . Fig. 7-409
DRIVE PULLEYS 2.1 DIESEL ENGINE, 1994 XJ BODY . . . . . Fig. 7-410
DRIVE PULLEYS 2.5 DIESEL ENGINE XJ BODY . . . . . Fig. 7-415
DRIVE PULLEYS 4.0 ENGINE ZJ, ZG BODY . . . . . Fig. 7-420
DRIVE PULLEYS 5.2 ENGINE ZJ, ZG BODY . . . . . Fig. 7-430
DRIVE PULLEYS 2.5 DIESEL ENGINE ZG BODY . . . . . Fig. 7-440

DRIVE BELTS

DRIVE BELTS YJ BODY . . . . . Fig. 7-505
DRIVE BELTS XJ BODY . . . . . Fig. 7-510
DRIVE BELT ZJ, ZG BODY . . . . . Fig. 7-520

GROUP 7 - COOLING

ILLUSTRATION TITLE	GROUP-FIG. NO.
OIL COOLER AND LINES	
OIL COOLER LINES AUTOMATIC TRANSMISSION YJ BODY	Fig. 7-605
OIL COOLER AND LINES 5.2 ENGINE ZJ, ZG BODY	Fig. 7-610
OIL COOLER AND LINES 4.0 ENGINE ZJ, ZG BODY	Fig. 7-620
OIL COOLER AND LINES AUTOMATIC TRANSMISSION XJ BODY	Fig. 7-630
GRILLE AND RELATED PARTS	
GRILLE AND RELATED PARTS YJ BODY	Fig. 7-705
GRILLE AND RELATED PARTS XJ BODY	Fig. 7-710
GRILLE AND RELATED PARTS ZJ, ZG BODY	Fig. 7-720

RADIATOR AND RELATED PARTS FOUR CYLINDER ENGINE YJ BODY
Figure 7-105

7-105B

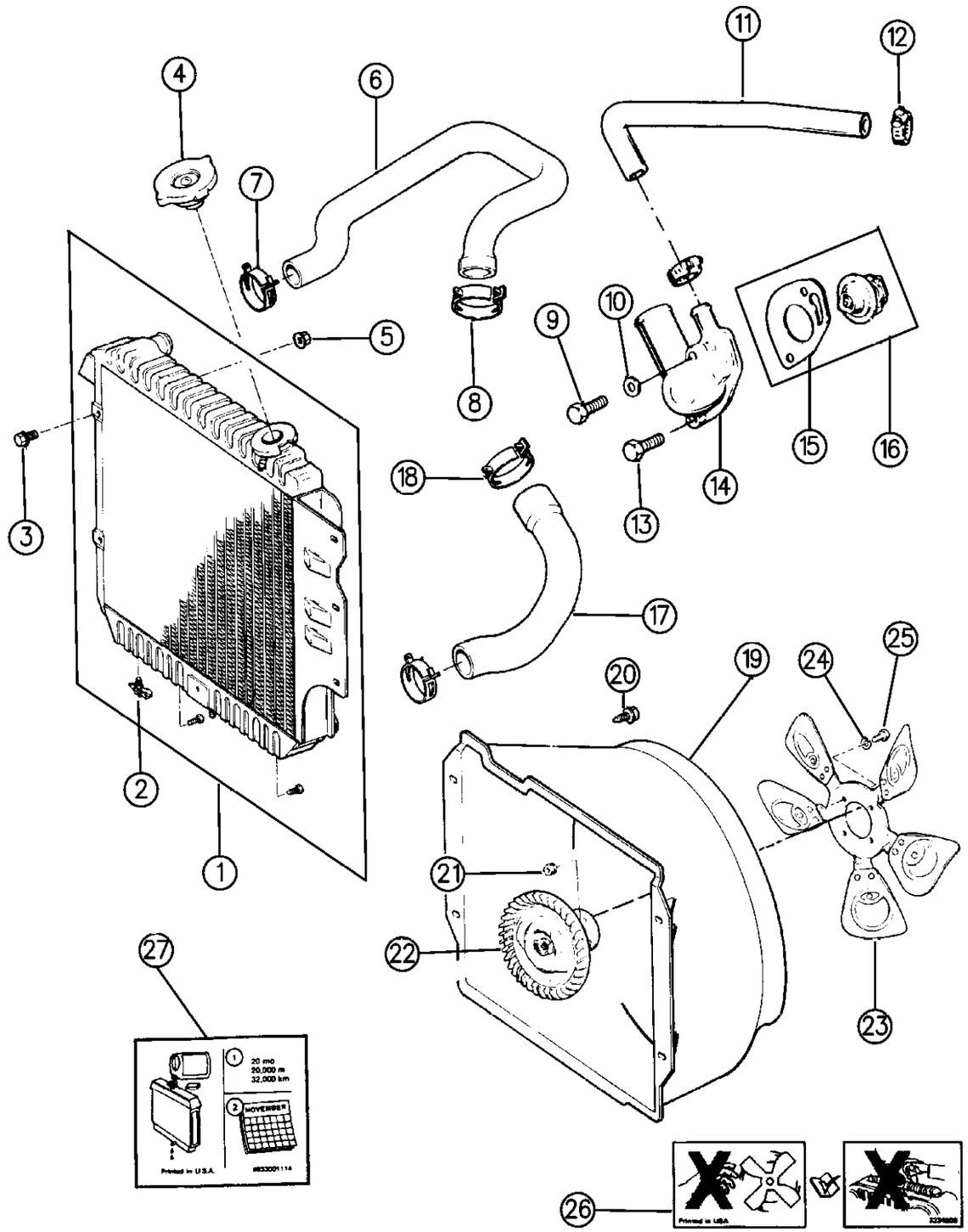

ITEM	PART NUMBER	QTY	BODY	MODEL	DESCRIPTION
1					RADIATOR
	5202 8120	1			Auto. Trans.
	5202 8112	1			Manual Trans.
	5202 9230	1			RHD
	5534 5471	1			BRACKET, Radiator Rod Support EGYPT (Severe use air filtration)
2					DRAINCOCK
	J316 6547	1			Metal
	4773 259	1			Plastic
3	J400 6906	6			BOLT
4	3781 830	1			CAP, Radiator
5	J400 4201	6			NUT
6	5200 3911	1			HOSE, Inlet
	5503 6757	1			RHD
7	3200 2983	3			CLAMP
8	5200 5580	2			CLAMP
9	J400 6951	1			BOLT
10	J012 0393	1			WASHER
11	5600 4710	1			HOSE
	5200 2831	1			KDX, Egypt or Venezuela
12	6502 017	2			CLAMP
13	J812 1298	1			BOLT
14	5300 6192	1			HOUSING, Thermostat
15	5302 0547	1			GASKET
16	8350 1426	1			PACKAGE, Thermostat
17	5200 3910	1			HOSE, Outlet
	5503 6764	1			RHD, 1994
	5602 2042	1			RHD, 1995
					HOSE, w/Sleeve, RHD
	5503 6756	1			Core to Pump
	5503 6765	1			Lower Radiator to Pump
18	3200 2366	1			CLAMP
19					SHROUD
	5202 8300	1			Except RHD
	5202 8355	1			RHD
20	0154 552	1			SCREW
21	0154 591	4			NUT
22	J324 1858	1			DRIVE, Fan
23	5200 4266	1			FAN, Cooling
24	J012 0214	8			WASHER
25	6034 860	4			BOLT
26	J323 4806	1			LABEL, Fan

MODEL CODES:

72=2 DR Wagon
74=4 DR Wagon
77=Open Body 93" Whlbase
78=Open Body 103" Whlbase - Export
T=2WD
J,N=4WD
U=4WD (RHD)

BODY STYLES:

YJ=Wrangler (4X4) "S"
Weangler (4X4) SE
Wrangler (4X4) Sahara
Wrangler (4X4) Renegade

XJ=Cherokee SE
Cherokee Sport
Cherokee Country

ZJ=Grand Cherokee SE
Grand Cherokee Laredo
Grand Cherolee Limited
ZG=Grand Cherokee European

Y1=Wrangler
X1=Cherokee
Z1=Grand Cherokee
KDX=Vehicles

AR = Use as Required - = Non Illustrated Part P.A.R. = Paint as Required

RADIATOR AND RELATED PARTS FOUR CYLINDER ENGINE YJ BODY
Figure 7-105

7-105B

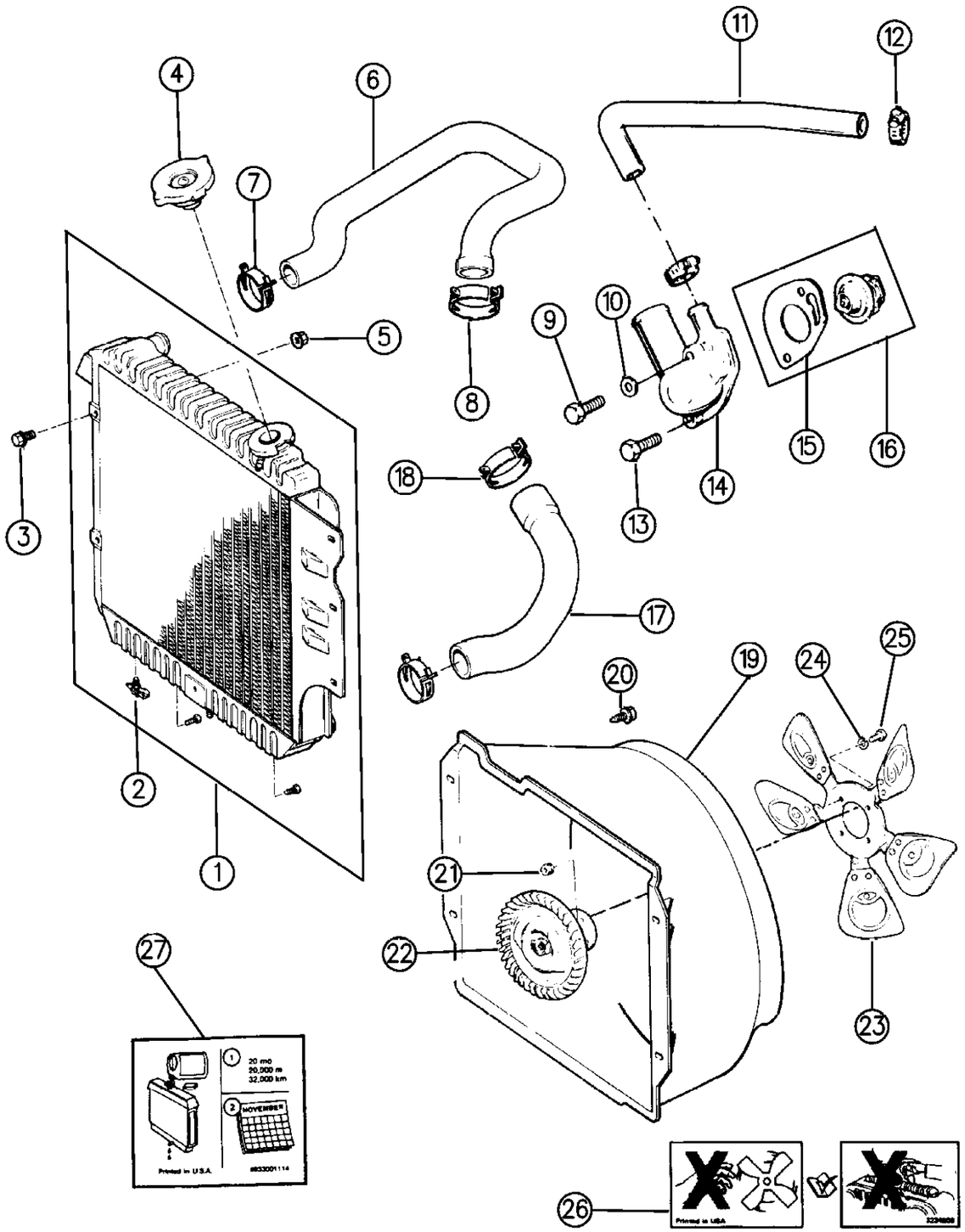

94J07 105

ITEM	PART NUMBER	QTY	BODY	MODEL	DESCRIPTION
27	3300 1114	1			LABEL, Radiator

MODEL CODES:

72=2 DR Wagon
74=4 DR Wagon
77=Open Body 93" Whlbase
78=Open Body 103" Whlbase - Export
T=2WD
J,N=4WD
U=4WD (RHD)

BODY STYLES:

YJ=Wrangler (4X4) "S"
Weangler (4X4) SE
Wrangler (4X4) Sahara
Wrangler (4X4) Renegade

XJ=Cherokee SE
Cherokee Sport
Cherokee Country

ZJ=Grand Cherokee SE
Grand Cherokee Laredo
Grand Cherolee Limited
ZG=Grand Cherokee European

Y1=Wrangler
X1=Cherokee
Z1=Grand Cherokee
KDX=Vehicles

AR = Use as Required - = Non Illustrated Part P.A.R. = Paint as Required

PULLER FAN 2.5L ENGINE RHD Y1 BODY
Figure 7-107

7–107

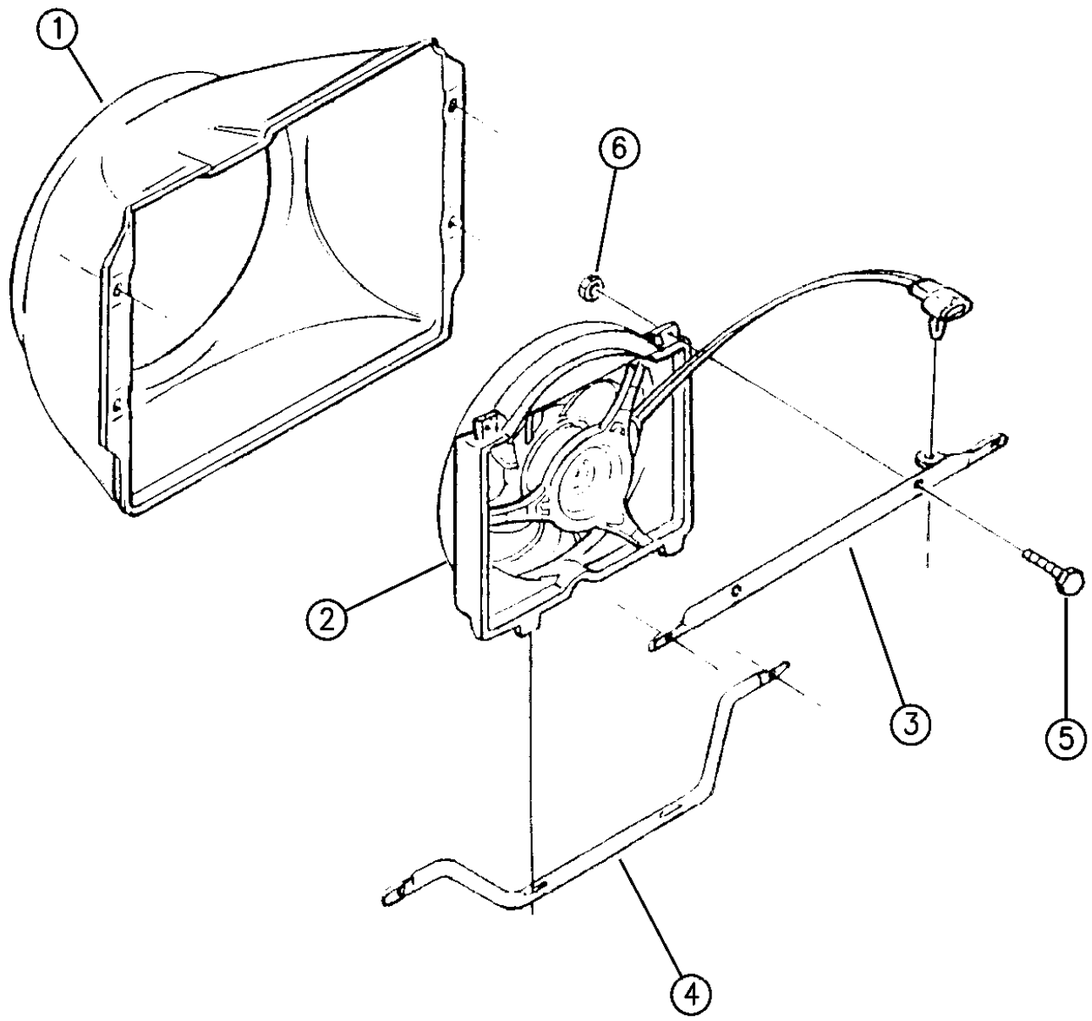

94J07 107

ITEM	PART NUMBER	QTY	BODY	MODEL	DESCRIPTION
1	5202 8355	1			SHROUD, Radiator
2	5207 9445	1			FAN, Puller
3	5207 9189	1			BRACKET, Upper Fan Mtg.
4	5207 9192	1			BRACKET, Lower Fan Mtg.
5		2			BOLT, #10-24x1.00" (DNS)
6		2			NUT, #10x24 (DNS)

MODEL CODES:

72=2 DR Wagon
74=4 DR Wagon
77=Open Body 93" Whlbase
78=Open Body 103" Whlbase - Export
T=2WD
J,N=4WD
U=4WD (RHD)

BODY STYLES:

YJ=Wrangler (4X4) "S"
Weangler (4X4) SE
Wrangler (4X4) Sahara
Wrangler (4X4) Renegade
XJ=Cherokee SE
Cherokee Sport
Cherokee Country
ZJ=Grand Cherokee SE
Grand Cherokee Laredo
Grand Cherolee Limited
ZG=Grand Cherokee European
Y1=Wrangler
X1=Cherokee
Z1=Grand Cherokee
KDX=Vehicles

AR = Use as Required - = Non Illustrated Part P.A.R. = Paint as Required

« RETURN TO GROUP INDEX

RADIATOR AND RELATED PARTS SIX CYLINDER ENGINE YJ BODY
Figure 7-110

7-110A

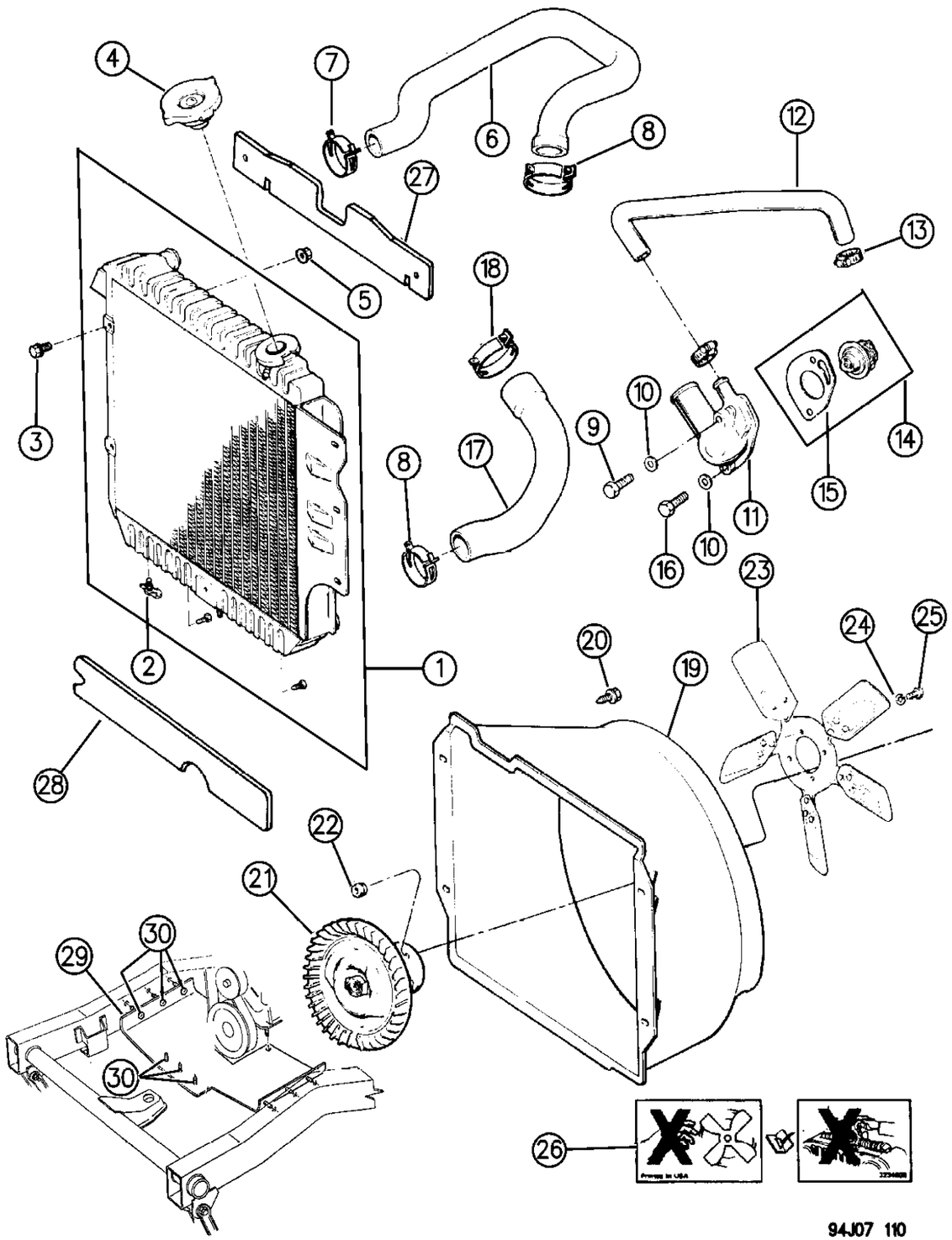

ITEM	PART NUMBER	QTY	BODY	MODEL	DESCRIPTION
1					RADIATOR
	5202 9160	1			Auto Trans.
	5202 9113	1			Manual Trans.
	5202 9231	1			RHD
	5202 9050	1			Auto Trans., Middle East
	5202 9049	1			Manual Trans., Middle East
2					DRAINCOCK
	J316 6547	1			Metal
	4773 259	1			Plastic
3	J400 6906	6			BOLT
4	3781 830	1			CAP, Radiator
5	J400 4201	6			NUT
6	5200 5794	1			HOSE, Inlet
	5200 2702	1			KDX/Egypt
	5503 6766	1			RHD
	5503 6759	1			HOSE, w/Sleeve, Thermostat to Core, RHD
7	3200 2983	3			CLAMP
8	5200 5580	2			CLAMP
9	J400 6951	1			BOLT
10	3200 2256	2			WASHER
11	5300 6192	1			HOUSING, Thermostat
12	5600 4708	1			HOSE
13	2448 770	2			CLAMP
14	8350 1426	1			PACKAGE, Thermostat
15	5302 0547	1			GASKET
16	J812 1298	1			BOLT
17	5200 5918	1			HOSE, Outlet
	5503 6767	1			RHD
18	3200 2366	1			CLAMP
19					SHROUD
	5200 4214	1			Except RHD
	5202 8356	1			RHD
20	J400 3069	4			SCREW
21	4637 575	1			DRIVE, Fan
	5202 8365	1			MIDEAST
22	J027 1184	4			NUT
23	5200 7225	1			FAN, Cooling
	5202 8332	1			MIDEAST
24	J012 0214	4			WASHER
25	6034 860	4			BOLT
26	J323 4806	1			LABEL, Fan
27	5202 7678	1			SEAL, Radiator, Upper

MODEL CODES:

72=2 DR Wagon
74=4 DR Wagon
77=Open Body 93" Whlbase
78=Open Body 103" Whlbase - Export
T=2WD
J,N=4WD
U=4WD (RHD)

BODY STYLES:

YJ=Wrangler (4X4) "S"
Weangler (4X4) SE
Wrangler (4X4) Sahara
Wrangler (4X4) Renegade
XJ=Cherokee SE
Cherokee Sport
Cherokee Country
ZJ=Grand Cherokee SE
Grand Cherokee Laredo
Grand Cherolee Limited
ZG=Grand Cherokee European
Y1=Wrangler
X1=Cherokee
Z1=Grand Cherokee
KDX=Vehicles

AR = Use as Required - = Non Illustrated Part P.A.R. = Paint as Required

RADIATOR AND RELATED PARTS SIX CYLINDER ENGINE YJ BODY
Figure 7-110

7-110A

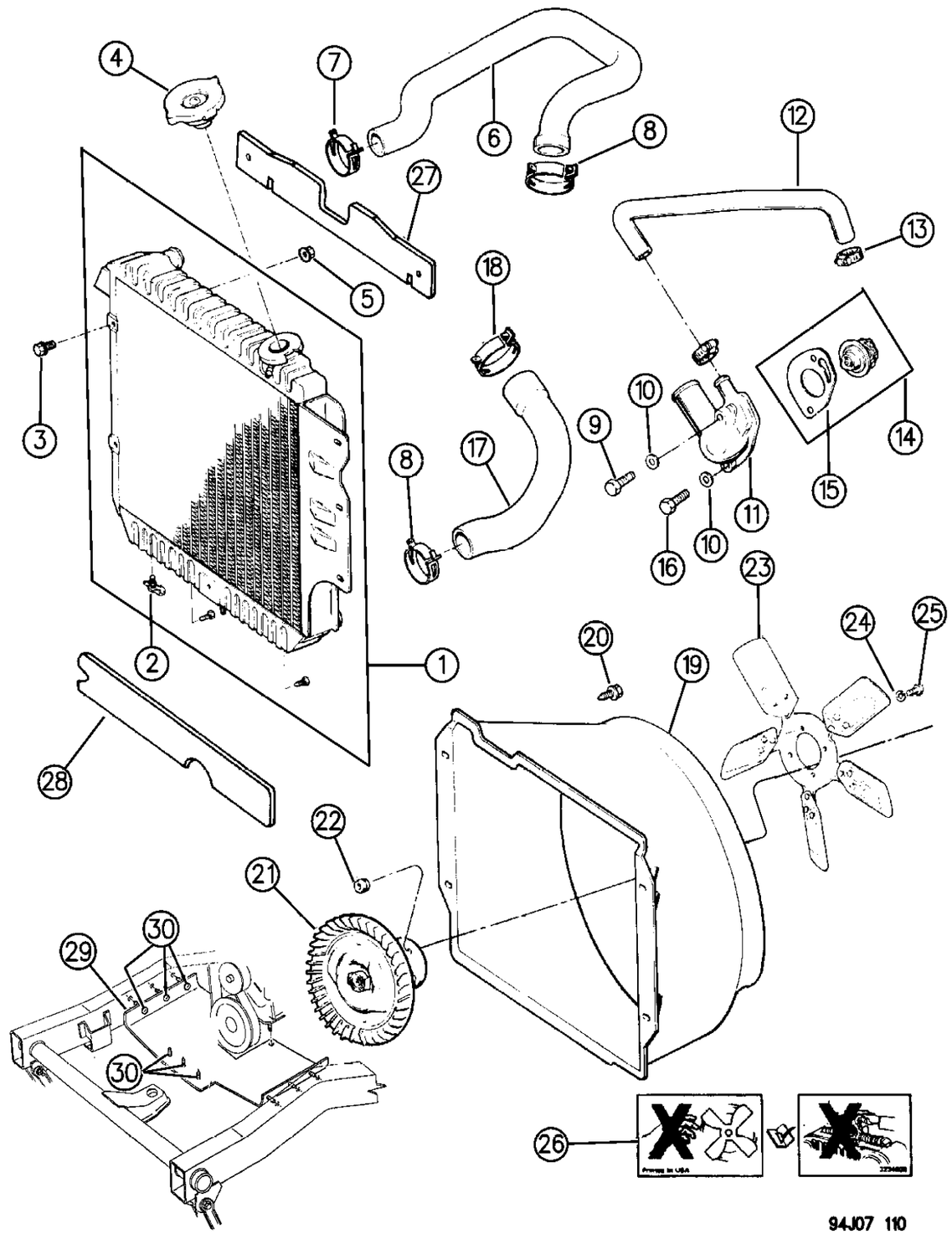

ITEM	PART NUMBER	QTY	BODY	MODEL	DESCRIPTION
28	5202 7679	1			SEAL, Radiator, Lower
29	5523 4592	1			SHIELD, Alternator Splash
30		AR			FASTENER (DNS)

MODEL CODES:

72=2 DR Wagon
74=4 DR Wagon
77=Open Body 93" Whlbase
78=Open Body 103" Whlbase - Export
T=2WD
J,N=4WD
U=4WD (RHD)

BODY STYLES:

YJ=Wrangler (4X4) "S"
Weangler (4X4) SE
Wrangler (4X4) Sahara
Wrangler (4X4) Renegade

XJ=Cherokee SE
Cherokee Sport
Cherokee Country

ZJ=Grand Cherokee SE
Grand Cherokee Laredo
Grand Cherolee Limited
ZG=Grand Cherokee European

Y1=Wrangler
X1=Cherokee
Z1=Grand Cherokee
KDX=Vehicles

AR = Use as Required - = Non Illustrated Part P.A.R. = Paint as Required

PUSHER FAN 4.0L ENGINE RHD Y1 BODY
Figure 7-115

7–115

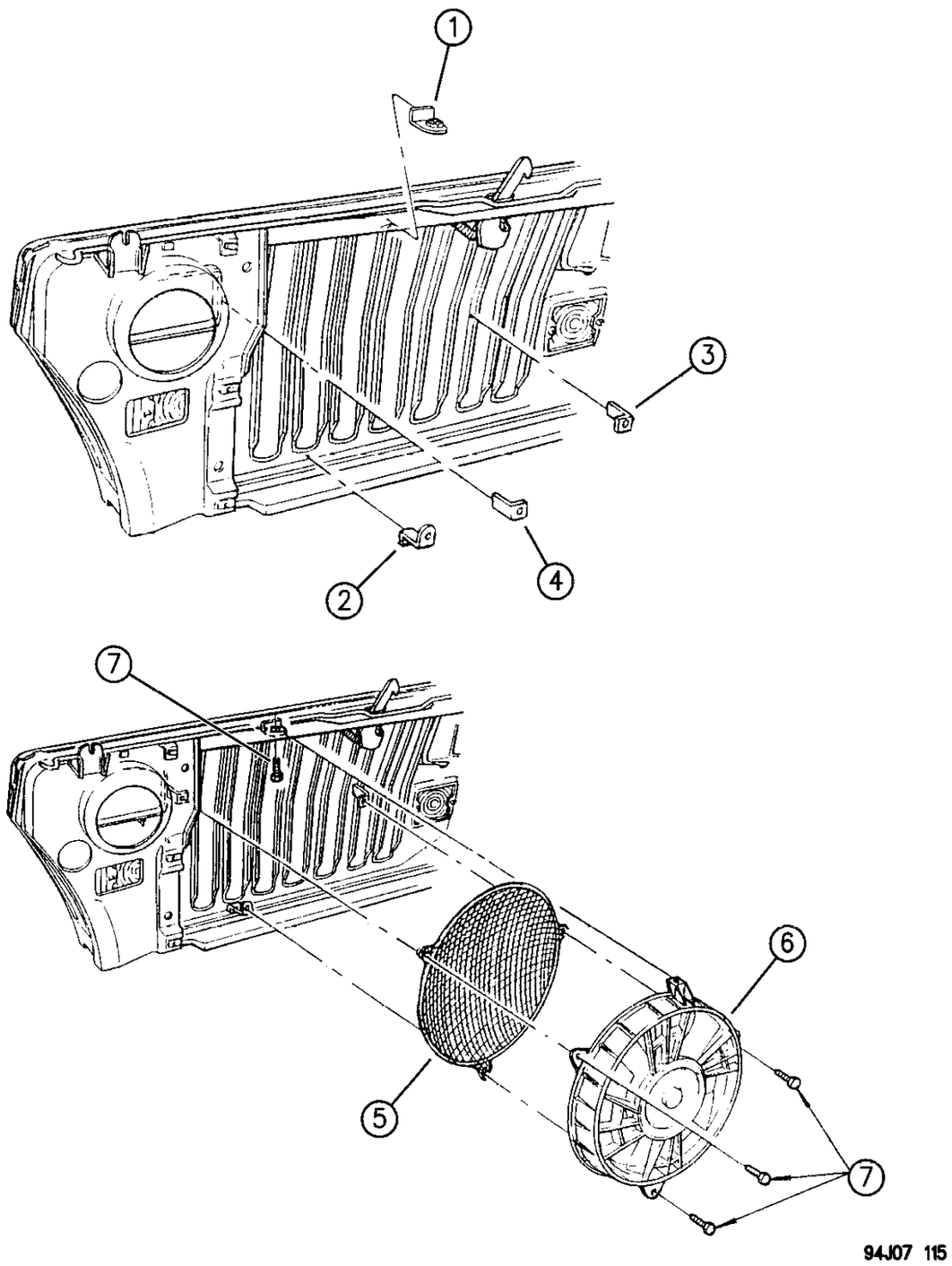

ITEM	PART NUMBER	QTY	BODY	MODEL	DESCRIPTION
1	5202 8395	1			BRACKET, Fan Mtg., Top
2	5207 9194	1			BRACKET, Fan Mtg., Lower
3	5207 9195	1			BRACKET, Fan Mtg., Right
4	5207 9196	1			BRACKET, Fan Mtg., Left
5	5503 6864	1			SCREEN, Fan
6	5202 8392	1			FAN, Pusher
					TUBE, Pusher Fan Condensor Jumper
	5503 6862	1			Inlet
	5503 6863	1			Outlet
7	5503 6864	AR			BOLT

MODEL CODES:

72=2 DR Wagon
74=4 DR Wagon
77=Open Body 93" Whlbase
78=Open Body 103" Whlbase - Export
T=2WD
J,N=4WD
U=4WD (RHD)

BODY STYLES:

YJ=Wrangler (4X4) "S"
Weangler (4X4) SE
Wrangler (4X4) Sahara
Wrangler (4X4) Renegade
XJ=Cherokee SE
Cherokee Sport
Cherokee Country
ZJ=Grand Cherokee SE
Grand Cherokee Laredo
Grand Cherolee Limited
ZG=Grand Cherokee European
Y1=Wrangler
X1=Cherokee
Z1=Grand Cherokee
KDX=Vehicles

AR = Use as Required - = Non Illustrated Part P.A.R. = Paint as Required

« RETURN TO GROUP INDEX

RADIATOR AND RELATED PARTS FOUR CYLINDER ENGINE XJ BODY
Figure 7-120

7-120A

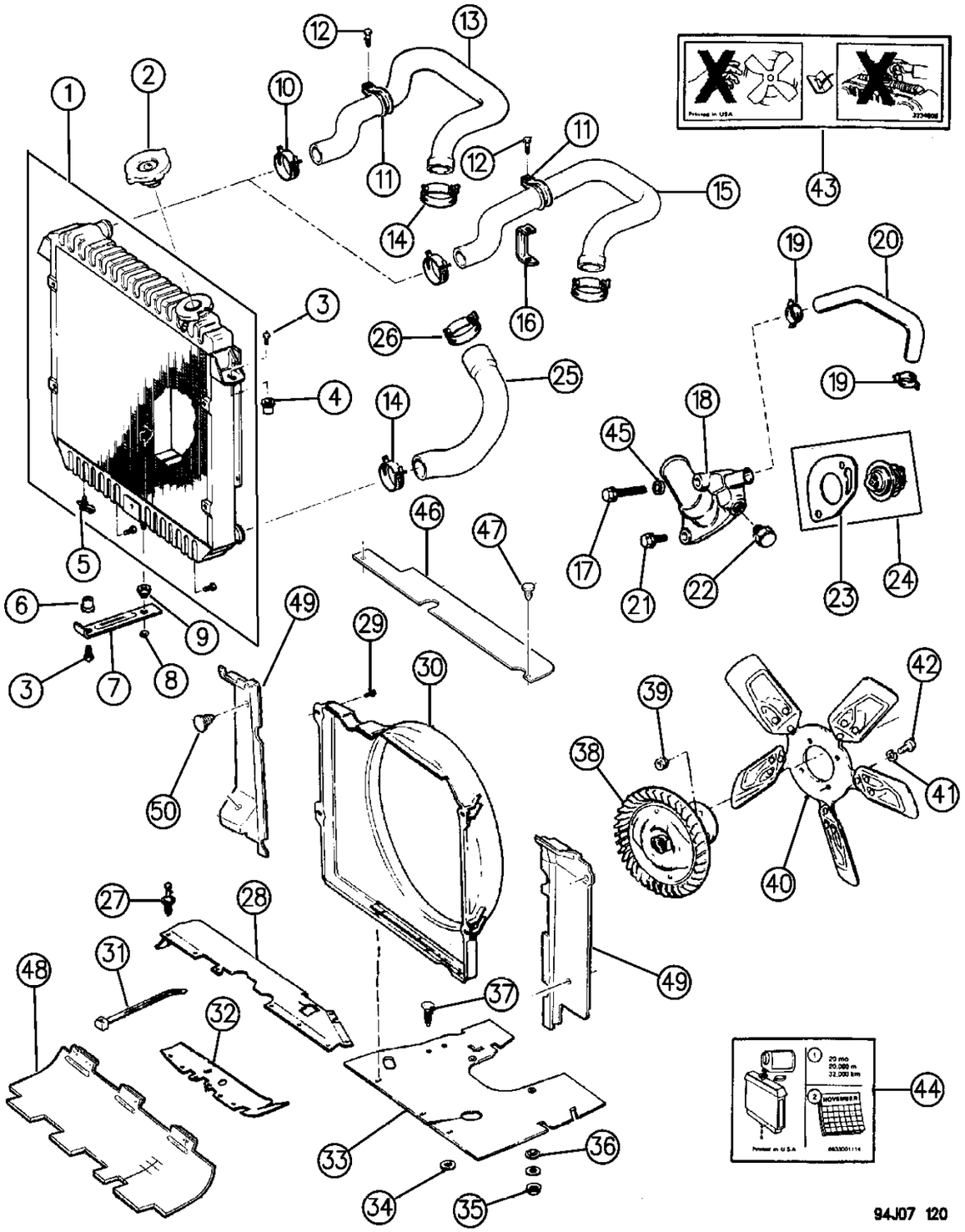

ITEM	PART NUMBER	QTY	BODY	MODEL	DESCRIPTION
1					RADIATOR
	5202 9118	1			Auto Trans., 1994
	5202 9047	1			Auto Trans., 1995-96
	5202 8115	1			Manual Trans., 1994
	5202 9046	1			Manual Trans., 1995-96
	5202 7791	1			RHD, 1994
	5202 9052	1		X1	RHD, 1995-96
	5202 9048	1			RHD, 1995-96
					SEAL, Radiator
	5202 8176	1			Upper to Crossmember
	5202 8179	1			Lower to Crossmember
	5202 8180-1	1			Side to Bracket
					SUPPORT, Radiator Mtg., RHD
	5502 7532	1			Right
	5534 5743	1			Left
	5502 7533	1			CROSSMEMBER, Radiator, Upper RHD
2	3781 830	1			CAP, Radiator
3	1150 2628	3			BOLT
4	3420 1348	2			NUT
5	J316 6547	1			DRAINCOCK
6	3420 1493	1			NUT
7	5300 0510	1			BRACE, Radiator
8	3420 1494	1			RING
9	5300 0511	1			GROMMET
10	3200 2983	3			CLAMP
11	J012 5931	1			CLIP
12	1150 0985	1			SCREW
13					HOSE, Inlet
	5200 3789	1			w/o A/C
	5202 8024	1			w/A/C
	5200 6499	1			RHD, 1994
	5200 6500	1			RHD, 1995-96
14	5200 5580	2			CLAMP
15	5202 8024	1			HOSE, Inlet, w/A/C
16	5200 3943	1			BRACKET, Hose Support, Upper
17	6034 927	1			BOLT
18	5300 6192	1			HOUSING, Thermostat
	5300 5529	1			EXPORT
19	J320 3076	2			CLAMP
20					HOSE
	5600 4786	1			EFI Engine
	5200 4317	1			Carbureted Engine

MODEL CODES:

72=2 DR Wagon
74=4 DR Wagon
77=Open Body 93" Whlbase
78=Open Body 103" Whlbase - Export
T=2WD
J,N=4WD
U=4WD (RHD)

BODY STYLES:

YJ=Wrangler (4X4) "S"
Weangler (4X4) SE
Wrangler (4X4) Sahara
Wrangler (4X4) Renegade
XJ=Cherokee SE
Cherokee Sport
Cherokee Country
ZJ=Grand Cherokee SE
Grand Cherokee Laredo
Grand Cherolee Limited
ZG=Grand Cherokee European
Y1=Wrangler
X1=Cherokee
Z1=Grand Cherokee
KDX=Vehicles

AR = Use as Required - = Non Illustrated Part P.A.R. = Paint as Required

RADIATOR AND RELATED PARTS FOUR CYLINDER ENGINE XJ BODY
Figure 7-120

7-120A

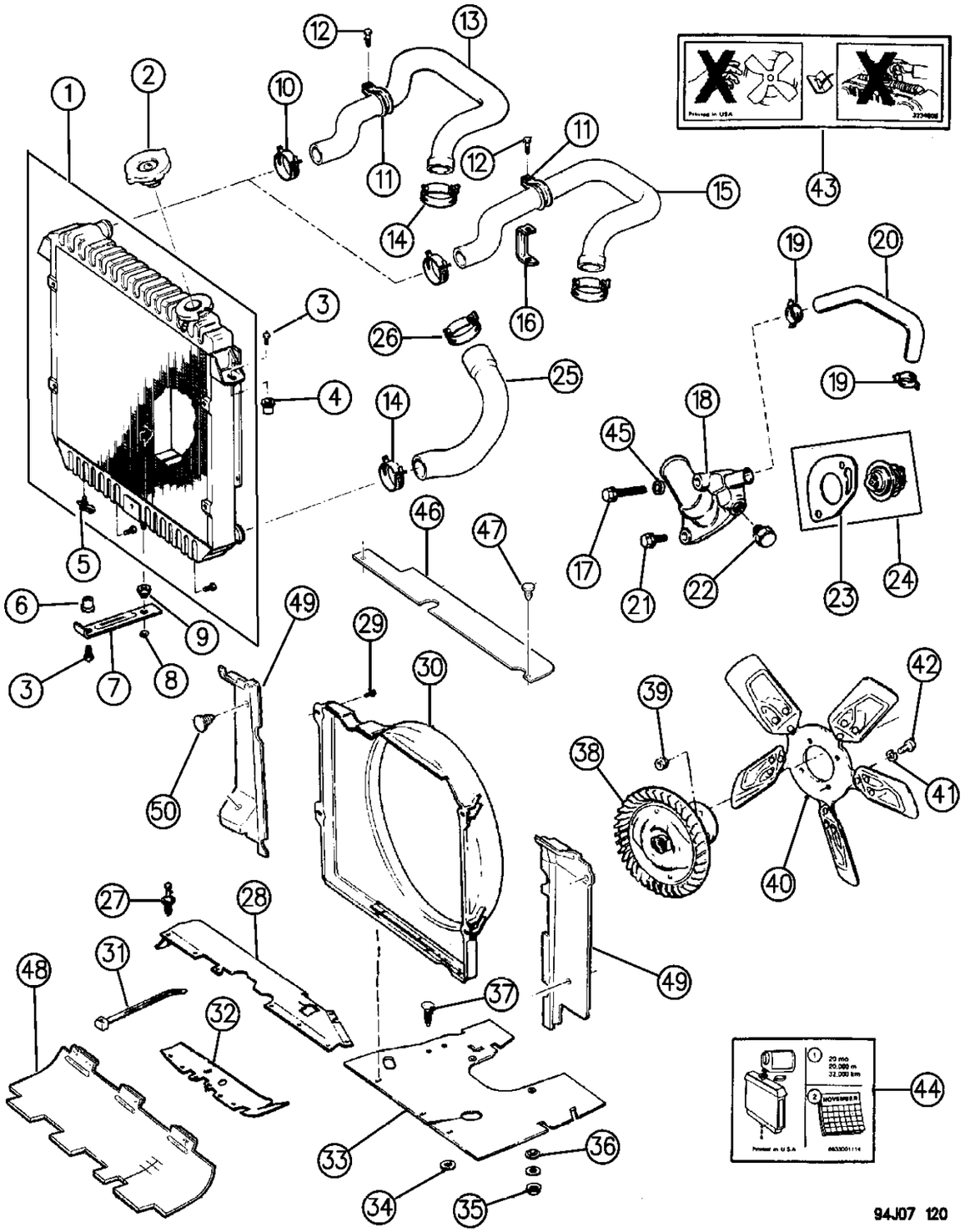

ITEM	PART NUMBER	QTY	BODY	MODEL	DESCRIPTION
	5503 5528	1			RHD
21	6034 927	1			BOLT
22	J010 3877	1			PLUG
23	5302 0547	1			GASKET
24					PACKAGE, Thermostat
	8350 1426	1			
	8350 4378	1			EUROPE
25					HOSE, Outlet
	5200 3790	1			
	5200 6500	1			RHD, 1994
	5200 6499	1			RHD, 1995-96
	5602 2039	1			1995-96 Severe Use
	4882 099	1			SENSOR, Hose
26	3200 2366	1			CLAMP
27	3420 1621	14			RIVET
28	5500 3056	1			SEAL, Radiator
29	J318 9013	4			SCREW
30	5202 7762	1			SHROUD, Fan
	5202 8148	1			RHD
	5203 0035AB	1			SHROUD, w/Fan, Severe Use
31	J322 3227	1			STRAP
32	5500 3057	1			SEAL, Radiator
33	5517 4736	1			SHIELD, Engine Splash
	5523 4858	1			RHD
34	J044 6188	2			WASHER
35	J400 4587	2			NUT
36	J400 0271	2			NUT, Push
37					FASTENER
	J400 4919	3			.80"
	3420 2787	2			1.12"
38	5202 8428	1			DRIVE, Fan
39	J027 1184	4			NUT
40	5202 8331	1			FAN, Cooling
	5602 2058	1	X1		Severe Use
41	J012 0214	4			WASHER
42	6034 860	4			BOLT
43	J323 4806	1			LABEL, Fan
44	3300 1114	1			LABEL, Radiator
45	J012 0393	2			WASHER
46	5202 8176	1			SEAL, Upper Crossmember
47	6501 477	2			RETAINER
48	5202 8179	1			SEAL, Lower Crossmember

MODEL CODES:

72=2 DR Wagon
74=4 DR Wagon
77=Open Body 93" Whlbase
78=Open Body 103" Whlbase - Export
T=2WD
J,N=4WD
U=4WD (RHD)

BODY STYLES:

YJ=Wrangler (4X4) "S"
Weangler (4X4) SE
Wrangler (4X4) Sahara
Wrangler (4X4) Renegade
XJ=Cherokee SE
Cherokee Sport
Cherokee Country
ZJ=Grand Cherokee SE
Grand Cherokee Laredo
Grand Cherolee Limited
ZG=Grand Cherokee European
Y1=Wrangler
X1=Cherokee
Z1=Grand Cherokee
KDX=Vehicles

AR = Use as Required - = Non Illustrated Part P.A.R. = Paint as Required

RADIATOR AND RELATED PARTS FOUR CYLINDER ENGINE XJ BODY
Figure 7-120

7-120A

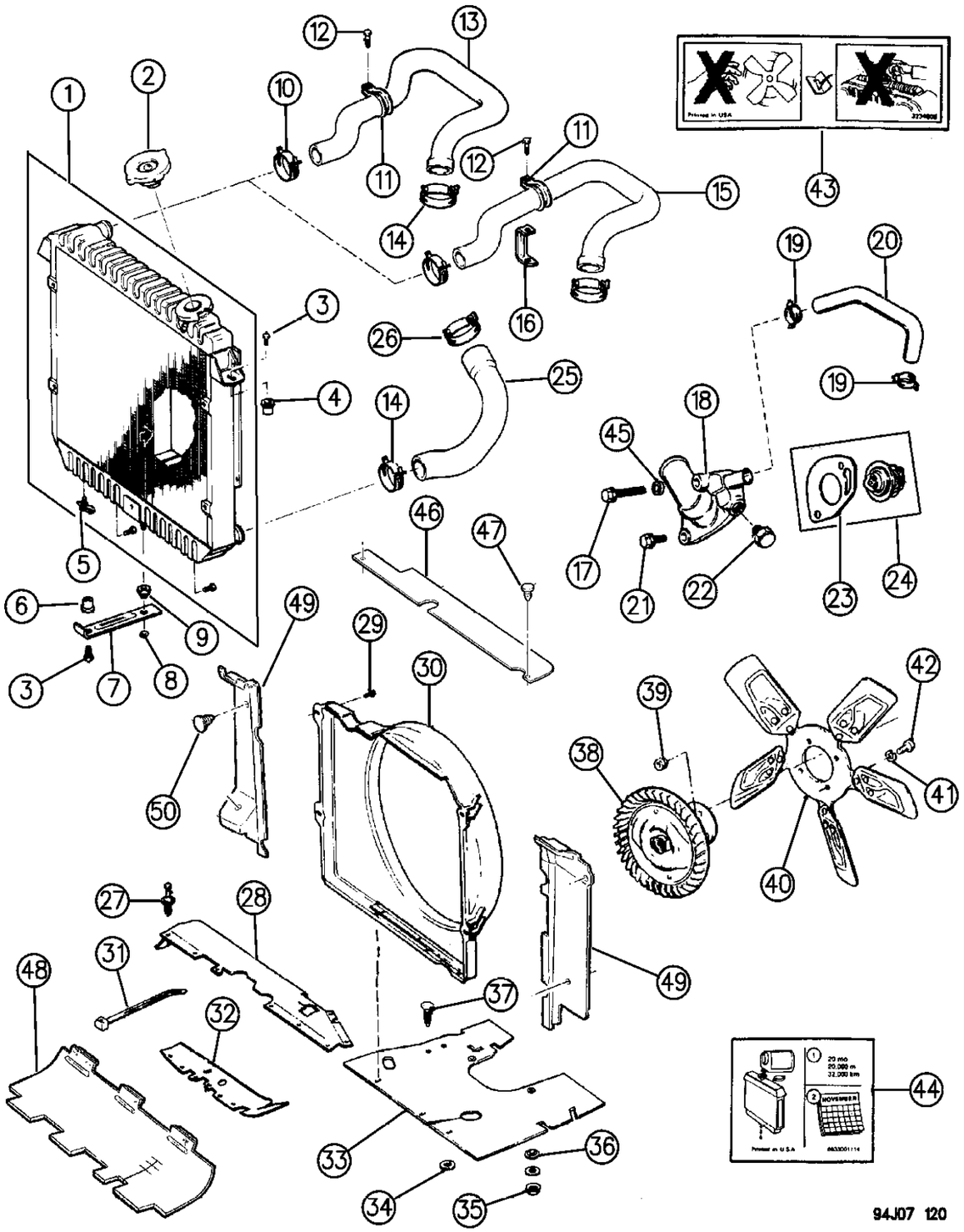

ITEM	PART NUMBER	QTY	BODY	MODEL	DESCRIPTION
49	5202 8180-1	1			SEAL, Radiator to Support Bracket
50	6031 321	4			RETAINER

MODEL CODES:

72=2 DR Wagon
74=4 DR Wagon
77=Open Body 93" Whlbase
78=Open Body 103" Whlbase - Export
T=2WD
J,N=4WD
U=4WD (RHD)

BODY STYLES:

YJ=Wrangler (4X4) "S"
Weangler (4X4) SE
Wrangler (4X4) Sahara
Wrangler (4X4) Renegade

XJ=Cherokee SE
Cherokee Sport
Cherokee Country

ZJ=Grand Cherokee SE
Grand Cherokee Laredo
Grand Cherolee Limited
ZG=Grand Cherokee European

Y1=Wrangler
X1=Cherokee
Z1=Grand Cherokee
KDX=Vehicles

AR = Use as Required - = Non Illustrated Part P.A.R. = Paint as Required

RADIATOR AND RELATED PARTS SIX CYLINDER ENGINE XJ BODY
Figure 7-130

7-130A

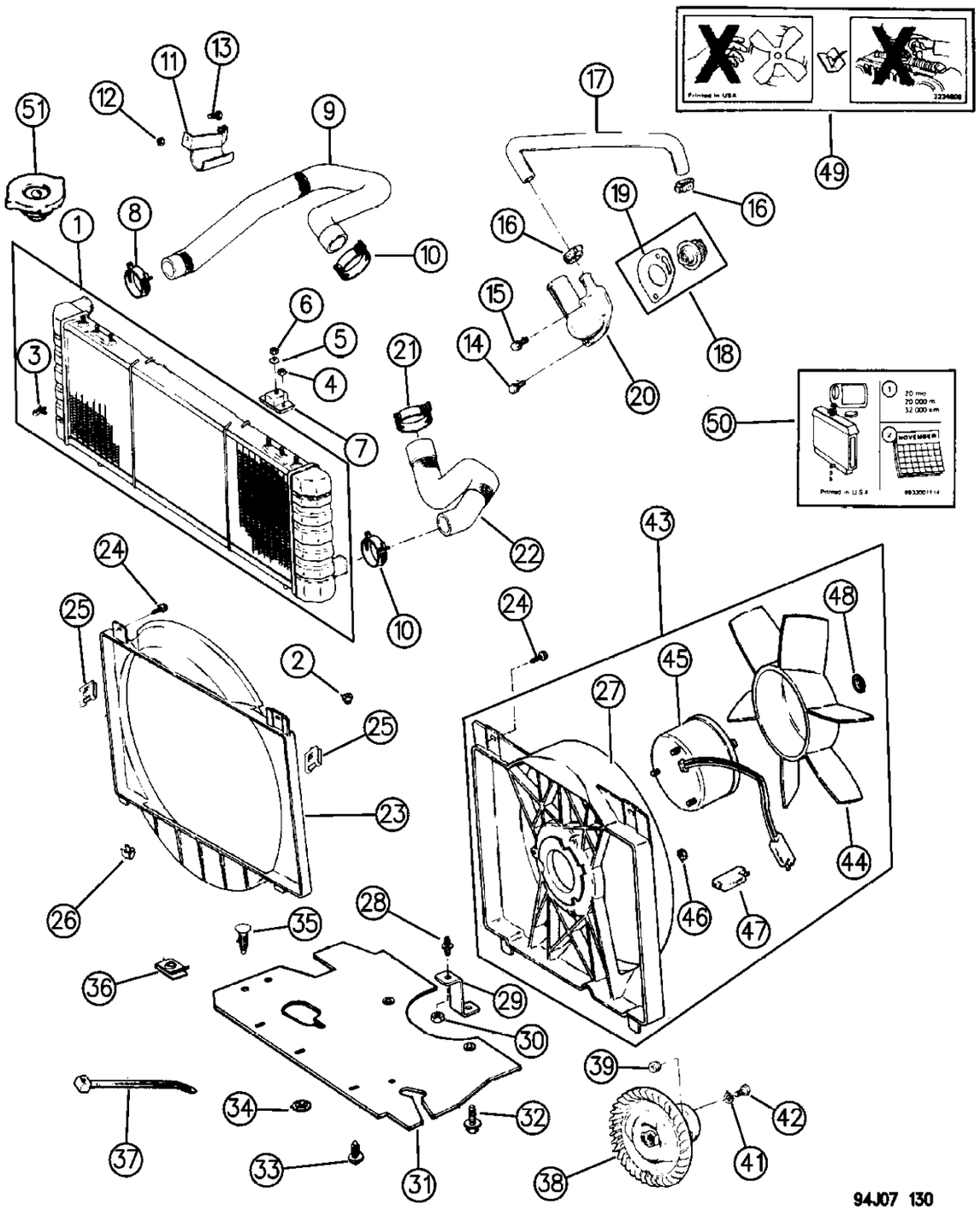

ITEM	PART NUMBER	QTY	BODY	MODEL	DESCRIPTION
1					RADIATOR
	5203 0000	1			Manual Trans, w/o Max. Cooling
	5202 8133	1			w/Max. Cooling
	5202 9045	1			Auto Trans., w/o Max. Cooling
	5202 8537	1			RHD Auto Trans., 1994
	5202 8393	1			RHD Auto Trans., 1995-96
	5202 8544	1			RHD Manual Trans., 1994
	5202 8394	1			RHD Manual Trans., 1995-96
2	J068 7550	2			GROMMET
3					DRAINCOCK
	J316 6547	1			Metal
	4546 100	1			Plastic
	4762 890	1			RHD
4	1150 2722	4			NUT
5	J400 1083	2			WASHER
6	1150 3745	2			NUT
7	5200 2585	2			INSULATOR
8	3200 2983	1			CLAMP
9					HOSE, Inlet
	5202 8025	1			w/Heater Only
	5202 8419	1			w/Air Cond.
	5202 8286	1	X1		RHD 1995-96, Severe Use
10	5200 5580	3			CLAMP
11	8350 5291	1			BRACKET
12	6500 502	1			NUT
13	1150 2628	1			BOLT
14	J400 6985	1			BOLT
15	J400 6951	1			BOLT, Thermostat Housing
16	J320 3076	2			CLAMP
17	5503 6106	1			HOSE, T/Stat to Water Valve
18	8350 1426	1			PACKAGE, Thermostat
	5202 8446	1			180 Degree, Severe Use
19	5300 6320	1			GASKET
20	5300 6192	1			HOUSING, Thermostat
21	3200 2366	1			CLAMP
22					HOSE, Outlet
	5200 6301	1			LHD
	5202 9635	1			RHD
	5602 2040	1	X1		RHD, Severe Use
	4882 098	1	X1		SENSOR, Hose
	5202 8158	1			BRACKET, Hose RHD

MODEL CODES:

72=2 DR Wagon
74=4 DR Wagon
77=Open Body 93" Whlbase
78=Open Body 103" Whlbase - Export
T=2WD
J,N=4WD
U=4WD (RHD)

BODY STYLES:

YJ=Wrangler (4X4) "S"
Weangler (4X4) SE
Wrangler (4X4) Sahara
Wrangler (4X4) Renegade
XJ=Cherokee SE
Cherokee Sport
Cherokee Country
ZJ=Grand Cherokee SE
Grand Cherokee Laredo
Grand Cherolee Limited
ZG=Grand Cherokee European
Y1=Wrangler
X1=Cherokee
Z1=Grand Cherokee
KDX=Vehicles

AR = Use as Required - = Non Illustrated Part P.A.R. = Paint as Required

RADIATOR AND RELATED PARTS SIX CYLINDER ENGINE XJ BODY
Figure 7-130

7-130A

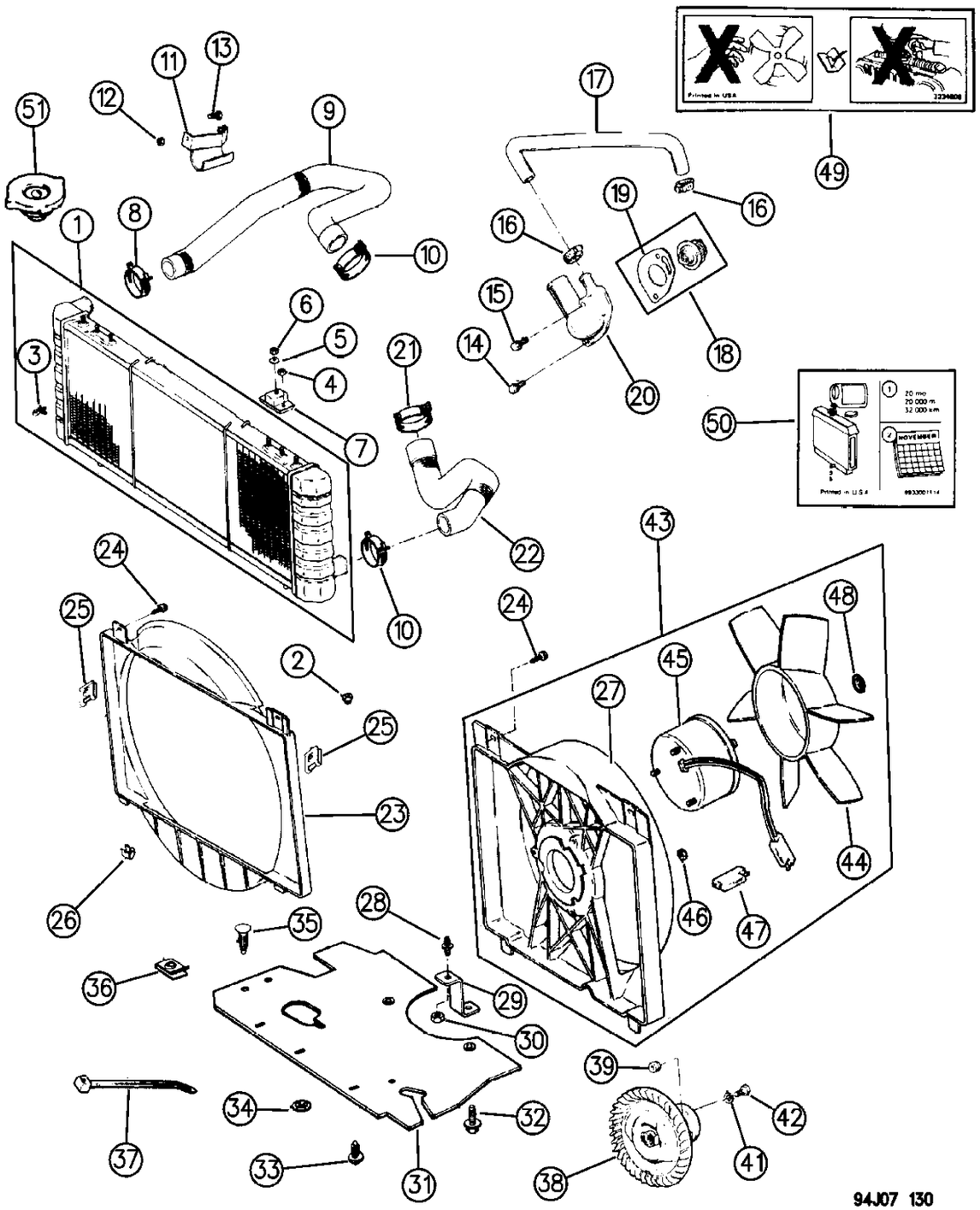

ITEM	PART NUMBER	QTY	BODY	MODEL	DESCRIPTION
	4762 678	1			BRACKET ASSEMBLY, Lower Rad. Hose Contains BRACKET
					52028158 w/STUD & WASHER, NUT RHD ***
23	5202 7501	1			SHROUD, Mechanical Fan
	5202 8324	1			RHD
24	3420 1195	2			SCREW
25	3420 2462	4			NUT, Radiator, Upper
26		4			CLIP (DNS)
27		1			SHROUD, Electric Fan (Serviced in Item #43)
28	3420 2347	1			STUD
29	5200 3837	1			BRACKET
30	8351 0135	1			NUT
31	5517 4736	1			SHIELD, Engine Splash
	J400 5899	2			RIVET
32	3420 1540	2			SCREW
33	J400 4919	3			FASTENER
34	J400 0271	3			NUT, Push
	3420 2014	2			SCREW
35	3420 2787	2			FASTENER
36	1150 0662	AR			NUT
37	J322 3227	1			STRAP
38	5202 8327	1			DRIVE, Fan
39	J027 1184	4			NUT
41	J012 0214	4			WASHER
42	6034 860	4			BOLT
43					MODULE, Fan
	5200 5748	1			1994, With R134, With 8 Blades
	5207 9444	1			1995-96
	5207 9445	1			RHD
	5202 9130	1			MID EAST
44	5200 2593	1			FAN, Mechanical (Electric Serviced in #43)
45		1			MOTOR, Fan (Serviced in Item 43)
46	8350 3415	3			NUT
47	8350 3583	3			CONNECTOR
48	8350 3417	1			RETAINER, Fan
49	J323 4806	1			LABEL, Fan
50	3300 1114	1			LABEL, Radiator
51	3781 830	1			CAP, Radiator

MODEL CODES:

72=2 DR Wagon | 77=Open Body 93" Whlbase | T=2WD | U=4WD (RHD)
74=4 DR Wagon | 78=Open Body 103" Whlbase - Export | J,N=4WD

BODY STYLES:

YJ=Wrangler (4X4) "S"	XJ=Cherokee SE	ZJ=Grand Cherokee SE	Y1=Wrangler
Weangler (4X4) SE	Cherokee Sport	Grand Cherokee Laredo	X1=Cherokee
Wrangler (4X4) Sahara	Cherokee Country	Grand Cherolee Limited	Z1=Grand Cherokee
Wrangler (4X4) Renegade		ZG=Grand Cherokee European	KDX=Vehicles

AR = Use as Required - = Non Illustrated Part P.A.R. = Paint as Required

RADIATOR AND RELATED PARTS 2.1 DIESEL ENGINE XJ BODY
Figure 7-140

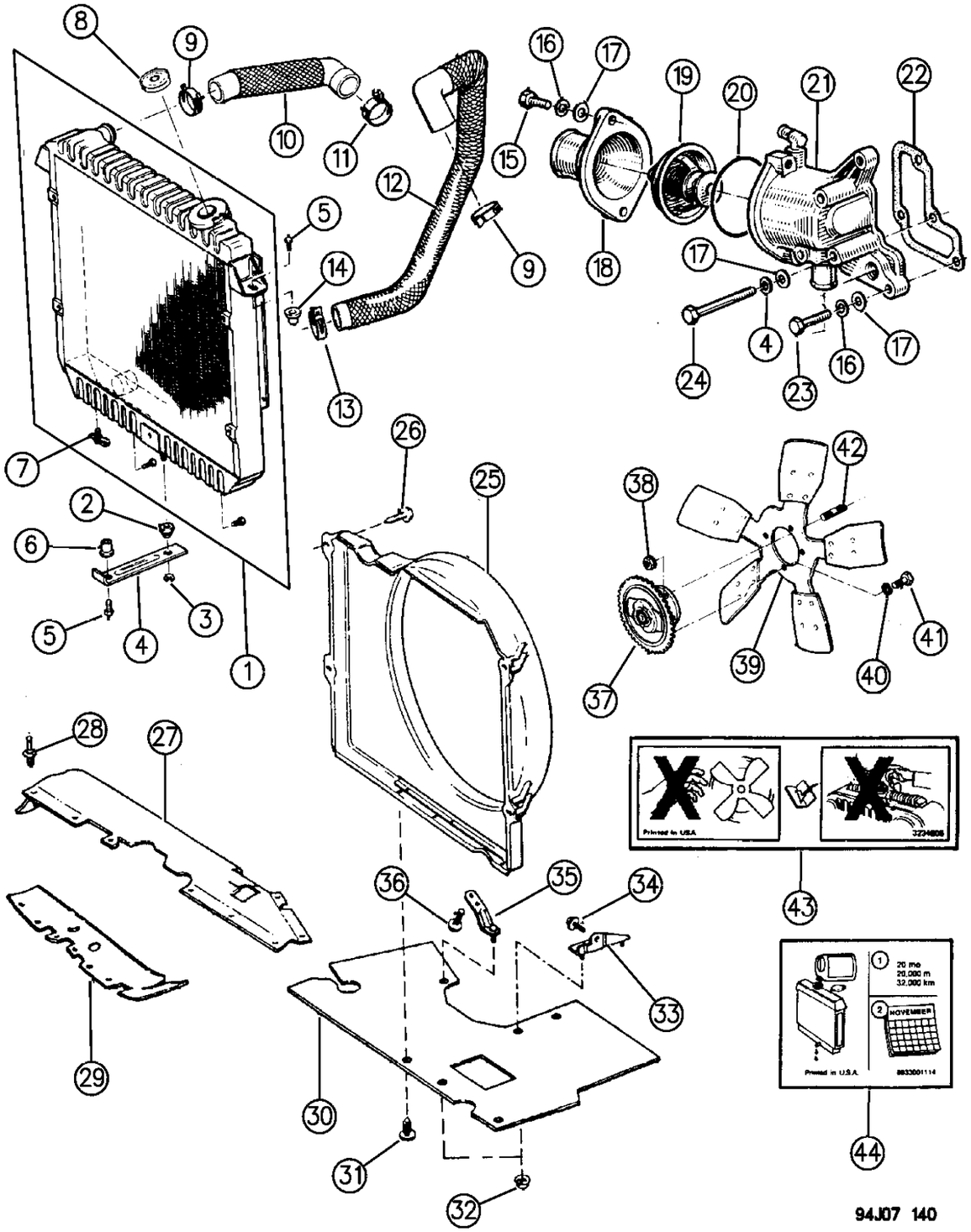

ITEM	PART NUMBER	QTY	BODY	MODEL	DESCRIPTION
1	5202 8117	1			RADIATOR
2	5300 0511	1			GROMMET
3	3420 1494	1			RING, Retaining
4	5300 0510	1			BRACE, Radiatior
5	1150 2628	3			BOLT
6	3420 1493	1			NUT
7	J316 6547	1			DRAINCOCK
8	J536 4692	1			CAP, Radiator
9	3200 2983	2			CLAMP
10	5200 3949	1			HOSE, Inlet
11	3200 2371	1			CLAMP
12	5200 3948	1			HOSE, Outlet
13	5200 5580	1			CLAMP
14	3420 1348	2			NUT
15	T300 1634	2			BOLT
16	T140 2092	14			WASHER, Lock
17	T140 2065	14			WASHER, Flat
18	T065 6732	1			OUTLET, Thermostat
19	T069 7157	1			THERMOSTAT, Engine Coolant
20	J550 5980	1			GASKET
21	T072 7361	1			HOUSING, Thermostat
22	T134 8932	1			GASKET
23	T300 1614	1			BOLT
24	T300 1238	3			BOLT
25	5300 1177	1			SHROUD, Fan
26	J318 9013	4			SCREW
27	5202 7729	1			SEAL
28	3420 1621	14			RIVET
29	5500 3057	1			SEAL
30	5517 4736	1			SHIELD, Engine Splash
31	J400 4919	3			NUT
32	J400 6220	3			NUT
33	5301 0056	1			BRACKET, Splash Shield - Left
34	3420 1540	2			BOLT
35	5300 2544	1			BRACKET, Splash Shield - Right
36	3420 1912	2			SCREW
37	5300 1168	1			DRIVE, Fan
38	3420 1658	4			NUT, Lock
39	5300 1168	1			FAN, Cooling
	5300 1706	1			Five Blade
40	J012 0214	4			WASHER, Lock
41	6034 860	4			BOLT

MODEL CODES:

72=2 DR Wagon
74=4 DR Wagon
77=Open Body 93" Whlbase
78=Open Body 103" Whlbase - Export
T=2WD
J,N=4WD
U=4WD (RHD)

BODY STYLES:

YJ=Wrangler (4X4) "S"
Weangler (4X4) SE
Wrangler (4X4) Sahara
Wrangler (4X4) Renegade
XJ=Cherokee SE
Cherokee Sport
Cherokee Country
ZJ=Grand Cherokee SE
Grand Cherokee Laredo
Grand Cherolee Limited
ZG=Grand Cherokee European
Y1=Wrangler
X1=Cherokee
Z1=Grand Cherokee
KDX=Vehicles

AR = Use as Required - = Non Illustrated Part P.A.R. = Paint as Required

RADIATOR AND RELATED PARTS 2.1 DIESEL ENGINE XJ BODY
Figure 7-140

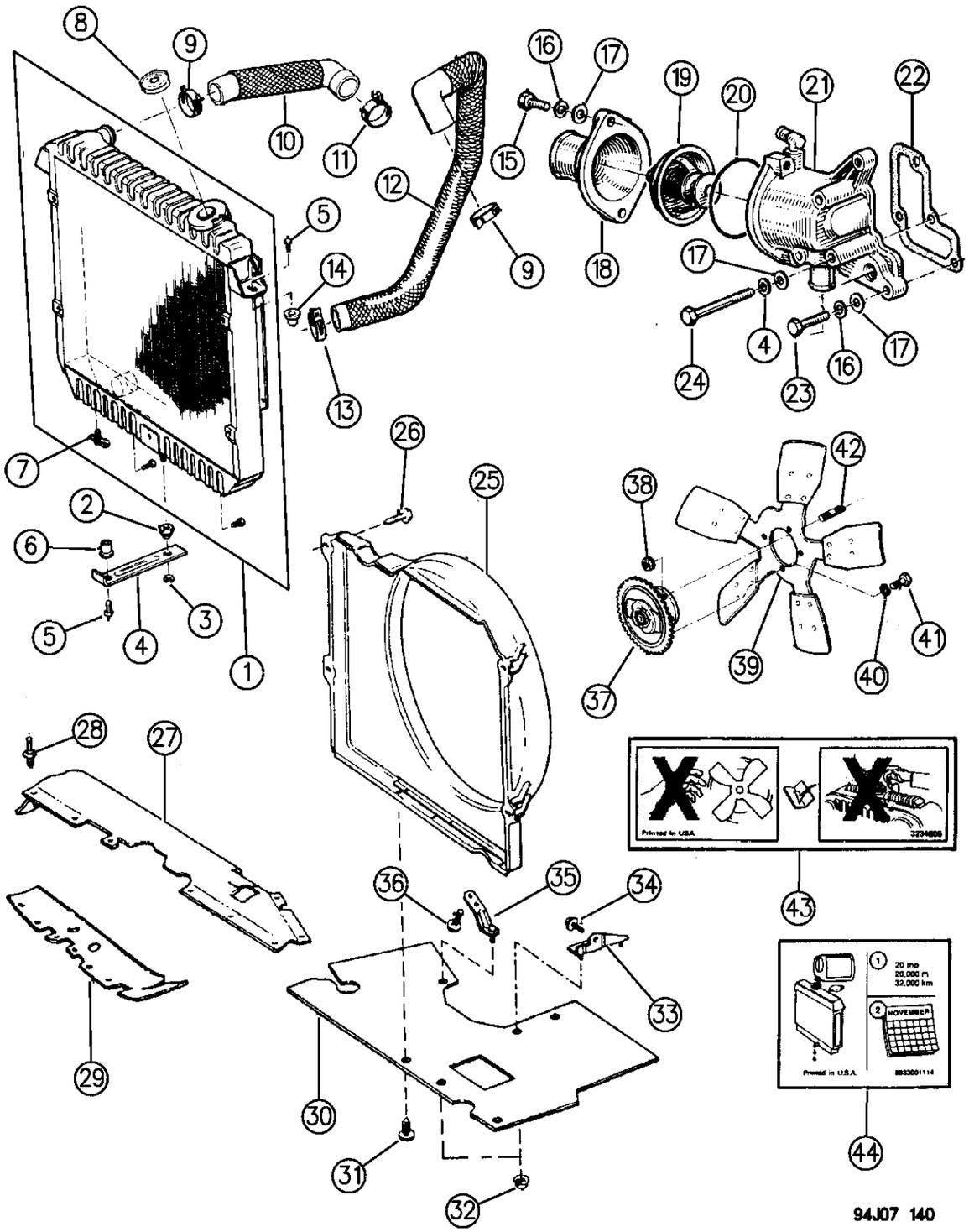

ITEM	PART NUMBER	QTY	BODY	MODEL	DESCRIPTION
42	3420 2197	4			STUD
43	J323 4806	1			LABEL, Fan
44	3300 1114	1			LABEL, Radiator

MODEL CODES:

72=2 DR Wagon	77=Open Body 93" Whlbase	T=2WD	U=4WD (RHD)
74=4 DR Wagon	78=Open Body 103" Whlbase - Export	J,N=4WD	

BODY STYLES:

YJ=Wrangler (4X4) "S"	XJ=Cherokee SE	ZJ=Grand Cherokee SE	Y1=Wrangler
Weangler (4X4) SE	Cherokee Sport	Grand Cherokee Laredo	X1=Cherokee
Wrangler (4X4) Sahara	Cherokee Country	Grand Cherolee Limited	Z1=Grand Cherokee
Wrangler (4X4) Renegade		ZG=Grand Cherokee European	KDX=Vehicles

AR = Use as Required - = Non Illustrated Part P.A.R. = Paint as Required

RADIATOR AND RELATED PARTS 2.5 DIESEL ENGINE XJ BODY
Figure 7-145

7-145D

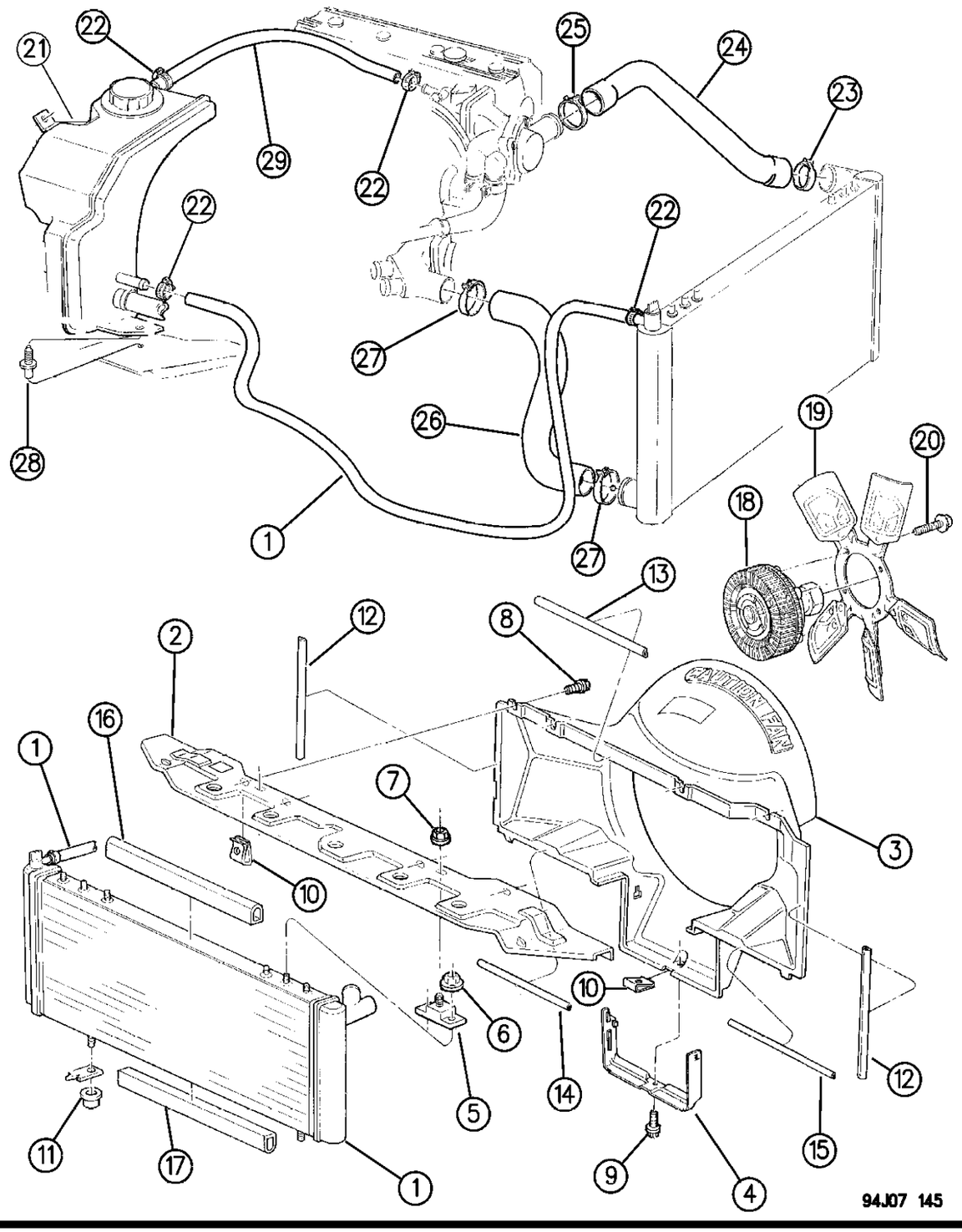

ITEM	PART NUMBER	QTY	BODY	MODEL	DESCRIPTION
1					RADIATOR
	5202 9100	1			w/o Max, Cooling
	4874 198	1			w/Max, Cooling
	5202 8256	1			CAP, Radiator
2	5534 5545	1			CROSSMEMBER, Upper Radiator
3	5202 8406	1			SHROUD, Radiator
4	5202 8239	1			SEAL, Lower Shroud
5	5200 2585	2			INSULATOR, Upper Radiator Mtg.
6	1150 2722	4			NUT
7	1150 3745	2			NUT
8		4			SCREW (DNS)
9		1			SCREW (DNS)
10	6101 711	5			U-NUT
11	J068 7550	2			GROMMET
12	5202 8230	2			SEAL, Radiator to Shroud, Side
13	5202 8234	1			SEAL, Radiator to Shroud, Upper
14	5202 8223	1			SEAL, Radiator to Shroud, Lower Right
15	5202 8216	1			SEAL, Radiator to Shroud, Lower Left
16	5202 8238	1			SEAL, Radiator to Crossmember, Upper
17	5202 8237	1			SEAL, Radiator to Crossmember, Lower
18	5202 8370	1			FAN, Viscous Drive
19	5202 8200	1			FAN, Cooling
20	6034 860	4			SCREW, Fan
21	5202 8090	1			BOTTLE, Degasser ***
	5202 8256	1			CAP, Bottle
22	6502 081	2			CLAMP
23	5200 5580	2			CLAMP
24	5202 8308	1			HOSE, Radiator Inlet
25	3200 2983	1			CLAMP
26	5202 8407	1			HOSE, Radiator Outlet
27	5200 5580	1			CLAMP
28	6032 824	2			SCREW
29					HOSE
	5202 8430	1			Bottle to Cylinder Head
	5202 8092	1			Bottle Outlet to Water Pump

MODEL CODES:

72=2 DR Wagon
74=4 DR Wagon
77=Open Body 93" Whlbase
78=Open Body 103" Whlbase - Export
T=2WD
J,N=4WD
U=4WD (RHD)

BODY STYLES:

YJ=Wrangler (4X4) "S"
Weangler (4X4) SE
Wrangler (4X4) Sahara
Wrangler (4X4) Renegade
XJ=Cherokee SE
Cherokee Sport
Cherokee Country
ZJ=Grand Cherokee SE
Grand Cherokee Laredo
Grand Cherolee Limited
ZG=Grand Cherokee European
Y1=Wrangler
X1=Cherokee
Z1=Grand Cherokee
KDX=Vehicles

AR = Use as Required - = Non Illustrated Part P.A.R. = Paint as Required

« RETURN TO GROUP INDEX

CHARGE AIR COOLER 2.5L DIESEL ENGINE XJ BODY
Figure 7-147

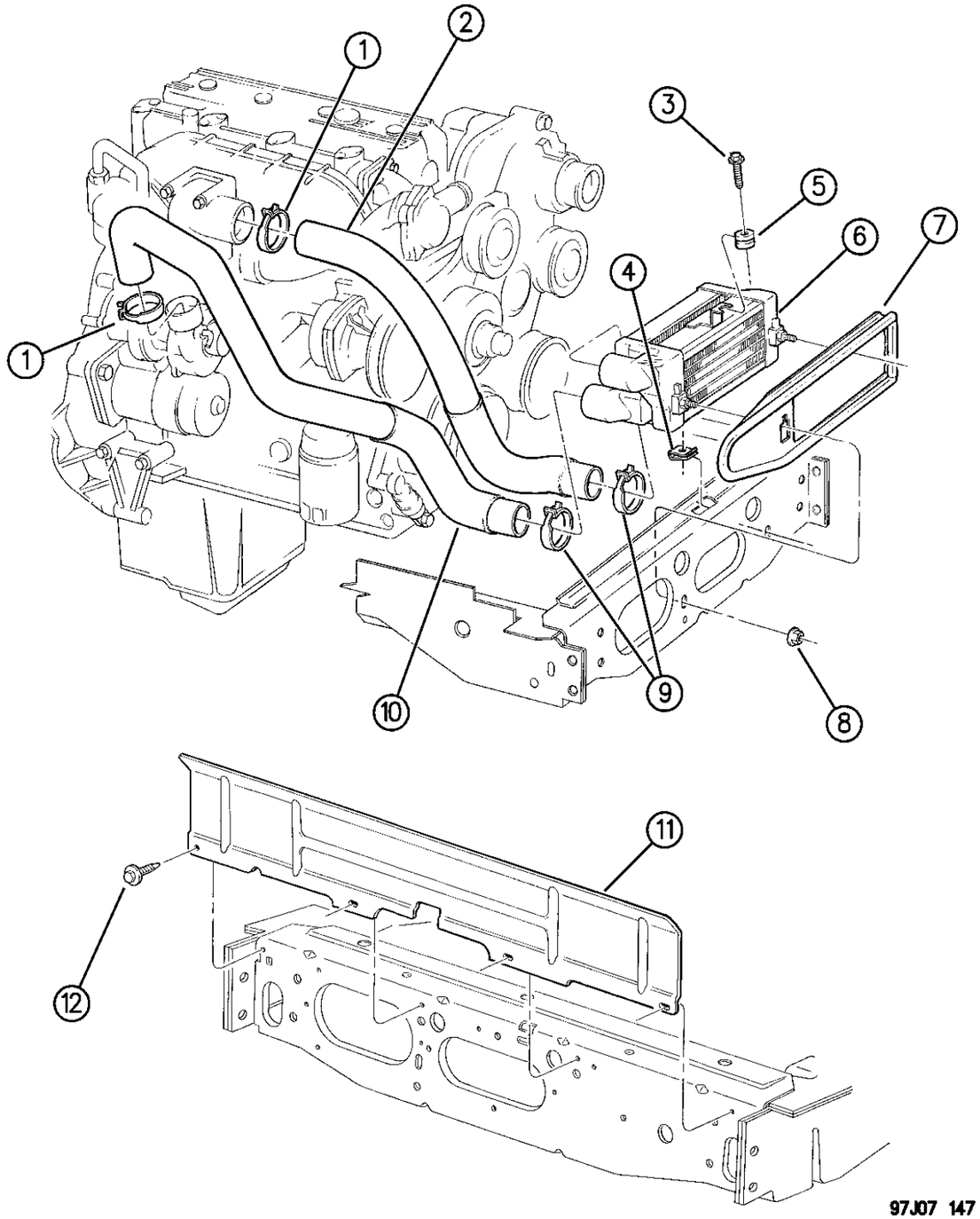

ITEM	PART NUMBER	QTY	BODY	MODEL	DESCRIPTION
1		2			CLAMP (DNS)
2	5207 9496	1			HOSE, Outlet
3		1			SCREW (DNS)
4	6101 442	1			U-NUT
5	5202 8236	1			ISOLATOR
6	5202 8089	1			COOLER, Charge Air
7	5202 8235	1			SEAL
8	6501 859	2			NUT
9	5202 8008	2			CLAMP
10					HOSE, Inlet
	5207 9497	1			1996
	5207 9581	1			1997
11	5202 8374	1			DEFLECTOR, Air ***
12		4			SCREW (DNS)

MODEL CODES:

72=2 DR Wagon
74=4 DR Wagon
77=Open Body 93" Whlbase
78=Open Body 103" Whlbase - Export
T=2WD
J,N=4WD
U=4WD (RHD)

BODY STYLES:

YJ=Wrangler (4X4) "S"
Weangler (4X4) SE
Wrangler (4X4) Sahara
Wrangler (4X4) Renegade
XJ=Cherokee SE
Cherokee Sport
Cherokee Country
ZJ=Grand Cherokee SE
Grand Cherokee Laredo
Grand Cherolee Limited
ZG=Grand Cherokee European
Y1=Wrangler
X1=Cherokee
Z1=Grand Cherokee
KDX=Vehicles

AR = Use as Required - = Non Illustrated Part P.A.R. = Paint as Required

« RETURN TO GROUP INDEX

RADIATOR AND RELATED PARTS SIX CYLINDER ENGINE ZJ, ZG BODY
Figure 7-150

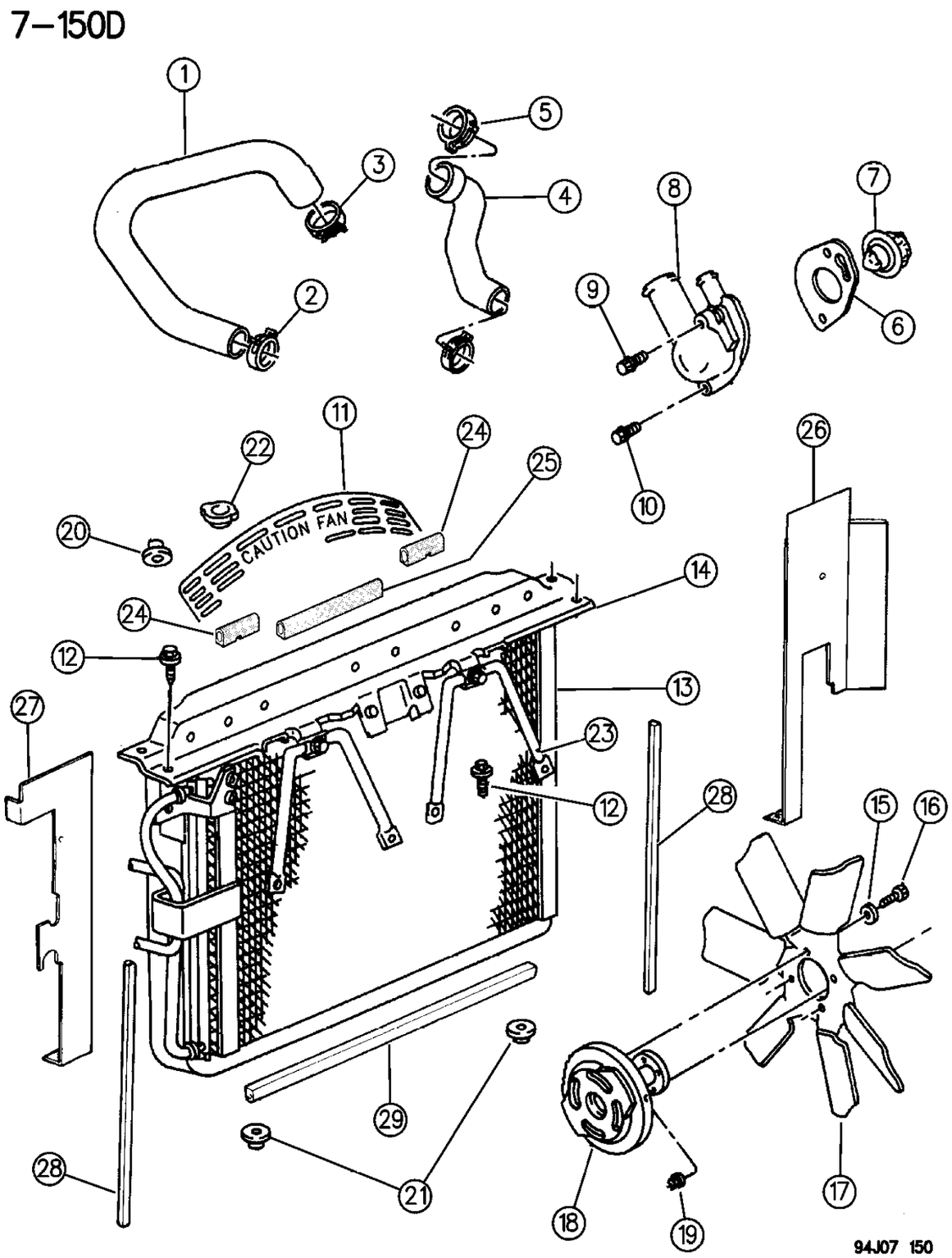

ITEM	PART NUMBER	QTY	BODY	MODEL	DESCRIPTION
1	5202 8263	1			HOSE, Radiator Inlet
	5202 7776	1			SLEEVE, Protector
2	3200 2983	1			CLAMP
3	3200 2255	2			CLAMP
4					HOSE, Outlet
	5200 5178	1			LHD
	5305 4354	1			RHD
	5202 7776	1			SLEEVE, Protector
5	3200 2366	1			CLAMP
6	5302 0547	1			GASKET, Thermostat
7					THERMOSTAT
	8350 1426	1			1994-95
	5202 8186	1			1996
8	5300 6192	1			HOUSING, Thermostat
9	J400 6951	1			BOLT
10		1			BOLT (DNS)
11					SHROUD
	5202 7976	1			1994
	5207 9583	1			1995-96
	5202 7978	2			BRACKET, Radiator to Shroud
	6501 859	2			NUT, Bracket to Shroud
12	6100 568	4			SCREW
13					RADIATOR
					Auto. Trans.
	5202 7798	1			1994, Stamped 4734103
	5202 8379	1			1995-96
					Manual Trans.
	5202 7797	1			1994
	5202 8378	1			1995-96
					DRAINCOCK
	4773 259	1			1994
	4546 100	1			1995-96
	4644 750	2			GASKET, Radiator
	4734 179	2			O-RING, Radiator
14	5525 4771	1			CROSSMEMBER, Radiator, Upper
15	5200 6642	2			ISOLATOR, Upper
16	6034 860	4			SCREW
17	5200 5164	1			FAN
	4762 274	1			MIDEAST
	5202 8395	1			BRACKET, Fan Mtg. MIDEAST
	4762 276	4			U-NUT, Fan Mtg. MIDEAST
	6100 288	1			BOLT, Fan Mtg. Lower MIDEAST

MODEL CODES:

72=2 DR Wagon
74=4 DR Wagon
77=Open Body 93" Whlbase
78=Open Body 103" Whlbase - Export
T=2WD
J,N=4WD
U=4WD (RHD)

BODY STYLES:

YJ=Wrangler (4X4) "S"
Weangler (4X4) SE
Wrangler (4X4) Sahara
Wrangler (4X4) Renegade
XJ=Cherokee SE
Cherokee Sport
Cherokee Country
ZJ=Grand Cherokee SE
Grand Cherokee Laredo
Grand Cherolee Limited
ZG=Grand Cherokee European
Y1=Wrangler
X1=Cherokee
Z1=Grand Cherokee
KDX=Vehicles

AR = Use as Required - = Non Illustrated Part P.A.R. = Paint as Required

RADIATOR AND RELATED PARTS SIX CYLINDER ENGINE ZJ, ZG BODY
Figure 7-150

7-150D

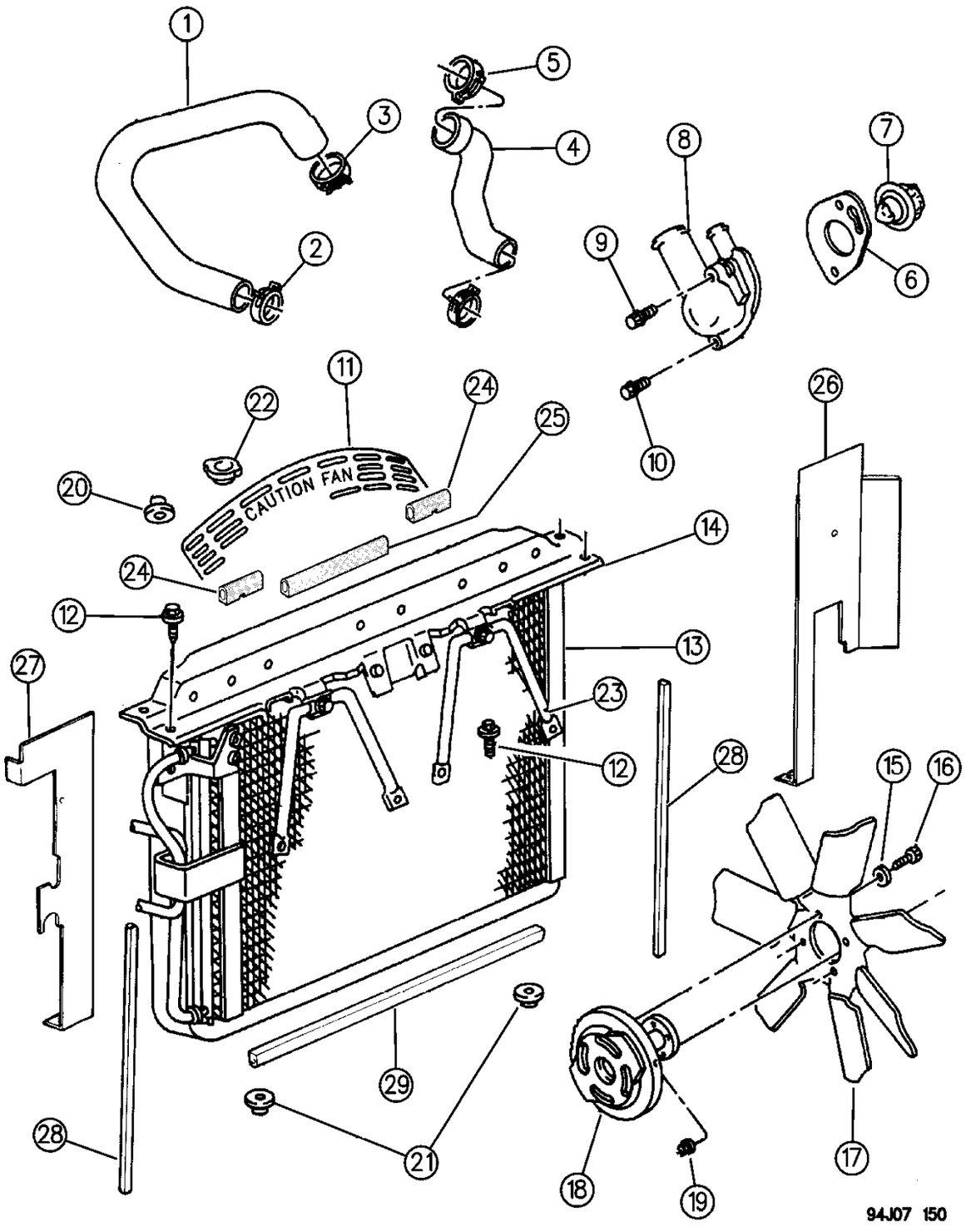

ITEM	PART NUMBER	QTY	BODY	MODEL	DESCRIPTION
	6500 517	4			BOLT, Fan Mtg. MIDEAST
18	5202 7824	1			CLUTCH, Fan, Viscous Cooling
	5202 7823	1			w/Max Cooling
19	J027 1184	1			NUT
20	5200 6642	2			ISOLATOR, Upper
	6100 515	4			NUT, Upper Isolator to Radiator
21	J068 7550	2			GROMMET, Lower Isolator
22	3781 830	1			CAP, Radiator
23	5525 4509	2			BRACE, Radiator Crossmember
	5300 6398	1			LABEL, Belt Routing
	5300 6398	1			1994-95
	5301 0298	1			1996
24	5202 7811	2			SEAL, Upper Crossmember
25	5202 7507	1			SEAL, Crossmember Center
26	5200 6160	1			SEAL, Radiator Side, Right
27	5200 6159	1			SEAL, Radiator Side, Left
28	5202 7509	2			SEAL, Radiator to Condenser
	5202 7741	1			MIDEAST
29	5202 7506	1			SEAL, Lower Crossmember
	5202 7740	1			SEAL, Radiator to Shroud

MODEL CODES:

72=2 DR Wagon
74=4 DR Wagon
77=Open Body 93" Whlbase
78=Open Body 103" Whlbase - Export
T=2WD
J,N=4WD
U=4WD (RHD)

BODY STYLES:

YJ=Wrangler (4X4) "S"
Weangler (4X4) SE
Wrangler (4X4) Sahara
Wrangler (4X4) Renegade
XJ=Cherokee SE
Cherokee Sport
Cherokee Country
ZJ=Grand Cherokee SE
Grand Cherokee Laredo
Grand Cherolee Limited
ZG=Grand Cherokee European
Y1=Wrangler
X1=Cherokee
Z1=Grand Cherokee
KDX=Vehicles

AR = Use as Required - = Non Illustrated Part P.A.R. = Paint as Required

RADIATOR AND RELATED PARTS EIGHT CYLINDER ENGINE ZJ, ZG BODY
Figure 7-160

7-160B

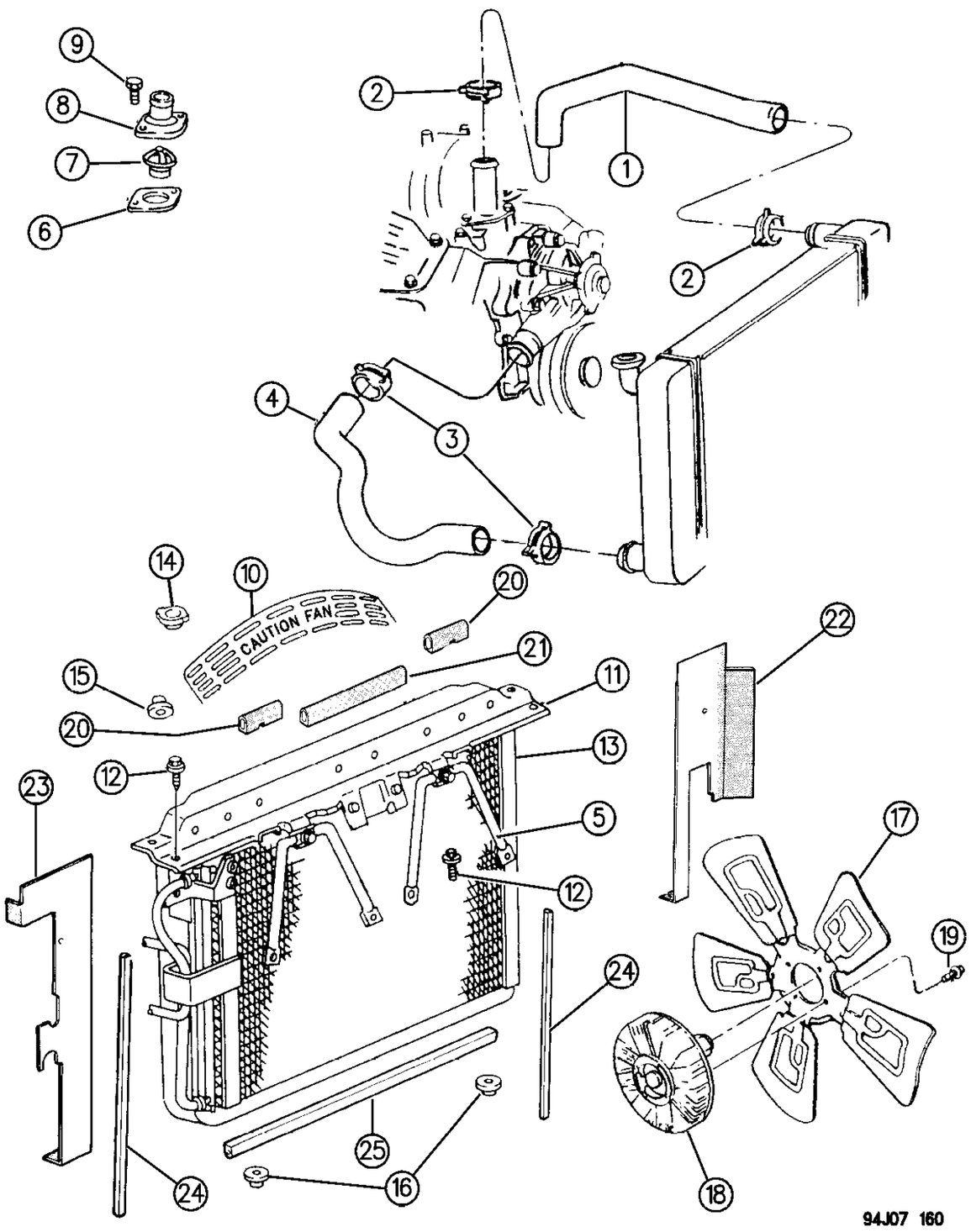

ITEM	PART NUMBER	QTY	BODY	MODEL	DESCRIPTION
1	5202 9272	1			HOSE, Radiator Inlet
2	2448 763	2			CLAMP
3	3200 2366	2			CLAMP
4	5202 8226	1			HOSE, Outlet
5	5525 4509	2			BRACE, Radiator Crossmember
6	5302 0371	1			GASKET, Thermostat
7					THERMOSTAT
	5202 8185	1			1994-95, 5.2L Engine
	5202 8185	1			1996
8	5302 0115	1			HOUSING, Thermostat
	6034 549	2			SCREW, Pilot Point Thermostat Housing Att.
9	6034 343	2			SCREW
10	5202 8033	1			SHROUD, Radiator
	5202 8035	1			DOOR, Fan Shroud
-	6503 221	1			PIN,Door
					SEAL, Shroud Door
	5202 8046-7	1			Side
	5202 8048	1			Bottom
-	5200 6642	2			ISOLATOR
11	5525 4771	1			CROSSMEMBER, Radiator, Upper
	5202 7978	2			BRACKET, Radiator to Shroud
	6501 859	2			NUT, Bracket to Shroud
12	6100 568	4			SCREW
13					RADIATOR
	5202 8098	1			1994
	4734 104	1			1995-96
	4644 269	1			DRAINCOCK
	4644 750	2			GASKET, Radiator
-	J068 7550	1			GROMMET
14	5202 7793	1			CAP, Radiator
	6100 840	2			PUSH-NUT, Support Assembly ***
15	J012 0214	1			WASHER
16	6034 860	4			BOLT, Fan Mounting to Drive
17	5202 7888	1			FAN ASSEMBLY ***
18					CLUTCH, Fan, Viscous Cooling
	5202 8215	1			w/o Max. Cooling
	5202 8214	1			w/Max Cooling
19	6022 225	6			SCREW
	5300 8745	1			LABEL, Belt Routing
20	5202 7718	2			SEAL, Upper Crossmember
21	5202 7507	1			SEAL, Upper Center
22	5200 6160	1			SEAL, Radiator Side, Right

MODEL CODES:

72=2 DR Wagon
74=4 DR Wagon
77=Open Body 93" Whlbase
78=Open Body 103" Whlbase - Export
T=2WD
J,N=4WD
U=4WD (RHD)

BODY STYLES:

YJ=Wrangler (4X4) "S"
Weangler (4X4) SE
Wrangler (4X4) Sahara
Wrangler (4X4) Renegade
XJ=Cherokee SE
Cherokee Sport
Cherokee Country
ZJ=Grand Cherokee SE
Grand Cherokee Laredo
Grand Cherolee Limited
ZG=Grand Cherokee European
Y1=Wrangler
X1=Cherokee
Z1=Grand Cherokee
KDX=Vehicles

AR = Use as Required - = Non Illustrated Part P.A.R. = Paint as Required

RADIATOR AND RELATED PARTS EIGHT CYLINDER ENGINE ZJ, ZG BODY
Figure 7-160

7-160B

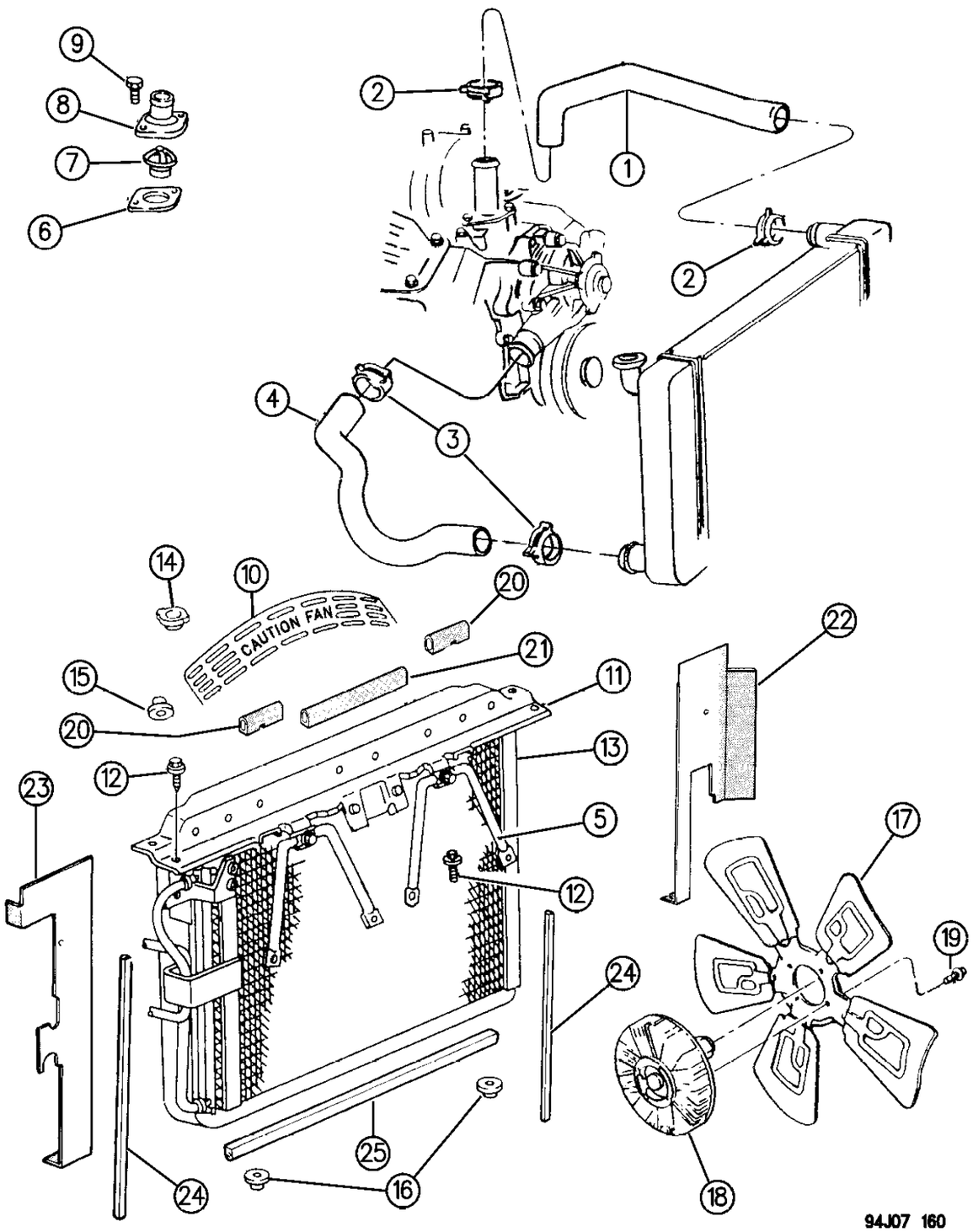

ITEM	PART NUMBER	QTY	BODY	MODEL	DESCRIPTION
23	5200 6159	1			SEAL, Radiator Side, Left
24	5202 7509	2			SEAL, Radiator to Condenser
25	5202 7506	1			SEAL, Lower Crossmember
	5202 7740	1			SEAL, Radiator to Shroud

MODEL CODES:

72=2 DR Wagon
74=4 DR Wagon
77=Open Body 93" Whlbase
78=Open Body 103" Whlbase - Export
T=2WD
J,N=4WD
U=4WD (RHD)

BODY STYLES:

YJ=Wrangler (4X4) "S"
Weangler (4X4) SE
Wrangler (4X4) Sahara
Wrangler (4X4) Renegade
XJ=Cherokee SE
Cherokee Sport
Cherokee Country
ZJ=Grand Cherokee SE
Grand Cherokee Laredo
Grand Cherolee Limited
ZG=Grand Cherokee European
Y1=Wrangler
X1=Cherokee
Z1=Grand Cherokee
KDX=Vehicles

AR = Use as Required - = Non Illustrated Part P.A.R. = Paint as Required

RADIATOR AND RELATED PARTS 2.5 DIESEL ENGINE ZG BODY
Figure 7-165

7-165B

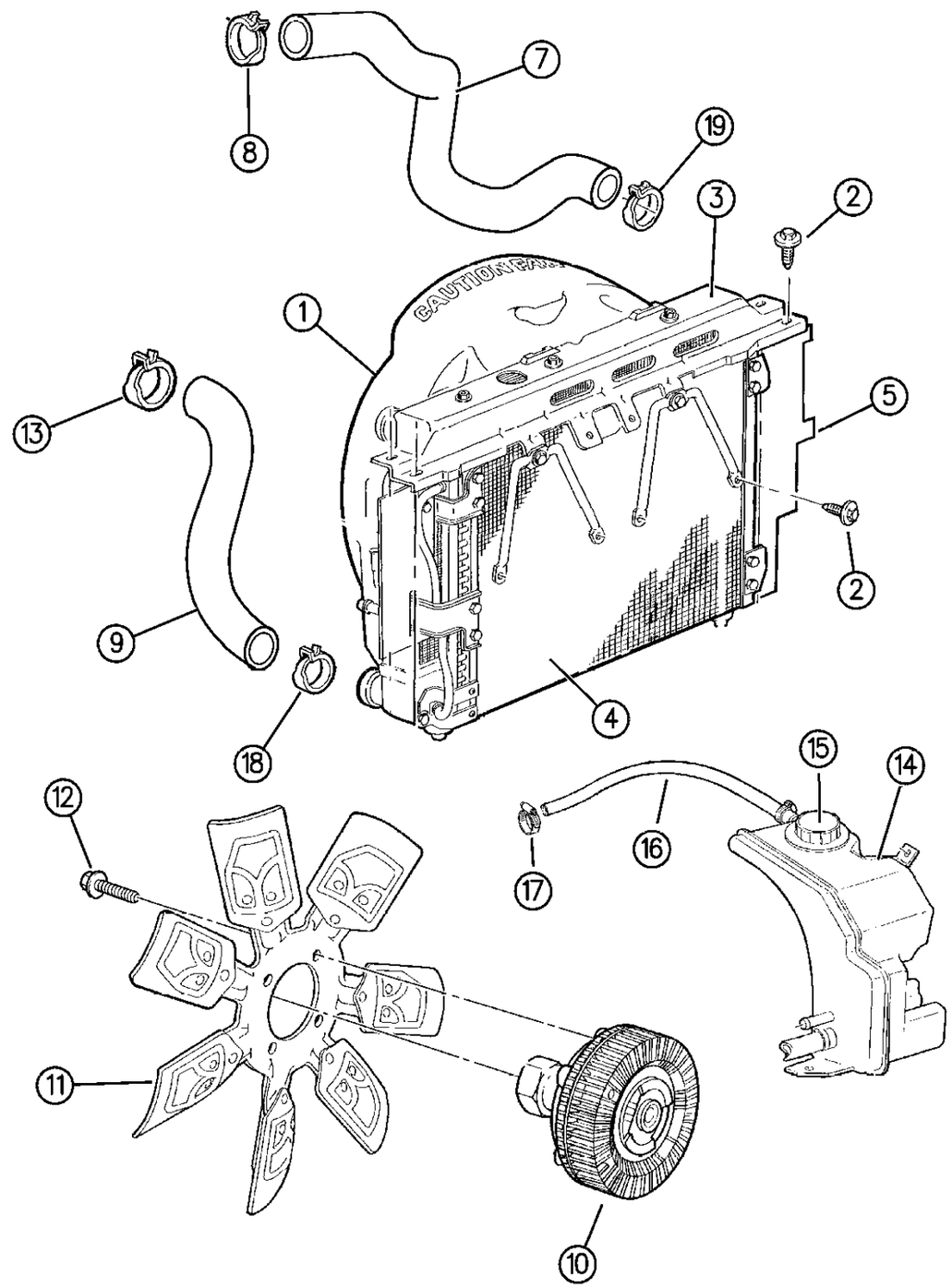

94J07 165

ITEM	PART NUMBER	QTY	BODY	MODEL	DESCRIPTION
1	5202 7745	1			SHROUD, Fan
	5305 4194	1			RHD
	5202 8399	1			LABEL, Coolant
2	6100 568	AR			SCREW
3	5525 4807	1			CROSSMEMBER, Upper Radiator
	5525 4509	1			BRACE, Crossmember
4	5202 7746	1			RADIATOR
					ISOLATOR, Radiator
	5200 6642	3			Upper
	5202 7828	2			Lower
5					SEAL, Radiator
	5202 8155	1			Intercooler to Body
	5202 8154	1			Left Side to Body
	5202 8156	1			Upper Crossmember to Radiator
	5202 8058	1			Lower to Crossmember
	5207 9458	1		RHD	Radiator to Condensor
	5305 4436	1		RHD	Radiator Left Side to Body
7	5202 7779	1			HOSE, Inlet
	5305 4393	1			RHD
8	5200 5580	2			CLAMP, Hose
9	5202 8069	1			HOSE, Outlet
10	5202 7922	1			DRIVE, Fan
11	5202 8541	1			FAN
12	6034 860	4			SCREW
13	5200 5580	1			CLAMP, Hose
14	5207 9518	1			BOTTLE, Degasser ***
	5305 4106	1			RHD
15	5200 6926	1			CAP, Bottle
16					HOSE, Bottle
	5202 8153	1			Overflow
	5202 7957	1			Bottle Outlet to Water Pump
	5202 7959	1			Bottle Outlet to Cylinder Head
	5305 4453	1			RHD
	5305 4190	1			Radiator to Bottle Vent, RHD
	5305 4191	1			ECR Bottle Outlet to W/Pump, RHD
	5305 4476	1			Upper Coolant Return, RHD
17	6502 018	AR			CLAMP, Hose
18	5200 5580	1			CLAMP, Hose
19	3200 2983	1			CLAMP, Hose

MODEL CODES:

72=2 DR Wagon
74=4 DR Wagon
77=Open Body 93" Whlbase
78=Open Body 103" Whlbase - Export
T=2WD
J,N=4WD
U=4WD (RHD)

BODY STYLES:

YJ=Wrangler (4X4) "S"
Weangler (4X4) SE
Wrangler (4X4) Sahara
Wrangler (4X4) Renegade
XJ=Cherokee SE
Cherokee Sport
Cherokee Country
ZJ=Grand Cherokee SE
Grand Cherokee Laredo
Grand Cherolee Limited
ZG=Grand Cherokee European
Y1=Wrangler
X1=Cherokee
Z1=Grand Cherokee
KDX=Vehicles

AR = Use as Required - = Non Illustrated Part P.A.R. = Paint as Required

« RETURN TO GROUP INDEX

INTERCOOLER, RADIATOR 2.5L DIESEL ENGINE ZG BODY
Figure 7-170

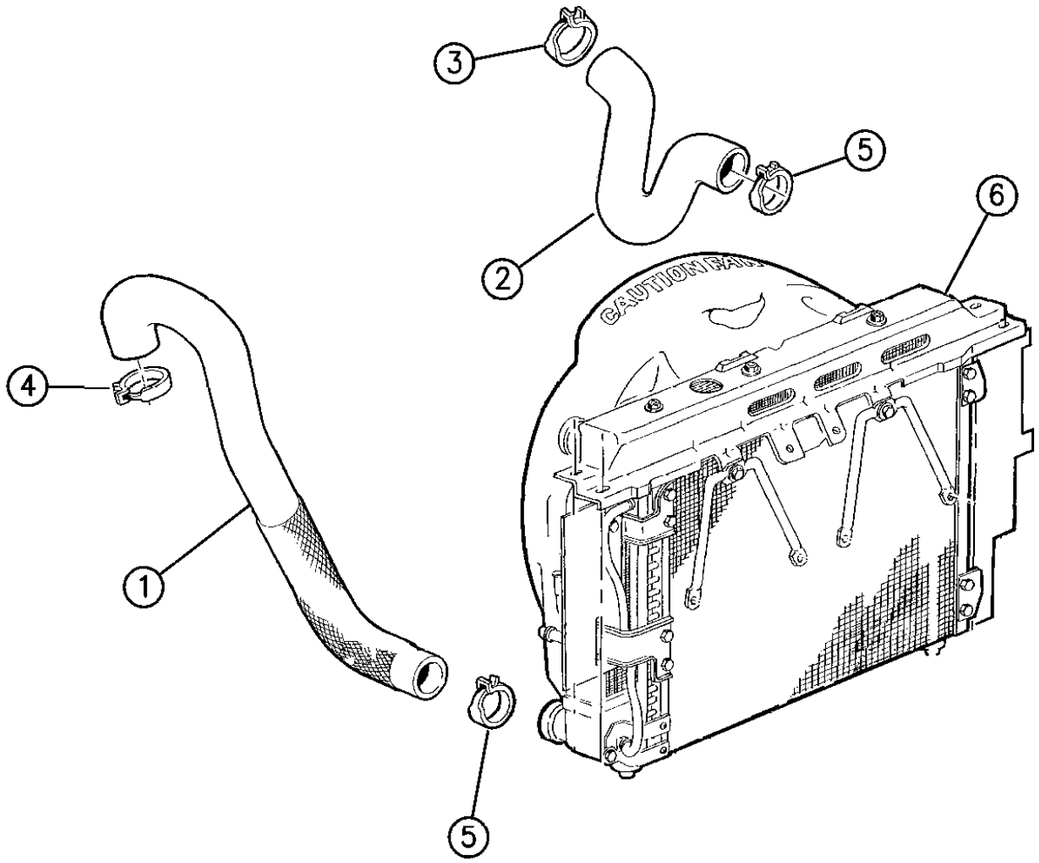

94J07 170

ITEM	PART NUMBER	QTY	BODY	MODEL	DESCRIPTION
1	5202 7750	1			HOSE, Inlet
2	5202 7749	1			HOSE, Outlet
3	5200 6750	1			CLAMP, Hose
4		1			CLAMP, Hose (DNS)
5	5202 8008	2			CLAMP, Hose
6	5207 9477	1			INTERCOOLER
	5305 4195	1			RHD
	5305 4433	1			SEAL, Intercooler to Body, RHD

MODEL CODES:

72=2 DR Wagon
74=4 DR Wagon
77=Open Body 93" Whlbase
78=Open Body 103" Whlbase - Export
T=2WD
J,N=4WD
U=4WD (RHD)

BODY STYLES:

YJ=Wrangler (4X4) "S"
Weangler (4X4) SE
Wrangler (4X4) Sahara
Wrangler (4X4) Renegade

XJ=Cherokee SE
Cherokee Sport
Cherokee Country

ZJ=Grand Cherokee SE
Grand Cherokee Laredo
Grand Cherolee Limited
ZG=Grand Cherokee European

Y1=Wrangler
X1=Cherokee
Z1=Grand Cherokee
KDX=Vehicles

AR = Use as Required - = Non Illustrated Part P.A.R. = Paint as Required

WATER PUMP YJ BODY
Figure 7-205

7–205

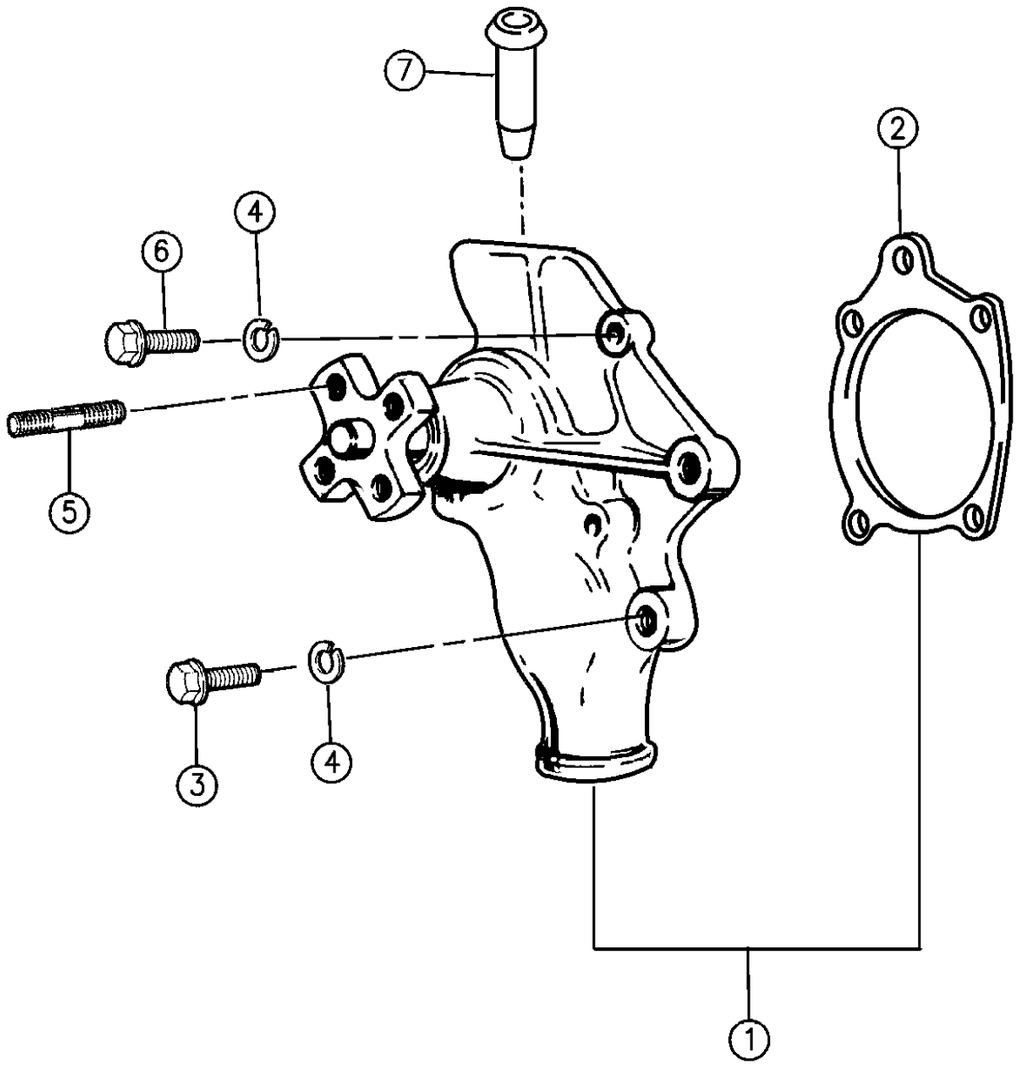

94J07 205

ITEM	PART NUMBER	QTY	BODY	MODEL	DESCRIPTION
1	4626 054	1			PUMP PACKAGE, Coolant, 2.5L - 4.0L Engine ***
2	5302 0420	1			GASKET
3	J400 6908	2			BOLT
4	J012 0214	8			WASHER
5	J400 6714	4			STUD
6					BOLT
	J400 3872	2			2.5L Engine
	J943 1975	2			4.0L Engine
7	5300 7978	1			TUBE, Water Pump Heater Return

MODEL CODES:

72=2 DR Wagon
74=4 DR Wagon
77=Open Body 93" Whlbase
78=Open Body 103" Whlbase - Export
T=2WD
J,N=4WD
U=4WD (RHD)

BODY STYLES:

YJ=Wrangler (4X4) "S"
Weangler (4X4) SE
Wrangler (4X4) Sahara
Wrangler (4X4) Renegade

XJ=Cherokee SE
Cherokee Sport
Cherokee Country

ZJ=Grand Cherokee SE
Grand Cherokee Laredo
Grand Cherolee Limited
ZG=Grand Cherokee European

Y1=Wrangler
X1=Cherokee
Z1=Grand Cherokee
KDX=Vehicles

AR = Use as Required - = Non Illustrated Part P.A.R. = Paint as Required

WATER PUMP AND RELATED PARTS 2.5, 4.0 AND 2.1 DIESEL ENGINE XJ, ZJ, ZG BODY
Figure 7-210

7-210A

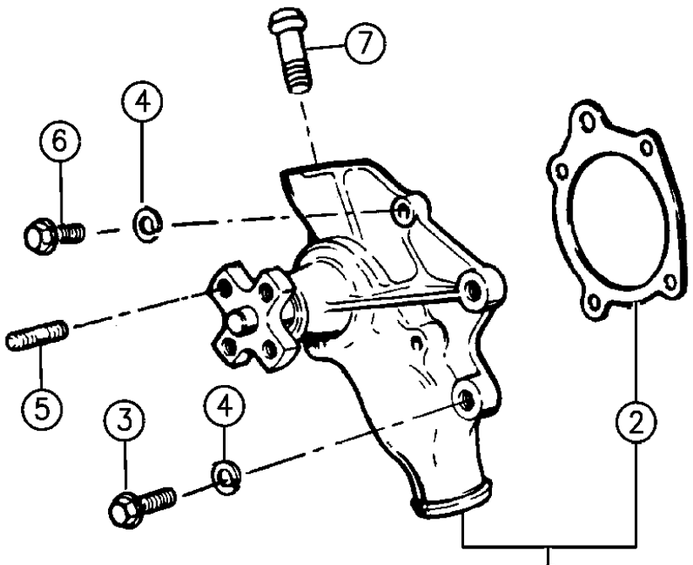

2.5L, 4.0L ENGINE

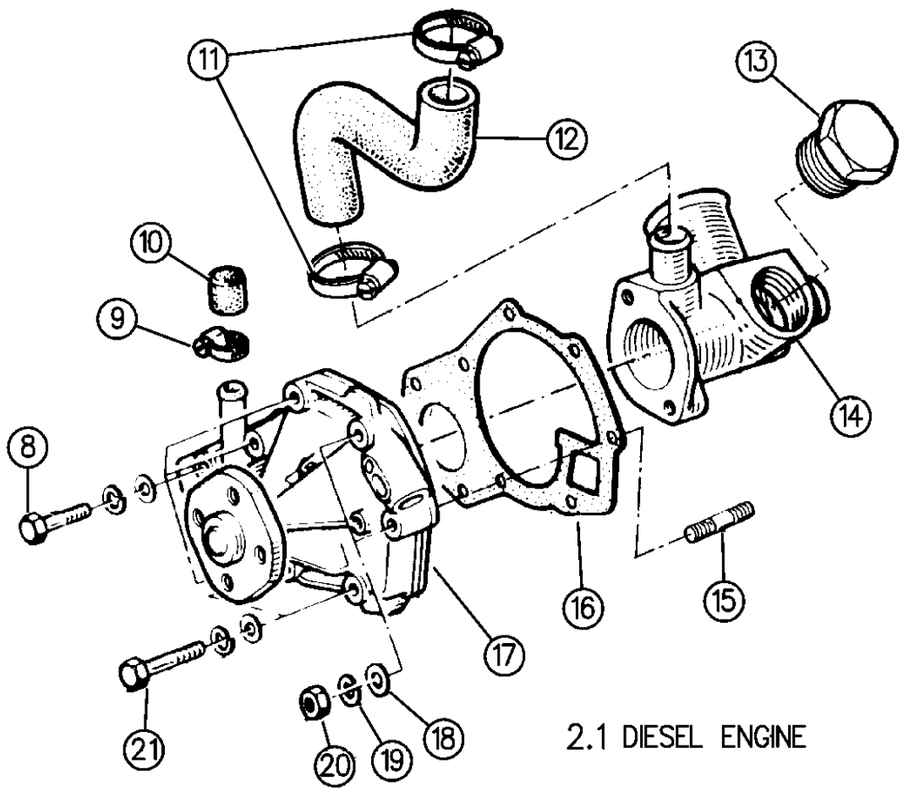

2.1 DIESEL ENGINE

94J07 210

ITEM	PART NUMBER	QTY	BODY	MODEL	DESCRIPTION
1					PACKAGE, Water Pump
	4626 054				2.5L Engine
	4637 500	1			2.5L Engine, CHINA
	4626 215	1			4.0L Engine
	4626 054	1	ZJ,ZG		4.0L Engine
	6034 328	1			NIPPLE, Water Pump, Heater Hose
2	5302 0420	1			GASKET
3	J400 6908	2			BOLT
4	J012 0214	4			WASHER
5					
	J400 6714	4			STUD
	J027 1184	4			NUT
6					BOLT
	J400 3872	2			2.5L Engine
	J812 1298	3			4.0L Engine
7	5300 7978	1			TUBE, Water Pump Heater Return
8	T300 1123	4			BOLT
9	3300 0784	1			CLAMP
10	T065 7697	1			CAP
11	J320 3077	2			CLAMP
12	T066 1636	1			HOSE
13	T307 5133	1			PLUG
14	T071 5330	1			OUTLET, Water Pump
15	T302 7095	2			STUD
16	J073 5848	1			GASKET
	5302 0420	1	ZJ,ZG		1996
17					PACKAGE, Water Pump
	JR77 5056	1			Reman
	T146 1336	1			Export
18	T305 3074	14			WASHER, Flat
19	T305 5031	14			WASHER, Lock
20	J303 2012	2			NUT
21	J300 1607	2			BOLT

MODEL CODES:

72=2 DR Wagon
74=4 DR Wagon
77=Open Body 93" Whlbase
78=Open Body 103" Whlbase - Export
T=2WD
J,N=4WD
U=4WD (RHD)

BODY STYLES:

YJ=Wrangler (4X4) "S"
Weangler (4X4) SE
Wrangler (4X4) Sahara
Wrangler (4X4) Renegade
XJ=Cherokee SE
Cherokee Sport
Cherokee Country
ZJ=Grand Cherokee SE
Grand Cherokee Laredo
Grand Cherolee Limited
ZG=Grand Cherokee European
Y1=Wrangler
X1=Cherokee
Z1=Grand Cherokee
KDX=Vehicles

AR = Use as Required - = Non Illustrated Part P.A.R. = Paint as Required

WATER PUMP AND WATER MANIFOLD 2.5 DIESEL ENGINE XJ BODY
Figure 7-215

7-215A

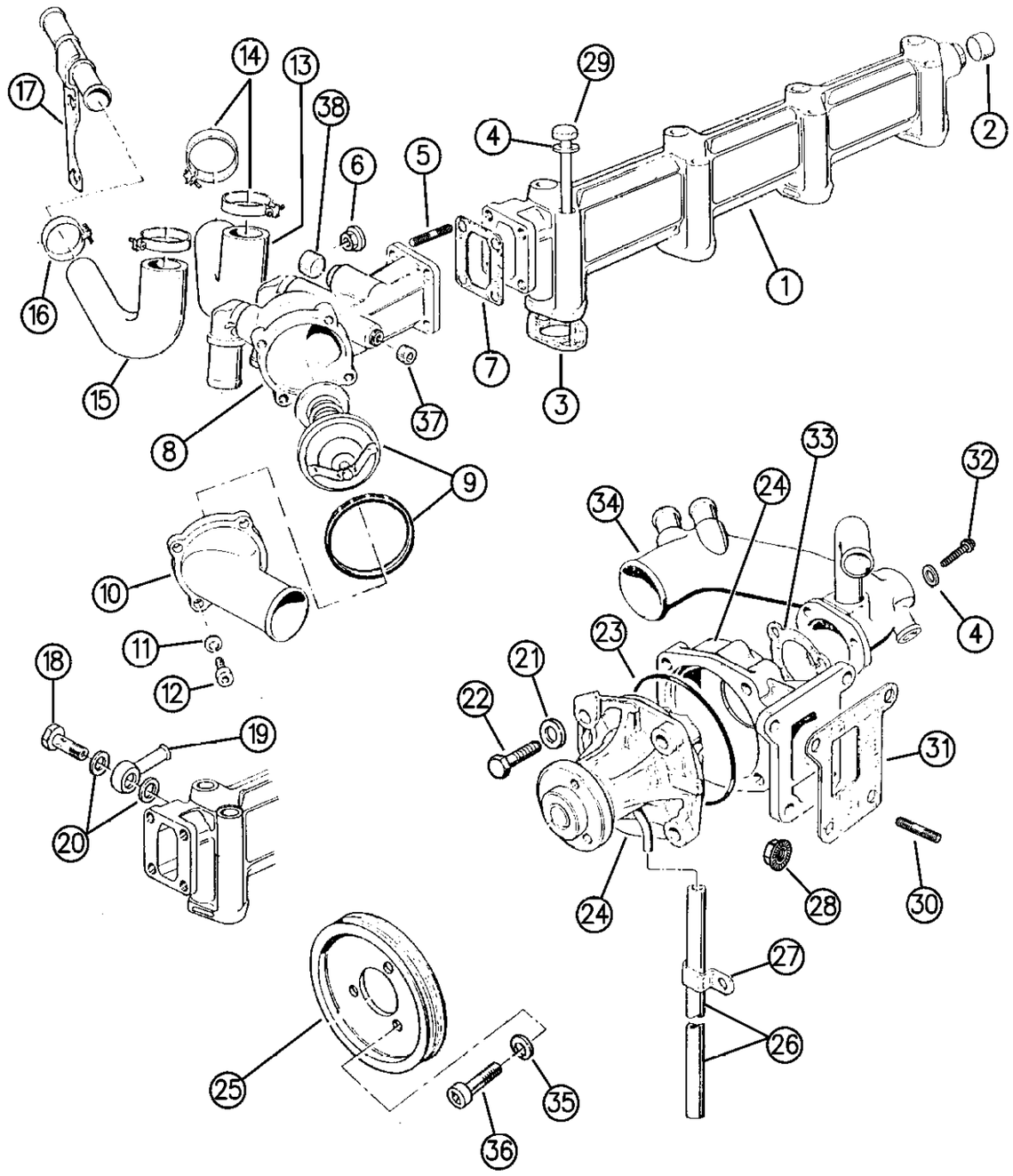

ITEM	PART NUMBER	QTY	BODY	MODEL	DESCRIPTION
1	4778 966	1			MANIFOLD, Water ***
2	4798 311	1			PLUG
3	4720 450	4			GASKET, Manifold
4	4720 305	11			WASHER
5	4797 764	4			STUD
6	4778 936	4			NUT
7	4778 971	1			GASKET, Thermostat to Water Manifold
8	4778 974	1			HOUSING, Thermostat
9	4778 975	1			VALVE, Thermostatic
10	4778 976	1			COVER, Thermostat Housing
11	4720 305	4			WASHER
12	4720 658	4			SCREW
13	4778 977	1			HOSE, By-Pass
14	4778 978	3			CLIP
15					HOSE, Heater Feed
	4778 979	1			1995
	4864 564	1			1996
16	4720 694	1			CLIP
17	4778 980	1			PIPE, Heater Feed
18	4720 358	1			BOLT, Banjo
19	4720 439	1			BANJO, Air Bleed ***
20	4720 554	2			WASHER
21	4723 200	4			WASHER
22	4723 199	4			BOLT
23	4723 198	1			O-RING, Pump
24					PUMP, Water
	4773 700	1			1995
	4864 566	1			1996
25	4778 982	1			PULLEY, Water Pump
26	4720 438	1			PIPE, Water Pump Drain
27	4720 446	1			CLIP, Drain Pipe
28	4778 961	4			NUT
29	4778 983	8			BOLT
30	4720 550	4			STUD
31					GASKET, Water Pump
	4720 451	1			1995
	4864 575	1			1996
32	4720 551	3			SCREW
33	4720 449	1			GASKET, Pump to Pipe
34					ADAPTOR, Water Return to Pump ***
	4778 985	1			1995
	4864 576	1			1996

MODEL CODES:

72=2 DR Wagon
74=4 DR Wagon
77=Open Body 93" Whlbase
78=Open Body 103" Whlbase - Export
T=2WD
J,N=4WD
U=4WD (RHD)

BODY STYLES:

YJ=Wrangler (4X4) "S"
Weangler (4X4) SE
Wrangler (4X4) Sahara
Wrangler (4X4) Renegade
XJ=Cherokee SE
Cherokee Sport
Cherokee Country
ZJ=Grand Cherokee SE
Grand Cherokee Laredo
Grand Cherolee Limited
ZG=Grand Cherokee European
Y1=Wrangler
X1=Cherokee
Z1=Grand Cherokee
KDX=Vehicles

AR = Use as Required - = Non Illustrated Part P.A.R. = Paint as Required

WATER PUMP AND WATER MANIFOLD 2.5 DIESEL ENGINE XJ BODY
Figure 7-215

7-215A

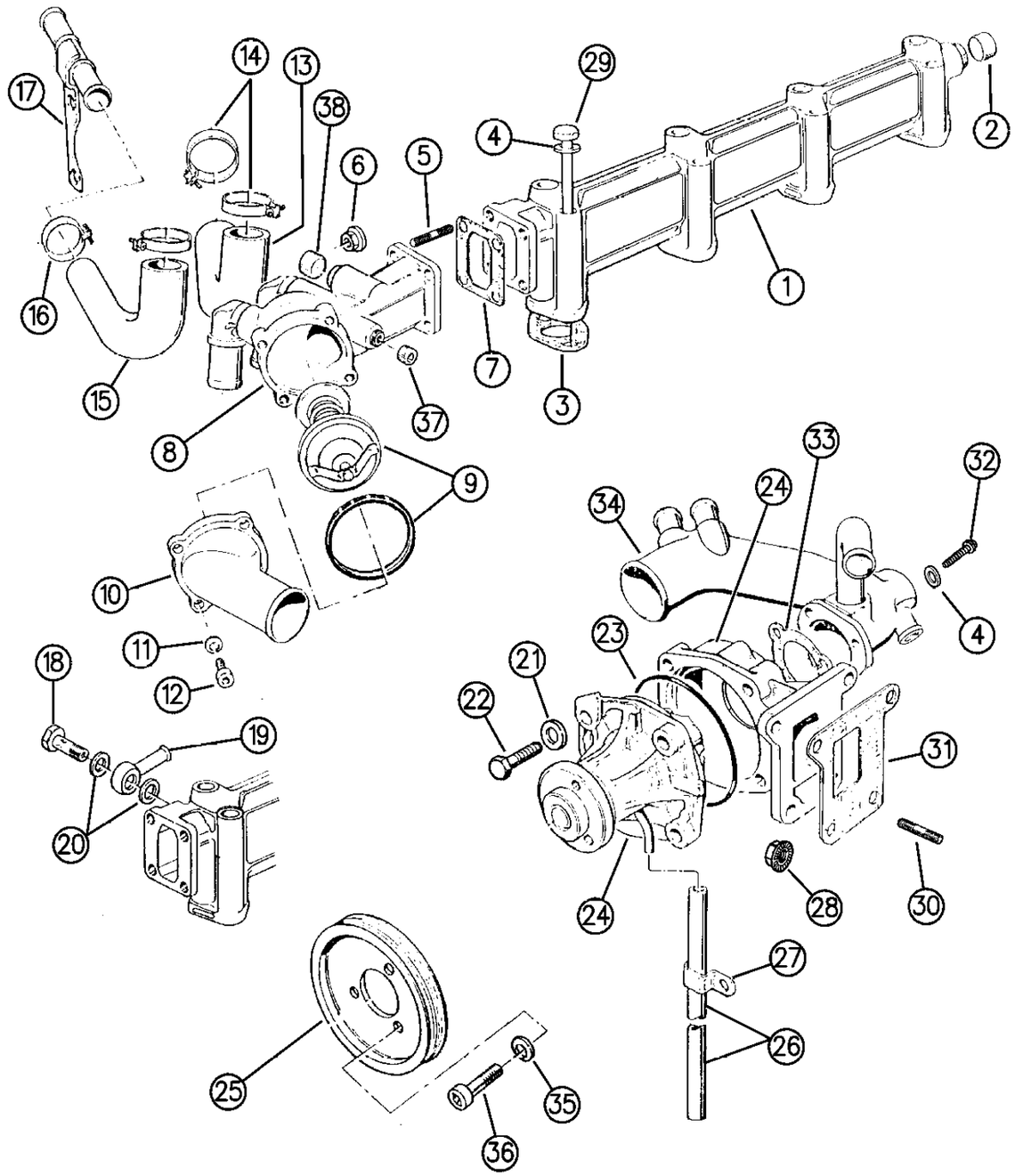

ITEM	PART NUMBER	QTY	BODY	MODEL	DESCRIPTION
35	4720 565	3			WASHER
36	4720 696	3			BOLT
37	4797 047	1			PLUG
38	4723 197	1			PLUG

MODEL CODES:

72=2 DR Wagon
74=4 DR Wagon
77=Open Body 93" Whlbase
78=Open Body 103" Whlbase - Export
T=2WD
J,N=4WD
U=4WD (RHD)

BODY STYLES:

YJ=Wrangler (4X4) "S"
Weangler (4X4) SE
Wrangler (4X4) Sahara
Wrangler (4X4) Renegade

XJ=Cherokee SE
Cherokee Sport
Cherokee Country

ZJ=Grand Cherokee SE
Grand Cherokee Laredo
Grand Cherolee Limited
ZG=Grand Cherokee European

Y1=Wrangler
X1=Cherokee
Z1=Grand Cherokee
KDX=Vehicles

AR = Use as Required - = Non Illustrated Part P.A.R. = Paint as Required

WATER PUMP AND RELATED PARTS 5.2 ENGINE ZJ, ZG BODY
Figure 7-220

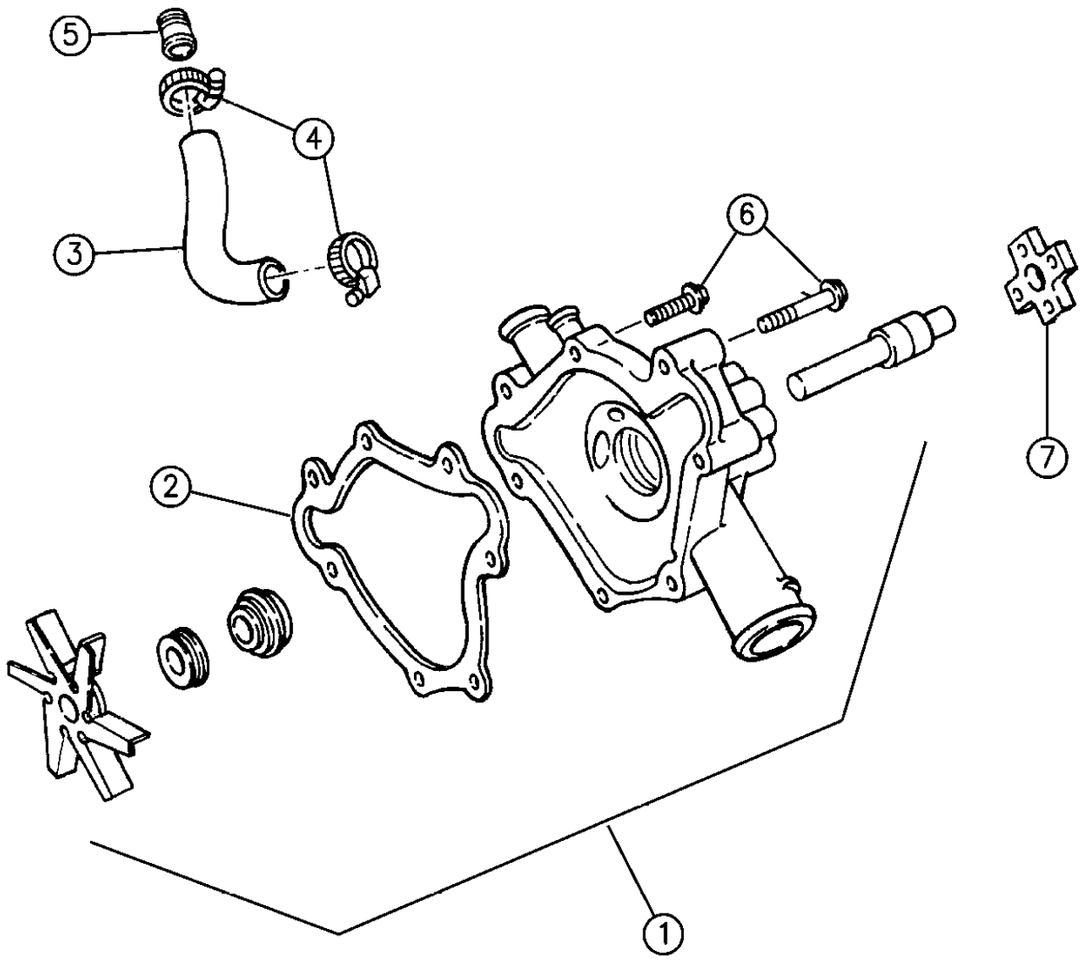

94J07 220

ITEM	PART NUMBER	QTY	BODY	MODEL	DESCRIPTION
1	5302 0280	1			PUMP, Water, w/o Gasket
2	4483 757	1			GASKET, Pump
	5302 1051	1			Water Outlet Elbow
3	5300 8654	1			HOSE, Water Pump By-Pass
4	4401 436	2			CLAMP
5	5302 0185	1			NIPPLE, By-Pass
6					SCREW, Pump Attaching
	6034 279	3			3/8 x 1.75
	6034 076	4			3/8 x 4.50
7	5300 8291	1			HUB, Pulley

MODEL CODES:

72=2 DR Wagon
74=4 DR Wagon
77=Open Body 93" Whlbase
78=Open Body 103" Whlbase - Export
T=2WD
J,N=4WD
U=4WD (RHD)

BODY STYLES:

YJ=Wrangler (4X4) "S"
Weangler (4X4) SE
Wrangler (4X4) Sahara
Wrangler (4X4) Renegade
XJ=Cherokee SE
Cherokee Sport
Cherokee Country
ZJ=Grand Cherokee SE
Grand Cherokee Laredo
Grand Cherolee Limited
ZG=Grand Cherokee European
Y1=Wrangler
X1=Cherokee
Z1=Grand Cherokee
KDX=Vehicles

AR = Use as Required - = Non Illustrated Part P.A.R. = Paint as Required

WATER PUMP AND WATER MANIFOLD 2.5 DIESEL ENGINE ZG BODY
Figure 7-225

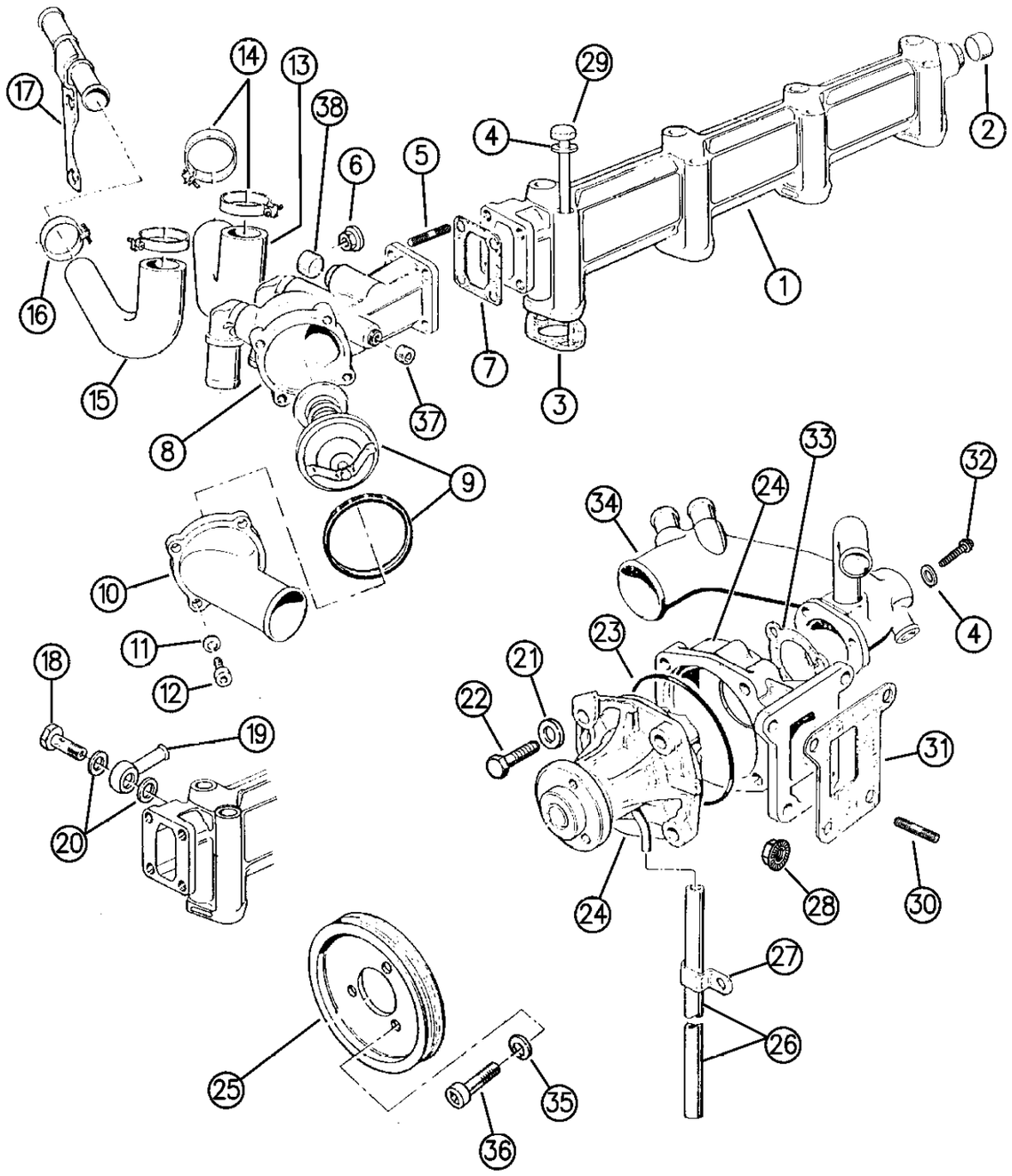

ITEM	PART NUMBER	QTY	BODY	MODEL	DESCRIPTION
1	4797 748	1			MANIFOLD, Water ***
2		1			PLUG (DNS)
3	4720 450	4			GASKET, Manifold
4	4720 305	11			WASHER
5	4797 764	4			STUD
6	4778 936	4			NUT
7	4778 971	1			GASKET, Thermostat to Water Manifold
8	4778 974	1			HOUSING, Thermostat
9	4778 975	1			VALVE, Thermostatic
10	4778 976	1			COVER, Thermostat Housing
11	4720 305	4			WASHER
12	4720 658	4			SCREW
13	4778 977	1			HOSE, By-Pass
14	4778 978	3			CLIP
15	4864 564	1			HOSE, Heater Feed
16	4720 694	1			CLIP
17	4796 171	1			PIPE, Heater Feed
18	4720 358	1			BOLT, Banjo
19	4720 358	1			BANJO, Air Bleed ***
20	4720 554	2			WASHER
21	4723 200	4			WASHER
22	4778 981	4			BOLT
23	4723 198	1			O-RING, Pump
24	4773 700	1			PUMP, Water
25	4778 982	1			PULLEY, Water Pump
26	4720 438	1			PIPE, Water Pump Drain
27	4720 446	1			CLIP, Drain Pipe
28	4778 961	4			NUT
29	4778 983	8			BOLT
30	4720 550	4			STUD
31	4720 451	1			GASKET, Water Pump
32	4720 551	3			SCREW
33	4720 449	1			GASKET, Pump to Pipe
34	4778 985	1			ADAPTOR, Water Return to Pump ***
35	4720 565	3			WASHER
36	4720 696	3			BOLT
37	4797 047	1			PLUG
38	4723 197	1			PLUG

MODEL CODES:

72=2 DR Wagon
74=4 DR Wagon
77=Open Body 93" Whlbase
78=Open Body 103" Whlbase - Export
T=2WD
J,N=4WD
U=4WD (RHD)

BODY STYLES:

YJ=Wrangler (4X4) "S"
Weangler (4X4) SE
Wrangler (4X4) Sahara
Wrangler (4X4) Renegade
XJ=Cherokee SE
Cherokee Sport
Cherokee Country
ZJ=Grand Cherokee SE
Grand Cherokee Laredo
Grand Cherolee Limited
ZG=Grand Cherokee European
Y1=Wrangler
X1=Cherokee
Z1=Grand Cherokee
KDX=Vehicles

AR = Use as Required - = Non Illustrated Part P.A.R. = Paint as Required

« RETURN TO GROUP INDEX

COOLANT TANK XJ, YJ BODY
Figure 7-305

7–305B

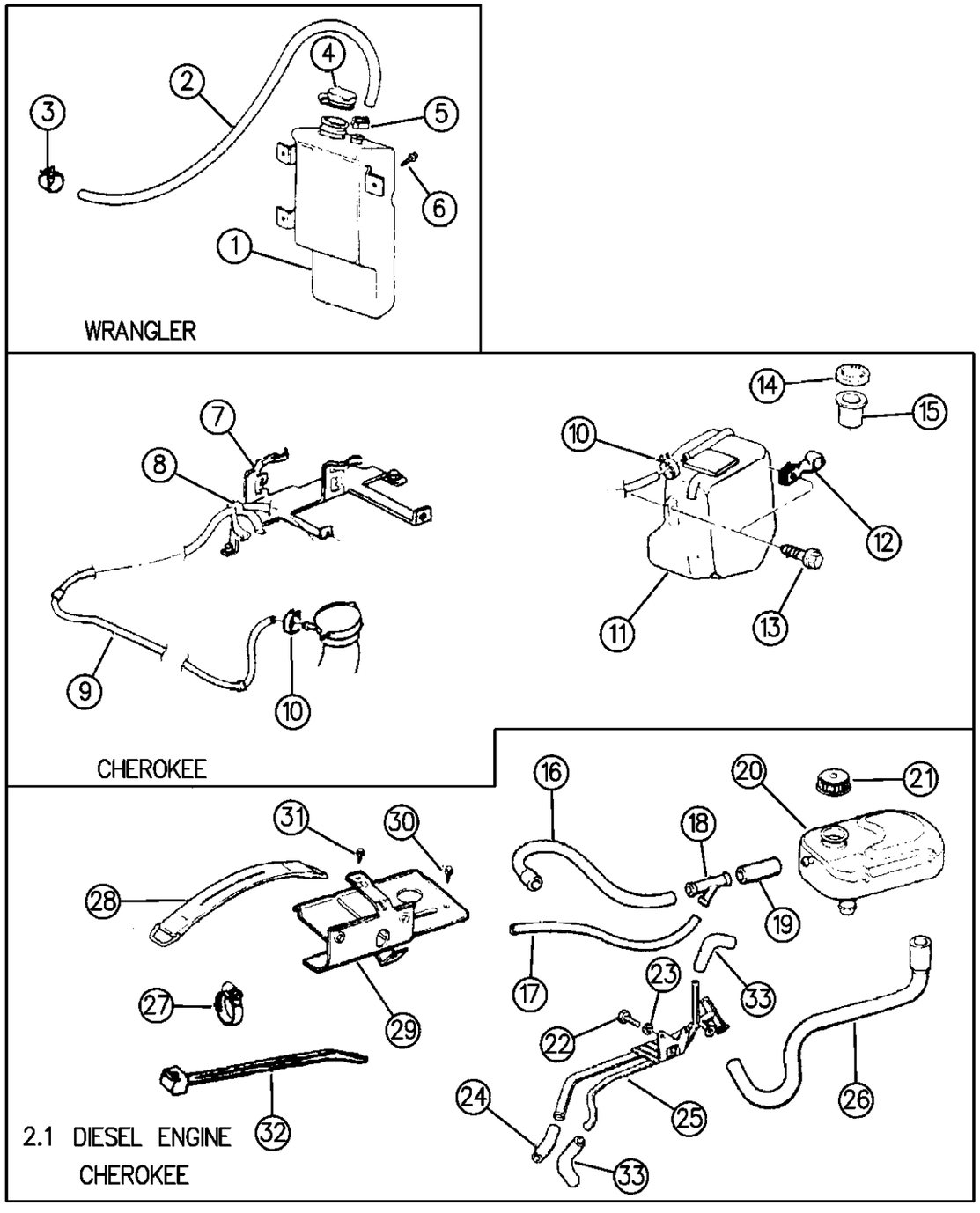

ITEM	PART NUMBER	QTY	BODY	MODEL	DESCRIPTION
1	J536 2920	1			BOTTLE, Coolant ***
2	J536 3169	1			HOSE
3	J318 1643	1			CLAMP
4	J322 3202	1			CAP, Coolant Bottle
5	3300 0784	1			CLAMP
6	J400 6850	3			BOLT
7	5601 7142	1			BRACKET
	5202 8078	1			RHD, 1994
	5202 8346	1			RHD, 1995-96
	5202 8347	1			RHD, Lower
8	5200 7404	1			CLIP, Hose, Overflow to Upper Radiator Hose
	J012 0526	1			CHINA
9					HOSE, Coolant Recovery
	4026 148	1			2.5L Engine
	J536 3169	1			4.0L Engine
	5200 4922	1			CHINA
10	6502 081	2			CLAMP
11					BOTTLE, Coolant ***
	5202 7984	1			
	5200 3213	1			CHINA ***
12	5300 9375	1			CLIP
13					SCREW (DNS)
14	4401 493	1			CAP, Bottle
	3300 0438	1			CHINA
15	3300 0576	1			BAFFLE, Bottle CHINA
16	5200 2064	1			HOSE, Thermostat to Tee
17	5200 2065	1			HOSE, Radiator to Tee
18	5200 2066	1			TEE
19					HOSE, Tee to Bottle
	5200 2070	1			1994
	5202 8079	1			1995-96
20	J075 8977	1			BOTTLE, Coolant ***
21	5200 6707	1			CAP, Coolant Bottle
22	J400 4986	2			BOLT
23	T305 5007	2			WASHER
24					HOSE, Tube to Water Pump
	T071 5737	1			J8S-814 Engine
	J074 5666	1			J8S-890 Engine
25					TUBE ASSEMBLY, Coolant ***
	T072 5376	1			J8S-814 Engine
	J085 4348	1			J8S-890 Engine
26	5200 2063	1			HOSE, Bottle To Heater

MODEL CODES:

72=2 DR Wagon 77=Open Body 93" Whlbase T=2WD U=4WD (RHD)
74=4 DR Wagon 78=Open Body 103" Whlbase - Export J,N=4WD

BODY STYLES:

YJ=Wrangler (4X4) "S"
Weangler (4X4) SE
Wrangler (4X4) Sahara
Wrangler (4X4) Renegade

XJ=Cherokee SE
Cherokee Sport
Cherokee Country

ZJ=Grand Cherokee SE
Grand Cherokee Laredo
Grand Cherolee Limited
ZG=Grand Cherokee European

Y1=Wrangler
X1=Cherokee
Z1=Grand Cherokee
KDX=Vehicles

AR = Use as Required - = Non Illustrated Part P.A.R. = Paint as Required

COOLANT TANK XJ, YJ BODY
Figure 7-305

7–305B

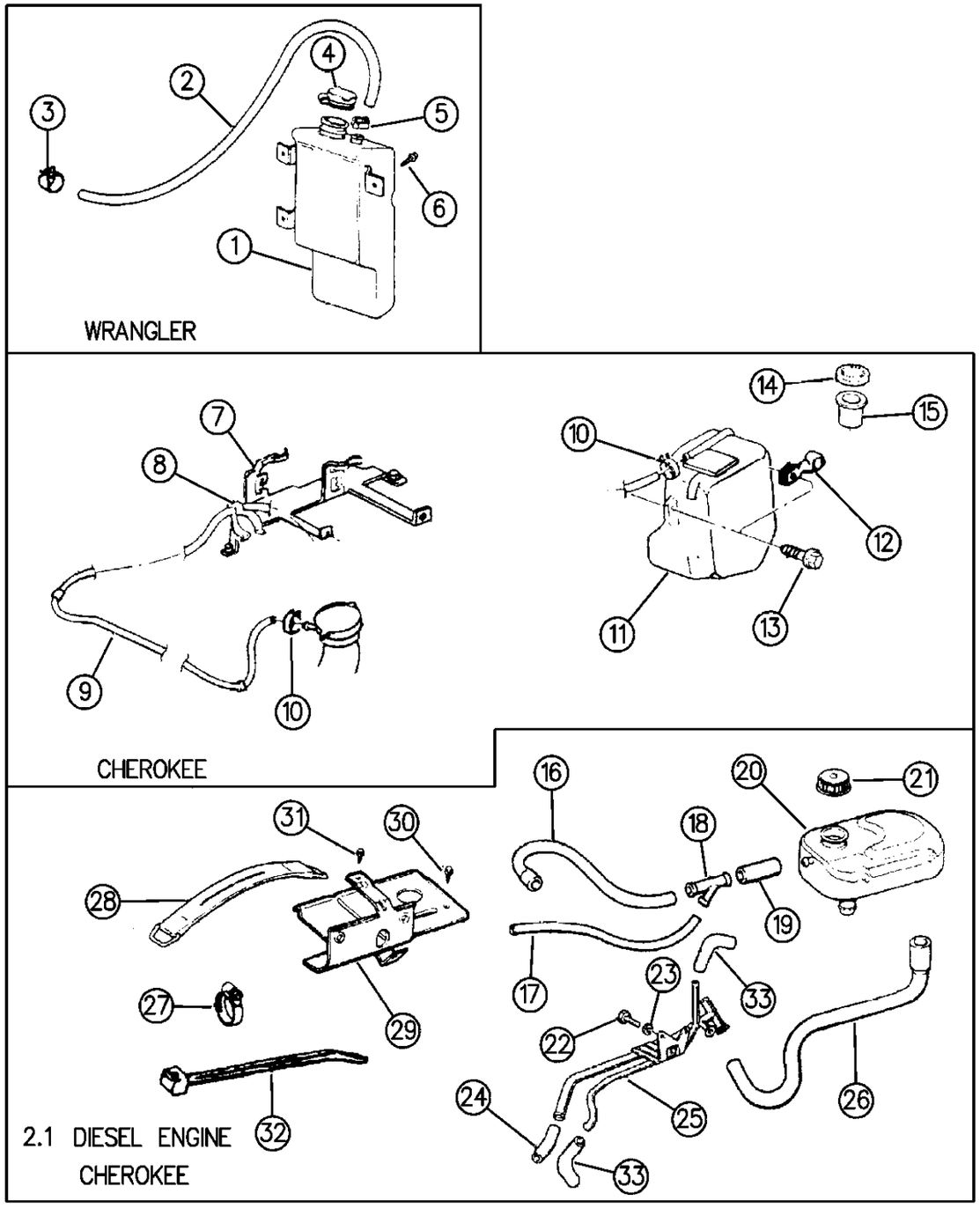

ITEM	PART NUMBER	QTY	BODY	MODEL	DESCRIPTION
27					CLAMP
	3300 0785	AR			12mm thru 20mm
	3300 0784	AR			17mm thru 25mm
	J320 3076	AR			14mm thru 27mm
	J320 3077	AR			21mm thru 44mm
	J320 3078	AR			33mm thru 57mm
28	J400 0715	1			STRAP, Coolant Bottle
29	5202 7673	1			BRACKET, Coolant Bottle
30	1150 2453	2			SCREW
31	3420 2399	1			BOLT
32					STRAP
	J322 3227	AR			Standard Duty Cooling - 200mm
	J369 3058	AR			Standard Duty Cooling - 300mm
	J323 0270	AR			Heavy Duty Cooling - 350mm
	J323 5187	AR			Heavy Duty Cooling - 450mm
33	J072 9451	2			HOSE, Oil Drain

MODEL CODES:

72=2 DR Wagon
74=4 DR Wagon
77=Open Body 93" Whlbase
78=Open Body 103" Whlbase - Export
T=2WD
J,N=4WD
U=4WD (RHD)

BODY STYLES:

YJ=Wrangler (4X4) "S"
Weangler (4X4) SE
Wrangler (4X4) Sahara
Wrangler (4X4) Renegade

XJ=Cherokee SE
Cherokee Sport
Cherokee Country

ZJ=Grand Cherokee SE
Grand Cherokee Laredo
Grand Cherolee Limited
ZG=Grand Cherokee European

Y1=Wrangler
X1=Cherokee
Z1=Grand Cherokee
KDX=Vehicles

AR = Use as Required - = Non Illustrated Part P.A.R. = Paint as Required

COOLANT TANK ZJ, ZG BODY
Figure 7-310

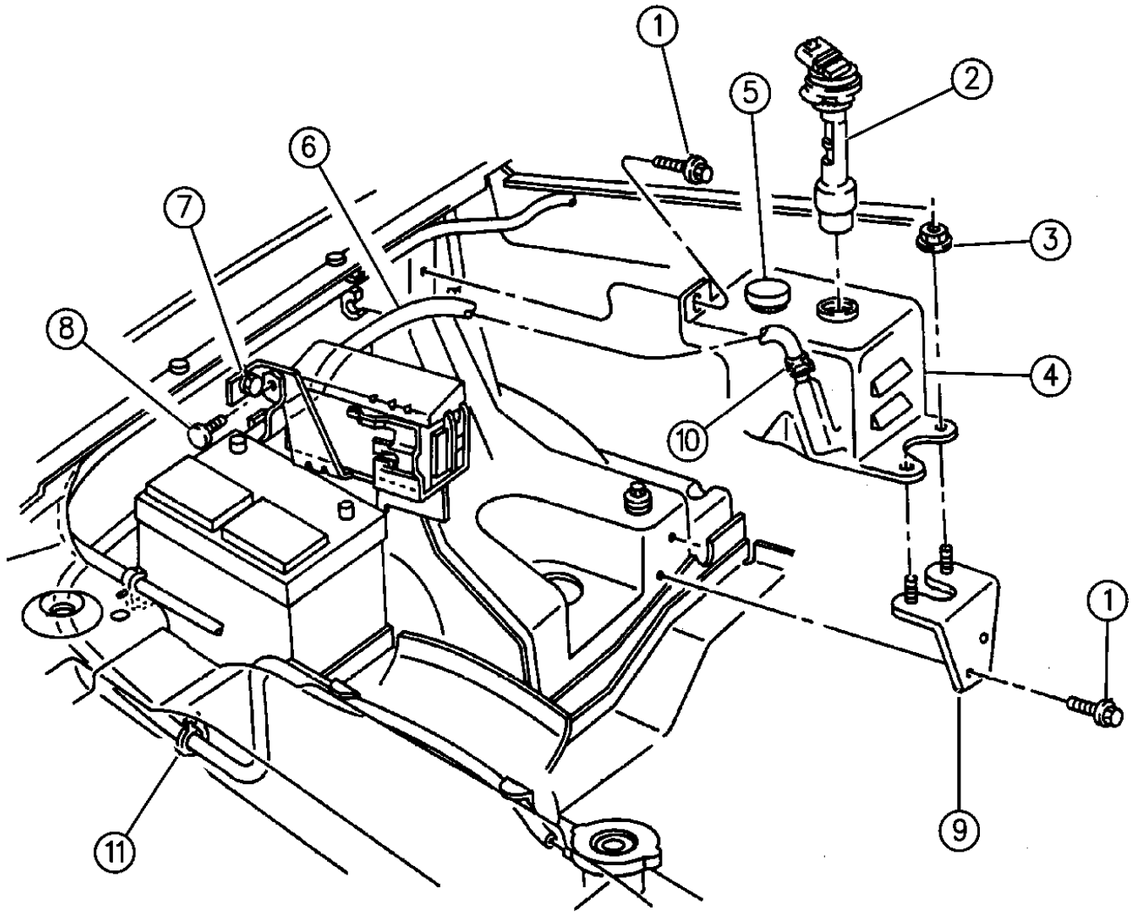

94J07 310

ITEM	PART NUMBER	QTY	BODY	MODEL	DESCRIPTION
1		3			SCREW (DNS)
2	5202 8031	1			SENSOR, Coolant Level
	5600 0595	1			GASKET, Sensor
	4546 142	1			PLUG, Sensor Hole
-	5202 8254	1			GROMMET
3	6501 859	2			NUT
4		1			BOTTLE, Coolant Reserve ***
	5200 5183	1			1994
	5202 8252	1			1995-96
	3300 0576	1			BAFFLE, Coolant Recovery Bottle
5					CAP, Bottle
	5200 5184	1			1994
	5202 8251	1			1995-96
6	4026 148	1			HOSE
7	6501 439	1			CLIP
8	J400 4919	1			FASTENER
9					BRACKET, Bottle Mtg.
	5202 7705	1			1994
	5202 8199	1			1995-96
	5305 4291	1	ZG		4.0L Engine, RHD
	5305 4295	1	ZG		2.5L Diesel(Contains 53054296 Bracket and Screw) RHD
	5305 4294	1	ZG		2.5L Diesel RHD
10	5202 7982	4			CLIP, Hose to Bottle
11	6034 648	1			CLIP, Hose

MODEL CODES:

72=2 DR Wagon
74=4 DR Wagon
77=Open Body 93" Whlbase
78=Open Body 103" Whlbase - Export
T=2WD
J,N=4WD
U=4WD (RHD)

BODY STYLES:

YJ=Wrangler (4X4) "S"
Weangler (4X4) SE
Wrangler (4X4) Sahara
Wrangler (4X4) Renegade
XJ=Cherokee SE
Cherokee Sport
Cherokee Country
ZJ=Grand Cherokee SE
Grand Cherokee Laredo
Grand Cherolee Limited
ZG=Grand Cherokee European
Y1=Wrangler
X1=Cherokee
Z1=Grand Cherokee
KDX=Vehicles

AR = Use as Required - = Non Illustrated Part P.A.R. = Paint as Required

DRIVE PULLEYS 1994-95 YJ, XJ BODY
Figure 7-405

7–405

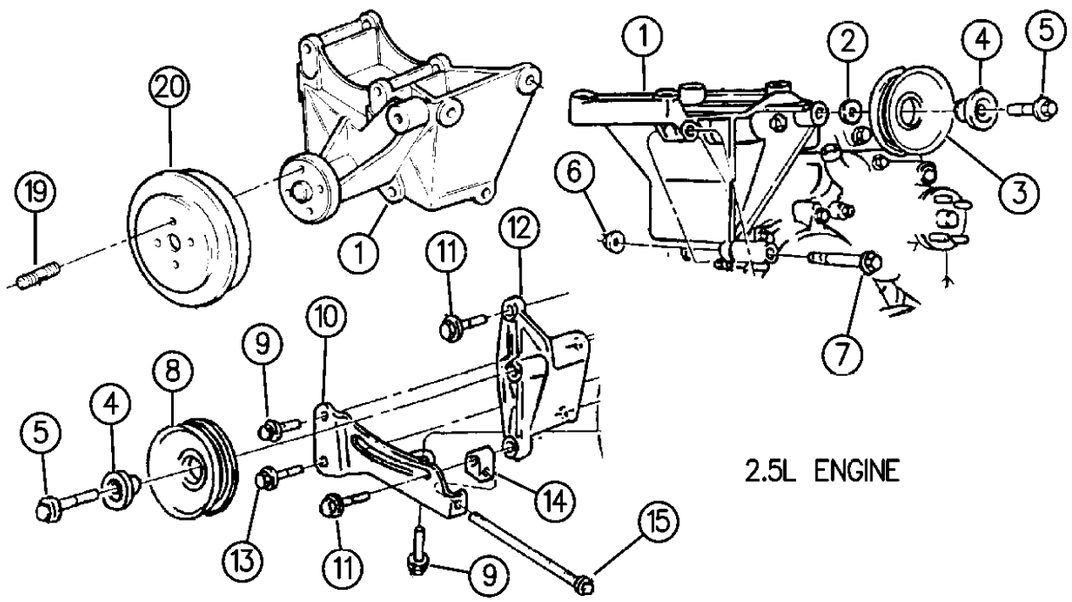

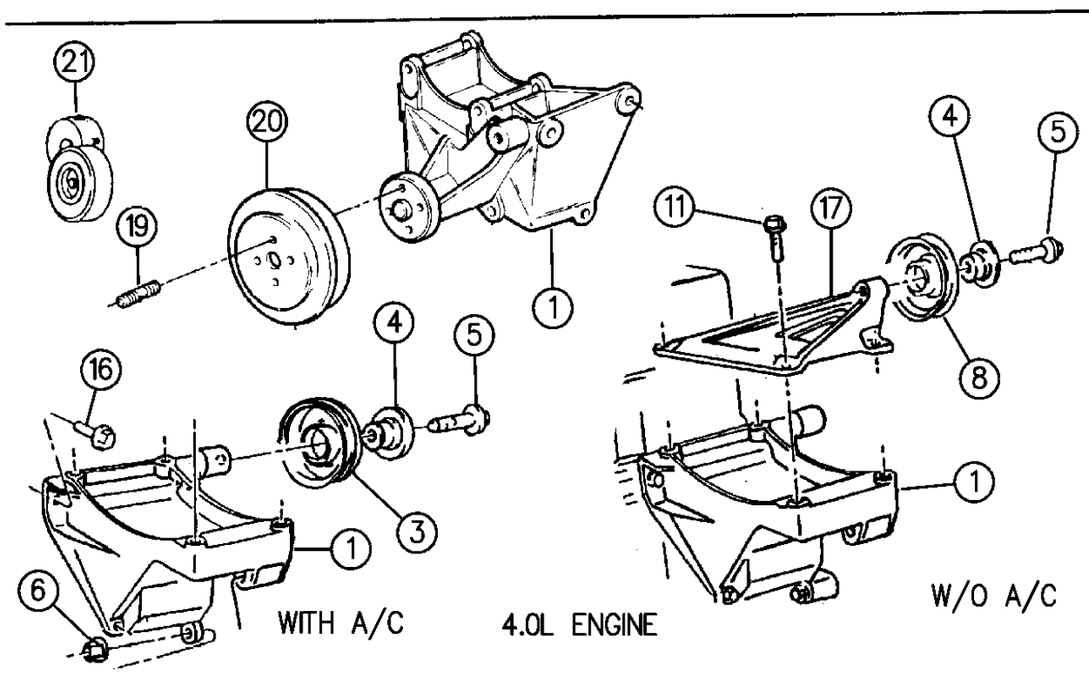

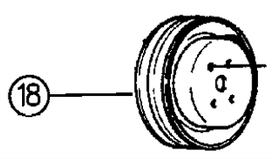

94J07 405

ITEM	PART NUMBER	QTY	BODY	MODEL	DESCRIPTION
1					BRACKET ASSEMBLY ***
	5300 7600	1	YJ		
	5300 7600	1	XJ		2.5L Engine LHD
	5301 0089	1	XJ		2.5L Engine RHD
	5300 6548	1	XJ		4.0L Engine, w/Air LHD
	5301 0163	1	XJ		4.0L Engine, w/o Air LHD
	5301 0023	1	XJ		4.0L Engine RHD
	5301 0125	1			BRACKET, Block to A/C Adapter, 4.0L Engine RHD
2	3420 2884	1			WASHER
3	5300 2905	1			PULLEY, Idler
	5301 0230	1			RHD
4	3300 2201	1			BUSHING
5					BOLT
	6502 137	1			
	6502 138	1			with A/C
6	6502 135	1			NUT
7	6502 138	1			BOLT
8					PULLEY, Idler
	5300 2903	1			1994
	4792 112	1			1995
	6503 230	1	YJ		SPACER, Pulley
9		AR			BOLT (DNS)
10	5300 2913	1			BRACKET
11		2			SCREW (DNS)
12	5300 8155	1			BRACKET, w/o Power Steering
13	6025 063	5			BOLT
14	5300 2915	1			COLLAR, Adjusting
15	3420 2480	1			BOLT
16					SCREW (DNS)
17					BRACKET, Idler Pulley Mounting
	5300 8155	1	YJ		
	5300 6551	1	XJ		
18					PULLEY, Water Pump
	5300 7154	1	YJ		
	5300 7154	1	XJ		2.5L Engine
	J323 7564	1	XJ		2.5L Engine KDX
	5300 2907	1	XJ		4.0L Engine
19	J400 6714	4			STUD
20	5300 2906	1			PULLEY, Fan
21	4762 417	1			PACKAGE, Tensioner Belt, 4.0L Engine RHD

MODEL CODES:

72=2 DR Wagon
74=4 DR Wagon
77=Open Body 93" Whlbase
78=Open Body 103" Whlbase - Export
T=2WD
J,N=4WD
U=4WD (RHD)

BODY STYLES:

YJ=Wrangler (4X4) "S"
Weangler (4X4) SE
Wrangler (4X4) Sahara
Wrangler (4X4) Renegade
XJ=Cherokee SE
Cherokee Sport
Cherokee Country
ZJ=Grand Cherokee SE
Grand Cherokee Laredo
Grand Cherolee Limited
ZG=Grand Cherokee European
Y1=Wrangler
X1=Cherokee
Z1=Grand Cherokee
KDX=Vehicles

AR = Use as Required - = Non Illustrated Part P.A.R. = Paint as Required

« RETURN TO GROUP INDEX

DRIVE PULLEYS 2.5L ENGINE, 1996 XJ BODY
Figure 7-407

7-407

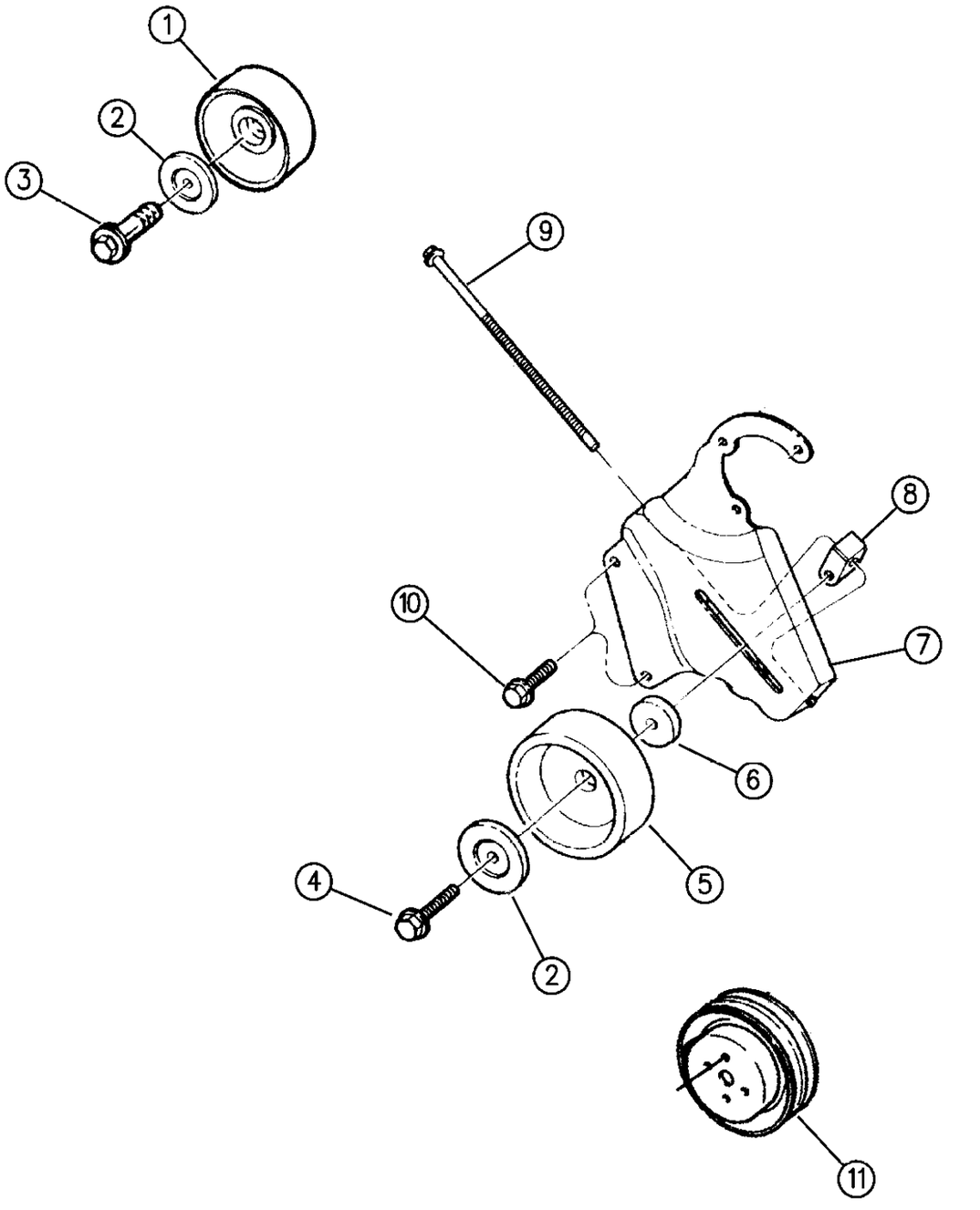

ITEM	PART NUMBER	QTY	BODY	MODEL	DESCRIPTION
1	5301 0230	1			PULLEY, Idler
2	3300 2201	2			BUSHING
3	6504 239	1			BOLT, Idler Pulley
4	3420 2029	1			BOLT
5	4792 112	1			PULLEY, Belt Tensioning
6	6503 230	1			SPACER, Tensioning Pulley
7	5301 0148	1			BRACKET, Belt Tensioning Adj.
8	5301 0149	1			COLLAR, Tensioning Adj.
9	6503 198	1			BOLT
10		AR			SCREW (DNS)
11	5300 7154	1			PULLEY, Water Pump

MODEL CODES:

72=2 DR Wagon
74=4 DR Wagon
77=Open Body 93" Whlbase
78=Open Body 103" Whlbase - Export
T=2WD
J,N=4WD
U=4WD (RHD)

BODY STYLES:

YJ=Wrangler (4X4) "S"
Weangler (4X4) SE
Wrangler (4X4) Sahara
Wrangler (4X4) Renegade
XJ=Cherokee SE
Cherokee Sport
Cherokee Country
ZJ=Grand Cherokee SE
Grand Cherokee Laredo
Grand Cherolee Limited
ZG=Grand Cherokee European
Y1=Wrangler
X1=Cherokee
Z1=Grand Cherokee
KDX=Vehicles

AR = Use as Required - = Non Illustrated Part P.A.R. = Paint as Required

DRIVE PULLEYS 4.0L ENGINE, 1996 XJ BODY
Figure 7-408

7-408

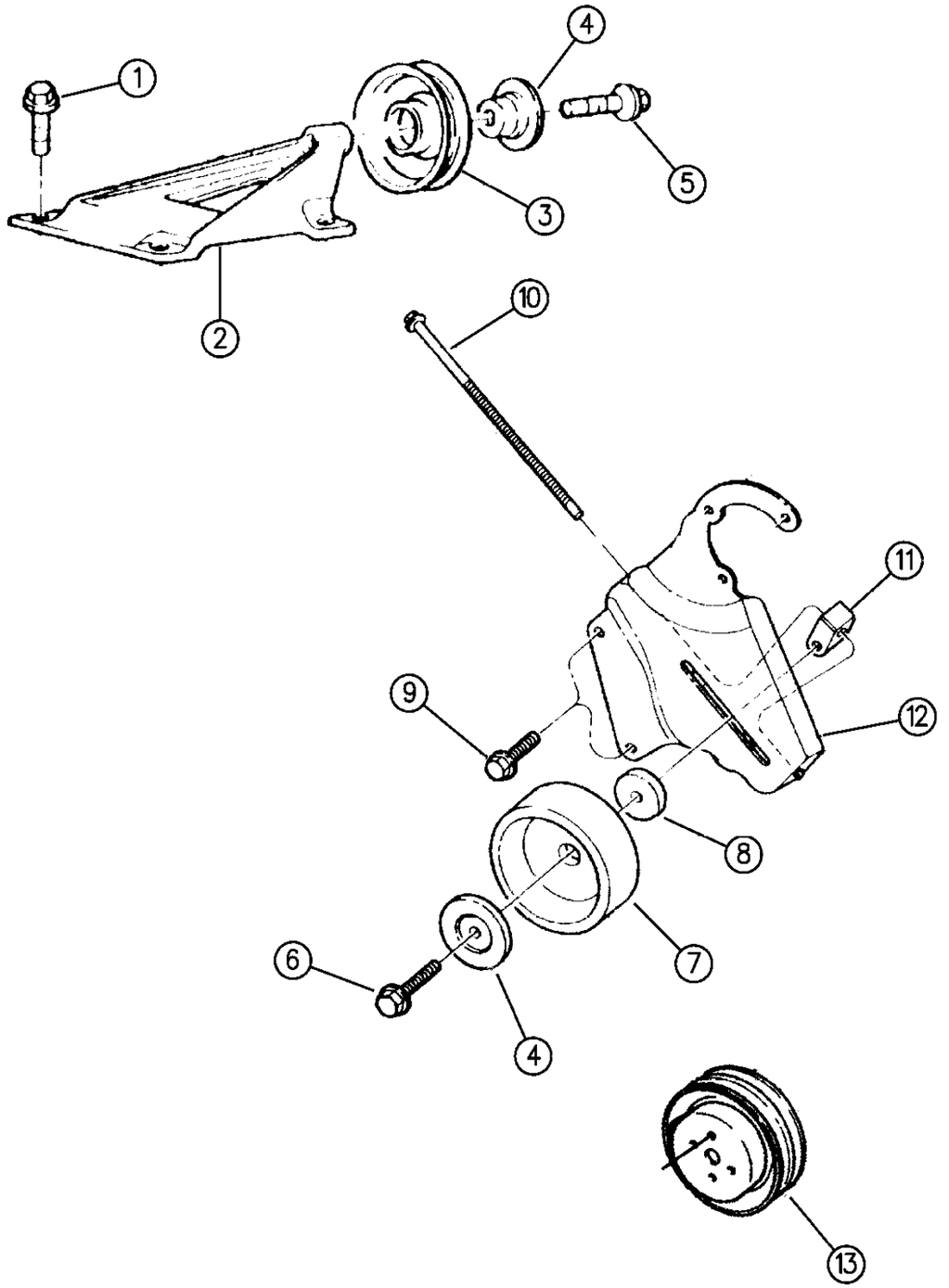

ITEM	PART NUMBER	QTY	BODY	MODEL	DESCRIPTION
1		AR			SCREW (DNS)
2	5300 6551	1			BRACKET, Idler Pulley Mtg.
3	5300 2903	1			PULLEY, Idler
4	3300 2201	AR			BUSHING
5	6504 239	AR			SCREW
6	3420 2029	1			BOLT
7	4792 112	1			PULLEY, Belt Tensioning
8	6503 230	1			SPACER, Tensioning Pulley
9		AR			SCREW (DNS)
10	6503 198	1			BOLT
11	5301 0149	1			COLLAR
12	5301 0148	1			BRACKET, Tensioning Adj.
13	5300 2907	1			PULLEY, Water Pump
	5301 0309	1			PULLEY, Fan
	5301 1003	1	X1		Severe Use

MODEL CODES:

72=2 DR Wagon
74=4 DR Wagon
77=Open Body 93" Whlbase
78=Open Body 103" Whlbase - Export
T=2WD
J,N=4WD
U=4WD (RHD)

BODY STYLES:

YJ=Wrangler (4X4) "S"
Weangler (4X4) SE
Wrangler (4X4) Sahara
Wrangler (4X4) Renegade
XJ=Cherokee SE
Cherokee Sport
Cherokee Country
ZJ=Grand Cherokee SE
Grand Cherokee Laredo
Grand Cherolee Limited
ZG=Grand Cherokee European
Y1=Wrangler
X1=Cherokee
Z1=Grand Cherokee
KDX=Vehicles

AR = Use as Required - = Non Illustrated Part P.A.R. = Paint as Required

« RETURN TO GROUP INDEX

DRIVE PULLEYS 4.0L ENGINE, 1996 XJ BODY RHD
Figure 7-409

7-409

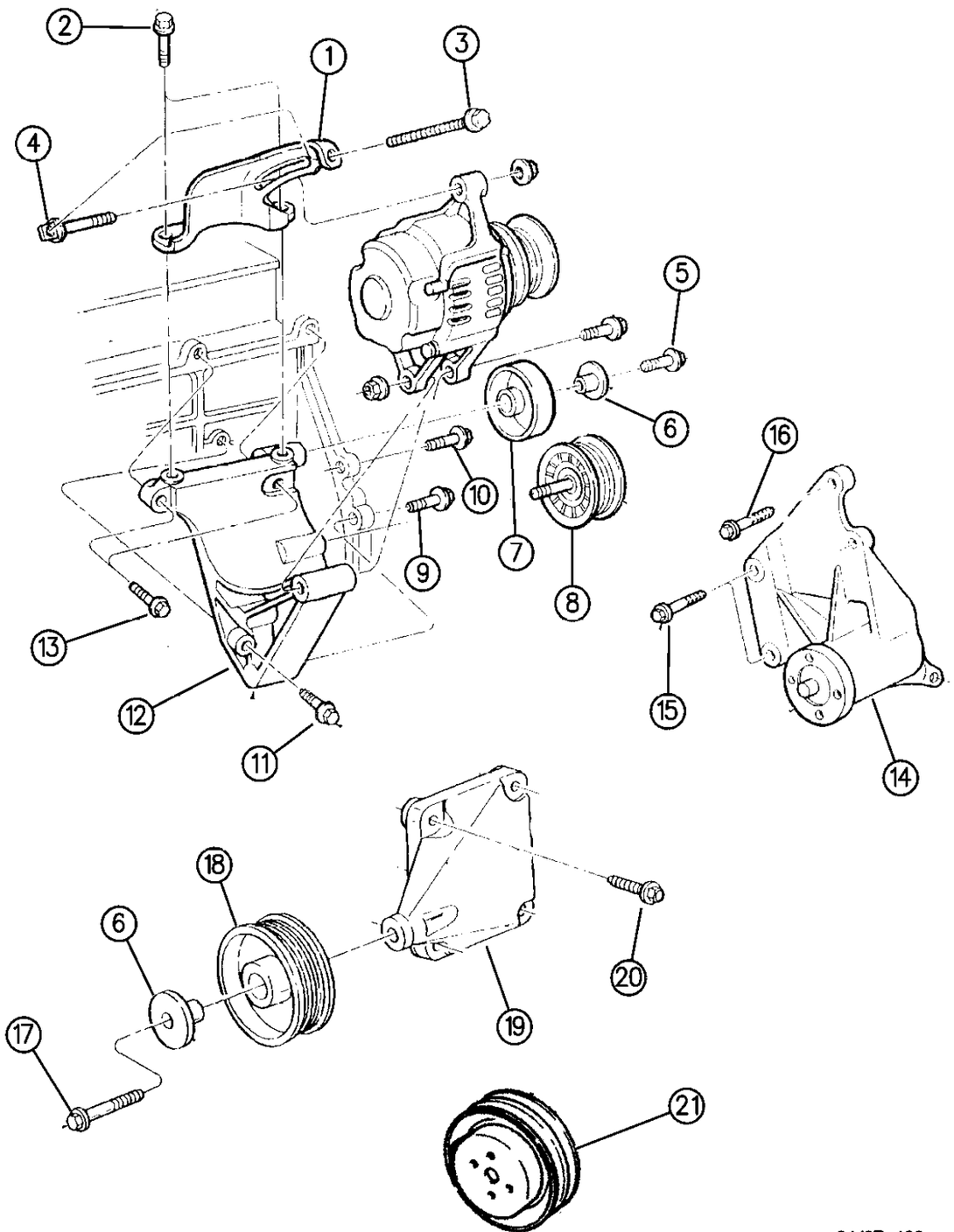

ITEM	PART NUMBER	QTY	BODY	MODEL	DESCRIPTION
1	5301 0190	1			BRACKET, Belt Tensioning Adj.
2	6502 144	2			SCREW
3	6502 929	1			SCREW
4	6502 592	1			SCREW
5	6502 137	1			SCREW
6	3300 2201	AR			BUSHING
7	5301 0230	1			PULLEY, Idler
8	5301 0228	1			PULLEY, Idler
9		1			BOLT (DNS) ***
10		2			SCREW (DNS)
11	6034 497	1			SCREW
12		1			BRACKET, Alternator, See Group 8
13		2			SCREW, .375-16x1.625 (Not Serv.)
14	5301 0243	1			BRACKET, Fan Mtg.
15	6025 063	2			SCREW
16	6502 425	3			SCREW
17	6504 239	1			SCREW
18	5300 2903	1			PULLEY, Idler
19	5301 0163	1			BRACKET, Idler Pulley Mtg.
20		4			SCREW (DNS)
21	5300 2907	1			PULLEY, Water Pump

MODEL CODES:

72=2 DR Wagon
74=4 DR Wagon
77=Open Body 93" Whlbase
78=Open Body 103" Whlbase - Export
T=2WD
J,N=4WD
U=4WD (RHD)

BODY STYLES:

YJ=Wrangler (4X4) "S"
Weangler (4X4) SE
Wrangler (4X4) Sahara
Wrangler (4X4) Renegade

XJ=Cherokee SE
Cherokee Sport
Cherokee Country

ZJ=Grand Cherokee SE
Grand Cherokee Laredo
Grand Cherolee Limited
ZG=Grand Cherokee European

Y1=Wrangler
X1=Cherokee
Z1=Grand Cherokee
KDX=Vehicles

AR = Use as Required - = Non Illustrated Part P.A.R. = Paint as Required

« RETURN TO GROUP INDEX

DRIVE PULLEYS 2.1 DIESEL ENGINE, 1994 XJ BODY
Figure 7-410

7-410

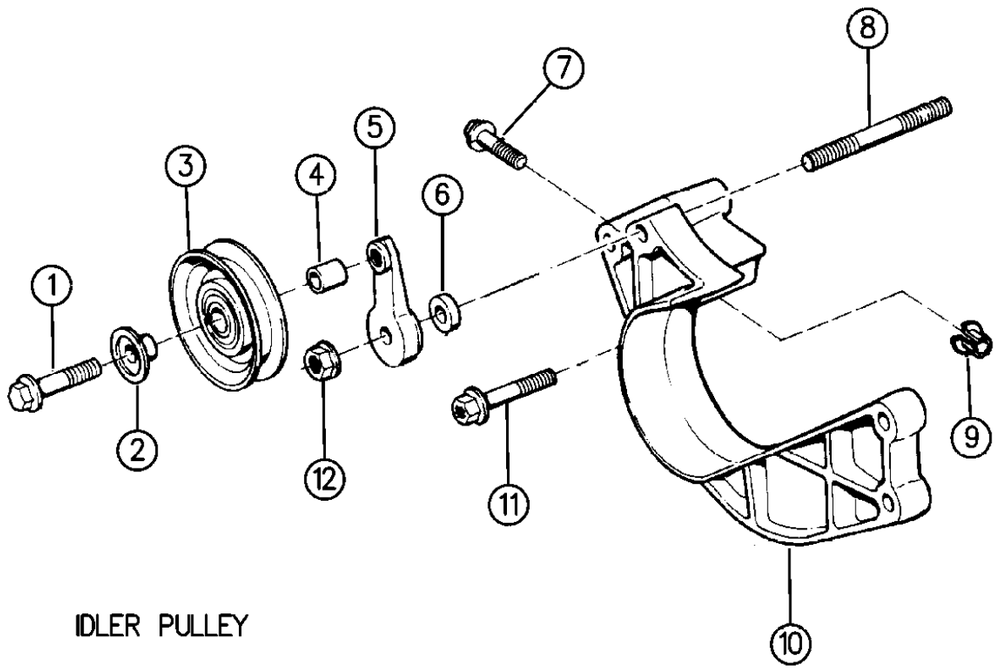

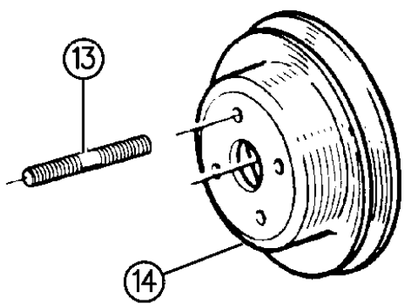

94J07 410

ITEM	PART NUMBER	QTY	BODY	MODEL	DESCRIPTION
1	3420 2060	1			BOLT
2	3300 2201	1			BUSHING
3	J324 0577	1			PULLEY, Idler
4	3420 2054	1			SPACER
5	J324 0576	1			ECCENTRIC, Idler
6	3420 2053	1			SPACER
7	3420 1869	1			BOLT
8	3420 1743	1			STUD
9	5300 0548	1			SPACER
10	5300 1771	1			BRACKET, Idler
11	3420 2047	1			BOLT
12	J420 0081	1			NUT
13	3420 2197	4			STUD
14	T072 5803	1			PULLEY

MODEL CODES:

72=2 DR Wagon
74=4 DR Wagon
77=Open Body 93" Whlbase
78=Open Body 103" Whlbase - Export
T=2WD
J,N=4WD
U=4WD (RHD)

BODY STYLES:

YJ=Wrangler (4X4) "S"
Weangler (4X4) SE
Wrangler (4X4) Sahara
Wrangler (4X4) Renegade
XJ=Cherokee SE
Cherokee Sport
Cherokee Country
ZJ=Grand Cherokee SE
Grand Cherokee Laredo
Grand Cherolee Limited
ZG=Grand Cherokee European
Y1=Wrangler
X1=Cherokee
Z1=Grand Cherokee
KDX=Vehicles

AR = Use as Required - = Non Illustrated Part P.A.R. = Paint as Required

DRIVE PULLEYS 2.5 DIESEL ENGINE XJ BODY
Figure 7-415

7-415A

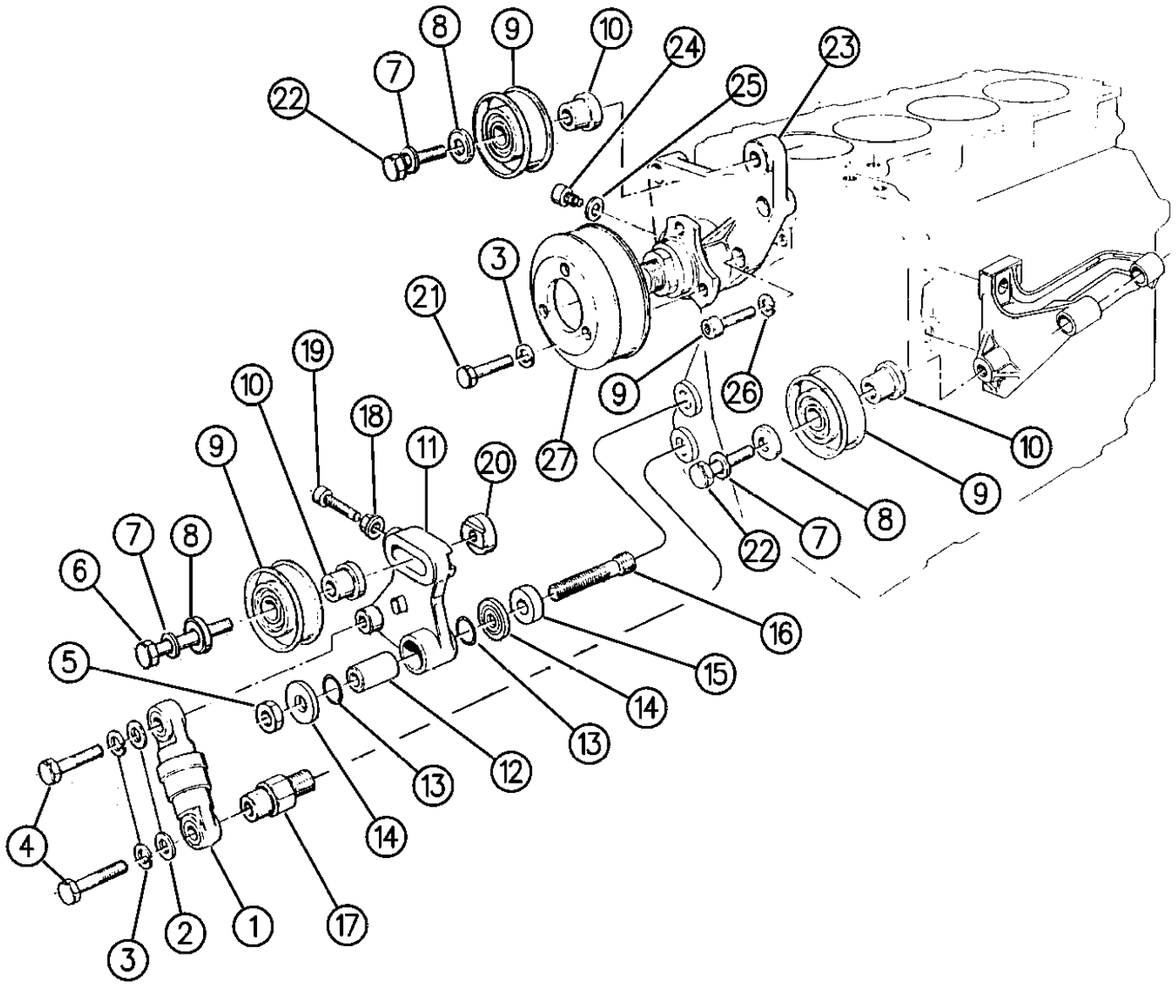

94J07 415

ITEM	PART NUMBER	QTY	BODY	MODEL	DESCRIPTION
1	4720 714	1			TENSIONER, Hydraulic
2	4720 193	2			WASHER
3	4723 165	5			WASHER
4	4723 199	2			BOLT
5	4723 271	1			NUT
6	4797 783	1			BOLT
7	4720 243	3			WASHER
8	4796 015	3			WASHER
9	4796 016	3			PULLEY Idler ***
10	4796 017	3			SHAFT, Idler Pulley
11	4796 018	1			BRACKET, Belt Tensioner
12	4728 197	1			TENSIONER, Shaft Belt
13	4728 198	2			O-RING
14	4728 200	2			SPACER
15	4796 019	1			SPACER
16	4796 020	1			STUD, Tensioner
17	4796 021	1			SPACER
18	4778 961	1			NUT
19	4797 772	1			SCREW (DNS)
20	4796 028	1			NUT
21	4723 164	3			BOLT
22	4797 773	2			BOLT
23	4796 029	1			BRACKET, Fan Support
24	4796 030	1			SCREW
25	4723 200	1			WASHER
26	4720 688	4			WASHER
27	4796 031	1			PULLEY, Fan Drive

MODEL CODES:

72=2 DR Wagon
74=4 DR Wagon
77=Open Body 93" Whlbase
78=Open Body 103" Whlbase - Export
T=2WD
J,N=4WD
U=4WD (RHD)

BODY STYLES:

YJ=Wrangler (4X4) "S"
Weangler (4X4) SE
Wrangler (4X4) Sahara
Wrangler (4X4) Renegade
XJ=Cherokee SE
Cherokee Sport
Cherokee Country
ZJ=Grand Cherokee SE
Grand Cherokee Laredo
Grand Cherolee Limited
ZG=Grand Cherokee European
Y1=Wrangler
X1=Cherokee
Z1=Grand Cherokee
KDX=Vehicles

AR = Use as Required - = Non Illustrated Part P.A.R. = Paint as Required

DRIVE PULLEYS 4.0 ENGINE ZJ, ZG BODY
Figure 7-420

7–420

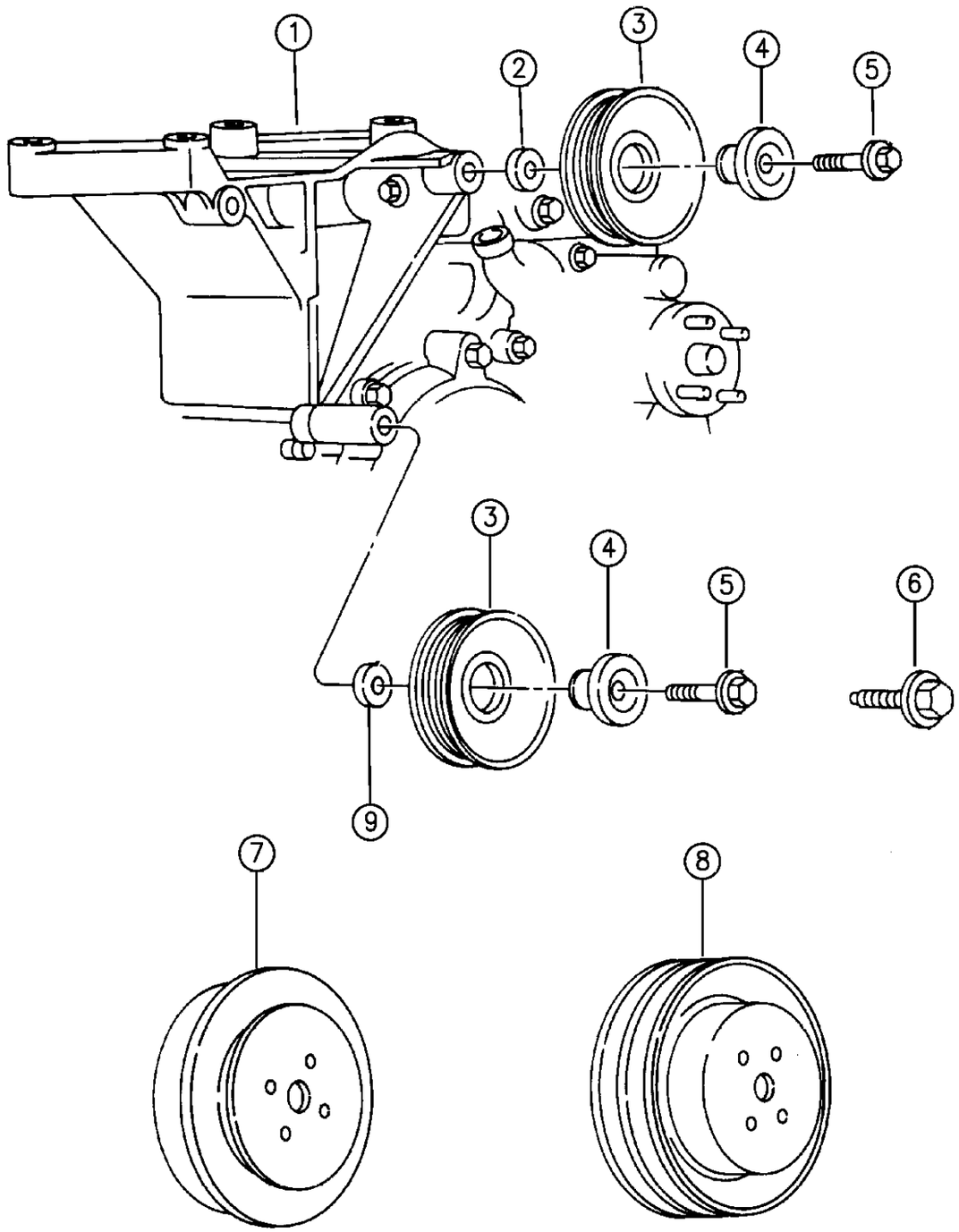

ITEM	PART NUMBER	QTY	BODY	MODEL	DESCRIPTION
1	5300 8443	1			BRACKET
	5305 4336	1	ZG		RHD
2	3420 2884	1			WASHER
3	5300 2905	2			PULLEY, Idler
4	3300 2201	2			BUSHING
5					BOLT, Idler Pulley
	6502 137	1			Upper Pulley
	6502 138	1			Lower Pulley
6	6502 957	1			BOLT, w/o A/C
7	5300 2906	1			PULLEY, Fan
8	5300 7154	1			PULLEY, Water Pump
9	6502 122	1			SPACER

MODEL CODES:

72=2 DR Wagon
74=4 DR Wagon
77=Open Body 93" Whlbase
78=Open Body 103" Whlbase - Export
T=2WD
J,N=4WD
U=4WD (RHD)

BODY STYLES:

YJ=Wrangler (4X4) "S"
Weangler (4X4) SE
Wrangler (4X4) Sahara
Wrangler (4X4) Renegade
XJ=Cherokee SE
Cherokee Sport
Cherokee Country
ZJ=Grand Cherokee SE
Grand Cherokee Laredo
Grand Cherolee Limited
ZG=Grand Cherokee European
Y1=Wrangler
X1=Cherokee
Z1=Grand Cherokee
KDX=Vehicles

AR = Use as Required - = Non Illustrated Part P.A.R. = Paint as Required

« RETURN TO GROUP INDEX

DRIVE PULLEYS 5.2 ENGINE ZJ, ZG BODY
Figure 7-430

7–430

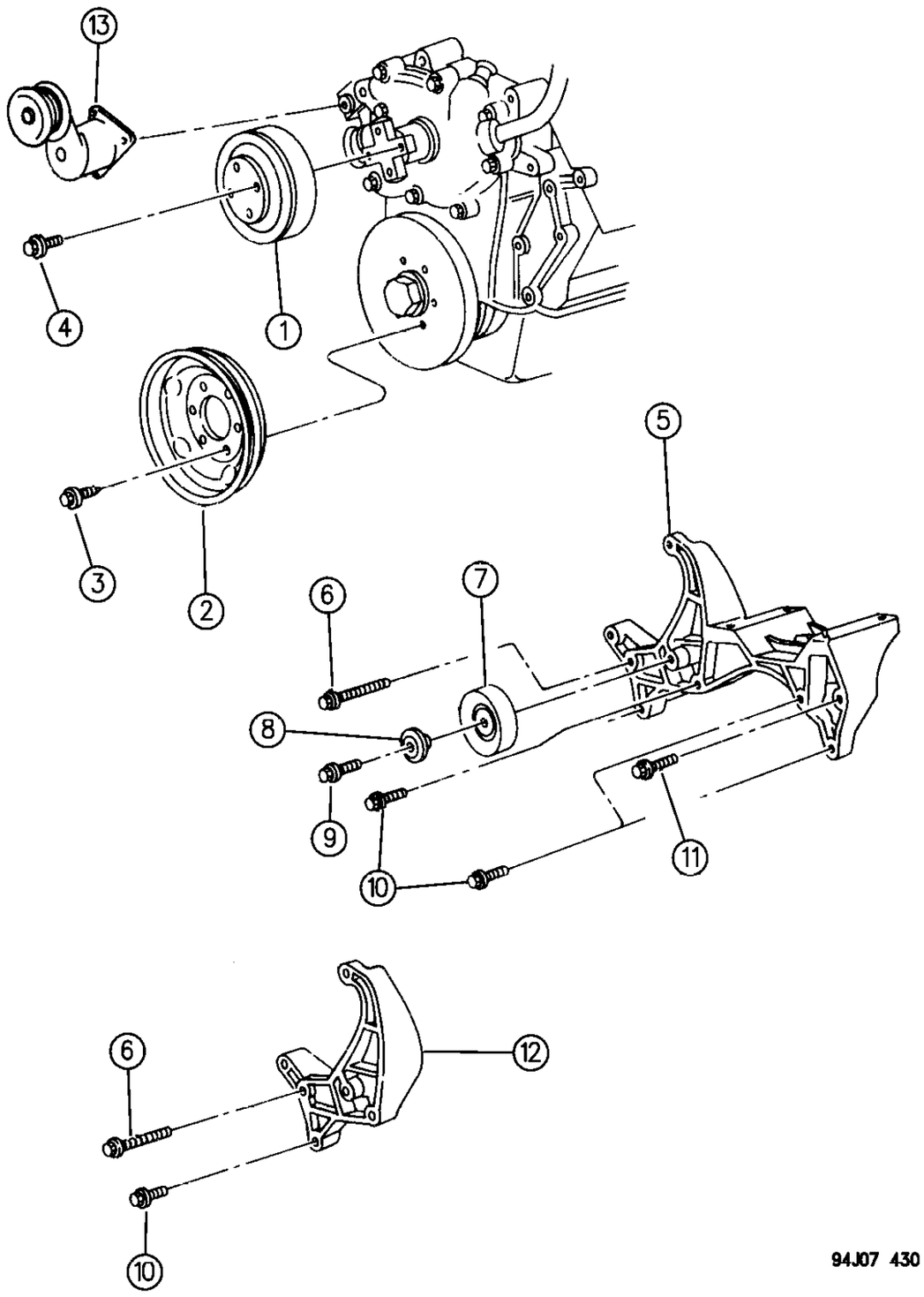

ITEM	PART NUMBER	QTY	BODY	MODEL	DESCRIPTION
1	5301 0221	1			PULLEY, Fan
2	5301 0222	1			PULLEY, Drive
3		6			SCREW (DNS)
4		4			SCREW (DNS)
5	5300 8614	1			BRACKET, Alternator and Compressor Mounting
6	6034 247	AR			BOLT
7	5300 9508	1			PULLEY, Idler
8	3300 2201	1			BUSHING
9					BOLT (DNS)
10					BOLT (DNS)
11	6034 246	1			BOLT
12	5300 8618	1			BRACKET, w/o A/C
13	5301 0158	1			TENSIONER, w/Bracket

MODEL CODES:

72=2 DR Wagon
74=4 DR Wagon
77=Open Body 93" Whlbase
78=Open Body 103" Whlbase - Export
T=2WD
J,N=4WD
U=4WD (RHD)

BODY STYLES:

YJ=Wrangler (4X4) "S"
Weangler (4X4) SE
Wrangler (4X4) Sahara
Wrangler (4X4) Renegade
XJ=Cherokee SE
Cherokee Sport
Cherokee Country
ZJ=Grand Cherokee SE
Grand Cherokee Laredo
Grand Cherolee Limited
ZG=Grand Cherokee European
Y1=Wrangler
X1=Cherokee
Z1=Grand Cherokee
KDX=Vehicles

AR = Use as Required - = Non Illustrated Part P.A.R. = Paint as Required

« RETURN TO GROUP INDEX

DRIVE PULLEYS 2.5 DIESEL ENGINE ZG BODY
Figure 7-440

7-440

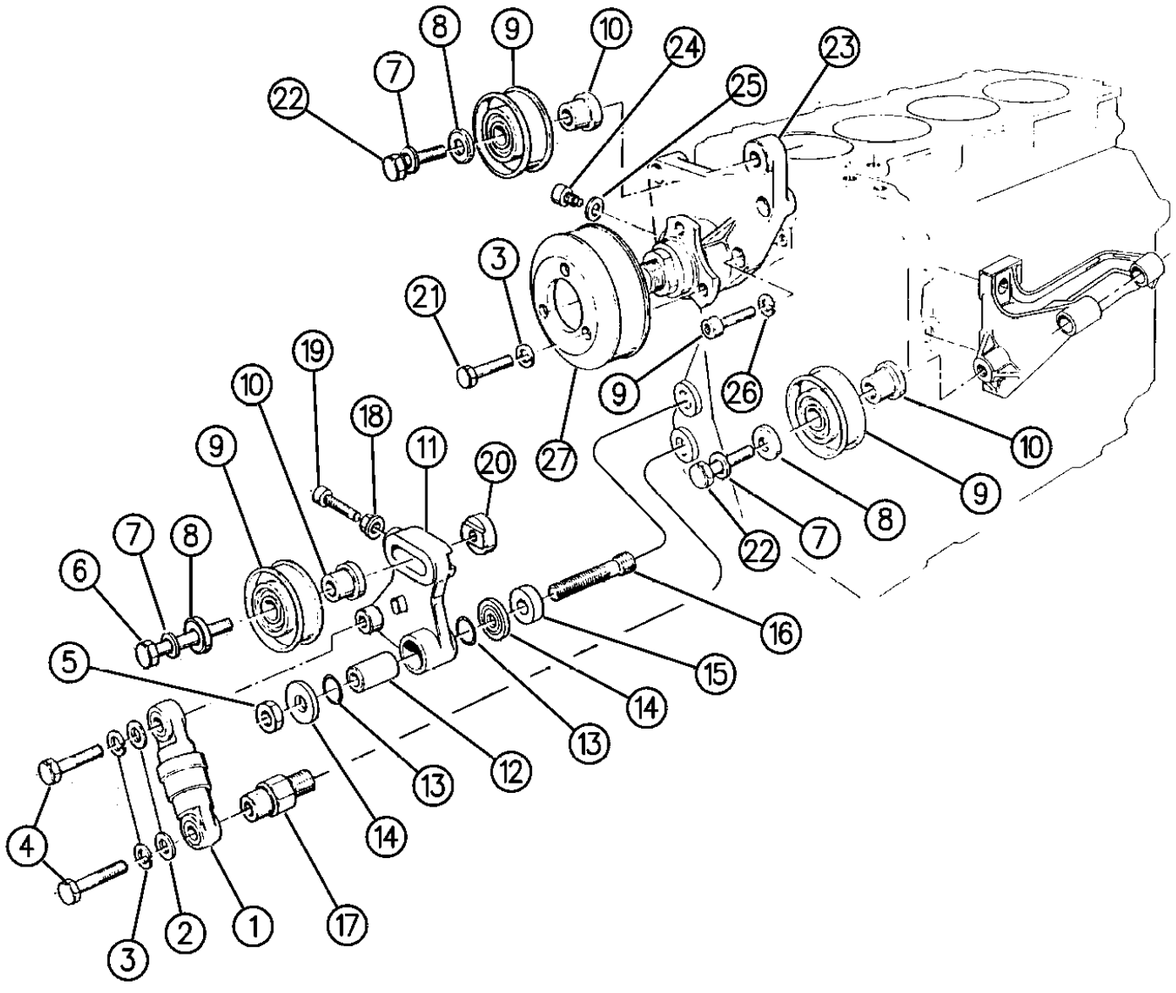

94J07 440

ITEM	PART NUMBER	QTY	BODY	MODEL	DESCRIPTION
1	4720 714	1			TENSIONER, Hydraulic
2	4720 193	2			WASHER
3	4723 165	5			WASHER
4	4723 199	2			BOLT
5	4723 271	1			NUT
6	4797 783	1			BOLT
7	4720 243	3			WASHER
8	4796 015	3			WASHER
9	4796 016	3			PULLEY Idler ***
10	4796 017	3			SHAFT, Idler Pulley
11	4796 018	1			BRACKET, Belt Tensioner
12	4728 197	1			TENSIONER, Shaft Belt
13	4728 198	2			O-RING
14	4728 200	2			SPACER
15	4796 019	1			SPACER
16	4796 020	1			STUD, Tensioner
17	4796 021	1			SPACER
18	4778 961	1			NUT
19	4797 772	1			SCREW (DNS)
20	4796 028	1			NUT
21	4723 164	3			BOLT
22	4797 773	2			BOLT
23	4796 029	1			BRACKET, Fan Support
24	4796 030	1			SCREW
25	4723 200	1			WASHER
26	4720 688	4			WASHER
27	4796 031	1			PULLEY, Fan Drive

MODEL CODES:

72=2 DR Wagon
74=4 DR Wagon
77=Open Body 93" Whlbase
78=Open Body 103" Whlbase - Export
T=2WD
J,N=4WD
U=4WD (RHD)

BODY STYLES:

YJ=Wrangler (4X4) "S"
Weangler (4X4) SE
Wrangler (4X4) Sahara
Wrangler (4X4) Renegade
XJ=Cherokee SE
Cherokee Sport
Cherokee Country
ZJ=Grand Cherokee SE
Grand Cherokee Laredo
Grand Cherolee Limited
ZG=Grand Cherokee European
Y1=Wrangler
X1=Cherokee
Z1=Grand Cherokee
KDX=Vehicles

AR = Use as Required - = Non Illustrated Part P.A.R. = Paint as Required

« RETURN TO GROUP INDEX

DRIVE BELTS YJ BODY
Figure 7-505

7–505

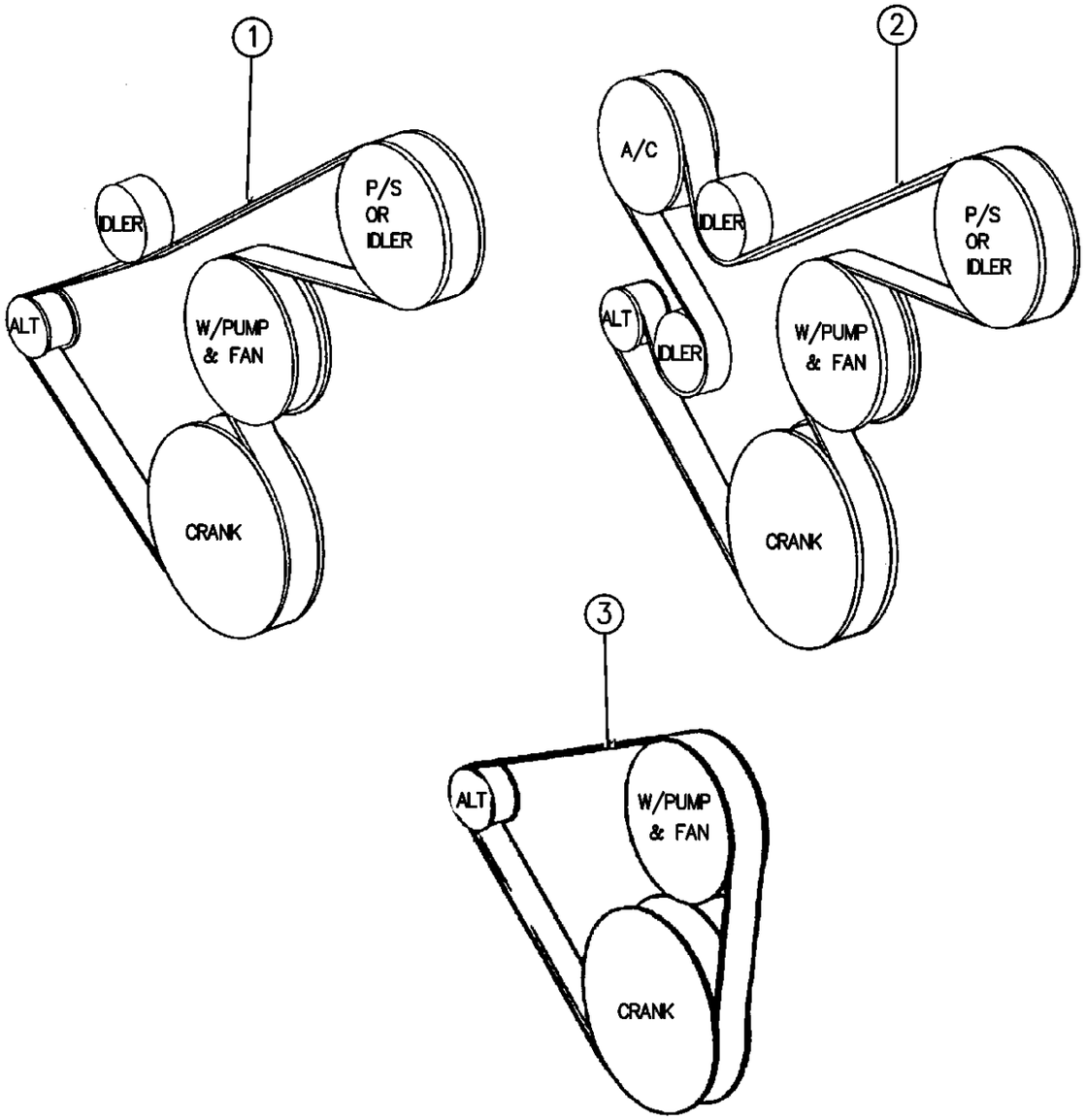

94J07 505

ITEM	PART NUMBER	QTY	BODY	MODEL	DESCRIPTION
1					BELT, Accessory Drive, w/o A/C, w/Power Streeing
	5301 0284	1			1994
	5303 1118	1			1995, Early Build, w/o A/Conditioning
	5301 0257	1			1995, w/o A/Conditioning
	5301 0294	1			RHD
2					BELT, Fan/Power Steering Drive
	5301 0276	1			w/A/C
	5300 8007	1			EGYPT
3	5301 0283	1			BELT, Fan, Manual Steering, w/o A/C

MODEL CODES:

72=2 DR Wagon
74=4 DR Wagon
77=Open Body 93" Whlbase
78=Open Body 103" Whlbase - Export
T=2WD
J,N=4WD
U=4WD (RHD)

BODY STYLES:

YJ=Wrangler (4X4) "S"
Weangler (4X4) SE
Wrangler (4X4) Sahara
Wrangler (4X4) Renegade
XJ=Cherokee SE
Cherokee Sport
Cherokee Country
ZJ=Grand Cherokee SE
Grand Cherokee Laredo
Grand Cherolee Limited
ZG=Grand Cherokee European
Y1=Wrangler
X1=Cherokee
Z1=Grand Cherokee
KDX=Vehicles

AR = Use as Required - = Non Illustrated Part P.A.R. = Paint as Required

DRIVE BELTS XJ BODY
Figure 7-510

7-510

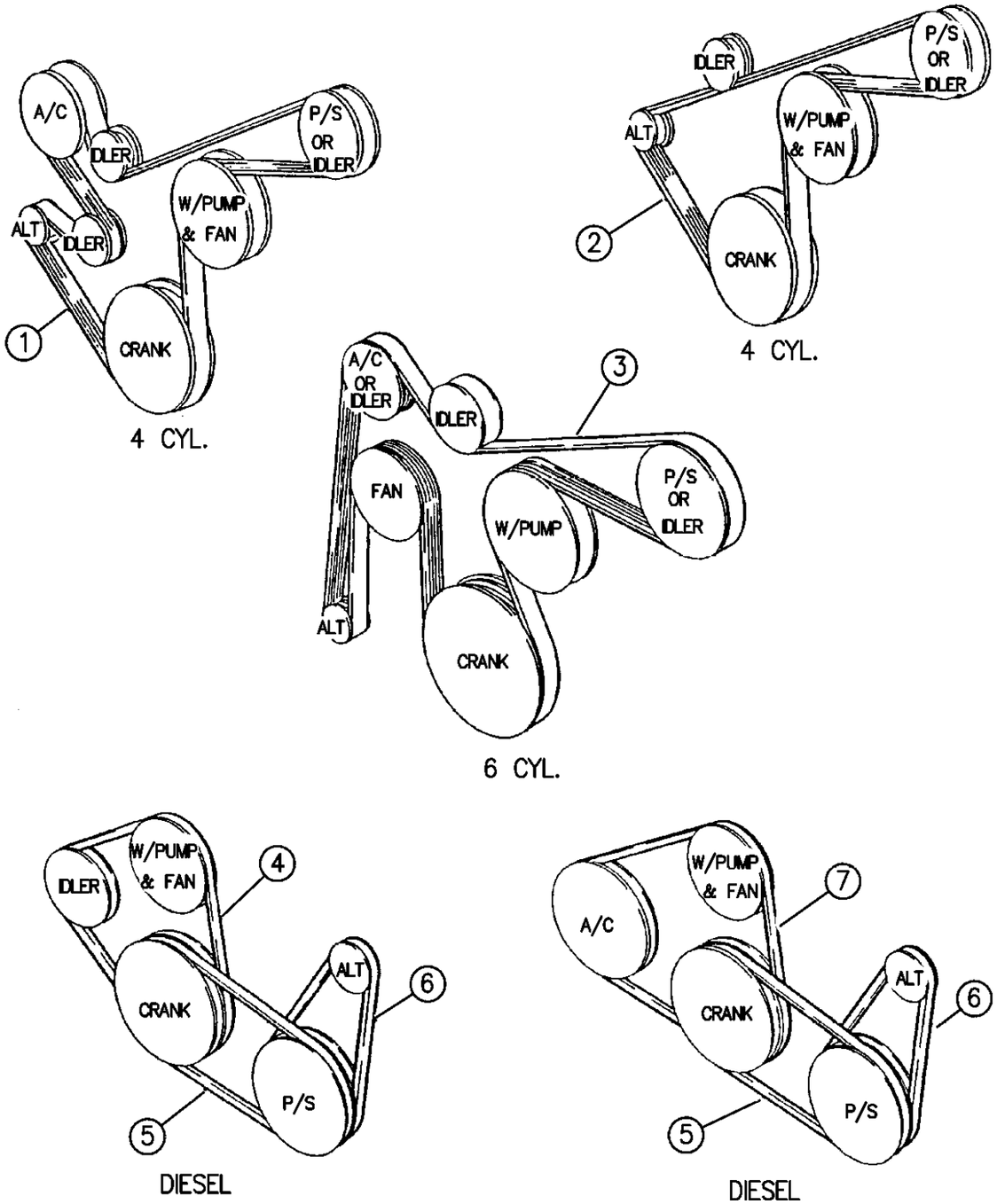

94J07 510

ITEM	PART NUMBER	QTY	BODY	MODEL	DESCRIPTION
1					BELT, Serpentine, 2.5L Engine
	5301 0276	1			1994-95
	5301 1035	1			1996
	5301 0288	1			RHD
					2.5L Diesel Engine
	4796 033	1			1995
	4864 599	1			1996
2					BELT, w/o A/C, 2.5L Engine
	5303 1118	1			1994-95
	5301 0311	1			1996
3	5301 0269	1			BELT, Serpentine (4.0L Engine)
	5301 0269	1			1994-95
	5301 0314	1			1996
	5301 0279	1			RHD, 1994-95
	5301 0234	1			RHD, 1996
4	5300 1772	1			BELT, Fan and Idler Pulley, Diesel Engine
5	5300 1773	1			BELT, Power Steering Drive, Diesel Engine
6	5300 1774	1			BELT, Alternator Drive, Diesel Engine
7	5300 2341	1			BELT, Compressor Drive, Diesel Engine
					LABEL, Belt Routing
	5301 0059	1			RHD, China
	5304 0078	1			2.5 Diesel
	5301 0058	1			RHD, 4.0L Engine 1994-96
	5301 0297	1			RHD, 4.0L Engine 1996
	5300 6399	1			4.0L Engine 1994-95
	5301 0299	1			4.0L Engine 1996

MODEL CODES:

72=2 DR Wagon
74=4 DR Wagon
77=Open Body 93" Whlbase
78=Open Body 103" Whlbase - Export
T=2WD
J,N=4WD
U=4WD (RHD)

BODY STYLES:

YJ=Wrangler (4X4) "S"
Weangler (4X4) SE
Wrangler (4X4) Sahara
Wrangler (4X4) Renegade
XJ=Cherokee SE
Cherokee Sport
Cherokee Country
ZJ=Grand Cherokee SE
Grand Cherokee Laredo
Grand Cherolee Limited
ZG=Grand Cherokee European
Y1=Wrangler
X1=Cherokee
Z1=Grand Cherokee
KDX=Vehicles

AR = Use as Required - = Non Illustrated Part P.A.R. = Paint as Required

« RETURN TO GROUP INDEX

DRIVE BELT ZJ, ZG BODY
Figure 7-520

7-520A

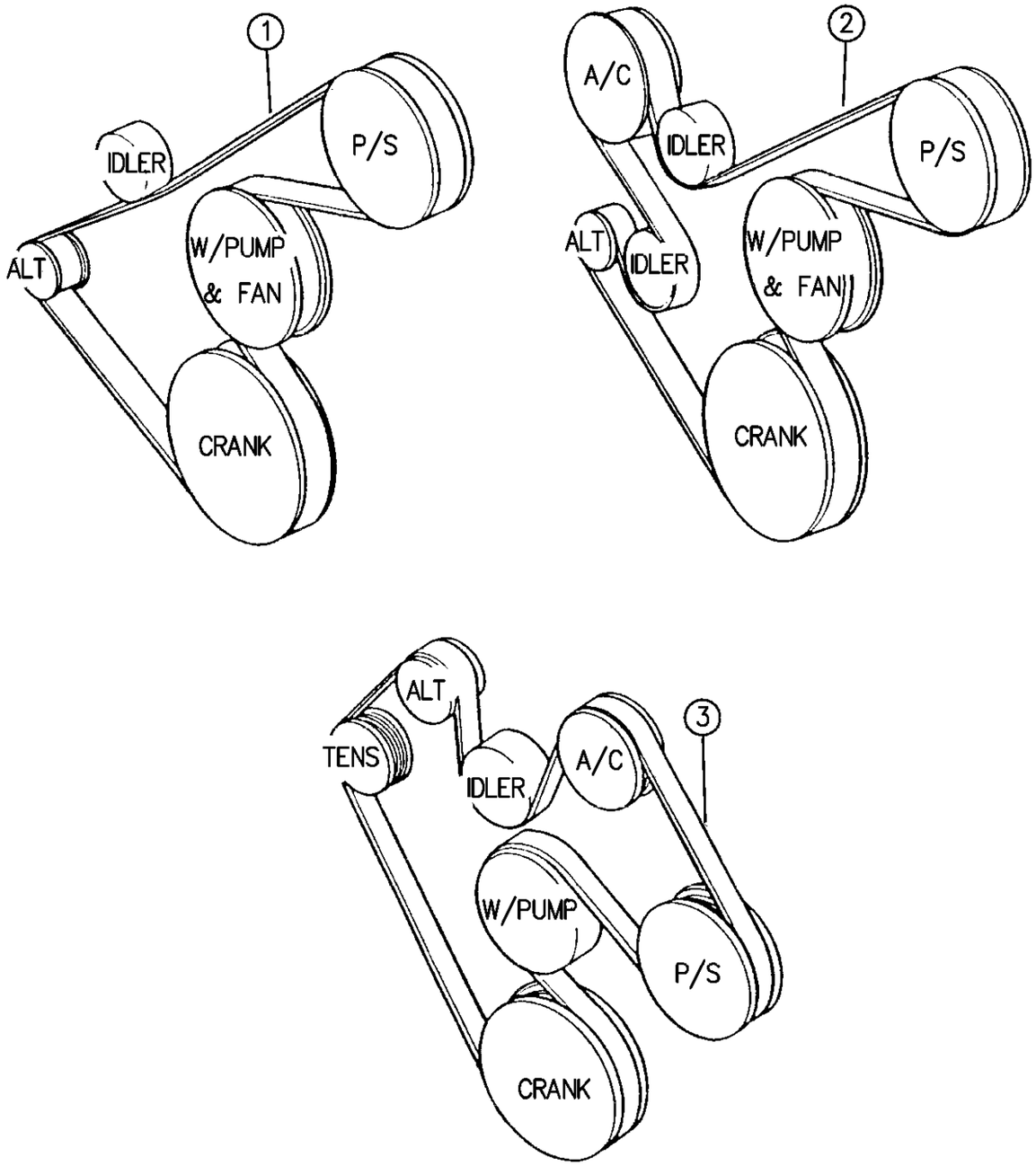

94J07 520

ITEM	PART NUMBER	QTY	BODY	MODEL	DESCRIPTION
1	5301 0284	1			BELT, Drive, 4.0L Eng., w/o A/C
2					BELT, Drive, 4.0L Eng., w/A/C
	5301 0275	1			1994-95
	5301 0150	1			1996
	5305 4339	1	ZG		w/136 Amp. Alternator RHD
	5305 4449	1	ZG		w/117 Amp. Alternator RHD
3					BELT, Drive, 5.2L Eng.
	5301 0289	1			1994
	5301 1098	1			1995
	5301 1097	1			1996
					2.5L Diesel Engine
	4797 801	1			
	4864 599	1			1996

MODEL CODES:

72=2 DR Wagon
74=4 DR Wagon
77=Open Body 93" Whlbase
78=Open Body 103" Whlbase - Export
T=2WD
J,N=4WD
U=4WD (RHD)

BODY STYLES:

YJ=Wrangler (4X4) "S"
Weangler (4X4) SE
Wrangler (4X4) Sahara
Wrangler (4X4) Renegade

XJ=Cherokee SE
Cherokee Sport
Cherokee Country

ZJ=Grand Cherokee SE
Grand Cherokee Laredo
Grand Cherolee Limited
ZG=Grand Cherokee European

Y1=Wrangler
X1=Cherokee
Z1=Grand Cherokee
KDX=Vehicles

AR = Use as Required - = Non Illustrated Part P.A.R. = Paint as Required

OIL COOLER LINES AUTOMATIC TRANSMISSION YJ BODY
Figure 7-605

7-605A

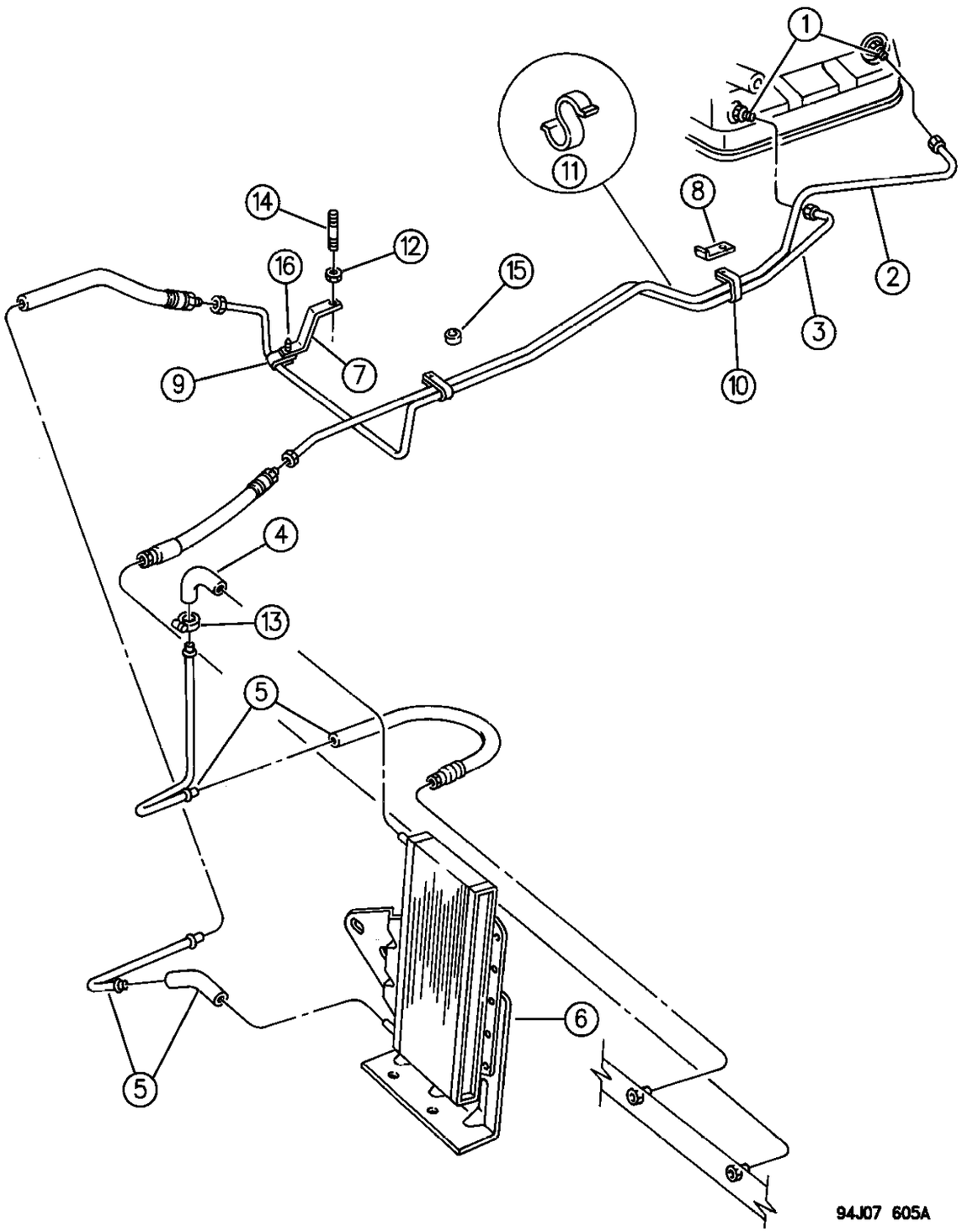

ITEM	PART NUMBER	QTY	BODY	MODEL	DESCRIPTION
1	4617 517	2			CONNECTOR, Quick
2					TUBE, w/Hose, Return
	5211 7895	1			2.5L Engine
	5211 8001	1			4.0L Engine
	5211 8299	2			CONNECTOR, Quick Connect
3					TUBE, w/Hose, Pressure
	5211 7996	1			2.5L Engine
	5211 7885	1			4.0L Engine
	5211 7775	1			BRACKET, Oil Cooler Tube Support
4	5202 7684	1			ELBOW
5					HOSE, w/Tube, Serviced in Cooler Assembly
6	5202 8165	1			COOLER, Aux. Trans.
-	5211 7712	1			CONNECTOR, To Cooler
7	5211 7836	1			CLAMP
8	5211 7835	1			CLAMP
9	0120 523	1			CLIP
10		2			CLIP, Tube (DNS)
11		2			CLIP, "S" Type (DNS)
12	6033 560	2			NUT
13		2			CLAMP, Hose (DNS)
14	J400 7612	2			STUD
15	J066 9842	2			SPACER
16		2			SCREW (DNS)

MODEL CODES:

72=2 DR Wagon
74=4 DR Wagon
77=Open Body 93" Whlbase
78=Open Body 103" Whlbase - Export
T=2WD
J,N=4WD
U=4WD (RHD)

BODY STYLES:

YJ=Wrangler (4X4) "S"
Weangler (4X4) SE
Wrangler (4X4) Sahara
Wrangler (4X4) Renegade
XJ=Cherokee SE
Cherokee Sport
Cherokee Country
ZJ=Grand Cherokee SE
Grand Cherokee Laredo
Grand Cherolee Limited
ZG=Grand Cherokee European
Y1=Wrangler
X1=Cherokee
Z1=Grand Cherokee
KDX=Vehicles

AR = Use as Required - = Non Illustrated Part P.A.R. = Paint as Required

« RETURN TO GROUP INDEX

OIL COOLER AND LINES 5.2 ENGINE ZJ, ZG BODY
Figure 7-610

7-610A

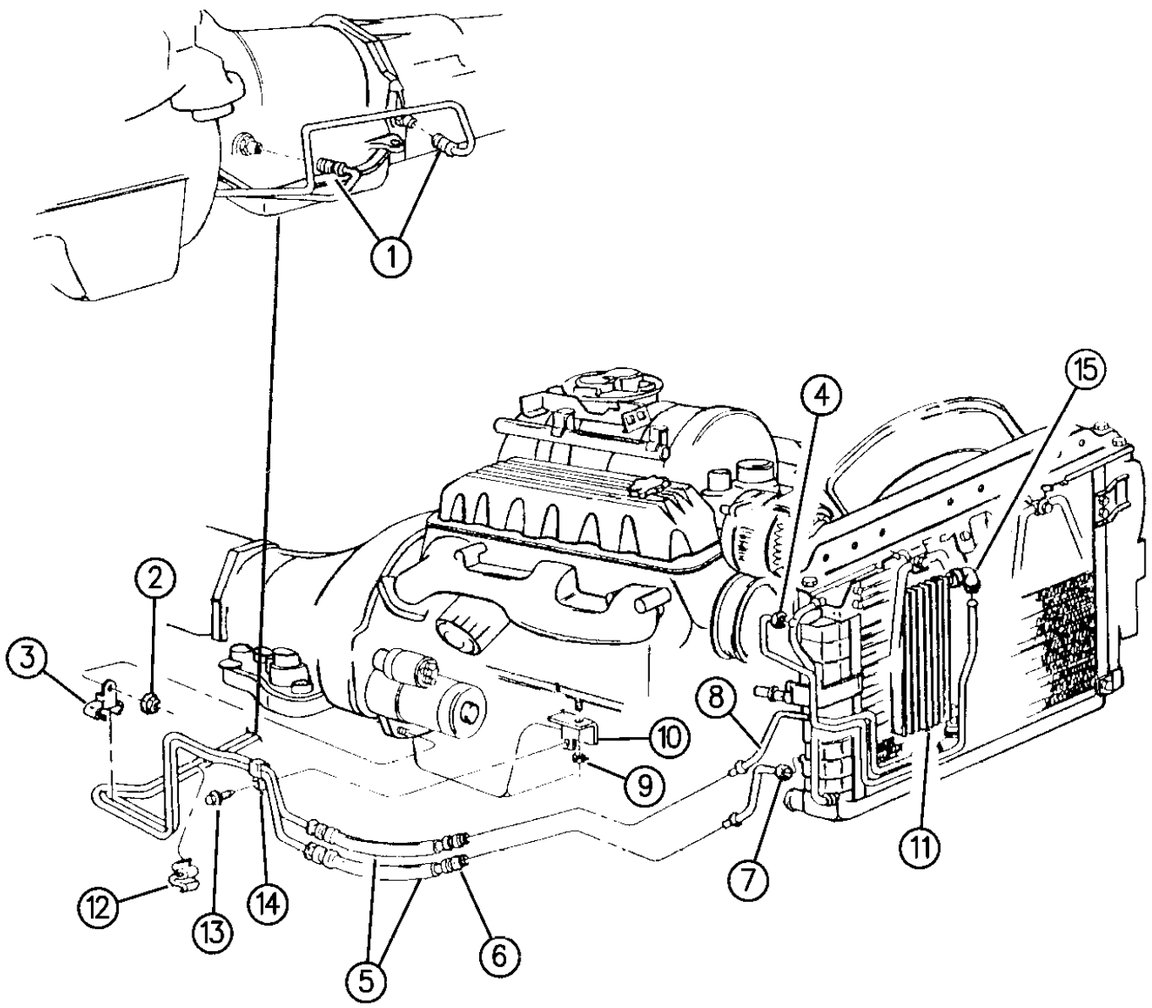

94J07 610

ITEM	PART NUMBER	QTY	BODY	MODEL	DESCRIPTION
1					TUBE, w/Hose, Cooler
	4617 995	1			Pressure, 1994-95
	4617 976	1			Return, 1994-95
	5207 9399	1			Pressure, 1996
	5207 9459	1			Return, 1996
	6032 839	4			CLAMP, Aux. Trans. Cooler MID-EAST
	4617 517	2			CONNECTOR, Quick Disconnect
2	1150 2813	1			NUT
3	5211 7575	1			BRACKET, Cooler Line Mounting
4					TUBE, Aux. Cooler, Pressure
	5202 7870	1			1994-95
	5207 9590	1			1996
5		1			HOSE, Cooler Line, Order #1
6	5211 7712	2			CONNECTOR, Quick Disconnect
7					TUBE ASSEMBLY, Cooler, Pressure ***
	5202 7867	1			1994-95
	5202 8391	1			1996
8	5202 7869	1			TUBE, Aux. Cooler, Return
9		1			NUT (Not Serviced)
10	5211 7711	1			BRACKET, Line Mounting, Right
11	5200 6344	1			COOLER, Aux. Oil
	4734 102	2			WASHER, Cooler Att.
12		1			CLIP, "S" Type (DNS)
13	3420 1707	1			SCREW
14		1			CLIP, Wrap Around (DNS)
15	5202 7684	1			ELBOW, Cooler Line

MODEL CODES:

72=2 DR Wagon
74=4 DR Wagon
77=Open Body 93" Whlbase
78=Open Body 103" Whlbase - Export
T=2WD
J,N=4WD
U=4WD (RHD)

BODY STYLES:

YJ=Wrangler (4X4) "S"
Weangler (4X4) SE
Wrangler (4X4) Sahara
Wrangler (4X4) Renegade
XJ=Cherokee SE
Cherokee Sport
Cherokee Country
ZJ=Grand Cherokee SE
Grand Cherokee Laredo
Grand Cherolee Limited
ZG=Grand Cherokee European
Y1=Wrangler
X1=Cherokee
Z1=Grand Cherokee
KDX=Vehicles

AR = Use as Required - = Non Illustrated Part P.A.R. = Paint as Required

« RETURN TO GROUP INDEX

OIL COOLER AND LINES 4.0 ENGINE ZJ, ZG BODY
Figure 7-620

7-620C

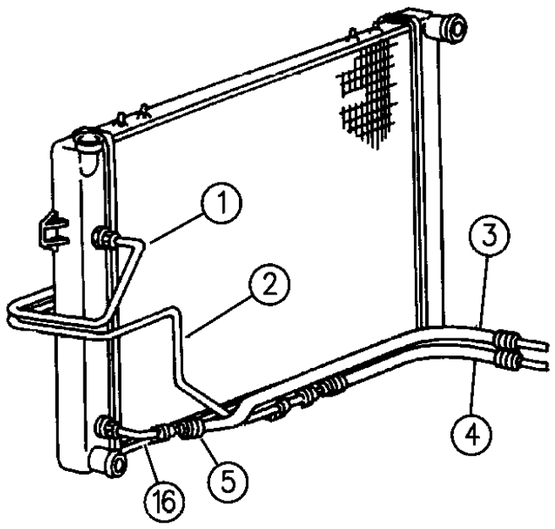

W/AUX COOLER

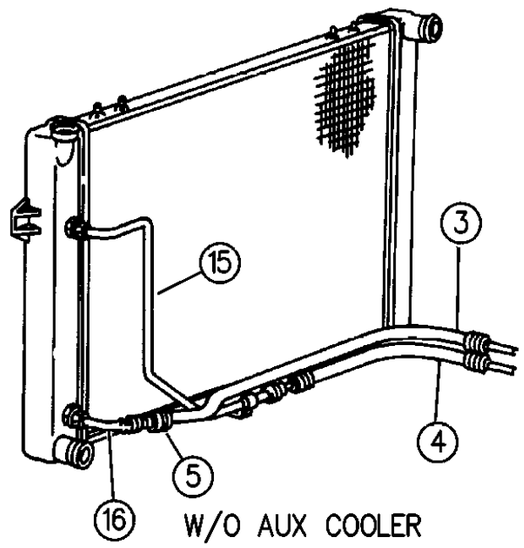

W/O AUX COOLER

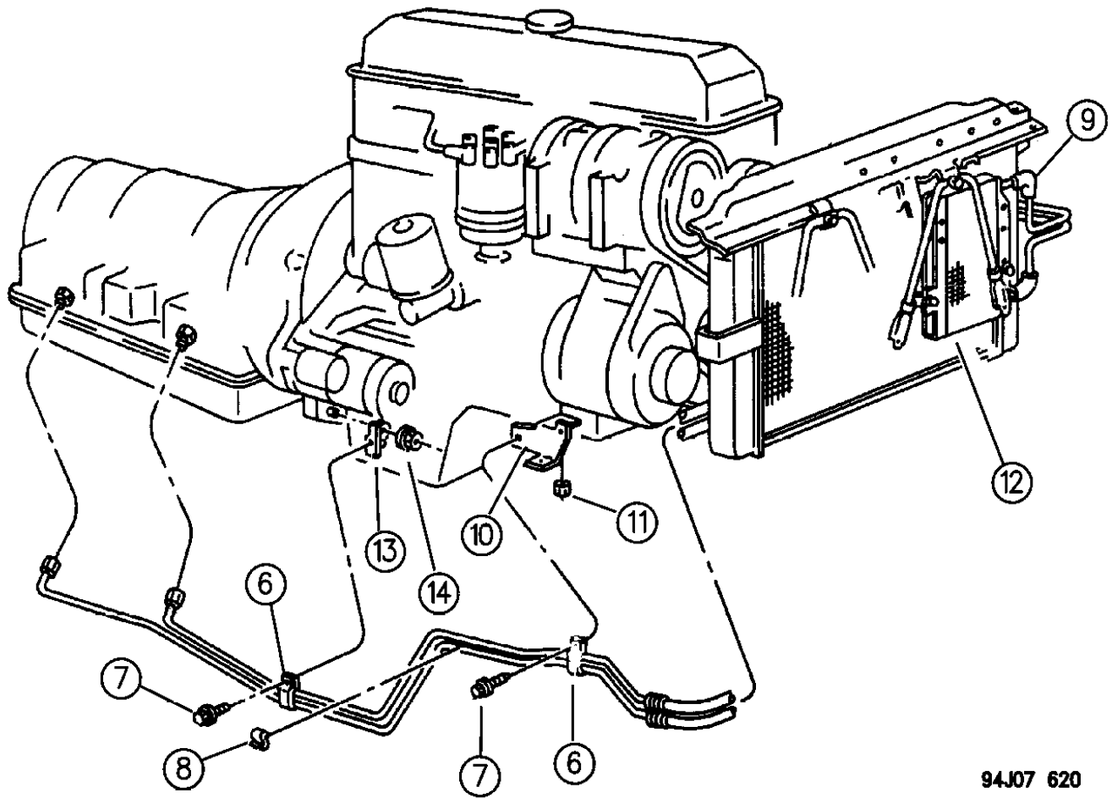

ITEM	PART NUMBER	QTY	BODY	MODEL	DESCRIPTION
1		1			TUBE, Oil Cooler Pressure
	5202 7677	1			1994-95
	5207 9588	1			1996
2					TUBE, Oil Cooler Return
	5202 7675	1			1994-95 (Lower Line)
	5207 9589	1			1996
3					TUBE, w/Hose, Pressure
	5202 8602	1			1994-95
	5207 9398	1			1996, Pressure and Pressure
	5305 4553	1	ZG		1996 (RHD)
4					TUBE, w/Hose, Return
	4617 974	1			1994-95
	5207 9398	1			1996, Pressure and Return
	5305 4554	1	ZG		1996 (RHD)
5	5211 7712	2			CONNECTOR, Automatic Trans. Cooler Lines
	5305 4454	1	ZG		1996 (RHD)
	5202 7775	1			CLIP, Tube Attaching
	4762 278	2			HOSE, Aux. Trans., MID-EAST
6		2			CLIP (DNS)
7	3420 1707	2			SCREW
8	5211 7919	1			CLIP
9	5202 7684	2			ELBOW, Oil Cooler
	3300 0785	4			CLAMP, Elbow
10	5211 7711	1			BRACKET, Cooler Lines
11		1			NUT (DNS) ***
12					COOLER, Aux. Trans.
	5202 7796	1			1994-96
	5202 8797	1	ZG		1996
	1150 2843	2			SCREW, Oil Cooler Mounting
	4734 102	2			WASHER, Cooler Att.
	J400 4555	2			CLIP, Wrap Around, Cooler Att.
	4762 286	1			BRACKET, Aux. Trans. Cooler, Upper MID-EAST
	4762 288	1			BRACKET, Aux. Trans. Cooler, Lower MID-EAST
13					BRACKET, Tube Clip Support
	5300 7598	1			1994-95
	5211 8067	1			1996
14	1150 2813	1			NUT
15	5202 7674	1			TUBE, Oil Cooler
16		1			TUBE, Serviced in Radiator

MODEL CODES:

72=2 DR Wagon
74=4 DR Wagon
77=Open Body 93" Whlbase
78=Open Body 103" Whlbase - Export
T=2WD
J,N=4WD
U=4WD (RHD)

BODY STYLES:

YJ=Wrangler (4X4) "S"
Weangler (4X4) SE
Wrangler (4X4) Sahara
Wrangler (4X4) Renegade
XJ=Cherokee SE
Cherokee Sport
Cherokee Country
ZJ=Grand Cherokee SE
Grand Cherokee Laredo
Grand Cherolee Limited
ZG=Grand Cherokee European
Y1=Wrangler
X1=Cherokee
Z1=Grand Cherokee
KDX=Vehicles

AR = Use as Required - = Non Illustrated Part P.A.R. = Paint as Required

OIL COOLER AND LINES AUTOMATIC TRANSMISSION XJ BODY
Figure 7-630

7-630

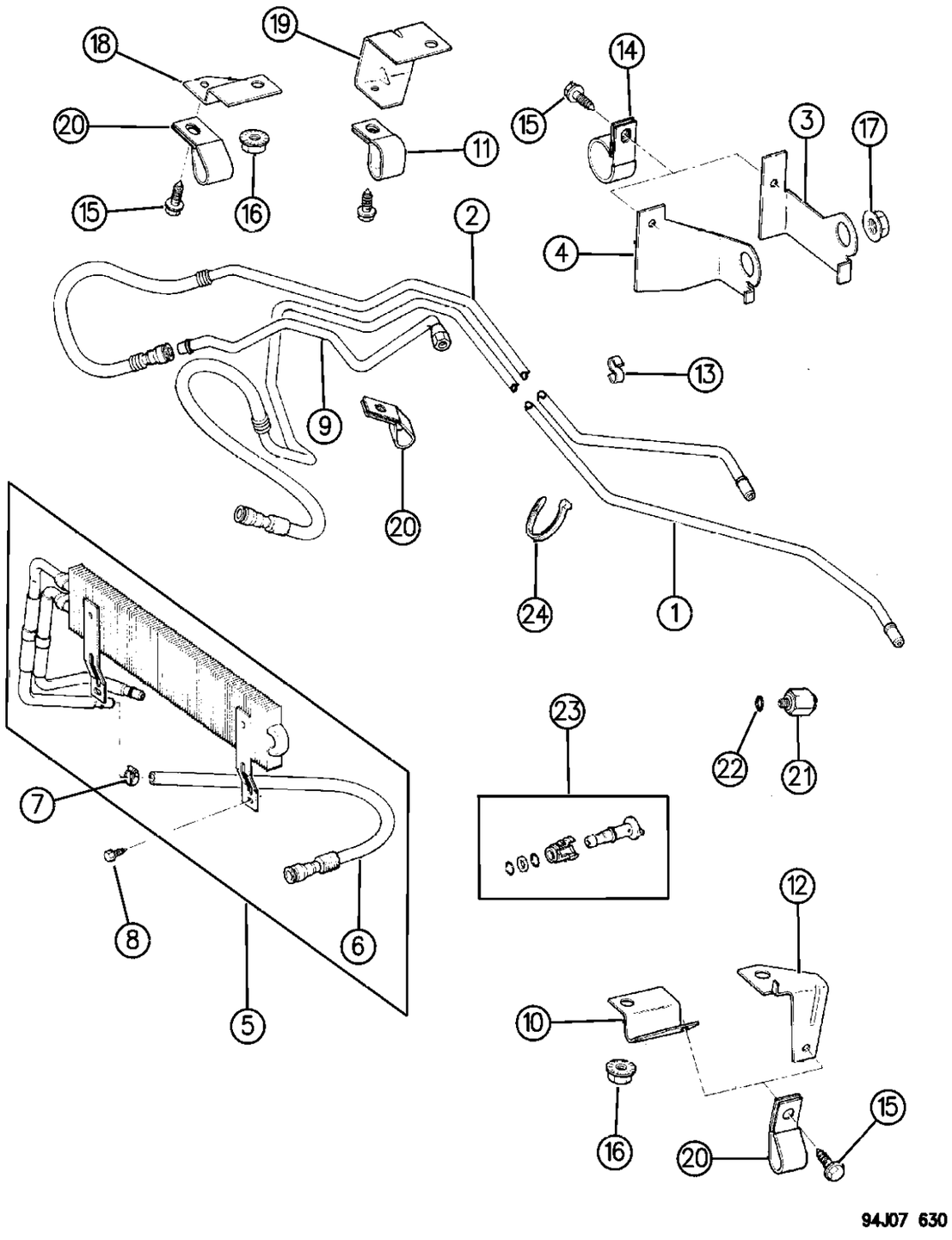

ITEM	PART NUMBER	QTY	BODY	MODEL	DESCRIPTION
1	5211 7847	1			TUBE, Supply, 2.5L Engine
	5300 4531	1			TUBE, Return, 4.0L Engine
	5211 7552	1			RHD
2	5211 7833	1			TUBE, Return, 2.5L Engine
	5300 4530	1			TUBE, Supply, 4.0L Engine
	5202 8246	1			RHD
3	5300 4696	1			BRACKET, Tube Clip Support, 2.5L Engine
4	5300 4631	1			BRACKET, Tube Clip Mtg., 4.0L Engine
5					COOLER, Auxiliary Oil
	5211 7951	1			2.5L Engine
	5202 8802	1			2.5L Engine, H/Duty
	4863 838	1			2,5L Diesel Engine
	4617 948	1			4.0L Engine
	5202 8508	1			EXPORT
	5211 8000	1			RHD
6					HOSE, 4.0L Engine
	5211 8440	1			LHD
	5211 7785	1			RHD
7	J320 3076	1			CLAMP, 4.0L Engine
8	1150 2843	2			SCREW, 4.0L Engine
9					TUBE, Oil Cooler
	5300 5224	1			LHD
	5211 8100	1			RHD, 1994
	5202 8310	1			RHD, 1995-96
	5300 7599	2			CONNECTOR, Automatic Trans. Cooler
10	5300 4992	1			BRACKET, 2.5L Engine
11	3420 2698	2			CLIP, 4.0L Engine
12	5300 4989	1			BRACKET, 4.0L Engine
13	J400 0021	2			CLIP "S" ***
14	J400 1717	1			CLIP
15	J942 1073	AR			SCREW
16	S027 3801	2			NUT
17	1150 2813	1			NUT
18	5300 4991	1			BRACKET, 2.5L Engine
19	5300 4990	1			BRACKET, 4.0L Engine
20	3420 2697	2			CLIP
21	8350 3728	2			UNION
22	8350 3727	2			O-RING
23	8350 4447	AR			PACKAGE, Oil Cooler Lines Connect Repair, 1994-95
	5202 8470	AR			CONNECTOR, Quick Connect, 1996
24					STRAP
	3420 1788	AR			Wiring

MODEL CODES:

72=2 DR Wagon
74=4 DR Wagon
77=Open Body 93" Whlbase
78=Open Body 103" Whlbase - Export
T=2WD
J,N=4WD
U=4WD (RHD)

BODY STYLES:

YJ=Wrangler (4X4) "S"
Weangler (4X4) SE
Wrangler (4X4) Sahara
Wrangler (4X4) Renegade
XJ=Cherokee SE
Cherokee Sport
Cherokee Country
ZJ=Grand Cherokee SE
Grand Cherokee Laredo
Grand Cherolee Limited
ZG=Grand Cherokee European
Y1=Wrangler
X1=Cherokee
Z1=Grand Cherokee
KDX=Vehicles

AR = Use as Required - = Non Illustrated Part P.A.R. = Paint as Required

OIL COOLER AND LINES AUTOMATIC TRANSMISSION XJ BODY
Figure 7-630

7-630

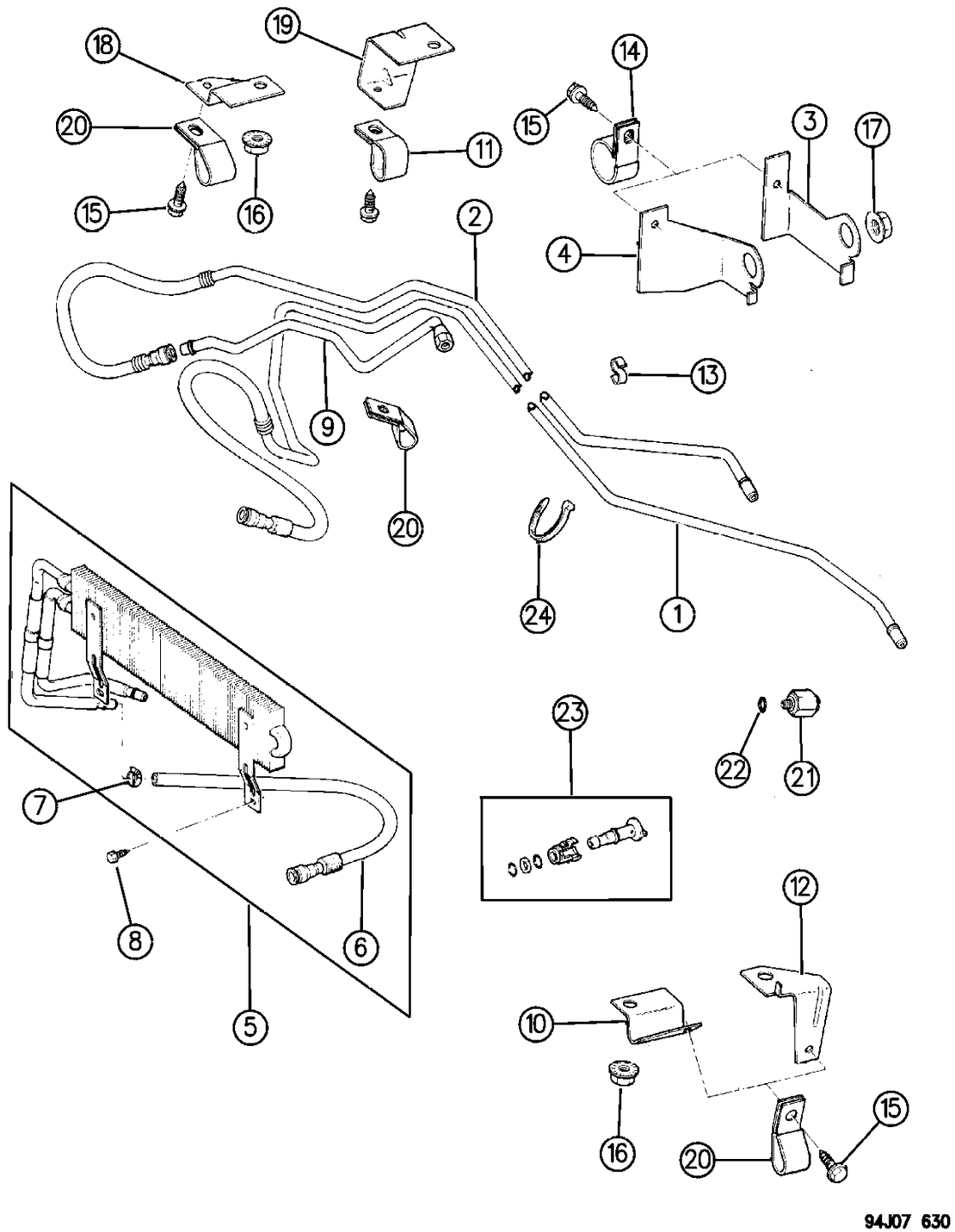

ITEM	PART NUMBER	QTY	BODY	MODEL	DESCRIPTION
	J324 1515	AR			Supply to Return Lines

MODEL CODES:

72=2 DR Wagon	77=Open Body 93" Whlbase	T=2WD	U=4WD (RHD)
74=4 DR Wagon	78=Open Body 103" Whlbase - Export	J,N=4WD	

BODY STYLES:

YJ=Wrangler (4X4) "S"	XJ=Cherokee SE	ZJ=Grand Cherokee SE	Y1=Wrangler
Weangler (4X4) SE	Cherokee Sport	Grand Cherokee Laredo	X1=Cherokee
Wrangler (4X4) Sahara	Cherokee Country	Grand Cherolee Limited	Z1=Grand Cherokee
Wrangler (4X4) Renegade		ZG=Grand Cherokee European	KDX=Vehicles

AR = Use as Required - = Non Illustrated Part P.A.R. = Paint as Required

GRILLE AND RELATED PARTS YJ BODY
Figure 7-705

7–705B

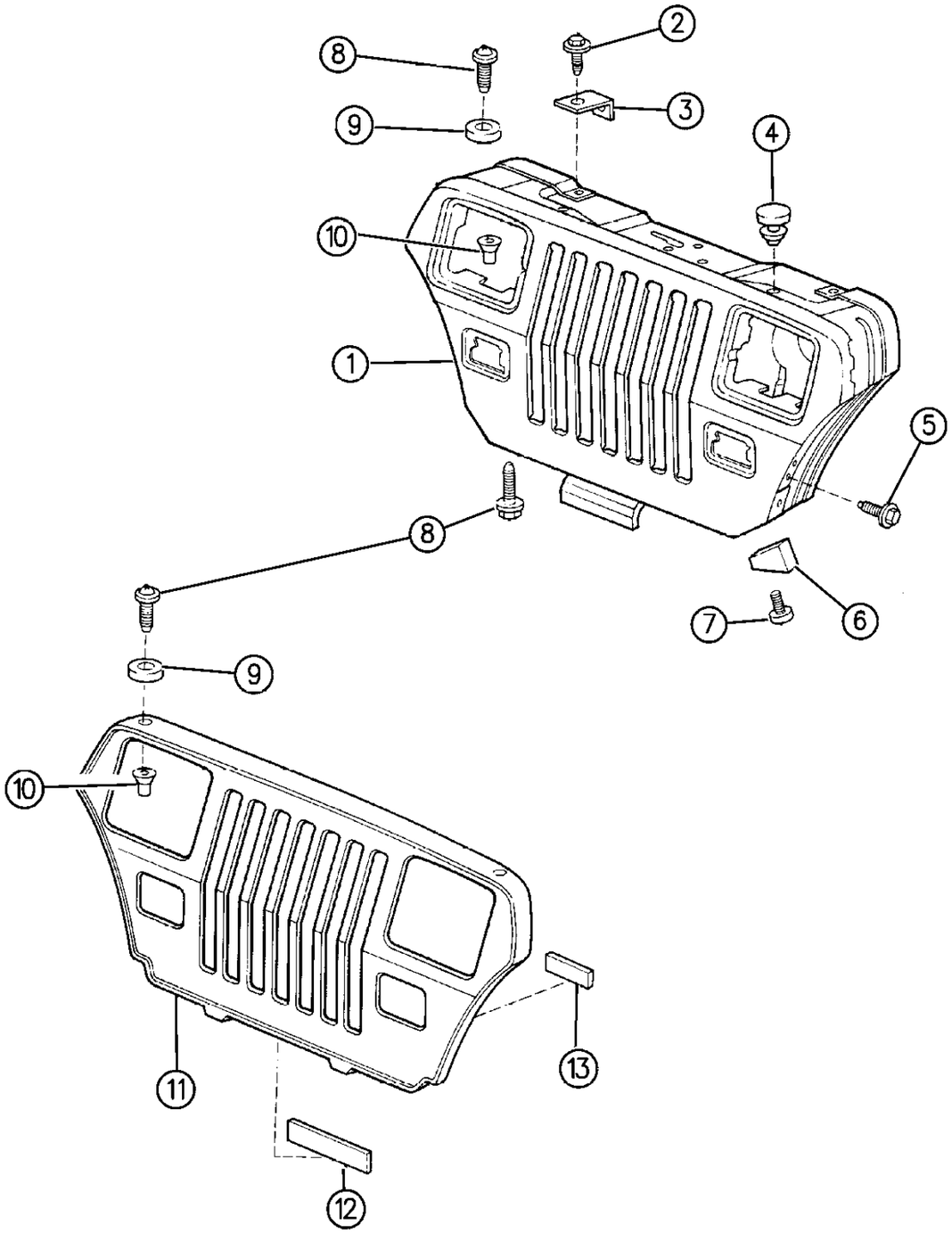

ITEM	PART NUMBER	QTY	BODY	MODEL	DESCRIPTION
1	5534 5192	1			GRILLE, Radiator
-	J097 1672	AR			WASHER, Grille Mounting
-	J097 1669	AR			FASTNER, Grille Mounting ***
-	J097 2278	AR			WASHER, Grille Mounting
-	J400 7412	AR			SCREW, Grille Mounting
	5534 6030	1			BRACKET, Radiator Guard Hold Down
2	J400 5063	2			SCREW
3	5505 0145	2			BRACKET, Mounting
4	J400 7504	4			BUMPER, Hood
	J096 8072	AR			VENEZEULA, EGYPT
5	J400 4455	AR			SCREW
6	5501 0844	2			CUSHION
7	J400 7355	2			SCREW
8	6034 205	6			SCREW
9	J400 7503	AR			BUMPER, Steel Insert to Grille
10	J400 5237	6			NUT
11	5502 6587	1			APPLIQUE, Radiator, Chrome
12	8350 4565	1			TAPE
13					TAPE (DNS)

MODEL CODES:

72=2 DR Wagon
74=4 DR Wagon
77=Open Body 93" Whlbase
78=Open Body 103" Whlbase - Export
T=2WD
J,N=4WD
U=4WD (RHD)

BODY STYLES:

YJ=Wrangler (4X4) "S"
Weangler (4X4) SE
Wrangler (4X4) Sahara
Wrangler (4X4) Renegade
XJ=Cherokee SE
Cherokee Sport
Cherokee Country
ZJ=Grand Cherokee SE
Grand Cherokee Laredo
Grand Cherolee Limited
ZG=Grand Cherokee European
Y1=Wrangler
X1=Cherokee
Z1=Grand Cherokee
KDX=Vehicles

AR = Use as Required - = Non Illustrated Part P.A.R. = Paint as Required

GRILLE AND RELATED PARTS XJ BODY
Figure 7-710

7-710A

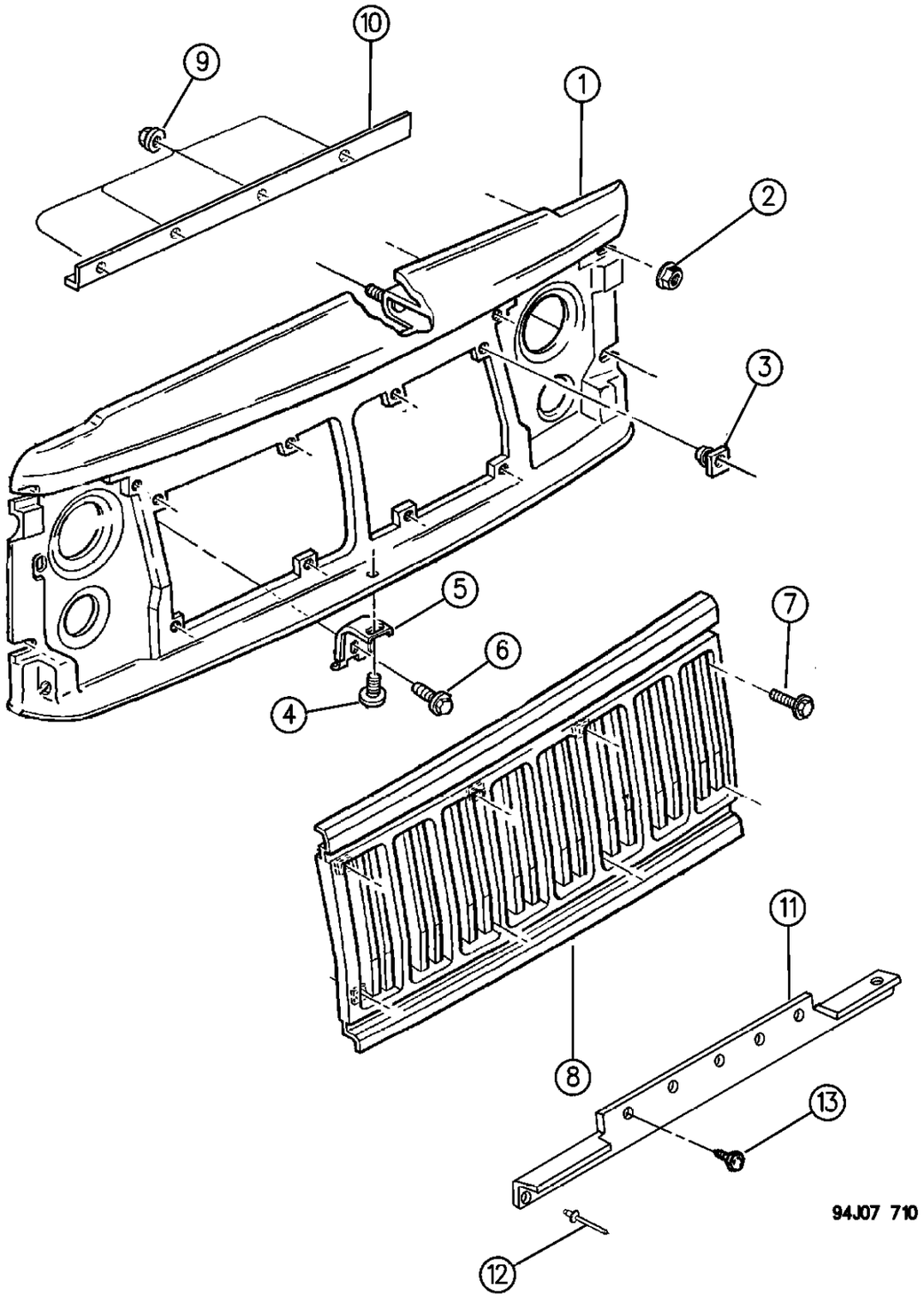

ITEM	PART NUMBER	QTY	BODY	MODEL	DESCRIPTION
1	5529 4926	1			PANEL, Grille Opening
2	3420 1874	4			NUT
3	J400 4689	8			NUT, Push
4	3420 2323	1			SCREW
5	5500 9473	1			BRACKET, Grille Opening Panel, Lower
6					SCREW (DNS)
7	6034 204	8			SCREW
8					GRILLE, Radiator, w/Mouldings
	5505 4945	1			Black/Black
	5503 4046	1			Black/Bright
NOTE: The following Grilles are Black with body color indicated.					
	5DW0 1PW7	1			White
	5DW0 1SW1	1			White, 1996
	5DW0 1PX8	1			Black
	5DW0 1PS7	1			Silver Metallic
	5DW0 1PCJ	1			Dark Montego Blue
	5DW0 1PR4	1			Graphic Red
	5DW0 1PQ2	1			Turquoise Met.
	5DW0 1PG5	1			Hunter Green Metallic
	5DW0 1PV4	1			Light Champagne
	5DW0 1RGF	1			Emerald Green
	5DW0 1RJN	1			Moss Green
	5DW0 1RQE	1			Aqua
	5DW0 1SQP	1			Aqua, 1996
	5DW0 1RV1	1			Pearlstone
9	6100 047	4			NUT
10	5501 0074	1			BRACKET
11					DEFLECTOR, Air, Front, Lower ***
	5AH0 8JX9	1			1994-95
	5EV2 4SX9	1			1996
12					RIVET, Blind
	6500 911	4			Black
	3420 1835	4			Grey
13					SCREW (DNS)

MODEL CODES:

72=2 DR Wagon
74=4 DR Wagon
77=Open Body 93" Whlbase
78=Open Body 103" Whlbase - Export
T=2WD
J,N=4WD
U=4WD (RHD)

BODY STYLES:

YJ=Wrangler (4X4) "S"
Weangler (4X4) SE
Wrangler (4X4) Sahara
Wrangler (4X4) Renegade
XJ=Cherokee SE
Cherokee Sport
Cherokee Country
ZJ=Grand Cherokee SE
Grand Cherokee Laredo
Grand Cherolee Limited
ZG=Grand Cherokee European
Y1=Wrangler
X1=Cherokee
Z1=Grand Cherokee
KDX=Vehicles

AR = Use as Required - = Non Illustrated Part P.A.R. = Paint as Required

« RETURN TO GROUP INDEX

GRILLE AND RELATED PARTS ZJ, ZG BODY
Figure 7-720

7-720A

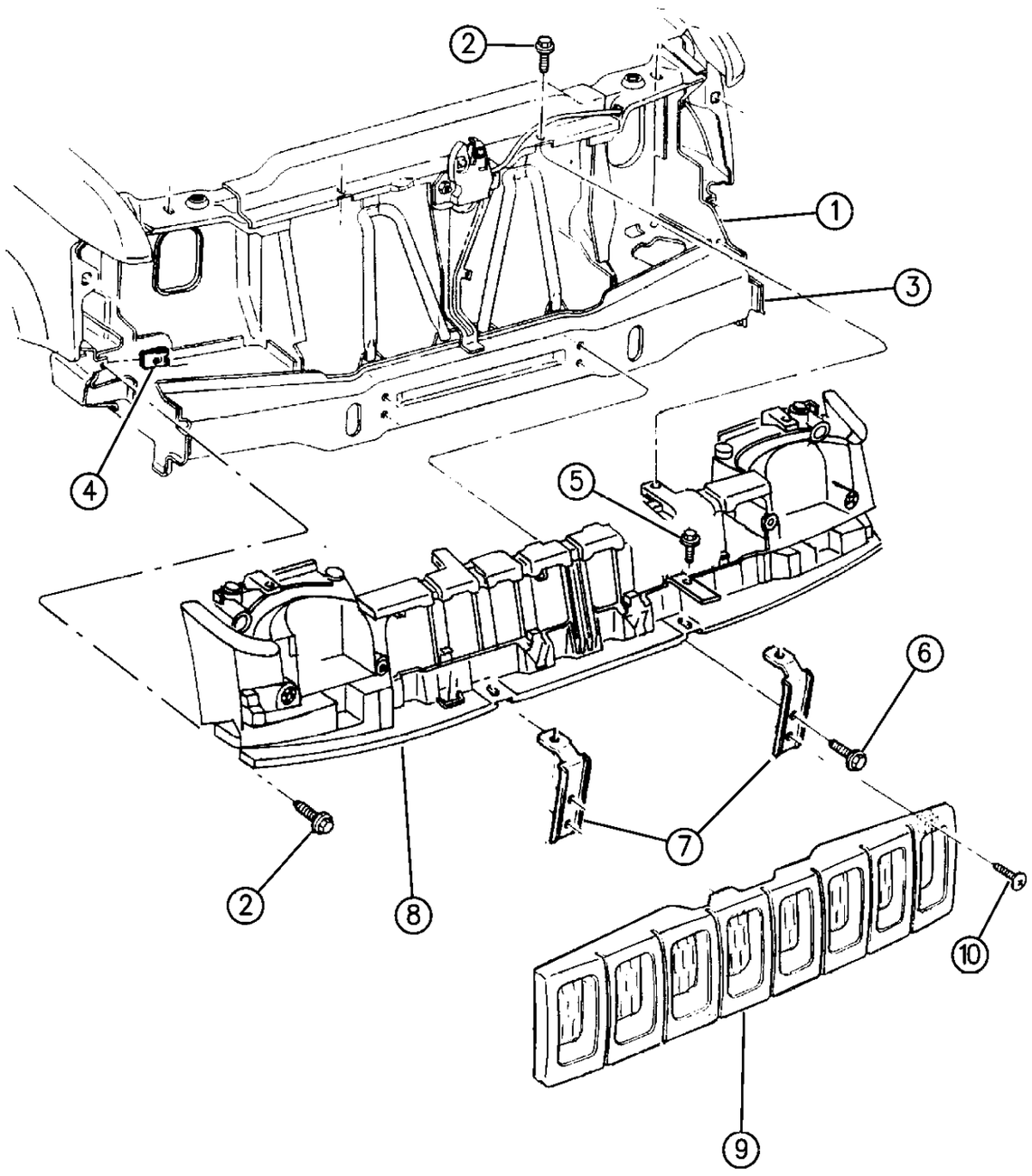

ITEM	PART NUMBER	QTY	BODY	MODEL	DESCRIPTION
1	5503 3282-3	1			PANEL, Radiator Side
2	6501 013	6			SCREW
3	5503 1446	1			CROSSMEMBER, Lower
	6502 868	4			CLIP, Deflector Att.
4	6101 442	2			U-NUT
5		2			SCREW (DNS)
6	6101 603	4			SCREW
7	5600 5780	2			BRACKET
8					REINFORCEMENT, Grille Opening
	5505 4886	1			w/o Headlamp Leveling Device, 1994-95
	5505 4996	1			w/o Headlamp Leveling, 1996
	5505 4628	1			w/Headlamp Leveling, 1994-95 EXPORT
	5505 4998	1			w/hEADLAMP LEVELING, 1996 EXPORT
	4762 277	1			REINFORCEMENT, FESM MID-EAST
	4762 279	1			BRACE, FESM MID-EAST
9					GRILLE, Radiator
					1994-95
	5DF5 4MG5	1			Hunter Green
	5DF5 4RJN	1			Moss Green
	5DF5 4MR4	1			Red
	5DF5 4MW7	1			White
	5DF5 4MX8	1			Black
	5DF5 4PFA	1			Driftwood
	5DF5 4MC9	1			Blue
	5DF5 4RJ7	1			Khaki
	5505 4890	1			Bright
	5505 4889	1			Grey
					1996
	5DN4 6SFA	1			Light Driftwood
	5DN4 6SCW	1			Iris
	5DN4 6SC5	1			Light Blue
	5DN4 6SC9	1			Jewel Blue
	5DN4 6SEG	1			Rosewood
	5DN4 6SG8	1			Forest Green
	5DN4 6SJN	1			Moss Green
	5DN4 6SJ7	1			Khaki
	5DN4 6SR4	1			Bright Red
	5DN4 6SW1	1			White
	5DN4 6SW7	1			Bright White
	5DN4 6SX8	1			Black
	5505 5059	1	ZJ		Bright
	5523 5305	1	ZG		Bright

MODEL CODES:

72=2 DR Wagon
74=4 DR Wagon
77=Open Body 93" Whlbase
78=Open Body 103" Whlbase - Export
T=2WD
J,N=4WD
U=4WD (RHD)

BODY STYLES:

YJ=Wrangler (4X4) "S"
Weangler (4X4) SE
Wrangler (4X4) Sahara
Wrangler (4X4) Renegade
XJ=Cherokee SE
Cherokee Sport
Cherokee Country
ZJ=Grand Cherokee SE
Grand Cherokee Laredo
Grand Cherolee Limited
ZG=Grand Cherokee European
Y1=Wrangler
X1=Cherokee
Z1=Grand Cherokee
KDX=Vehicles

AR = Use as Required - = Non Illustrated Part P.A.R. = Paint as Required

7-720A

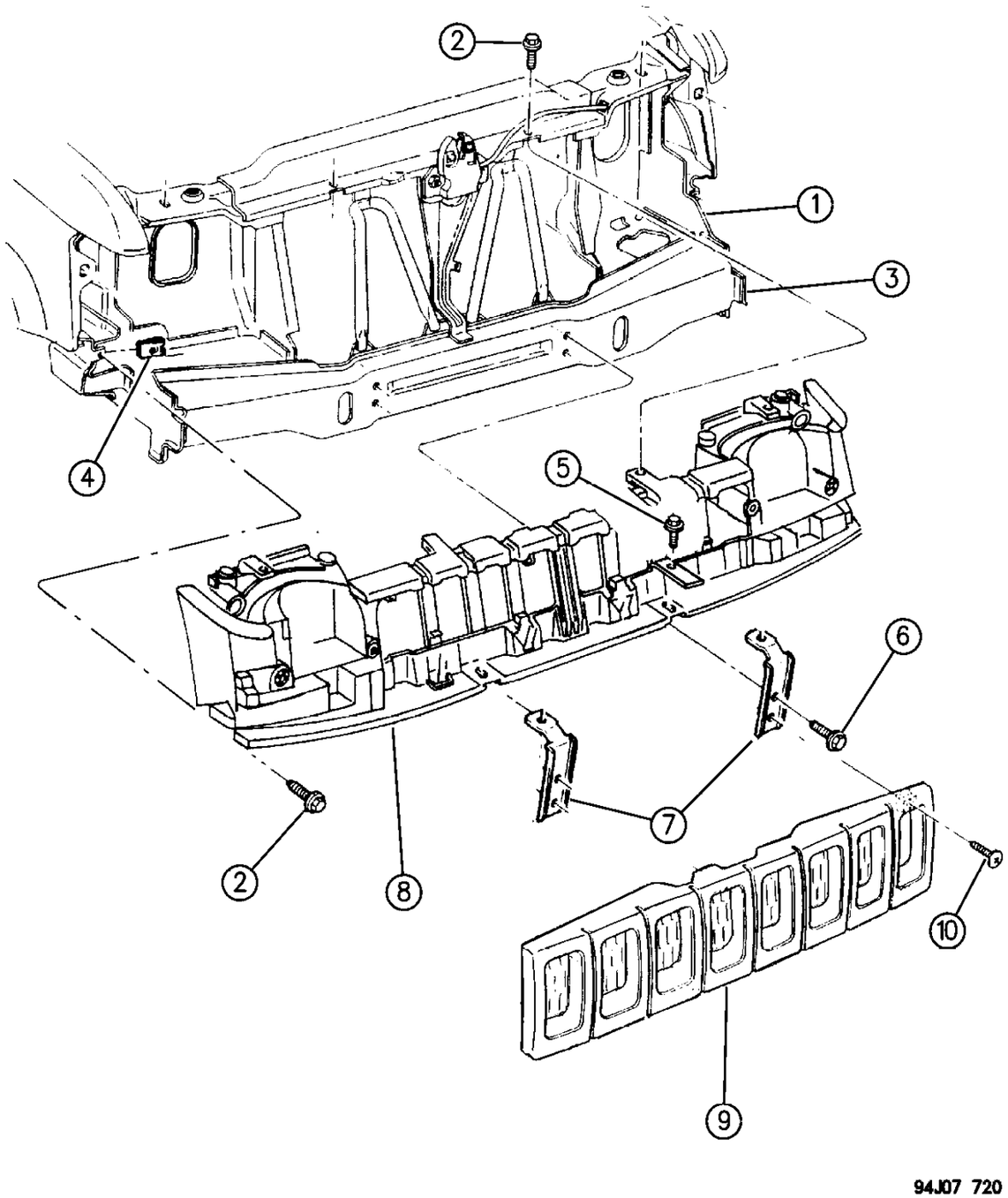

ITEM	PART NUMBER	QTY	BODY	MODEL	DESCRIPTION
					MIDDLE EAST, 1996
	5EW0 6SCW	1			Iris
	5EW0 6SC5	1			Light Blue
	5EW0 6SC9	1			Jewel Blue
	5EW0 6SEG	1			Rosewood
	5EW0 6SG8	1			Forest Green
	5EW0 6SJ7	1			Khaki
	5EW0 6SR4	1			Red
	5EW0 6SW7	1			White
	5EW0 6SX8	1			Black
10		3			SCREW (DNS)

MODEL CODES:

72=2 DR Wagon
74=4 DR Wagon
77=Open Body 93" Whlbase
78=Open Body 103" Whlbase - Export
T=2WD
J,N=4WD
U=4WD (RHD)

BODY STYLES:

YJ=Wrangler (4X4) "S"
Weangler (4X4) SE
Wrangler (4X4) Sahara
Wrangler (4X4) Renegade

XJ=Cherokee SE
Cherokee Sport
Cherokee Country

ZJ=Grand Cherokee SE
Grand Cherokee Laredo
Grand Cherolee Limited
ZG=Grand Cherokee European

Y1=Wrangler
X1=Cherokee
Z1=Grand Cherokee
KDX=Vehicles

AR = Use as Required - = Non Illustrated Part P.A.R. = Paint as Required

SAGIPARTS

GROUP-8
ELECTRICAL

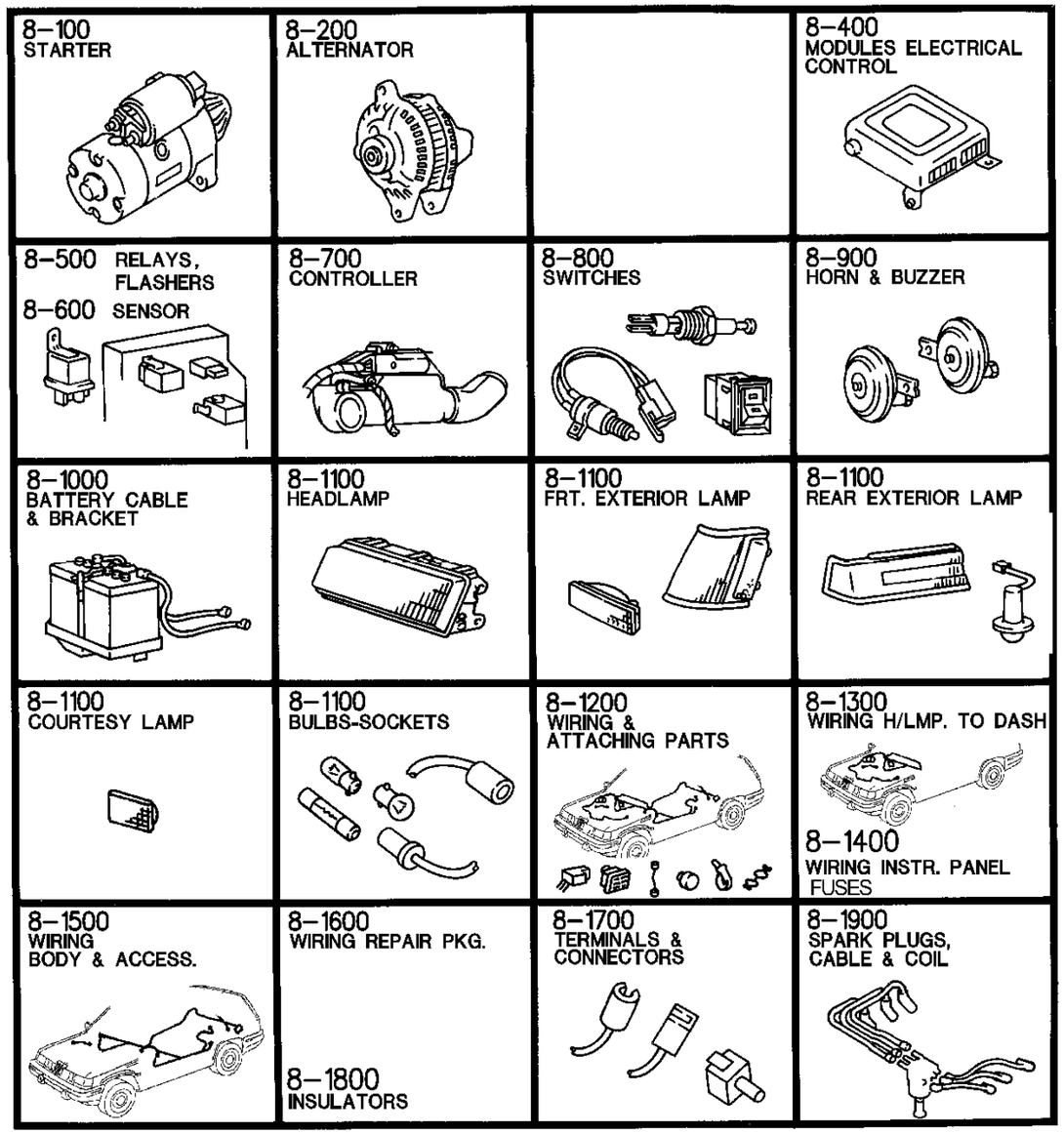

GROUP 8 - ELECTRICAL

ILLUSTRATION TITLE — **GROUP-FIG. NO.**

STARTER & MOUNTING
STARTER & MOUNTING 4-6 CYLINDER ENGINES . . . . . Fig. 8-105
STARTER AND MOUNTING DIESEL ENGINE EUROPE . . . . . Fig. 8-115
STARTER & MOUNTING 5.2 ENGINE . . . . . Fig. 8-120

ALTERNATORS
ALTERNATOR (GENERATOR) 100 AMPERE 24 VOLT WRANGLER--EGYPT-KDX . . . . . Fig. 8-204
ALTERNATOR (GENERATOR) AND MOUNTING 2.5 & 4.0 ENGINE . . . . . Fig. 8-205
ALTERNATOR (GENERATOR) AND MOUNTING 5.2 ENGINE . . . . . Fig. 8-210
ALTERNATOR (GENERATOR) AND MOUNTING DIESEL ENGINE . . . . . Fig. 8-215

DISTRIBUTORS
DISTRIBUTOR 2.5 ENGINE . . . . . Fig. 8-305
DISTRIBUTOR 4.0 ENGINE . . . . . Fig. 8-310
DISTRIBUTOR 5.2-5.9 ENGINE . . . . . Fig. 8-315

MODULES
MODULES--ELECTRONIC . . . . . Fig. 8-405

RELAYS
RELAYS WRANGLER . . . . . Fig. 8-505
RELAYS CHEROKEE--GRAND CHEROKEE . . . . . Fig. 8-510

SENSORS
CONTROL UNITS AND SENSORS . . . . . Fig. 8-605

SINGLE BOARD ENGINE CONTROLLERS
SINGLE BOARD ENGINE CONTROLLERS (POWERTRAIN CONTROL MODULE) YJ . . . . . Fig. 8-705
SINGLE BOARD ENGINE CONTROLLERS (POWERTRAIN CONTROL MODULE) XJ . . . . . Fig. 8-710
SINGLE BOARD ENGINE CONTROLLERS (POWERTRAIN CONTROL MODULE) ZJ . . . . . Fig. 8-715

SWITCHES & SENDING UNITS
SWITCHES AND SENDING UNITS ALL MODELS . . . . . Fig. 8-810
SWITCHES ALL MODELS . . . . . Fig. 8-815

HORN
HORNS ALL . . . . . Fig. 8-910

BATTERY TRAYS & CABLES
BATTERY TRAYS . . . . . Fig. 8-1005
BATTERY CABLES WRANGLER--CHEROKEE--GRAND CHEROKEE . . . . . Fig. 8-1010

LAMPS
LAMPS--FRONT WRANGLER . . . . . Fig. 8-1105
LAMPS--REAR WRANGLER . . . . . Fig. 8-1120

GROUP 8 - ELECTRICAL

ILLUSTRATION TITLE	GROUP-FIG. NO.
LAMPS (Continued)	
LAMPS--REAR WRANGLER	Fig. 8-1120
LAMPS--FRONT LEVELING WRANGLER--CHEROKEE EXPORT	Fig. 8-1130
LAMPS--FOG CHEROKEE--GRAND CHEROKEE	Fig. 8-1135
LAMPS--FRONT CHEROKEE	Fig. 8-1140
LAMPS--FRONT GRAND CHEROKEE	Fig. 8-1145
LAMPS--REAR GRAND CHEROKEE	Fig. 8-1150
LAMPS--REAR CHEROKEE	Fig. 8-1155
LAMPS--CARGO-DOME-COURTESY-UNDERHOOD WRANGLER	Fig. 8-1160
LAMPS--CARGO-DOME-COURTESY-UNDERHOOD CHEROKEE--GRAND CHEROKEE	Fig. 8-1165
BULBS ALL MODELS	Fig. 8-1170
WIRING--ENGINE	
WIRING--ENGINE AND RELATED PARTS WRANGLER	Fig. 8-1205
WIRING--ENGINE AND RELATED PARTS CHEROKEE	Fig. 8-1210
WIRING--ENGINE AND RELATED PARTS GRAND CHEROKEE	Fig. 8-1215
WIRING--HEADLAMP TO DASH	
WIRING--HEADLAMP TO DASH WRANGLER	Fig. 8-1305
WIRING--HEADLAMP TO DASH CHEROKEE	Fig. 8-1310
WIRING--HEADLAMP TO DASH GRAND CHEROKEE	Fig. 8-1315
WIRING--INSTRUMENT PANEL	
WIRING--INSTRUMENT PANEL WRANGLER	Fig. 8-1405
WIRING--INSTRUMENT PANEL CHEROKEE	Fig. 8-1410
WIRING--INSTRUMENT PANEL GRAND CHEROKEE	Fig. 8-1415
WIRING--BODY & ACCESSORY	
WIRING--BODY AND ACCESSORY WRANGLER	Fig. 8-1505
WIRING--BODY AND ACCESSORY CHEROKEE	Fig. 8-1510
WIRING--BODY AND ACCESSORY GRAND CHEROKEE	Fig. 8-1520
WIRING REPAIR PACKAGES	
CRIMP SPLICE--FUSIBLE LINK--HEAT SHRINK	Fig. 8-1605
TERMINALS	
TERMINAL CHART	Fig. 8-1705
TERMINAL CHART	Fig. 8-1710
SPARK PLUGS--CABLES--COILS	
COIL--SPARKPLUGS--WIRES 2.5 ENGINE	Fig. 8-1905
COIL--SPARKPLUGS--WIRES 4.0 ENGINE	Fig. 8-1910
COIL--SPARKPLUGS--WIRES 5.2 ENGINE	Fig. 8-1915

STARTER & MOUNTING 4-6 CYLINDER ENGINES
Figure 8-105

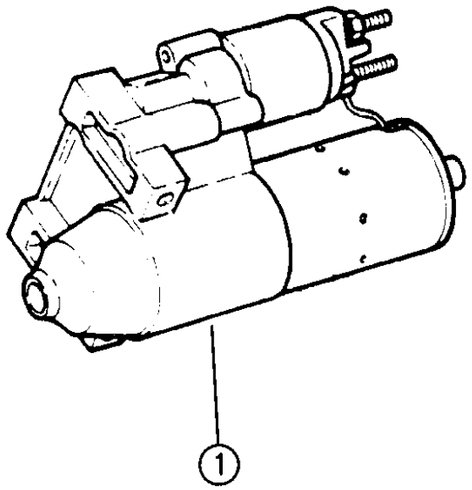

94J08 105

ITEM	PART NUMBER	QTY	BODY	MODEL	DESCRIPTION
1	5602 7317	1			STARTER, 4.0 Eng.
	4796 981	1			2.5 Eng. (Mtg. Bolt J4006964)
-	J324 1711				SHIM, (.015)
	1150 2606	1			BOLT, Mounting
	J400 6192	1			BOLT, Mounting (Hex Head)

MODEL CODES:

72=2 DR Wagon
74=4 DR Wagon
77=Open Body 93" Whlbase
78=Open Body 103" Whlbase - Export
T=2WD
J,N=4WD
U=4WD (RHD)

BODY STYLES:

YJ=Wrangler (4X4) "S"
Weangler (4X4) SE
Wrangler (4X4) Sahara
Wrangler (4X4) Renegade

XJ=Cherokee SE
Cherokee Sport
Cherokee Country

ZJ=Grand Cherokee SE
Grand Cherokee Laredo
Grand Cherolee Limited
ZG=Grand Cherokee European

Y1=Wrangler
X1=Cherokee
Z1=Grand Cherokee
KDX=Vehicles

AR = Use as Required - = Non Illustrated Part P.A.R. = Paint as Required

« RETURN TO GROUP INDEX

STARTER AND MOUNTING DIESEL ENGINE EUROPE
Figure 8-115

8-115A

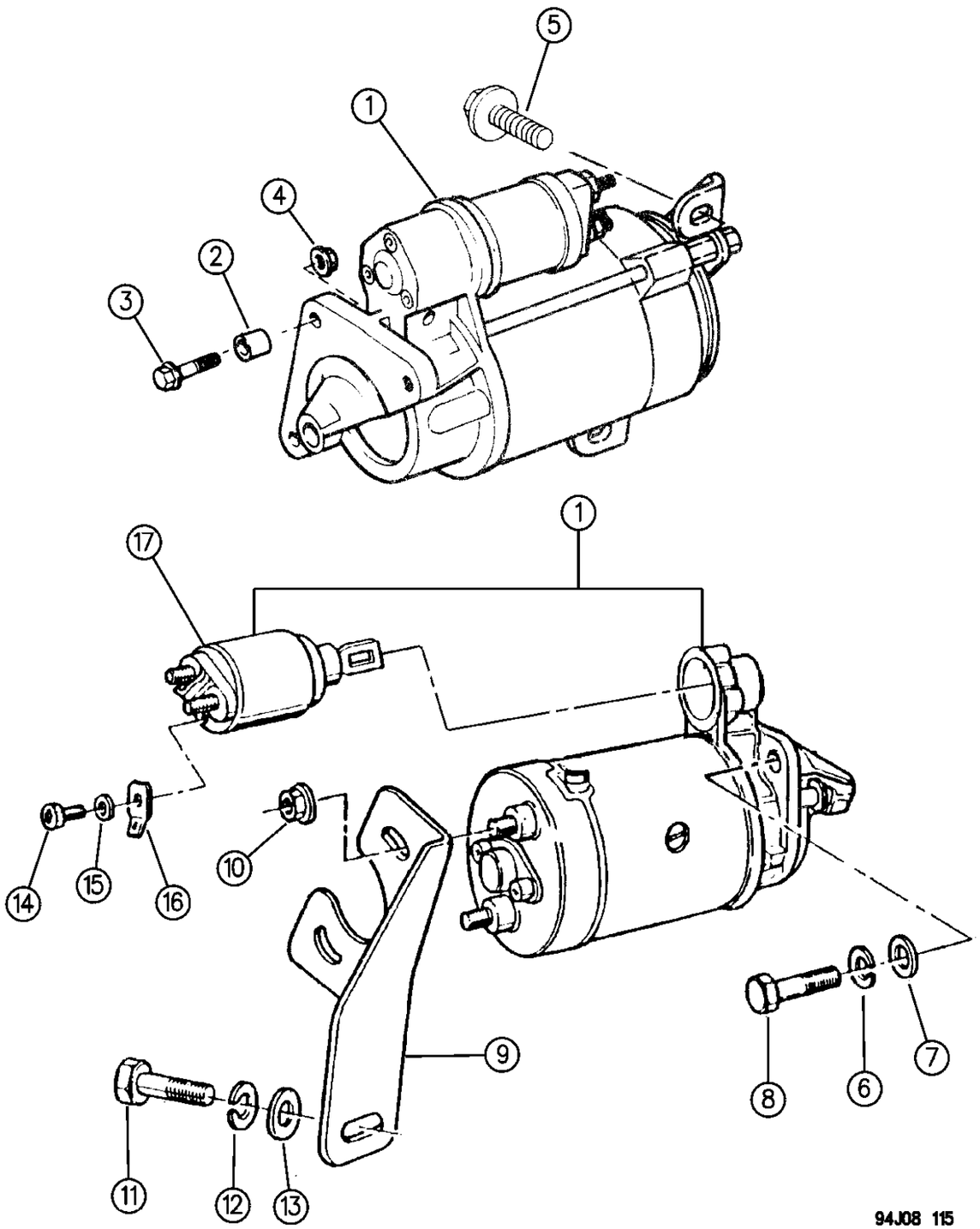

ITEM	PART NUMBER	QTY	BODY	MODEL	DESCRIPTION
1	5602 6851	1			STARTER
	4796 044				2.5L Turbo Diesel
-	5602 7329	1			HEAT SHIELD ASSEMBLY, 2.5L Turbo Diesel ***
2	5300 1858	1			PIN
3	3420 2029				BOLT, w/Man. Trans. (M10-1.50mm)
4	6502 135	2			NUT
5	1150 2693	2			BOLT, Rear Bracket
6		1	ZG		WASHER, Spring (Not Serviced)
7	4723 292	1	ZG		WASHER
8	4723 199	1	ZG		BOLT (M8x30) ***
9	4796 045	1	ZG		BRACKET
10		1	ZJ		NUT, Flange (Not Serviced)
11	4723 280	1	ZG		SCREW, Cap (M10x20)
12	4720 686	1	ZG		WASHER, Spring
13	4723 281	1	ZG		WASHER, (10) 5x21x2
14	4723 276	1	ZG		SCREW, Cap (M4x6)
15	4723 277	1	ZG		WASHER (4) 3x9x0 ***
16	4723 278	1	ZG		TERMINAL, Spade
17	4723 275	1	ZG		ELECTROMAGNET ***

MODEL CODES:

72=2 DR Wagon
74=4 DR Wagon
77=Open Body 93" Whlbase
78=Open Body 103" Whlbase - Export
T=2WD
J,N=4WD
U=4WD (RHD)

BODY STYLES:

YJ=Wrangler (4X4) "S"
Weangler (4X4) SE
Wrangler (4X4) Sahara
Wrangler (4X4) Renegade
XJ=Cherokee SE
Cherokee Sport
Cherokee Country
ZJ=Grand Cherokee SE
Grand Cherokee Laredo
Grand Cherolee Limited
ZG=Grand Cherokee European
Y1=Wrangler
X1=Cherokee
Z1=Grand Cherokee
KDX=Vehicles

AR = Use as Required - = Non Illustrated Part P.A.R. = Paint as Required

« RETURN TO GROUP INDEX

STARTER & MOUNTING 5.2 ENGINE
Figure 8-120

8–120

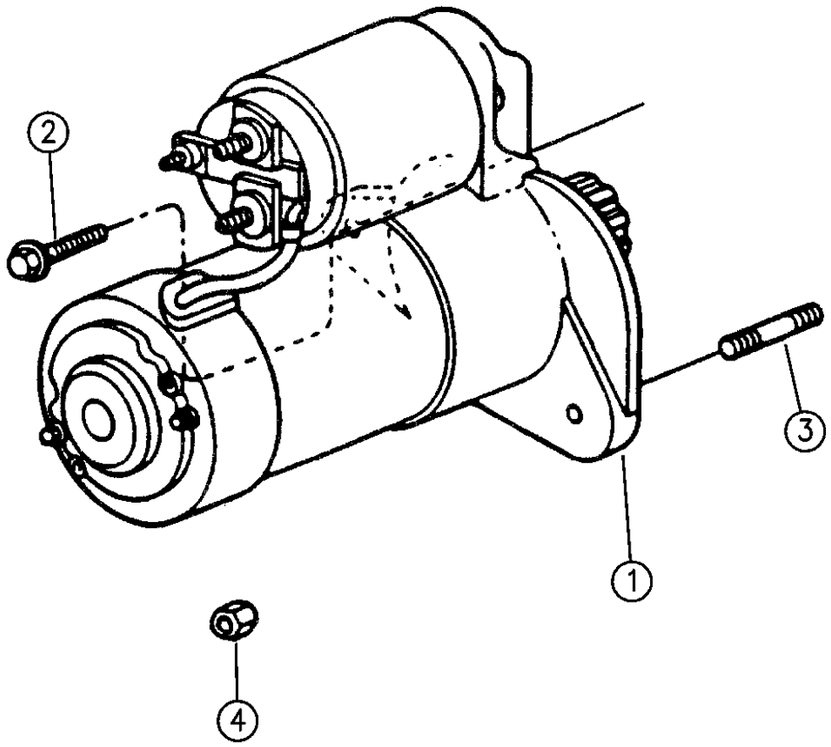

94J08 120

ITEM	PART NUMBER	QTY	BODY	MODEL	DESCRIPTION
1	5600 4934	1			STARTER
2	6023 899	AR			SCREW, w/Washer
3	2095 875	1			STUD
4	0272 235	1			NUT

MODEL CODES:

72=2 DR Wagon
74=4 DR Wagon
77=Open Body 93" Whlbase
78=Open Body 103" Whlbase - Export
T=2WD
J,N=4WD
U=4WD (RHD)

BODY STYLES:

YJ=Wrangler (4X4) "S"
Weangler (4X4) SE
Wrangler (4X4) Sahara
Wrangler (4X4) Renegade
XJ=Cherokee SE
Cherokee Sport
Cherokee Country
ZJ=Grand Cherokee SE
Grand Cherokee Laredo
Grand Cherolee Limited
ZG=Grand Cherokee European
Y1=Wrangler
X1=Cherokee
Z1=Grand Cherokee
KDX=Vehicles

AR = Use as Required - = Non Illustrated Part P.A.R. = Paint as Required

ALTERNATOR (GENERATOR) 100 AMPERE 24 VOLT WRANGLER--EGYPT-KDX
Figure 8-204

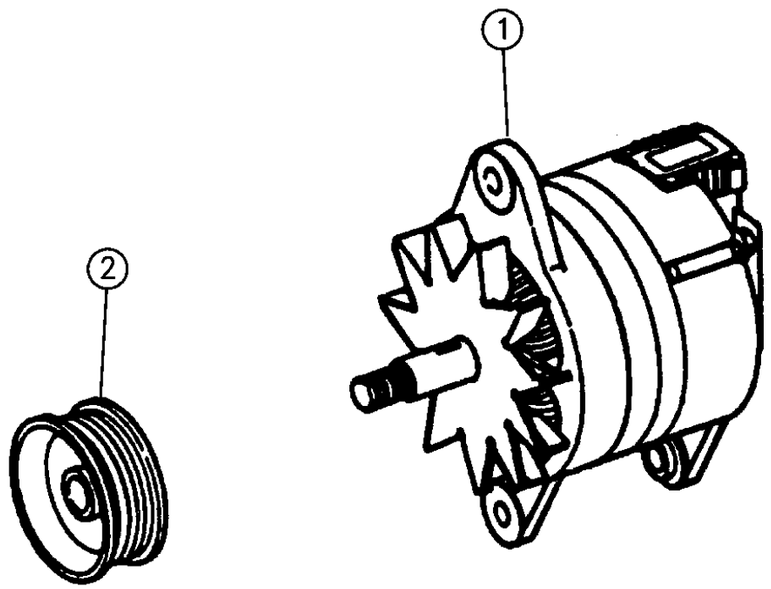

ITEM	PART NUMBER	QTY	BODY	MODEL	DESCRIPTION
1	J805 1821	1			ALTERNATOR
2	5300 3686	1			PULLEY

MODEL CODES:

72=2 DR Wagon
74=4 DR Wagon
77=Open Body 93" Whlbase
78=Open Body 103" Whlbase - Export
T=2WD
J,N=4WD
U=4WD (RHD)

94J08 204

BODY STYLES:

YJ=Wrangler (4X4) "S"
Weangler (4X4) SE
Wrangler (4X4) Sahara
Wrangler (4X4) Renegade
XJ=Cherokee SE
Cherokee Sport
Cherokee Country
ZJ=Grand Cherokee SE
Grand Cherokee Laredo
Grand Cherolee Limited
ZG=Grand Cherokee European
Y1=Wrangler
X1=Cherokee
Z1=Grand Cherokee
KDX=Vehicles

AR = Use as Required - = Non Illustrated Part P.A.R. = Paint as Required

ALTERNATOR (GENERATOR) AND MOUNTING 2.5 & 4.0 ENGINE
Figure 8-205

8–205

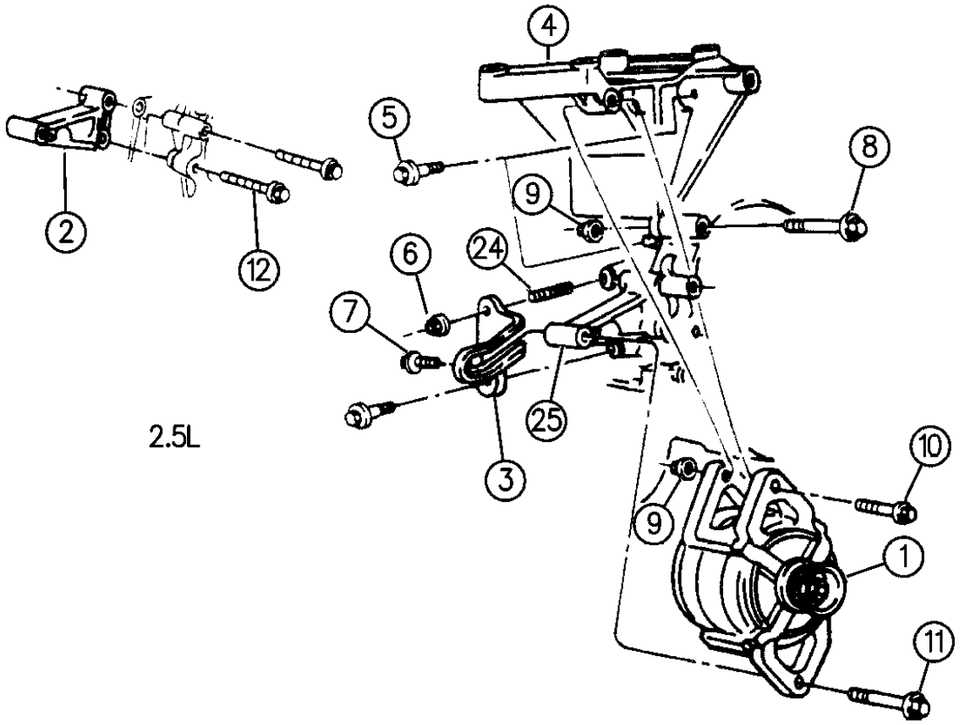

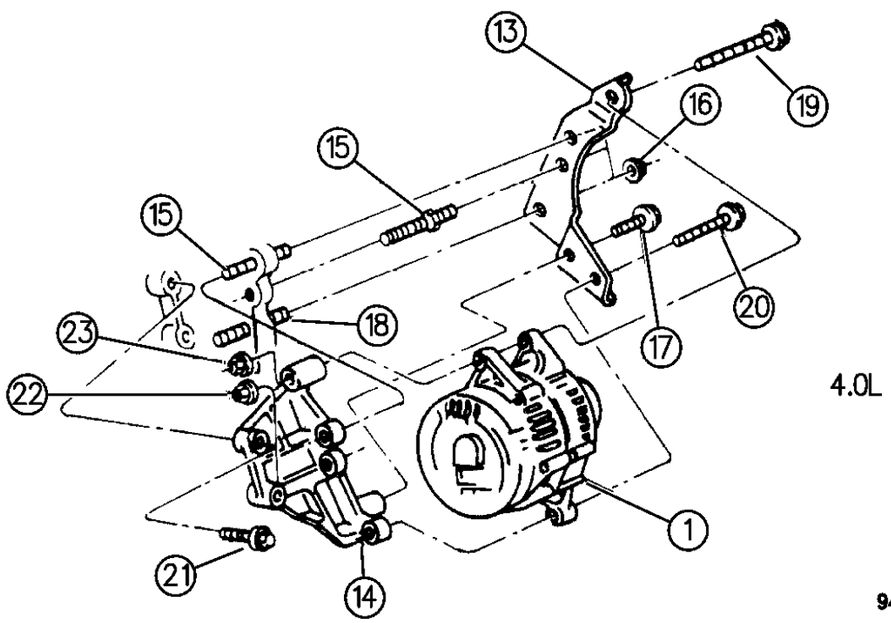

ITEM	PART NUMBER	QTY	BODY	MODEL	DESCRIPTION
1		1			ALTERNATOR, (Generator)
	5600 5685		XJ,YJ,Z		90 AMP
	5602 6936	1	XJ,X1		90 Amp. (RHD or EUROPE)
	5602 6811	1	X1		117 Amp.
	5600 5686		ZJ		136 Amp.
2	5300 7604	1			BRACKET, 2.5 Eng.
3	5300 7506	1			BRACE
4		1			BRACKET
	5300 7600				
	5301 0051		XJ		EUROPE 4.0L
	5301 0051		X1		RHD 4.0L
5	6025 063	5			BOLT
6	0152 344	2			NUT
7	6502 144	1			BOLT
8	6502 143	1			BOLT
9	6502 135	2			NUT
10	6502 134	1			BOLT
11	6502 136	1			BOLT
12	6033 949	2			BOLT
13	5300 6869	1			BRACKET
14	5300 8850	1	XJ		BRACKET, 4.0 Eng.
15	6034 093	2			STUD
16	0152 344	3			NUT
17	6502 144	1			BOLT
18	6033 909				STUD
19	6502 143	1			SCREW
20	6502 136	1			SCREW
21	6025 063	2			SCREW
22	J400 6080	2			NUT
23	6502 135	1			NUT
24	6033 883	2			STUD, 2.5 Eng.
25					BRACKET, Alternator and A/C Mounting
	5301 0273	1	Y1		RHD
	5300 7606	1	ZJ ZG	YJ Y1	LHD
-	5301 0048		XJ,X1		BRACE, Alt. Mtg. Rear

MODEL CODES:

72=2 DR Wagon
74=4 DR Wagon
77=Open Body 93" Whlbase
78=Open Body 103" Whlbase - Export
T=2WD
J,N=4WD
U=4WD (RHD)

BODY STYLES:

YJ=Wrangler (4X4) "S"
Weangler (4X4) SE
Wrangler (4X4) Sahara
Wrangler (4X4) Renegade
XJ=Cherokee SE
Cherokee Sport
Cherokee Country
ZJ=Grand Cherokee SE
Grand Cherokee Laredo
Grand Cherolee Limited
ZG=Grand Cherokee European
Y1=Wrangler
X1=Cherokee
Z1=Grand Cherokee
KDX=Vehicles

AR = Use as Required - = Non Illustrated Part P.A.R. = Paint as Required

« RETURN TO GROUP INDEX

ALTERNATOR (GENERATOR) AND MOUNTING 5.2 ENGINE
Figure 8-210

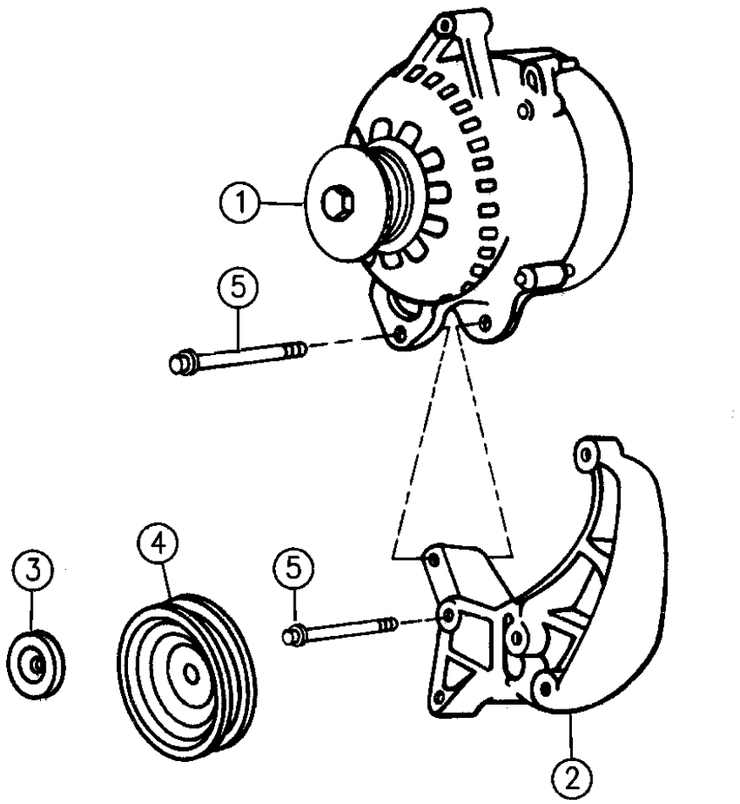

94J08 210

ITEM	PART NUMBER	QTY	BODY	MODEL	DESCRIPTION
1		1			ALTERNATOR, (Generator) 90 Amp.
	5300 8647	1			1994
	5602 7912	1			1995-96
2	5300 8618	1			BRACKET
3	3300 2201	1			BUSHING
4	5300 9508	1			PULLEY
5	6034 247	2			SCREW, w/Washer

MODEL CODES:

72=2 DR Wagon
74=4 DR Wagon
77=Open Body 93" Whlbase
78=Open Body 103" Whlbase - Export
T=2WD
J,N=4WD
U=4WD (RHD)

BODY STYLES:

YJ=Wrangler (4X4) "S"
Weangler (4X4) SE
Wrangler (4X4) Sahara
Wrangler (4X4) Renegade
XJ=Cherokee SE
Cherokee Sport
Cherokee Country
ZJ=Grand Cherokee SE
Grand Cherokee Laredo
Grand Cherolee Limited
ZG=Grand Cherokee European
Y1=Wrangler
X1=Cherokee
Z1=Grand Cherokee
KDX=Vehicles

AR = Use as Required - = Non Illustrated Part P.A.R. = Paint as Required

ALTERNATOR (GENERATOR) AND MOUNTING DIESEL ENGINE
Figure 8-215

8-215A

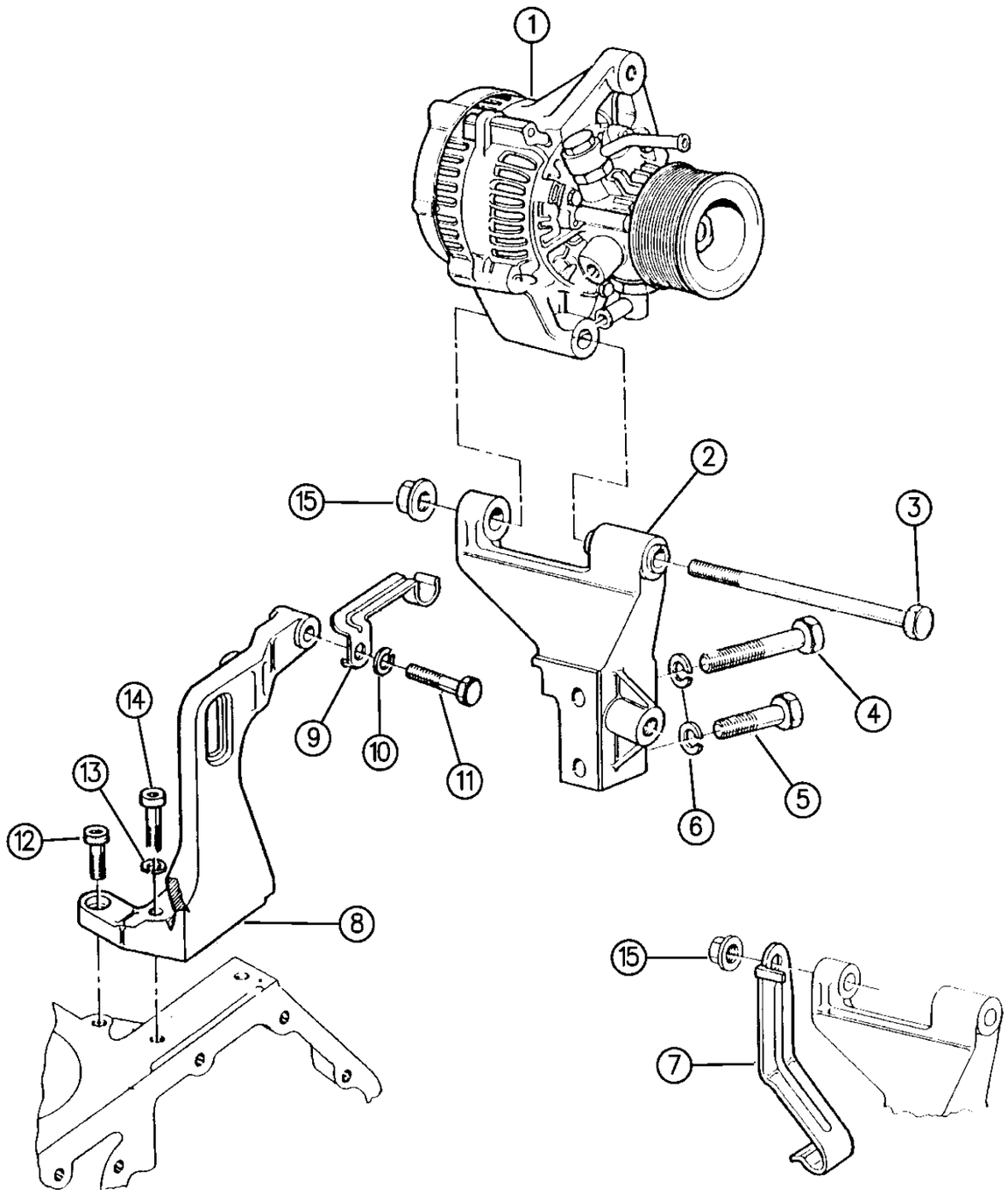

ITEM	PART NUMBER	QTY	BODY	MODEL	DESCRIPTION
1		1			ALTERNATOR, (Generator)
	5300 6070		XJ ZJ		VALEO (17 AMP)
	4864 441		XJZG		Diesel 1995-96 w/Vacuum Pump
2	4796 186	1	ZG		BRACKET, Lower
3	4796 042	1	ZG		SCREW, Cap (M10x1.50)
4	4796 189	1	ZG		SCREW
5	4796 188	1	ZG		SCREW, Cap
6	4723 272	1	ZG		WASHER, Spring
7	4796 407	1	ZG		CLIP, Lower (Vacuum Pump Hose)
8	4796 187	1	ZG		BRACKET, Upper
9	4796 404	1	ZG		CLIP, Vacuum Pump Hose
10	4723 165	1	ZG		WASHER, Spring
11		1	ZG		BOLT M8x45 (Not Serviced) ***
12		1	ZG		BOLT M10x25 (Not Serviced) ***
13	4720 688	1	ZG		WASHER, Spring 10
14		1	ZG		BOLT M10x35 (Not Serviced) ***
15	4796 038	AR	ZG		NUT, Flanged (M10)

MODEL CODES:

72=2 DR Wagon
74=4 DR Wagon
77=Open Body 93" Whlbase
78=Open Body 103" Whlbase - Export
T=2WD
J,N=4WD
U=4WD (RHD)

BODY STYLES:

YJ=Wrangler (4X4) "S"
Weangler (4X4) SE
Wrangler (4X4) Sahara
Wrangler (4X4) Renegade
XJ=Cherokee SE
Cherokee Sport
Cherokee Country
ZJ=Grand Cherokee SE
Grand Cherokee Laredo
Grand Cherolee Limited
ZG=Grand Cherokee European
Y1=Wrangler
X1=Cherokee
Z1=Grand Cherokee
KDX=Vehicles

AR = Use as Required - = Non Illustrated Part P.A.R. = Paint as Required

« RETURN TO GROUP INDEX

DISTRIBUTOR 2.5 ENGINE
Figure 8-305

8-305A

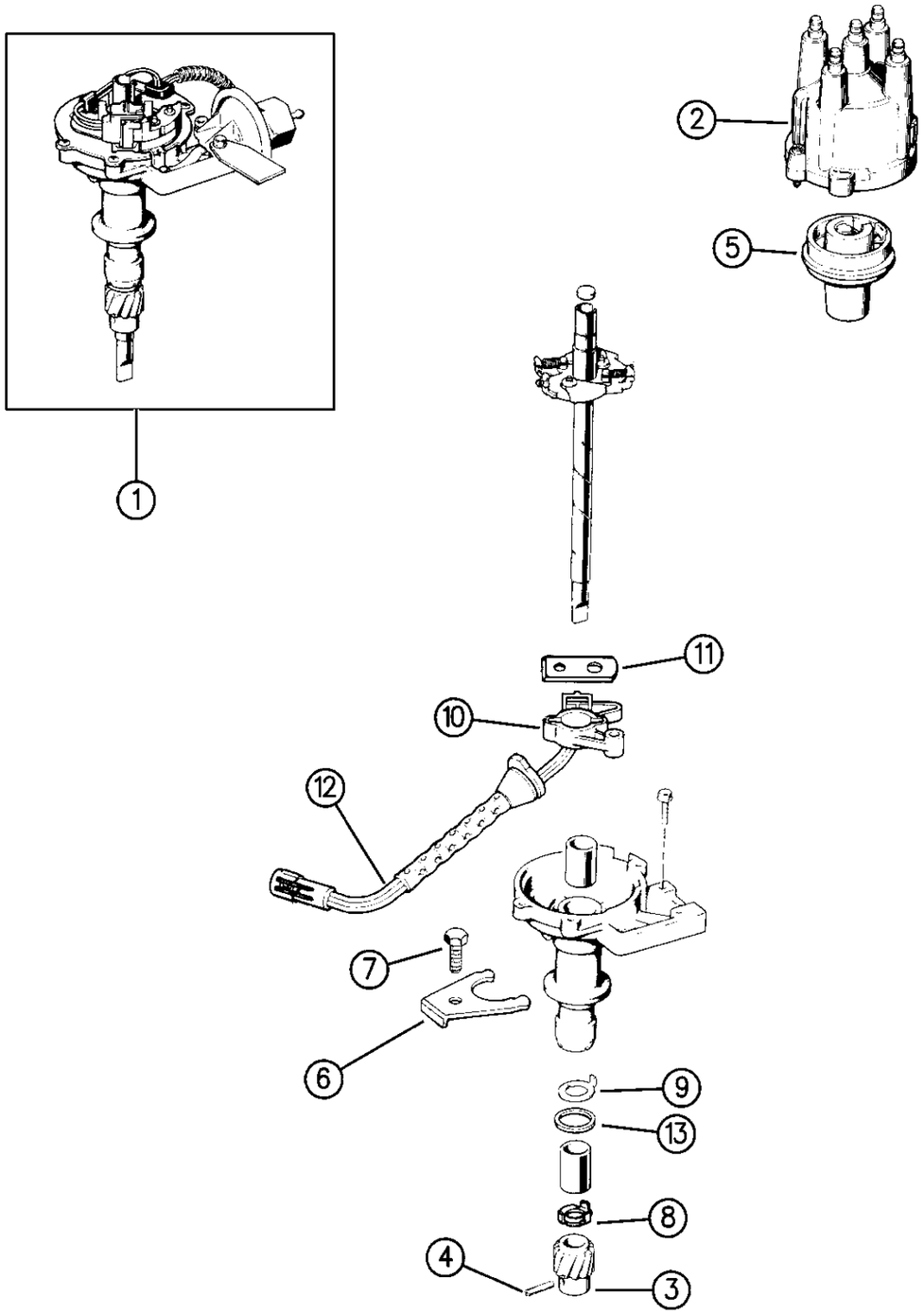

ITEM	PART NUMBER	QTY	BODY	MODEL	DESCRIPTION
1	4723 066	1			DISTRIBUTOR, Complete, w/M.P.I. (Up To Nov. 1994)
	5602 7027	1			(Aft. Nov. 1994)
	5602 7088	1			2.5 Eng., Carb., w/o Cap & Rotor, EUROPE
2					CAP, Dist.
	5300 6152	1			w/Dist. 56027027-56006151
	J323 4451	1			(w/Dist. 56027088) EUROPE
3	8350 6515	1			GEAR, Dist. (w/Dist. 56027027)
	J323 1112	1			(w/Dist. 56027088) EUROPE
4	9422 127	1			PIN, (w/Dist. 56027027)
5	5602 7019	1			ROTOR, Dist. (w/Dist. 56027027)
	3300 4795	1			(w/Dist. 56027088) EUROPE
6	3300 4242	1			CLAMP, Dist.
7	6033 479	1			BOLT
8	3300 4594	1			WASHER, Lower (w/Dist. 56027027)
9	5300 9078	1			WASHER, Upper (w/Dist. 56027027)
10	5602 7023	1			PLATE, w/Switch, (w/Dist. 56027027)
11	5300 6158	1			ROD, (w/Dist. 53006151)
12	5300 9077	1			STATOR, (w/Dist. 53006151)
13	J318 1288	1			GASKET, Dist.
-	8350 0409	1			SENSOR, Distributor Stator

MODEL CODES:

72=2 DR Wagon
74=4 DR Wagon
77=Open Body 93" Whlbase
78=Open Body 103" Whlbase - Export
T=2WD
J,N=4WD
U=4WD (RHD)

BODY STYLES:

YJ=Wrangler (4X4) "S"
Weangler (4X4) SE
Wrangler (4X4) Sahara
Wrangler (4X4) Renegade
XJ=Cherokee SE
Cherokee Sport
Cherokee Country
ZJ=Grand Cherokee SE
Grand Cherokee Laredo
Grand Cherolee Limited
ZG=Grand Cherokee European
Y1=Wrangler
X1=Cherokee
Z1=Grand Cherokee
KDX=Vehicles

AR = Use as Required - = Non Illustrated Part P.A.R. = Paint as Required

« RETURN TO GROUP INDEX

DISTRIBUTOR 4.0 ENGINE
Figure 8-310

8-310B

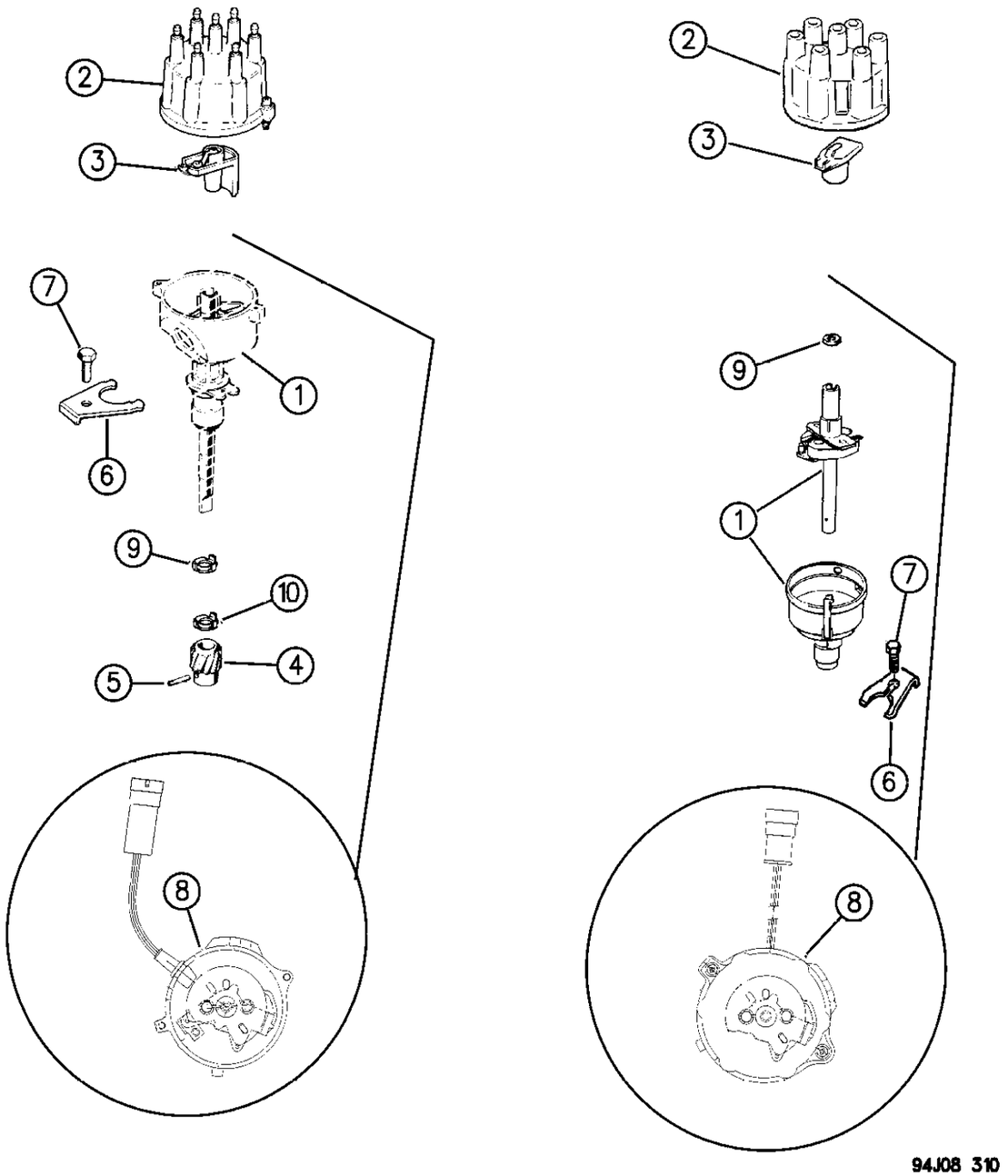

ITEM	PART NUMBER	QTY	BODY	MODEL	DESCRIPTION
1	4723 067	1			DISTRIBUTOR, (Complete) (Up To Nov. 1994)
	5602 7028	1			(Aft. Nov. 1994)
-	J318 1288	1			GASKET, Distributor Mounting
2	5602 6876	1			CAP, Dist. (w/Dist. 53006150 & 56027028)
3	5602 7019	1			ROTOR, Dist. (w/Dist. 56027028)
	5602 7075	1			(w/Dist. 53006150)
4	5300 9077	1			STATOR, Dist. (w/Dist. 53006150)
5	8350 4635	1			GEAR, Dist. (w/Dist. 53006150 & 56027028)
6	9422 127	1			PIN, (w/Dist. 56027028)
7	3300 4242	1			CLAMP
8	6033 479	1			BOLT
9	5602 7023	1			PLATE, w/Switch, (w/Dist. 56027028)
	5602 6817	1			(w/Dist. 53006150)
10	5300 9078	1			WASHER, Thrust
-	5300 6158	1			ROD
-	3300 4594	1			WASHER, Thrust
11		1	ALL	J	SEAL, Distributor Shaft (serviced with Dist)

MODEL CODES:

72=2 DR Wagon
74=4 DR Wagon
77=Open Body 93" Whlbase
78=Open Body 103" Whlbase - Export
T=2WD
J,N=4WD
U=4WD (RHD)

BODY STYLES:

YJ=Wrangler (4X4) "S"
Weangler (4X4) SE
Wrangler (4X4) Sahara
Wrangler (4X4) Renegade
XJ=Cherokee SE
Cherokee Sport
Cherokee Country
ZJ=Grand Cherokee SE
Grand Cherokee Laredo
Grand Cherolee Limited
ZG=Grand Cherokee European
Y1=Wrangler
X1=Cherokee
Z1=Grand Cherokee
KDX=Vehicles

AR = Use as Required - = Non Illustrated Part P.A.R. = Paint as Required

« RETURN TO GROUP INDEX

DISTRIBUTOR 5.2-5.9 ENGINE
Figure 8-315

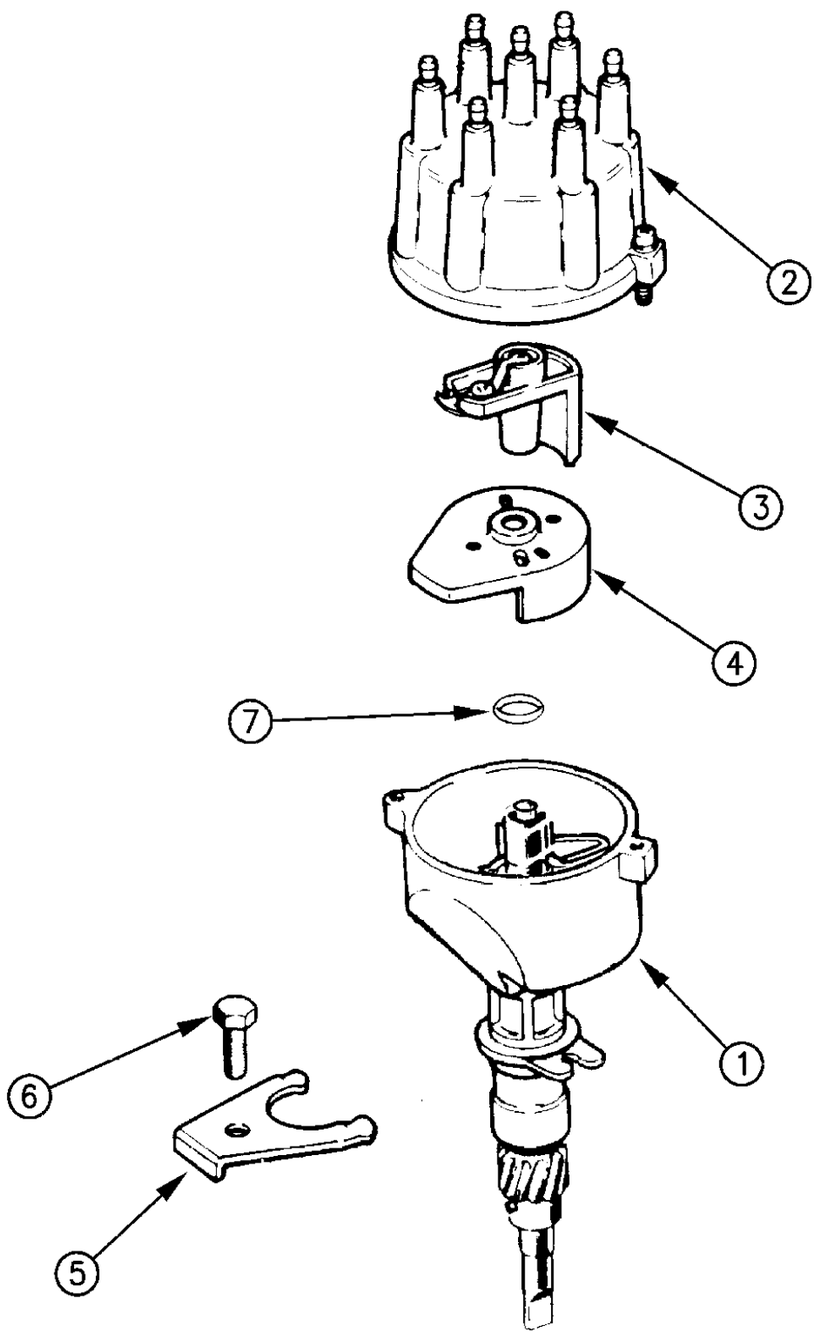

ITEM	PART NUMBER	QTY	BODY	MODEL	DESCRIPTION
1	4740 339	1			DISTRIBUTOR, Partial
2	5300 8767	1			CAP, Dist.
3	5300 8778	1			ROTOR
4	5602 6746	1			SWITCH, w/Plate, Dist.
5	4343 950	1			CLAMP, Hold Down
6	6028 606	1			SCREW, Dist. Clamp
7	2875 923	1			O-RING, Dist. Housing

MODEL CODES:

72=2 DR Wagon
74=4 DR Wagon
77=Open Body 93" Whlbase
78=Open Body 103" Whlbase - Export
T=2WD
J,N=4WD
U=4WD (RHD)

BODY STYLES:

YJ=Wrangler (4X4) "S"
Weangler (4X4) SE
Wrangler (4X4) Sahara
Wrangler (4X4) Renegade

XJ=Cherokee SE
Cherokee Sport
Cherokee Country

ZJ=Grand Cherokee SE
Grand Cherokee Laredo
Grand Cherolee Limited
ZG=Grand Cherokee European

Y1=Wrangler
X1=Cherokee
Z1=Grand Cherokee
KDX=Vehicles

AR = Use as Required - = Non Illustrated Part P.A.R. = Paint as Required

« RETURN TO GROUP INDEX

MODULES--ELECTRONIC
Figure 8-405

8–405

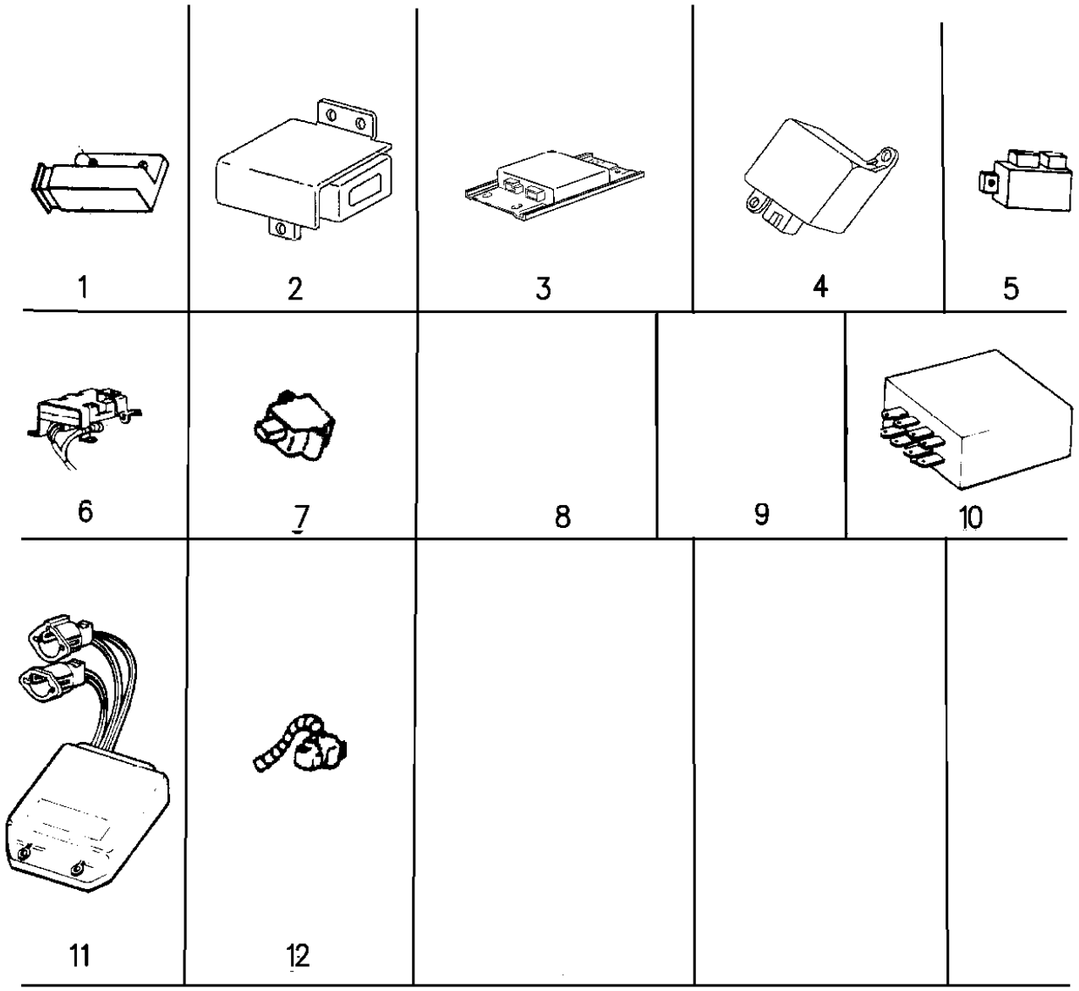

94J08 405

ITEM	PART NUMBER	QTY	BODY	MODEL	DESCRIPTION
1	5600 7182				MODULE, Hi-Speed
2	J400 1701		YJ		SCREW
3	5600 6184		ZJ		MODULE, H/Lamp Dimming
4		1			MODULE, Twilight Sentinel
	5600 5996		ZJ		
	5600 0636		XJ		
5		1			MODULE, Daytime Running Lamp
	5600 4262		XJYJ		1994-96
	5600 7501		ZJ		1994-95
	5600 4262		ZJ		1996
6	5600 6957		YJ,XJ		MODULE, Wiper Intermittent
	5600 7192		ZJ		MODULE, Wiper Intermittent
7	5600 7081		XJ		MODULE, Dim
8	5600 7501	1	ZJ		MODULE, Daytime Running Lamp & I/Panel Lamp Dimming (Dual Module)
9		1			MODULE, Lamp Outage, w/Maintenance Monitor
	5604 2018		ZGZ1		1994-96
	5600 5235		ZJ		1994-95
	5604 2017		ZJ		1996
	5604 2255		ZG		1996
10		1	ZJ		MODULE, w/Driver Side Air Bag System
	5600 7108				1994-95
	5600 9021				1996
11			XJZJYJ		MODULE, Adaptive Brakes (Bracket 56027060)
	5602 6993				
12			XJZJYJ		MODULE, Anti-Lock Brakes
	5602 7560				1994
	5602 7863				1995
	5602 7271				1996
-	5600 9021	1	YJ		BRACKET, ABS Module 1996
	5602 7060		YJ		BRACKET ABS Module 1994-1995 ***
-	3600 1676	AR			DIODE, ABS
-	5602 6742	1	XJ		BRACKET, ABS Mtg.
	5600 6316		ZJ		
-	J448 9487	2			SCREW
-					MODULE, Chime Warning/Seat Belt/Key
	5600 6063		ZJ		
	5600 7182		ZJ		Chime, Hi-Speed Warning (EXPORT)
-	5300 5079				MODULE, Ignition (China)
-	5600 6947				MODULE, Security Alarm
-	5600 7302	1			MODULE, Vehicle Information Center
-	5602 6769	1	XJ		MODULE, Trans. Control w/DGS Transmission

MODEL CODES:

72=2 DR Wagon
74=4 DR Wagon
77=Open Body 93" Whlbase
78=Open Body 103" Whlbase - Export
T=2WD
J,N=4WD
U=4WD (RHD)

BODY STYLES:

YJ=Wrangler (4X4) "S"
Weangler (4X4) SE
Wrangler (4X4) Sahara
Wrangler (4X4) Renegade
XJ=Cherokee SE
Cherokee Sport
Cherokee Country
ZJ=Grand Cherokee SE
Grand Cherokee Laredo
Grand Cherolee Limited
ZG=Grand Cherokee European
Y1=Wrangler
X1=Cherokee
Z1=Grand Cherokee
KDX=Vehicles

AR = Use as Required - = Non Illustrated Part P.A.R. = Paint as Required

MODULES--ELECTRONIC
Figure 8-405

8-405

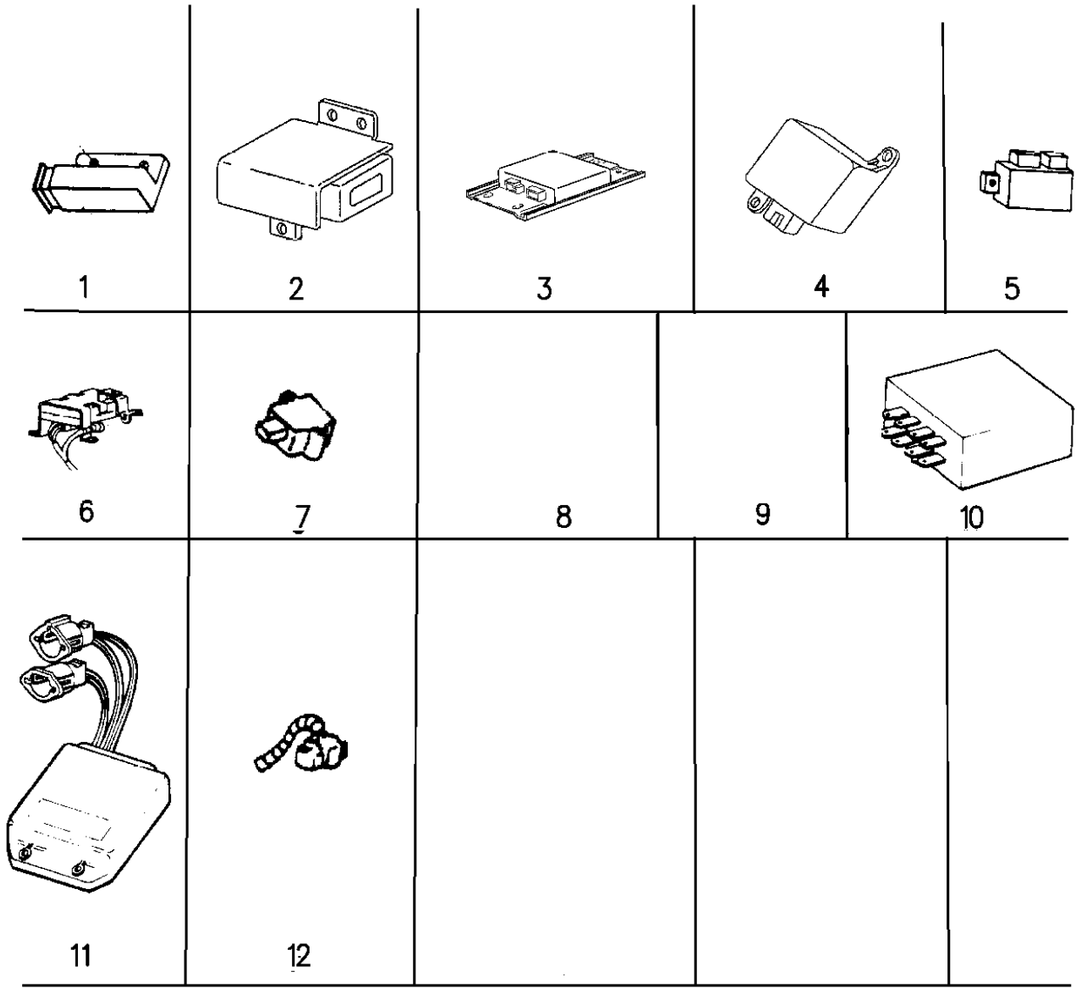

94J08 405

ITEM	PART NUMBER	QTY	BODY	MODEL	DESCRIPTION
	5300 8383	1	XJ		EUROPE
	5602 6935		XJ		RHD, EUROPE
	5604 1017		XJ		RHD 1996 ***
	5604 1016		XJ		LHD 1996 ***
	5300 9230		ZJ		(On Left Cowl) (Use Backplate 53009231)
	5602 7316		ZJ		w/42-RE Trans. (A-500)
			ZJ		w/46RH (A518 Transmission) See SBEC II Engine Controller
	4762 269				42RE Trans., MIDEAST
-	5600 7108		ZJ		MODULE, Airbag Diagnostic
-	5600 7047		ZJ		MODULE, Inst. Lamp Dimming
	5604 2055	2	ZJ		MODULE, Heated Seat Control
	5604 2056	1	ZJ		MODULE, Memory Seat
-	5604 2140	1	ZJ		MODULE, Right Hand Door Switch
					MODULE, Door Switch
	5603 6903	1	ZG		RHD w/Laredo Package & Six Speaker Stereo Right
	5603 6879	1	ZG		RHD w/Laredo Package & Six Speaker Stereo Left
	5603 6906	1	ZG		RHD w/Keyless Entry Left
-			ZJ		MODULE, Body Control (56042144 REPAIR/EXCHANGE CENTER)

MODEL CODES:

72=2 DR Wagon
74=4 DR Wagon
77=Open Body 93" Whlbase
78=Open Body 103" Whlbase - Export
T=2WD
J,N=4WD
U=4WD (RHD)

BODY STYLES:

YJ=Wrangler (4X4) "S"
Weangler (4X4) SE
Wrangler (4X4) Sahara
Wrangler (4X4) Renegade

XJ=Cherokee SE
Cherokee Sport
Cherokee Country

ZJ=Grand Cherokee SE
Grand Cherokee Laredo
Grand Cherolee Limited
ZG=Grand Cherokee European

Y1=Wrangler
X1=Cherokee
Z1=Grand Cherokee
KDX=Vehicles

AR = Use as Required - = Non Illustrated Part P.A.R. = Paint as Required

RELAYS WRANGLER
Figure 8-505

8–505

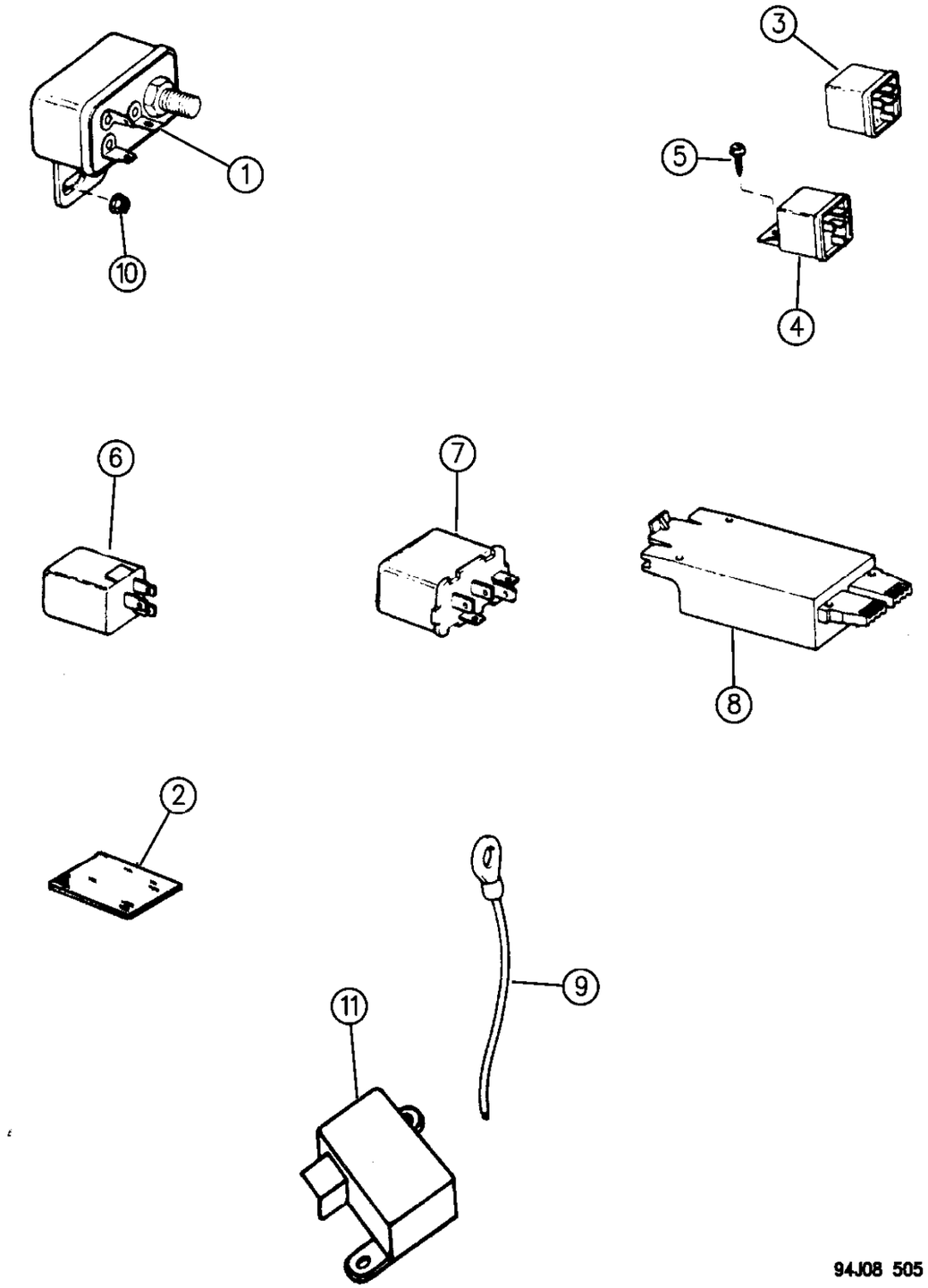

ITEM	PART NUMBER	QTY	BODY	MODEL	DESCRIPTION
1	4638 094	1			RELAY, Starter
2	J368 9091	1			FASTENER, Velcro Hook
3	4638 094	1			RELAY, A/C Clutch, Fuel Pump, Idle Speed Control
4	5600 6846	AR			RELAY, Fog Lamp & Headlamp
5	1150 2843	1			SCREW
6	4638 094	1			RELAY, Horn-Fuel-Auto-Shutdown
7	5600 5146				RELAY, Heated Glass
8		1			MODULE, Intermittent Wiper (Illus. 405)
9	J813 3785	1			LINK, Fusible, 14 Gauge
10	1150 2702	2			NUT
11	5600 4262	1			MODULE, Daytime Running Lights, Canada
-	5600 6846				RELAY, Turn Sig. Flasher
-	5600 6771				RELAY, A.B.S.

MODEL CODES:

72=2 DR Wagon
74=4 DR Wagon
77=Open Body 93" Whlbase
78=Open Body 103" Whlbase - Export
T=2WD
J,N=4WD
U=4WD (RHD)

BODY STYLES:

YJ=Wrangler (4X4) "S"
Weangler (4X4) SE
Wrangler (4X4) Sahara
Wrangler (4X4) Renegade

XJ=Cherokee SE
Cherokee Sport
Cherokee Country

ZJ=Grand Cherokee SE
Grand Cherokee Laredo
Grand Cherolee Limited
ZG=Grand Cherokee European

Y1=Wrangler
X1=Cherokee
Z1=Grand Cherokee
KDX=Vehicles

AR = Use as Required - = Non Illustrated Part P.A.R. = Paint as Required

« RETURN TO GROUP INDEX

RELAYS CHEROKEE--GRAND CHEROKEE
Figure 8-510

8-510B

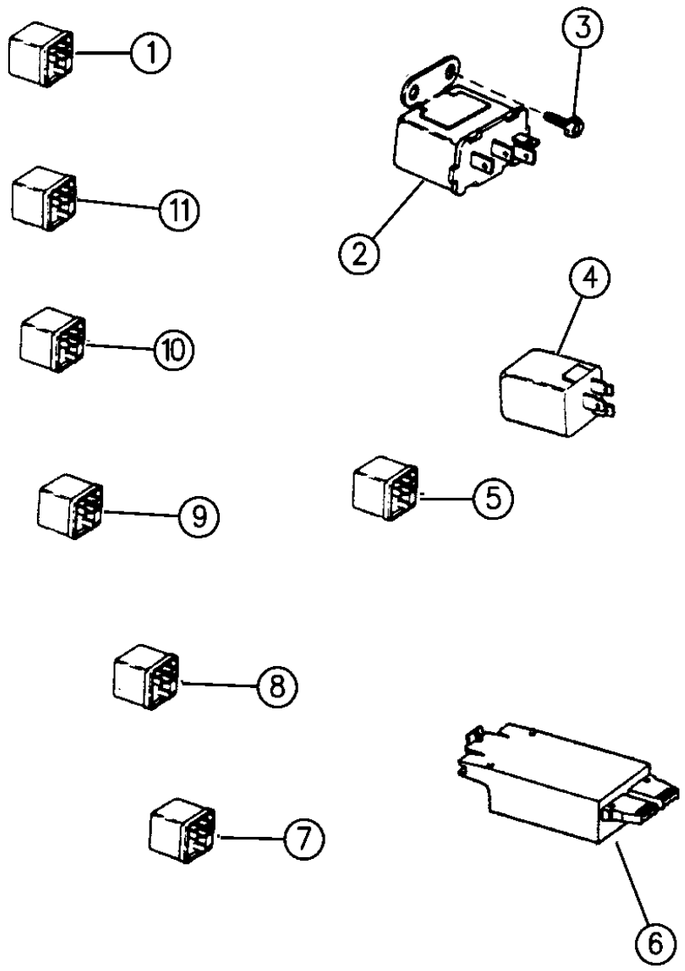

ITEM	PART NUMBER	QTY	BODY	MODEL	DESCRIPTION
1	4638 271	1	XJ		Relay, Starter Relay, w/Diesel Eng. EUROPE also used Ballast Resistor By-Pass ***
2	5601 7446	1	X1		BRACKET, Relay, KDX - China
3	4638 094	1	XJ		RELAY, Headlamp & Dash Wiring
4	5600 7081	1	XJ		MODULE, Headlamp
-	4437 394				MODULE, Daytime Running Lamp
5	3420 2329	1			NUT, Push
6	4638 094	1	XJ		RELAY, Horn, Sun Roof
7	3300 1301	1			TIMER, Glow Plug Control, EUROPE
8	1150 2843	AR			SCREW
9	5600 5146	1			RELAY, Heated Glass
10	3420 2358	1			SCREW
11		1			MODULE, Interm. Wiper,
	5600 6957		XJ		1994-96
	5600 7192		ZJ		1994-96
12	J368 9091	1	XJ		FASTENER, Velcro Hook
13	5600 0636	1	XJ		RELAY, Headlamp Delay
14	J941 7855	1			SCREW
15	5600 0636	1	XJ		RELAY, Headlamp Delay
16	4638 094	1			RELAY, Anti-Diesel--Fuel Pump--A/C--Throttle Control--Oxygen Sensor--Illumination--Idle Speed Control--Trailer Tow (Includes Bracket) (Stmpd. 83507045
	4638 094	1	XJZJ		RELAY, Illuminated Entry
-	4638 094	AR	ZJ		RELAY, Blower Fan Motor w/A.T.C.
	5600 6846	3	XJ,ZJ		RELAY w/Trailer Tow ***
17	1150 2843	2	XJ		SCREW
	3420 1996	2	XJ		EUROPE
18	3300 3934		XJ		RELAY, 4 Cyl., KDX-China (4-Term.)
	5300 4798	1			(3-Term.) EUROPE
19	5600 6771	1	XJ,ZJ		RELAY, ABS Motor
20	3420 1169	2			NUT, Hex, w/Diesel Eng., EUROPE
21	3420 1208	2	XJ		RIVET
22	4638 271	1			RELAY, Cooling Fan, 6 Cyl., w/Hev. Duty Cooling
	4638 271	1			Glow Plug Control, w/Diesel, EUROPE
23	5300 4489	1	X1		BRACKET, Relay, KDX
24	5600 2298	1	X1		COVER, Relay, KDX
25	4638 094	AR	ZJ		RELAY, Trailer Tow--Starter--A/C Clutch--Fog Lamp--Fuel Pump--Auto. Shutdown--Anti-Lock Brake (Stamped 56006709)
26	5266 230	1	ZJ		RELAY, Horn
27	3600 3031	1	ZJ		RELAY, Power Antenna
28	5600 6846	AR	ZJ		RELAY, Micro Plug
	5600 6846	AR	XJ		

MODEL CODES:

72=2 DR Wagon
74=4 DR Wagon
77=Open Body 93" Whlbase
78=Open Body 103" Whlbase - Export
T=2WD
J,N=4WD
U=4WD (RHD)

BODY STYLES:

YJ=Wrangler (4X4) "S"
Weangler (4X4) SE
Wrangler (4X4) Sahara
Wrangler (4X4) Renegade
XJ=Cherokee SE
Cherokee Sport
Cherokee Country
ZJ=Grand Cherokee SE
Grand Cherokee Laredo
Grand Cherolee Limited
ZG=Grand Cherokee European
Y1=Wrangler
X1=Cherokee
Z1=Grand Cherokee
KDX=Vehicles

AR = Use as Required - = Non Illustrated Part P.A.R. = Paint as Required

RELAYS CHEROKEE--GRAND CHEROKEE
Figure 8-510

8-510B

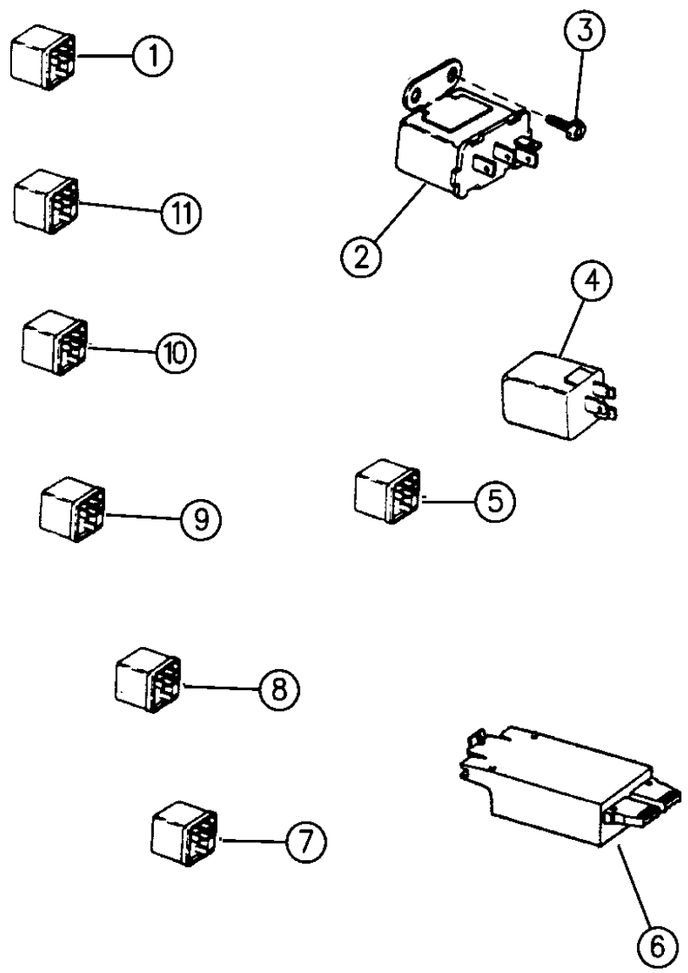

ITEM	PART NUMBER	QTY	BODY	MODEL	DESCRIPTION
29	5600 5146	1	XJ,ZJ		RELAY, Backlite
-					RELAY, Fog Lamp
	4638 271			XJ	1994-96
	4638 271			ZJ	1994
	4608 650			ZJ	1995-96
-	4638 094	1			RELAY, Illuminated Entry
-		1			RELAY/MODULE (Serviced w/Keyless Entry Module) ***
-	2889 565	AR			RELAY, Ignition Lamp Thermal Time Delay

MODEL CODES:

72=2 DR Wagon
74=4 DR Wagon
77=Open Body 93" Whlbase
78=Open Body 103" Whlbase - Export
T=2WD
J,N=4WD
U=4WD (RHD)

BODY STYLES:

YJ=Wrangler (4X4) "S"
Weangler (4X4) SE
Wrangler (4X4) Sahara
Wrangler (4X4) Renegade
XJ=Cherokee SE
Cherokee Sport
Cherokee Country
ZJ=Grand Cherokee SE
Grand Cherokee Laredo
Grand Cherolee Limited
ZG=Grand Cherokee European
Y1=Wrangler
X1=Cherokee
Z1=Grand Cherokee
KDX=Vehicles

AR = Use as Required - = Non Illustrated Part P.A.R. = Paint as Required

CONTROL UNITS AND SENSORS
Figure 8-605

8-605B

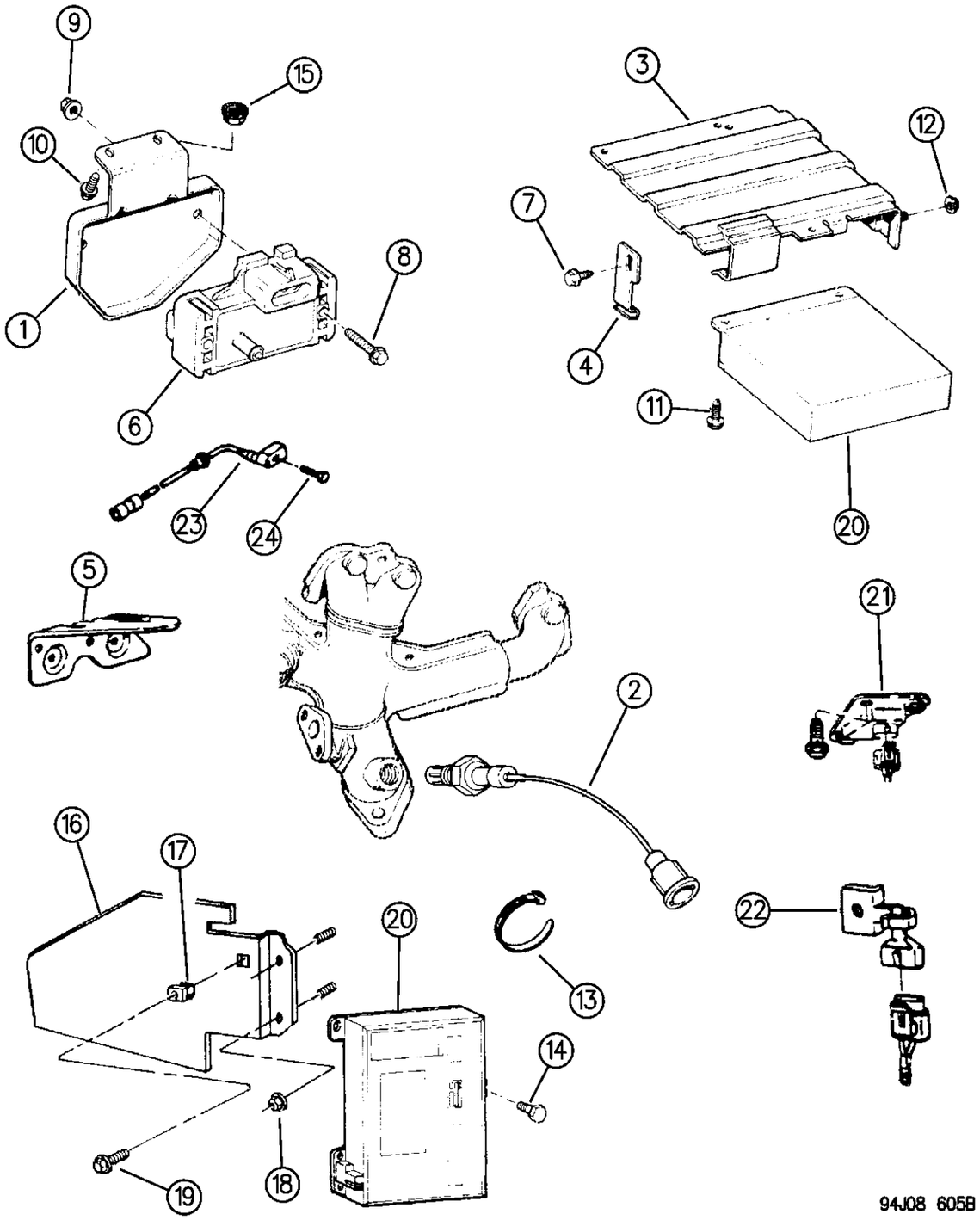

ITEM	PART NUMBER	QTY	BODY	MODEL	DESCRIPTION
1	5600 5971	1	YJ,XJ		BRACKET, M.A.P. Sensor, w/4 Cyl. Engine
2					OXYGEN SENSOR ***
	5602 8200	1	YJ,XJ		4 Cyl. w/12" Pigtail
	5600 5925	1	YJ,XJ		6 Cyl. w/18" Pigtail (Plug 56017711) 1994
	5602 7916		XJ		1996 4.0L Engine
	5602 6827	1	ZJ		6 Cyl. w/22" Pigtail (Oxygen Sensor-J1930) (1994-95)
	5602 8603	1	ZJ		1996, 6-Cyl. w/22" Pigtail
	5602 7917				1996, 318 Eng.
	5602 7917		XJ		1996 2.5L Engine
	5602 8301		ZJ		318 Eng. (Mounting Clip 56026785) 1993-95
-		1			SENSOR, Oxygen (After Catalyst) 12" DBL Shield
	5604 1006		ZJ		1996 w/12" Pigtail ***
	5604 1005		XJ		2.5L & 4.0L Engines
-	5604 1000		XJ		Bracket, Oxgen Sensor
-	6034 456	AR			Screw, Oxgen Sensor Mounting
-	6504 313	AR	ZJ		Clamp
-	5601 7862	1	ZJ		PLUG, Oxygen Sensor, w/Leaded Fuel
	5602 6785				CLIP, Sensor Mounting (Bracket Type)
	5300 7638	1	YJ,XJ		4 Cyl. w/4 Hole Zirconium
	5601 7711		XJ,J		Gas Eng.
3	5300 4000	1	YJ		BRACKET
4	5300 3421	1	YJ		BRACKET
5	5534 5971	1	XJ		BRACKET, Microprocessor Mounting Upper (6 Cylinder)
6		1			SENSOR, M.A.P.
					2.5L & 4.0L Engine
	3300 0153		XJX1		1994-95
	3300 0153		YJY1		1994-95
	3300 0153		ZJZ1		1994-95
	5602 8303		XJX1		1996
	5602 8303		ZJZGZ1		1996
					5.2L Engine
	5602 6770		ZJ,ZG		
-	5602 7080	1			BRACKET, Map Sensor
7	J400 1701	1			SCREW
8	S150 7041	2			BOLT
9	3420 1461	2			NUT
10	J812 0054	2			SCREW
11	T300 1369	3	YJ		SCREW
12	J400 5704	2	YJ		NUT
13	J322 3227	1			STRAP, Tie
14	1150 3059	3	XJ		SCREW
15	3420 1358	2	XJ		NUT

MODEL CODES:

72=2 DR Wagon
74=4 DR Wagon
77=Open Body 93" Whlbase
78=Open Body 103" Whlbase - Export
T=2WD
J,N=4WD
U=4WD (RHD)

BODY STYLES:

YJ=Wrangler (4X4) "S"
Weangler (4X4) SE
Wrangler (4X4) Sahara
Wrangler (4X4) Renegade
XJ=Cherokee SE
Cherokee Sport
Cherokee Country
ZJ=Grand Cherokee SE
Grand Cherokee Laredo
Grand Cherolee Limited
ZG=Grand Cherokee European
Y1=Wrangler
X1=Cherokee
Z1=Grand Cherokee
KDX=Vehicles

AR = Use as Required - = Non Illustrated Part P.A.R. = Paint as Required

8-605B

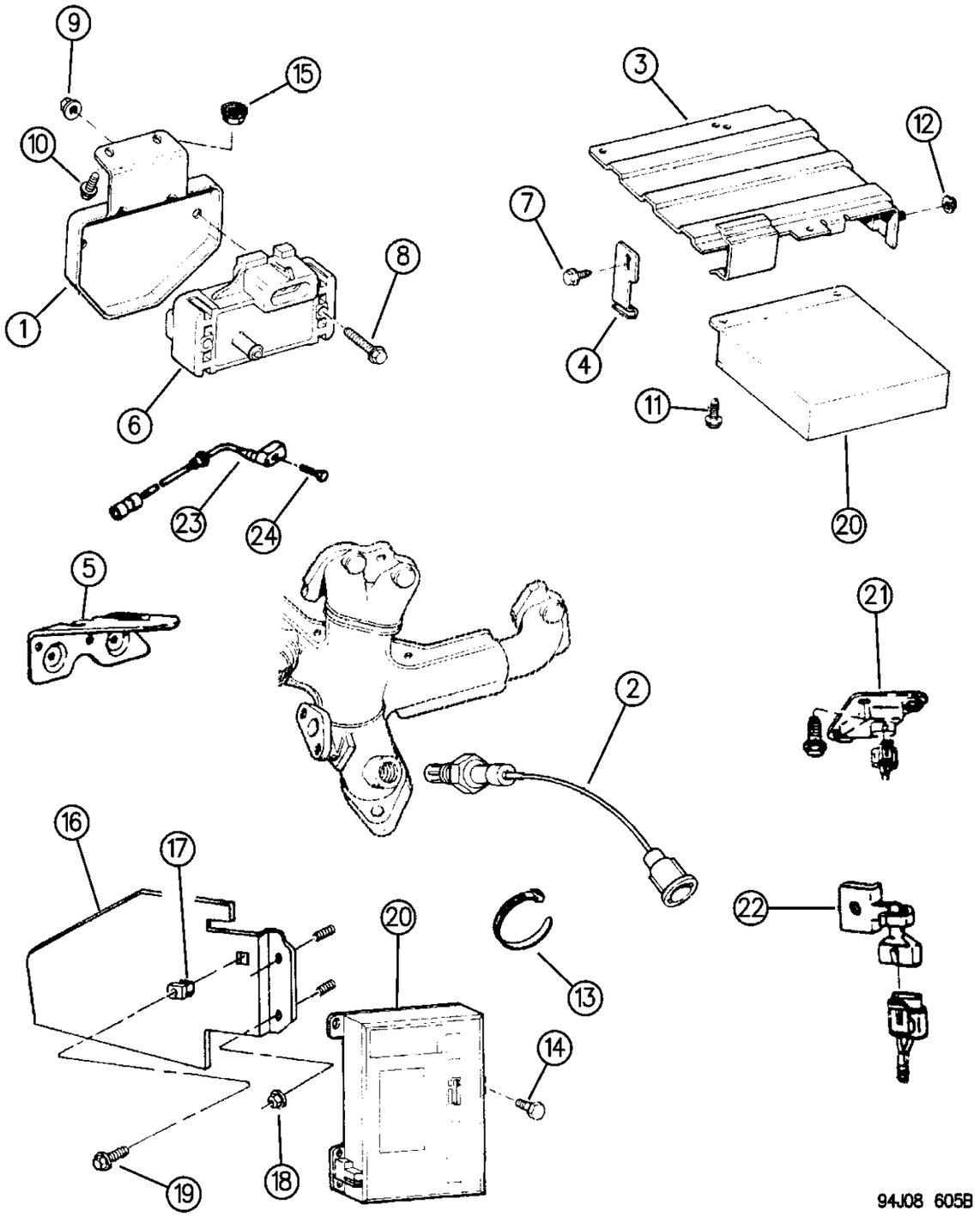

ITEM	PART NUMBER	QTY	BODY	MODEL	DESCRIPTION
16	5600 5706	1	ZJ		BRACKET
17	J400 4959	3	ZJ		NUT
18	3420 1680	3	ZJ		NUT
19			ZJ		SCREW, (Not Serv.)
20					SINGLE BOARD ENGINE CONTROL, (See Illus. 705-710-715) ***
21	5600 7097	2	ZJ		SENSOR, Air Bag
22	4688 204	1	XJ,X1		SENSOR, Ambient Air
	5600 9232				jUMPER, Ambient Temp Sensor ***
	5503 6214		ZJ		
	5600 5557		ZJ		In-Cab 1994-95
	5503 6393	1			In Cab 1996
-	5503 5501	1	ZJ,ZG		SENSOR, A.T.C. Sun
-	5535 6774		ZG		SENSOR, ATC Aspirator, RHD, EUROPE
23		1			SENSOR, Wheel Speed (Rear)
	5602 6930		ZJ		1994-95 (Right)
	5602 6931		ZJ		1994-95 (Left)
	5200 5932		XJ		1994-1996 right rear ***
	5200 5933		XJ		1994-1996 left rear ***
	5602 7722		ZJ		1996 (Right)
	5602 7723		ZJ		1996 (Left)
24	8350 4920	2			SCREW
-	5602 7825	1			SENSOR, Vehicle Speed
-	5202 7505				SENSOR, Coolant Level
	6503 520	AR			SCREW, Sensor Mounting
-		1			SENSOR, Crankshaft Position
	5602 7865		XJ		4.0L Engine, with Sales Code XCY
	5602 6882		YJ,XJ		2.5L & 4.0L Engine
	5602 7611				2.5L Turbo Diesel
	5602 7280		YJ		Auto. Trans.
	5602 7280		ZJ		4.0 Eng., 42RE Elec. Shift Trans.
	5602 7272		ZJ		318 Eng.
-	5604 1008	1			SHIELD, Sensor Cover
-	6503 520	2			SCREW & WASHER (Sensor to Bell Hsg.) ***
-	3420 2536	AR			STUD
-	J305 0116	2			BOLT
-			ZJ		SENSOR, Auto. Headlamp
	5600 5995				1994-95
	5600 8759				1996
-					SENSOR, Throttle Position
	4778 463		ZJZGZ1		8 cylinder Engine
					2.5L & 4.0L Engine ***
	4761 871AB		ZJXJYJ		Weber

MODEL CODES:

72=2 DR Wagon
74=4 DR Wagon
77=Open Body 93" Whlbase
78=Open Body 103" Whlbase - Export
T=2WD
J,N=4WD
U=4WD (RHD)

BODY STYLES:

YJ=Wrangler (4X4) "S"
Weangler (4X4) SE
Wrangler (4X4) Sahara
Wrangler (4X4) Renegade
XJ=Cherokee SE
Cherokee Sport
Cherokee Country
ZJ=Grand Cherokee SE
Grand Cherokee Laredo
Grand Cherolee Limited
ZG=Grand Cherokee European
Y1=Wrangler
X1=Cherokee
Z1=Grand Cherokee
KDX=Vehicles

AR = Use as Required - = Non Illustrated Part P.A.R. = Paint as Required

8-605B

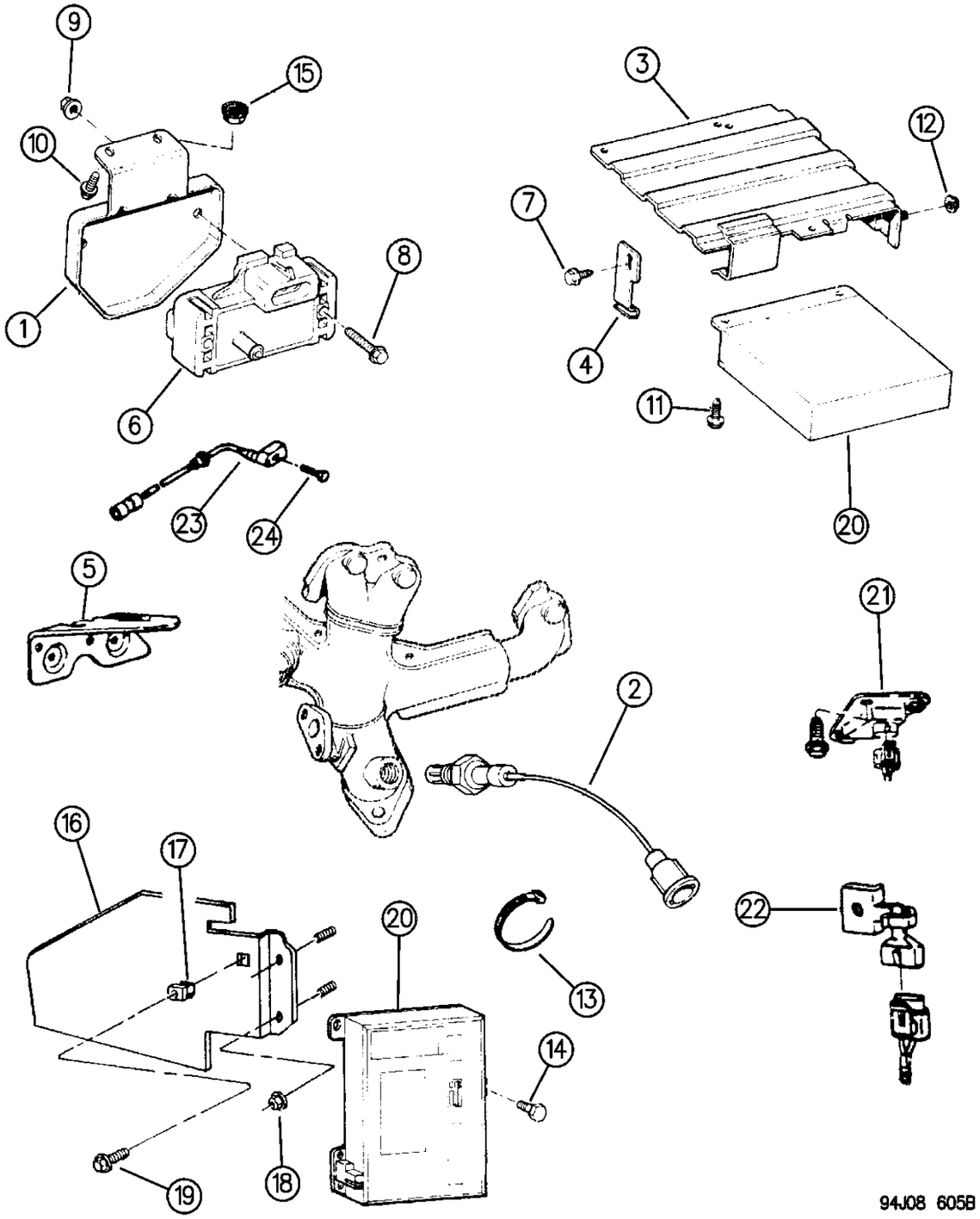

ITEM	PART NUMBER	QTY	BODY	MODEL	DESCRIPTION
	4874 371		ZJXJYJ		Webber w/UpgradedObd-II Connectors
-					SENSOR, Intake Air Temp., 4.0-5.2 Eng.
	3300 4280				1994-95
	5269 756				1996
-	5207 9198		Y1		SENSOR, Coolant Temp. (RHD), EUROPE
-	5207 9197		Y1		PIPE, Temp. Sensor, (RHD) EUROPE ***
-	3300 4281	1	XJ,Zj,y		SENSOR,Coolant Temperature
-	5602 7332	1	ZJ,XJ		SENSOR, Battery Temperature
-	5602 7315	1	ZJ		CONTROLLER, Speed Proportional Steering LHD
-	5305 4440	1	ZG		CONTROLLER, Speed Proportional Steering RHD
-	5503 5501	1	ZJ		SENSOR, A.T.C. Sun

MODEL CODES:

72=2 DR Wagon
74=4 DR Wagon
77=Open Body 93" Whlbase
78=Open Body 103" Whlbase - Export
T=2WD
J,N=4WD
U=4WD (RHD)

BODY STYLES:

YJ=Wrangler (4X4) "S"
Weangler (4X4) SE
Wrangler (4X4) Sahara
Wrangler (4X4) Renegade

XJ=Cherokee SE
Cherokee Sport
Cherokee Country

ZJ=Grand Cherokee SE
Grand Cherokee Laredo
Grand Cherolee Limited
ZG=Grand Cherokee European

Y1=Wrangler
X1=Cherokee
Z1=Grand Cherokee
KDX=Vehicles

AR = Use as Required - = Non Illustrated Part P.A.R. = Paint as Required

SINGLE BOARD ENGINE CONTROLLERS (POWERTRAIN CONTROL MODULE) YJ
Figure 8-705

8-705A

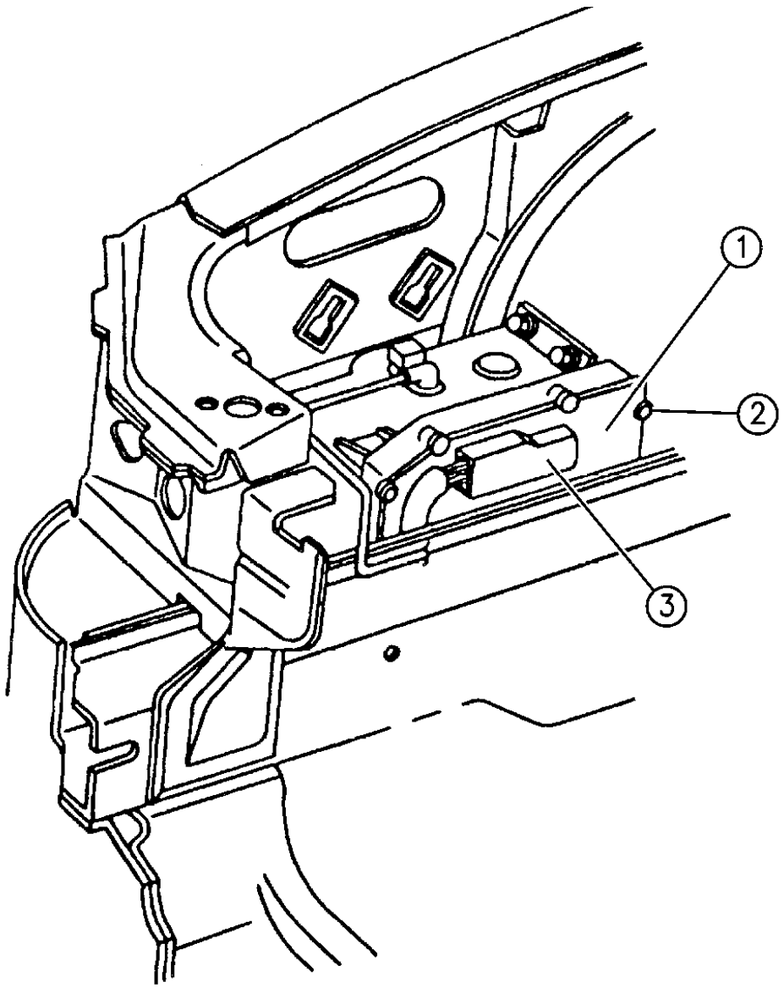

94J08 705A

ITEM	PART NUMBER	QTY	BODY	MODEL	DESCRIPTION
1					SINGLE BOARD ENGINE CONTROL MODULE ***
					NOTE: RFI=RADIO NOISE SUPPRESSION
	5602 7579	1	YJ		4.0 Eng., Man. Trans., RFI
	5602 8837				1995
	5602 7589	1	YJ		4.0 Eng., Man. Trans., Unleaded Fuel, EUROPE
	5602 8839				1995
	5602 7684	1	YJ		4.0 Eng., Auto. Trans., w/RFI
	5602 7680				1995 Federal and California
	5602 7686	1	YJ		4.0 Eng., Auto. Trans., RFI, EUROPE
	5602 7676				1995
	5602 7284	1	YJ		4.0 Eng., Auto. Trans., Calif.
	5602 7682				1995 Export
	5602 7781		YJ		4.0 Eng., Man. Trans., E.S.A. w/o Catalyst, Leaded Fuel, EUROPE
	5602 8841				1995
	5602 7577	1	YJ		2.5 Eng., Man. Trans., RFI, EUROPE
	5602 7544				1995
	5602 7575	1	YJ		2.5 Eng., Man. Trans., RFI
	5602 8829				1995
	5602 8202	1	YJ		2.5 Eng., Auto. Trans.
	5602 8833				1995
	5602 8204	1	YJ,Y1		2.5 Eng., Auto. Trans., Leaded Fuel
	5602 8835				1995
2	J400 4959				SCREW, Mtg.
3					COVER, Not Serv.
-	4419 492				INSULATOR, S.B.E.C.

MODEL CODES:

72=2 DR Wagon
74=4 DR Wagon
77=Open Body 93" Whlbase
78=Open Body 103" Whlbase - Export
T=2WD
J,N=4WD
U=4WD (RHD)

BODY STYLES:

YJ=Wrangler (4X4) "S"
Weangler (4X4) SE
Wrangler (4X4) Sahara
Wrangler (4X4) Renegade
XJ=Cherokee SE
Cherokee Sport
Cherokee Country
ZJ=Grand Cherokee SE
Grand Cherokee Laredo
Grand Cherolee Limited
ZG=Grand Cherokee European
Y1=Wrangler
X1=Cherokee
Z1=Grand Cherokee
KDX=Vehicles

AR = Use as Required - = Non Illustrated Part P.A.R. = Paint as Required

« RETURN TO GROUP INDEX

SINGLE BOARD ENGINE CONTROLLERS (POWERTRAIN CONTROL MODULE) XJ
Figure 8-710

8-710A

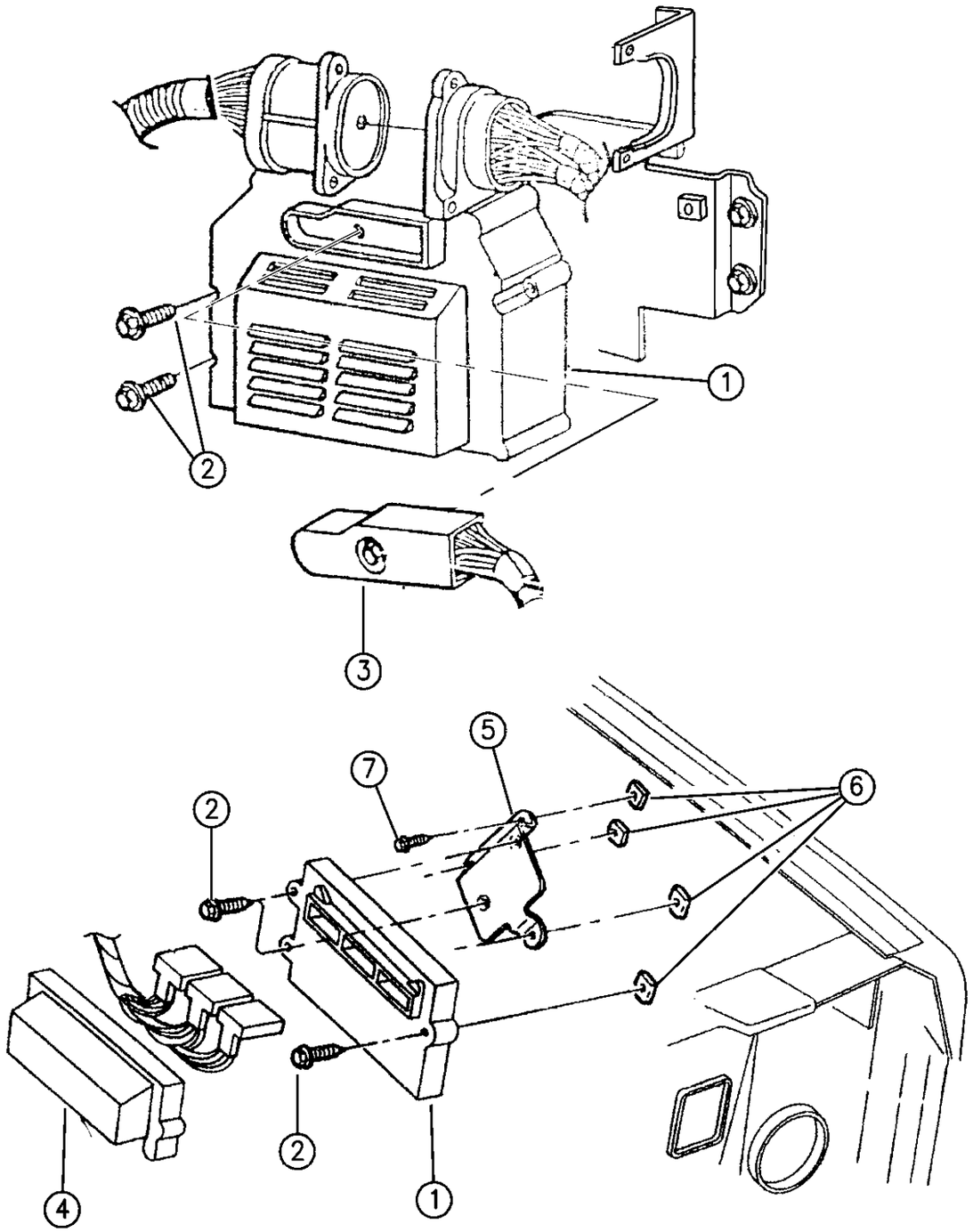

ITEM	PART NUMBER	QTY	BODY	MODEL	DESCRIPTION
1					SINGLE BOARD ENGINE CONTROL MODULE (SBEC/JTEC) ***
					NOTE: RFI=RADIO NOISE SUPPRESION
		1	XJ		2.5 Eng., Man. Trans. RFI
	5602 7884				1994
	5602 8843				1995
	5604 3175				1996
	5604 3174				1996 California
		1	XJ		2.5 Eng., Man. Trans., EUROPE
	5602 7886				1994
	5604 3175				1996
		1	XJ		2.5 Eng., Auto. Trans., RFI
	5602 8820				1994
	5602 8848				1995
		1	XJ		2.5 Eng., Auto. Trans., LEADED FUEL, RFI
	5602 7882				1994
	5604 1379				1996
	5604 1179				1996 EUROPE
	5604 3176	1	XJ		2.5 Eng., Manual Trans., Leaded Fuel (1996)
		1	XJ		4.0 Eng., Man. Trans., RFI
	5602 7890				1994
	5602 8852				1995
	5604 1248				1996
		1	XJ		4.0 Eng., Man. Trans., RFI, EUROPE
	5602 7894				1994
	5604 3200				1996
		1	XJ		4.0 Eng., Auto. Trans., RFI
	5602 7888				1994
	5602 7698				1995
	5602 7696				1995 w/Police Pkg.
	5604 1199				1996
	5604 3202				1996 w/Police Pkg.
	5602 7892	1	XJ		4.0 Eng., Auto. Trans., RFI, EUROPE
		1	XJ		4.0 Eng., Auto. Trans., Calif.
	5603 0118				1994
	5602 7698				1995
	5604 1199				1996
		1	XJ		4.0 Eng. Gas, Man. Trans., Leaded Fuel, w/RFI, EUROPE
	5602 7783				1994
	5604 3198				1996
		1	XJ		4.0 Eng. Gas, Auto. Trans., Leaded Fuel, w/RFI, EUROPE
	5602 7785				1994
	5604 3201				1996

MODEL CODES:

72=2 DR Wagon
74=4 DR Wagon
77=Open Body 93" Whlbase
78=Open Body 103" Whlbase - Export
T=2WD
J,N=4WD
U=4WD (RHD)

BODY STYLES:

YJ=Wrangler (4X4) "S"
Weangler (4X4) SE
Wrangler (4X4) Sahara
Wrangler (4X4) Renegade

XJ=Cherokee SE
Cherokee Sport
Cherokee Country

ZJ=Grand Cherokee SE
Grand Cherokee Laredo
Grand Cherolee Limited
ZG=Grand Cherokee European

Y1=Wrangler
X1=Cherokee
Z1=Grand Cherokee
KDX=Vehicles

AR = Use as Required - = Non Illustrated Part P.A.R. = Paint as Required

SINGLE BOARD ENGINE CONTROLLERS (POWERTRAIN CONTROL MODULE) XJ
Figure 8-710

8-710A

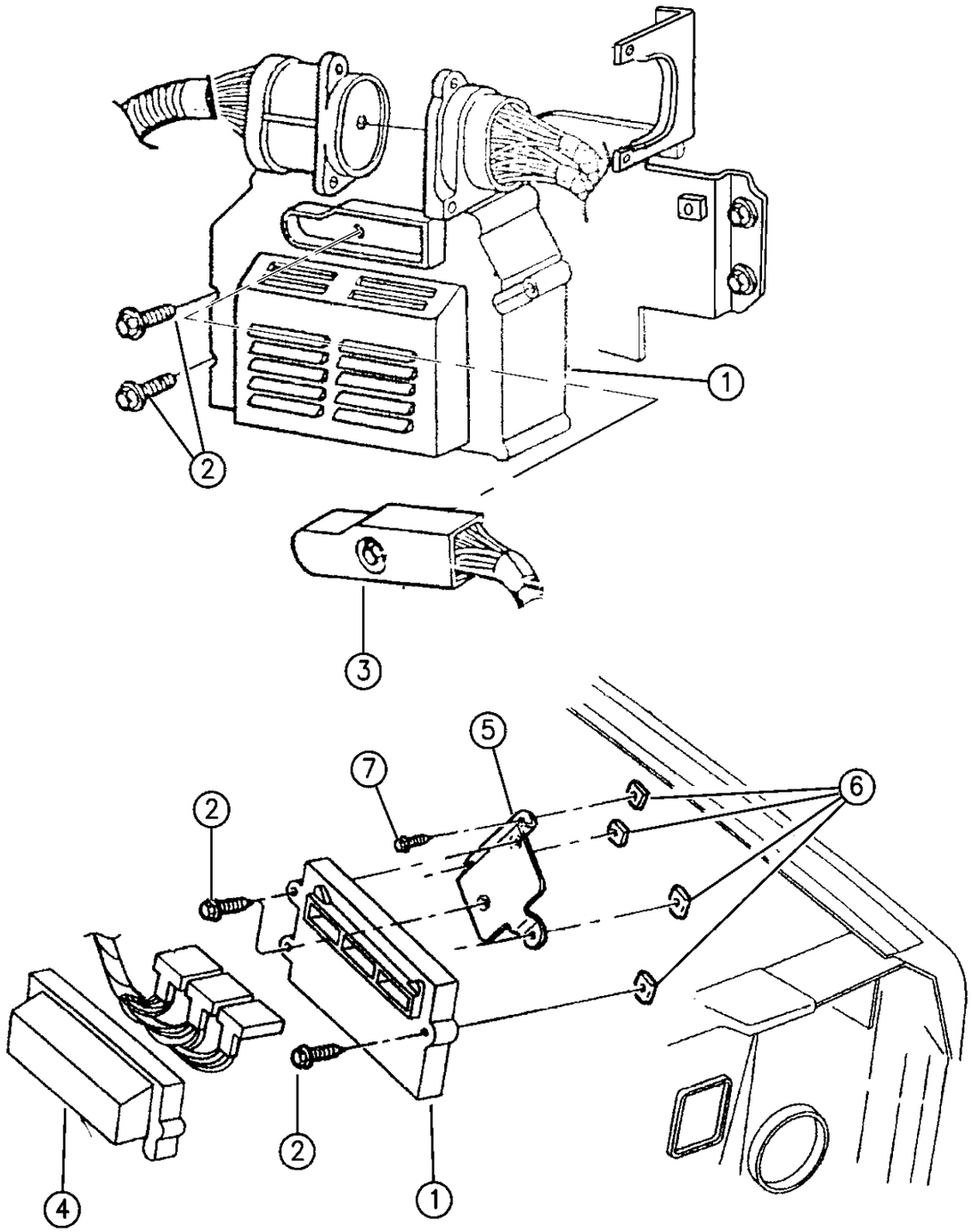

ITEM	PART NUMBER	QTY	BODY	MODEL	DESCRIPTION
					Diesel
	5604 1081	1	XJ		1995
	5604 1082				1995 w/EFTA Markets
	5602 9110				1996
-	5602 7252	1			BRACKET, SBEC (Diesel)
2					SCREW, Mtg., Not Serv.
3					COVER, Not Serv.
-	4419 492		XJ		INSULATOR, S.B.E.C.
4	5603 8455	1			SHIELD, JTEC
5	5604 1044	1			BRACKET, JTEC Module
6	J400 4959	AR			NUT
7	0154 552	AR			SCREW & WASHER ASSEMBLY ***

MODEL CODES:

72=2 DR Wagon
74=4 DR Wagon
77=Open Body 93" Whlbase
78=Open Body 103" Whlbase - Export
T=2WD
J,N=4WD
U=4WD (RHD)

BODY STYLES:

YJ=Wrangler (4X4) "S"
Weangler (4X4) SE
Wrangler (4X4) Sahara
Wrangler (4X4) Renegade
XJ=Cherokee SE
Cherokee Sport
Cherokee Country
ZJ=Grand Cherokee SE
Grand Cherokee Laredo
Grand Cherolee Limited
ZG=Grand Cherokee European
Y1=Wrangler
X1=Cherokee
Z1=Grand Cherokee
KDX=Vehicles

AR = Use as Required - = Non Illustrated Part P.A.R. = Paint as Required

SINGLE BOARD ENGINE CONTROLLERS (POWERTRAIN CONTROL MODULE) ZJ
Figure 8-715

8-715B

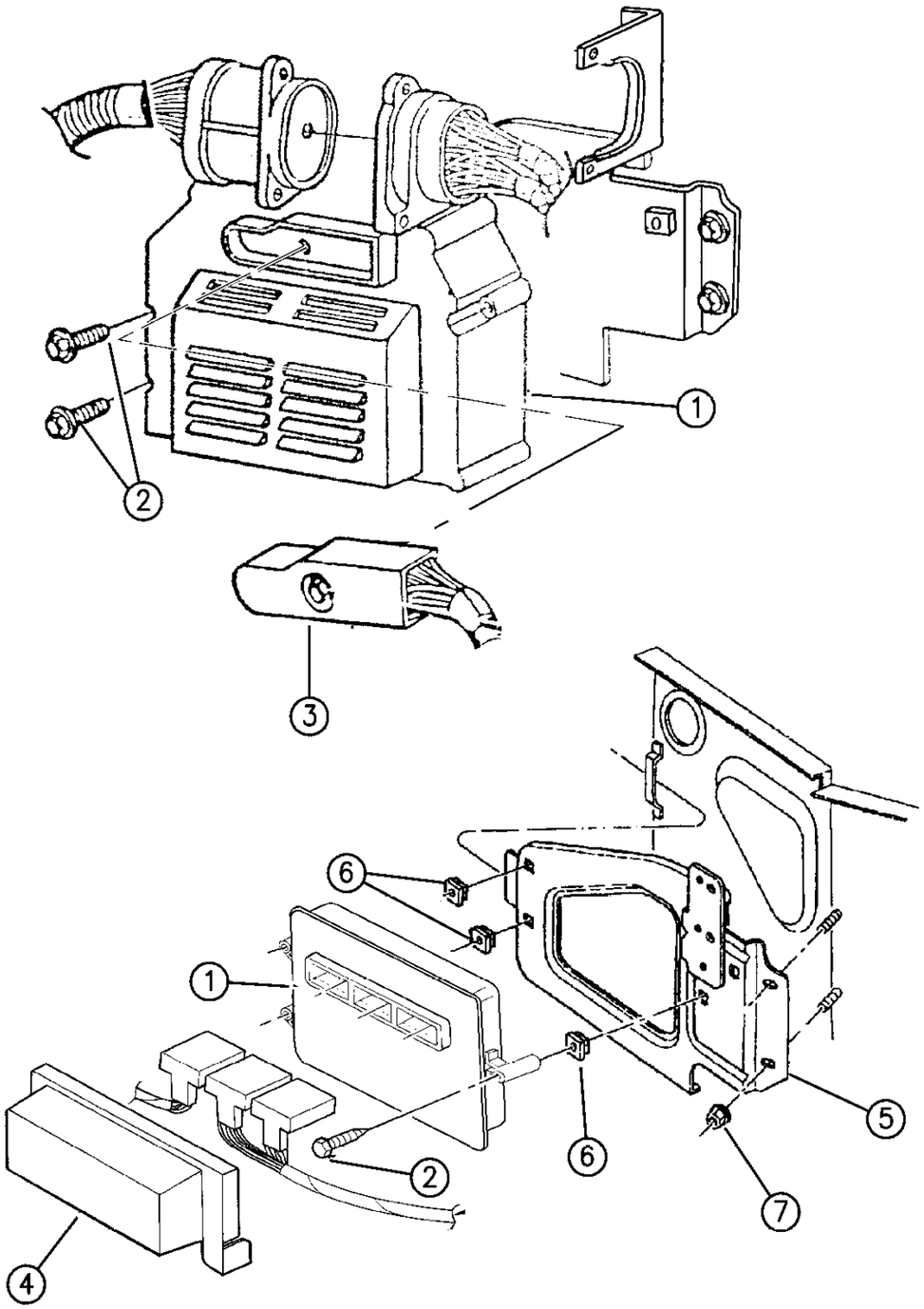

ITEM	PART NUMBER	QTY	BODY	MODEL	DESCRIPTION
1		1			SINGLE BOARD ENGINE CONTROL MODULE ***
					1994 4.0L Engine w/Automatic Transmission
	5602 8311				Federal or High Altitude w/o Export Equipment Pkg.
	5602 8313				California
	5602 7901				Federal (Leaded Fuel) w/Export Equipment Pkg. Stamped# 56027900
					1994 4.0L Engine w/Manual Transmission
	5602 7899				Federal or High Altitude w/o Export Equipment Pkg.
	5602 7899				California
	5602 8288				Federal (Leaded Fuel) w/Export Equipment Pkg.
					1994 5.2L Engine w/Automatic transmission
	5602 8113				Federal or High Altitude (w/o Export Pkg.) Stamped# 56028112
	5602 8115				Federal or High Altitude w/Export Pkg.
	5602 8591				w/Leaded Fuel
					1995 4.0L Engine w/Automatic Transmission
	5602 8029				Federal w/Export Equipment Pkg.
	5602 8027				Federal w/o Export Equipment Pkg.
	5602 8031				California
	5602 8033				w/Leaded Fuel
					1995-96 4.0L Engine w/Manual Transmision
	5602 7708				Federal
	5602 7712				w/Leaded Fuel
					1995 5.2L Engine w/Automatic Transmission
	5604 1879				Federal w/Export Equipment Pkg.
	5602 7550				Federal or High Altitude w/Export Equipment Pkg.
	5602 6790				Federal or High Altitude w/o Export Equipment Pkg.
	5602 6794				w/Leaded Fuel
	5602 8512				2.5L Turbo Diesel w/5 Speed Manual Transmission (EUROPE)
	5604 1172				1996, 4.0 Eng., Auto. Trans., Federal
	5604 1206				1996, 4.0 Eng., Auto. Trans, Calif.
	5604 1169				1996, 318 Eng.
	5604 1262		ZG		1996 , 4.0L Engine w/Automatic Trans.(Federal Emission Pkg. ***
	5604 1263		ZG		1996, 4.0L Engine w/Automatic Trans. (Leaded Fuel Emission) ***
	5604 1170		ZG		1996, 5.2L Engine w/Automatic Trans. (Federal Emission) ***
	5604 1171		ZG		1996, 5.2L Engine w/Automatic Trans (Leaded Fuel Emission) ***
	5602 9111		ZG		1996, 4 Cylinder Diesel Engine w/Manual Trans. ***
2					SCREW, Mtg., Not Serv.
3					COVER, Not Serv
-	5600 5706				BRACKET, S.B.E.C. Mtg.
	5305 4230		ZG		RHD, EUROPE
-	4419 492				INSULATOR, S.B.E.C.
4	5603 8455	1			SHIELD, JTEC Module

MODEL CODES:

72=2 DR Wagon
74=4 DR Wagon
77=Open Body 93" Whlbase
78=Open Body 103" Whlbase - Export
T=2WD
J,N=4WD
U=4WD (RHD)

BODY STYLES:

YJ=Wrangler (4X4) "S"
Weangler (4X4) SE
Wrangler (4X4) Sahara
Wrangler (4X4) Renegade
XJ=Cherokee SE
Cherokee Sport
Cherokee Country
ZJ=Grand Cherokee SE
Grand Cherokee Laredo
Grand Cherolee Limited
ZG=Grand Cherokee European
Y1=Wrangler
X1=Cherokee
Z1=Grand Cherokee
KDX=Vehicles

AR = Use as Required - = Non Illustrated Part P.A.R. = Paint as Required

SINGLE BOARD ENGINE CONTROLLERS (POWERTRAIN CONTROL MODULE) ZJ
Figure 8-715

8-715B

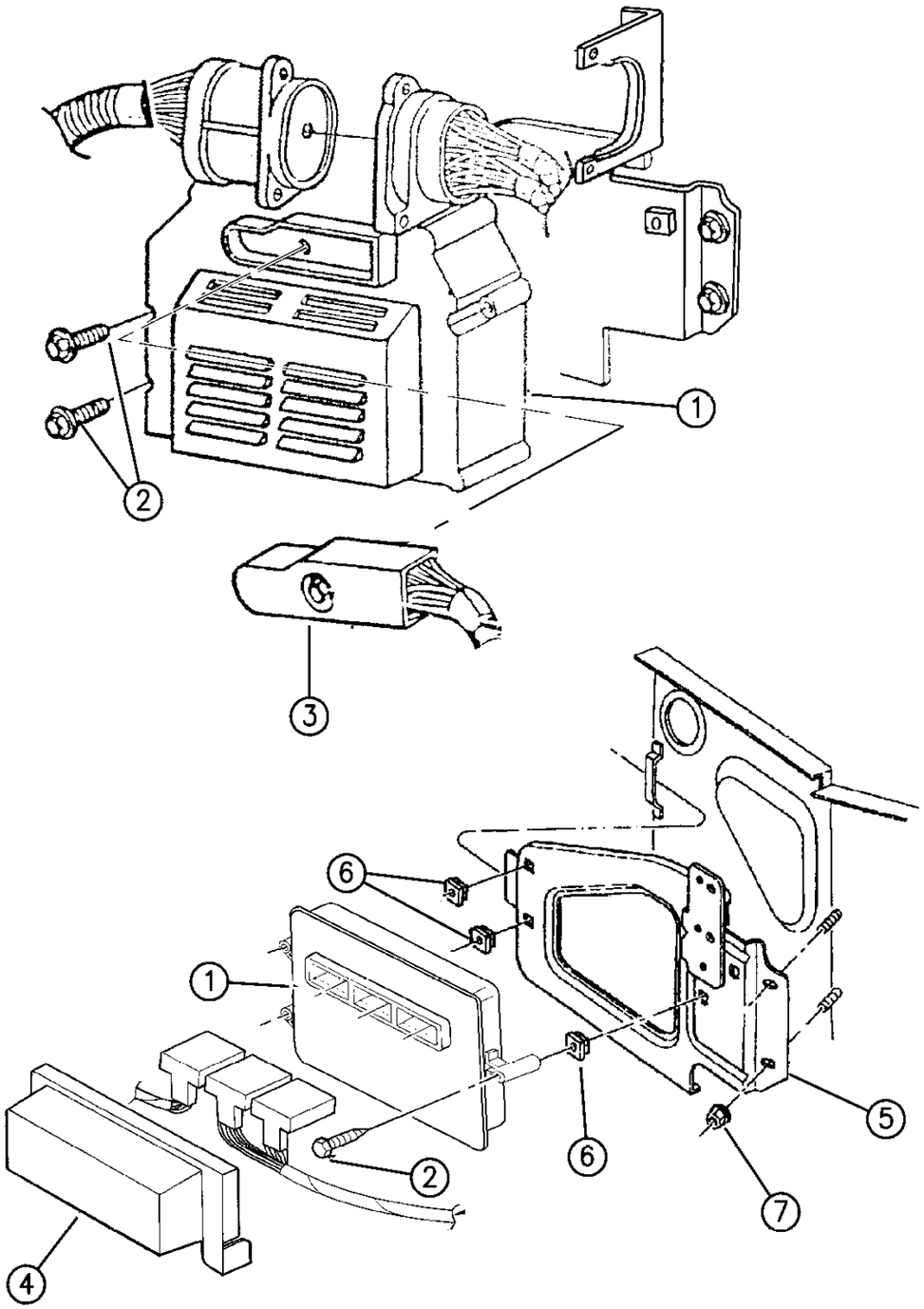

ITEM	PART NUMBER	QTY	BODY	MODEL	DESCRIPTION
5	5602 7599	1			BRACKET, JTEC Module
6	J400 4959	AR			NUT
7	6503 102	AR			NUT & WASHER ASSEMBLY ***

MODEL CODES:

72=2 DR Wagon
74=4 DR Wagon
77=Open Body 93" Whlbase
78=Open Body 103" Whlbase - Export
T=2WD
J,N=4WD
U=4WD (RHD)

BODY STYLES:

YJ=Wrangler (4X4) "S"
Weangler (4X4) SE
Wrangler (4X4) Sahara
Wrangler (4X4) Renegade
XJ=Cherokee SE
Cherokee Sport
Cherokee Country
ZJ=Grand Cherokee SE
Grand Cherokee Laredo
Grand Cherolee Limited
ZG=Grand Cherokee European
Y1=Wrangler
X1=Cherokee
Z1=Grand Cherokee
KDX=Vehicles

AR = Use as Required - = Non Illustrated Part P.A.R. = Paint as Required

SWITCHES AND SENDING UNITS ALL MODELS
Figure 8-810

8-810C

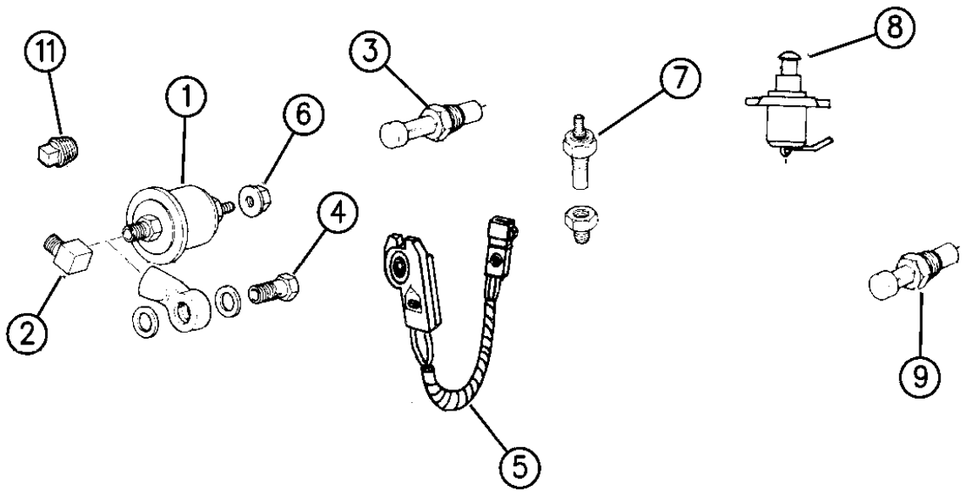

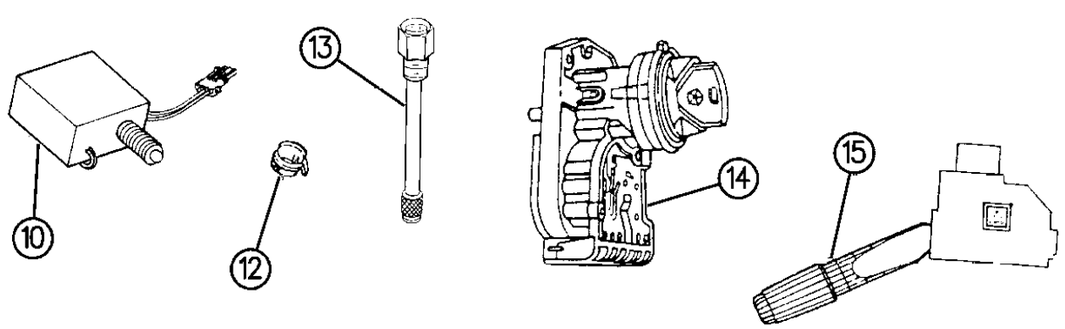

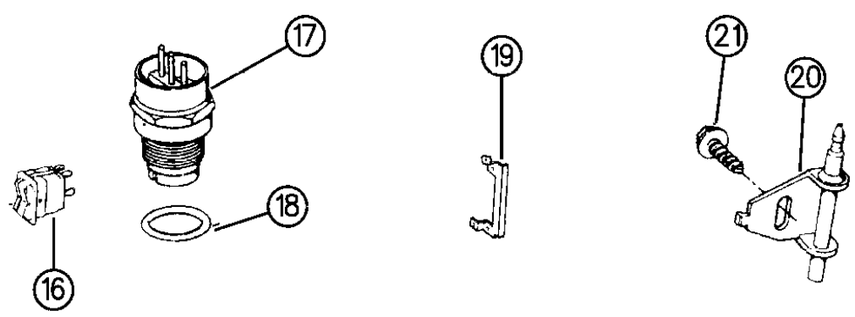

94J08 810

ITEM	PART NUMBER	QTY	BODY	MODEL	DESCRIPTION
1		1			SENDING UNIT, Oil Pressure
	5602 6779		ZJYJ		1994-95 (1-Terminal)
	5602 6779		XJ		1994-96
	5602 7250		XJ		1994-95 (Diesel)
	5603 1003		ZJZG		1996
	5603 1003		XJ		1996 (Diesel)
	5602 6781		XJ		EUROPE
2	J400 6600		X1		FITTING, 4 Cyl., KDX-China
	J321 2002	1	YJXJZJ		6 Cyl. Eng.
	J093 4001		YJ,XJ		90 Degree
3	5602 6719		XJ		SWITCH, Oil Pressure (Warning Light Low Oil Pressure)
	J575 8695	1	X1		KDX, China
	5602 7250				w/2.5l Turbo Diesel
4	3300 2464	1	XJ		ADAPTER, Oil Pressure Sending Unit
5		4			SWITCH, Door Courtesy Lamp
	5600 2221	AR	YJ		1994-95
	4687 558	AR	YJ		1996
	4373 296		XJ		
	4687 558		ZJ		1994 w/Courtesy Lamp (Below Panel)
	5600 7300		ZJ		1994-96 w/Vehicle Information Center
6	J066 7526	1			BOLT, Adapter, EUROPE
7					SWITCH, Disarm
	5600 5864	1	X1		Door, Lt.
	5600 5865		X1		Door, Rt.
	5600 6834-5	1	ZJ		Doors
	5600 6971	1	ZJ		Liftgate
8	J027 1169	1			NUT
9	J324 3136	2	XJ		GASKET, Diesel Eng., EUROPE
10	5300 1936	1	XJ		ADAPTER, Diesel Eng., EUROPE
11		1	YJXJZJ		SWITCH, Eng. Temp., w/Warning Lamp, Also Diesel(I n Rear Of Cyl. Head)
	5602 6710				1994-96
		1	YJXJZJ		W/Gauges
	5602 7012				1994-95
	5602 7012		XJ		1996
	5600 4815		ZJ		1996
		1	YJ,XJ		Also Diesel (Insul. 56006431)
	5602 7012				1994-96
12	5252 559		XJ,ZJ		SWITCH, Disarm (Hood)
		4	ZJ		Door Ajar ***
	5600 6889				1994
	5600 7300				1995-96

MODEL CODES:

72=2 DR Wagon
74=4 DR Wagon
77=Open Body 93" Whlbase
78=Open Body 103" Whlbase - Export
T=2WD
J,N=4WD
U=4WD (RHD)

BODY STYLES:

YJ=Wrangler (4X4) "S"
Weangler (4X4) SE
Wrangler (4X4) Sahara
Wrangler (4X4) Renegade
XJ=Cherokee SE
Cherokee Sport
Cherokee Country
ZJ=Grand Cherokee SE
Grand Cherokee Laredo
Grand Cherolee Limited
ZG=Grand Cherokee European
Y1=Wrangler
X1=Cherokee
Z1=Grand Cherokee
KDX=Vehicles

AR = Use as Required - = Non Illustrated Part P.A.R. = Paint as Required

SWITCHES AND SENDING UNITS ALL MODELS
Figure 8-810

8-810C

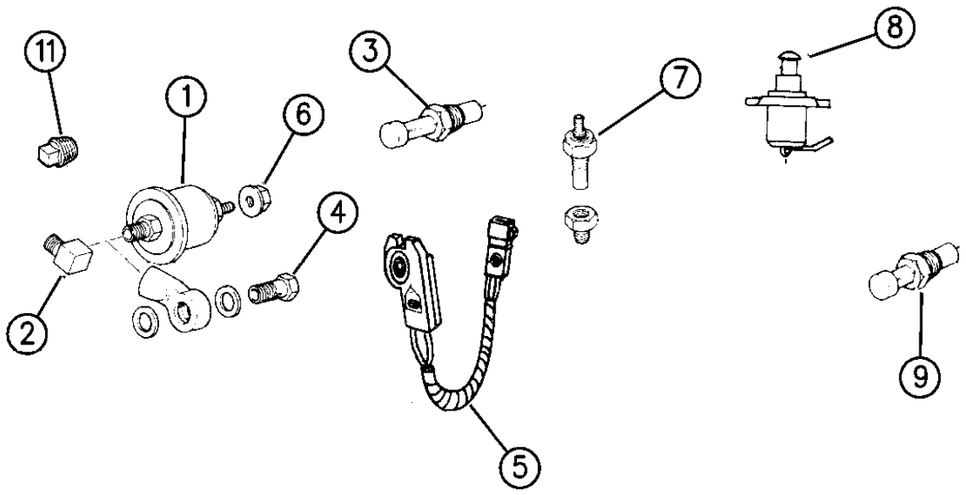

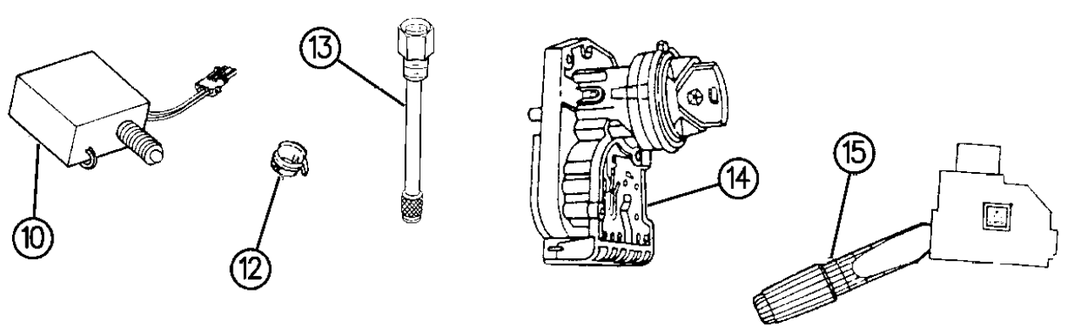

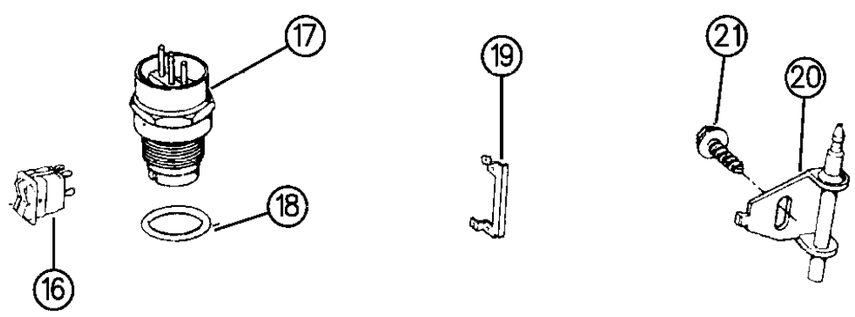

94J08 810

ITEM	PART NUMBER	QTY	BODY	MODEL	DESCRIPTION
	5600 2221	AR	YJ		1994-95
	4687 558	AR	YJ		1996
13	5600 4743	1	X1		BRACKET, Hood Disarm Switch, KDX
14	3300 4281	1	JYXJZJ		SENSOR, Coolant Temp. (In Thermostat Housing) (Use Insul. 4414901)
	5600 4815	1	ZJ		5.2L Engine
15		1			SWITCH, Multi-Function Turn Signal & Wiper
	4728 424		ZJ		1994-95 w/Tilt
	5600 7523		ZJ		1996 w/Tilt
	5600 7523		ZJ		w/o Tilt
	4728 424	1	XJ		w/ or w/o tilt 95-96 ***
	4778 760		XJ		w/o Intermittent Wiper (w/ or w/o Tilt)
	5600 7299		YJ		1994-95 w/Tilt, w/Auto. or Manual Trans. (Intermittent Wiper)
	5600 7298		YJ		1994-95 w/Tilt & Manual Trans. (Intermittent Wiper)
	5600 0031		YJ		1994-95 w/o Tilt & w/Manual Trans. (2 Speed Wiper)
16	J010 3877	1	YJXJZJ		PLUG, Oil Sending Unit
17	6031 704	1	YJXJZJ		CLIP, Stop Lamp Switch to Bracket
18	5602 7061	1	ZJ		SENSOR, Eng. Oil, w/Vehicle Maintenance Monitor (In Oil Pan)
19					SWITCH, Ignition Starter
	4797 401		ZJ		1994-96 (Up to 6/15/96)
	5602 1346		ZJ		1996 After 06/15/96
	J325 0576		XJ,YJ		1994 w/o Tilt
	J325 0575		XJ,YJ		1994 w/Tilt
	4797 401		XJ		1995-96 (1996 Up to 6/15/96)
	5602 1346		XJ		After 6/15/96
	J325 0576		YJ		1995 w/o Tilt
	J325 0575		YJ		1995 w/Tilt
	4419 594	1	XJ		WIRING PACKAGE, Ignition Repair ***
20		1			SWITCH, Stop Lamp
	5600 6981		XJ		
	4565 240		ZJ		
	5600 6247		YJ		
-	5600 6861		YJ		SWITCH, Defogger
-	5600 2384		YJ		SWITCH, Fog Lamp
	5600 3541		YJ		EUROPE
-	5500 3005		YJ		COVER, Switch
-					SWITCH, Rear Wiper
	5600 6733		YJ		1994-95
	5600 5318		ZJ		w/Overdrive Switch/Heated Backlight (Right Side POD Switch)
	5600 9224		ZJZGZ1		w/o Heated Seats 1996
	5600 9225		ZJZGZ1		w/Heated Seats & w/Automatic Transmission 1996
	5600 9221		ZG		w/Heated Seat & w/Manual Transmission

MODEL CODES:

72=2 DR Wagon
74=4 DR Wagon
77=Open Body 93" Whlbase
78=Open Body 103" Whlbase - Export
T=2WD
J,N=4WD
U=4WD (RHD)

BODY STYLES:

YJ=Wrangler (4X4) "S"
Weangler (4X4) SE
Wrangler (4X4) Sahara
Wrangler (4X4) Renegade
XJ=Cherokee SE
Cherokee Sport
Cherokee Country
ZJ=Grand Cherokee SE
Grand Cherokee Laredo
Grand Cherolee Limited
ZG=Grand Cherokee European
Y1=Wrangler
X1=Cherokee
Z1=Grand Cherokee
KDX=Vehicles

AR = Use as Required - = Non Illustrated Part P.A.R. = Paint as Required

SWITCHES AND SENDING UNITS ALL MODELS
Figure 8-810

8-810C

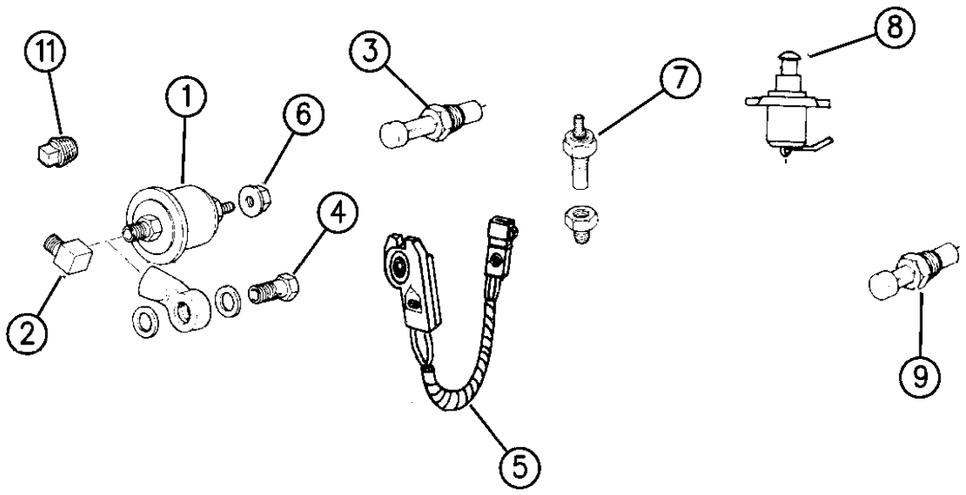

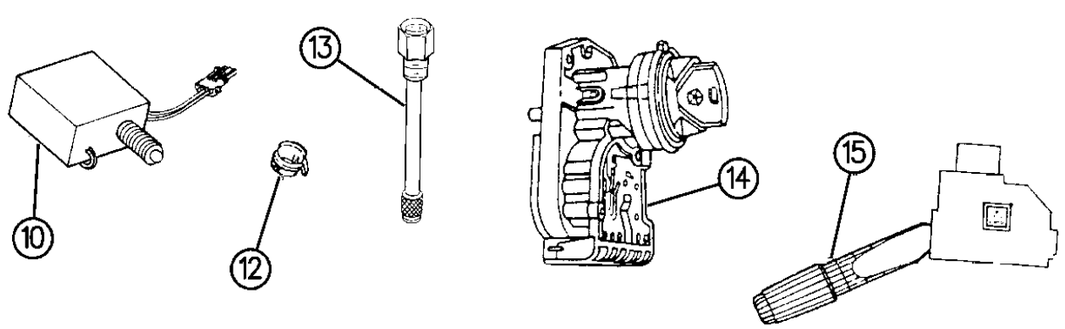

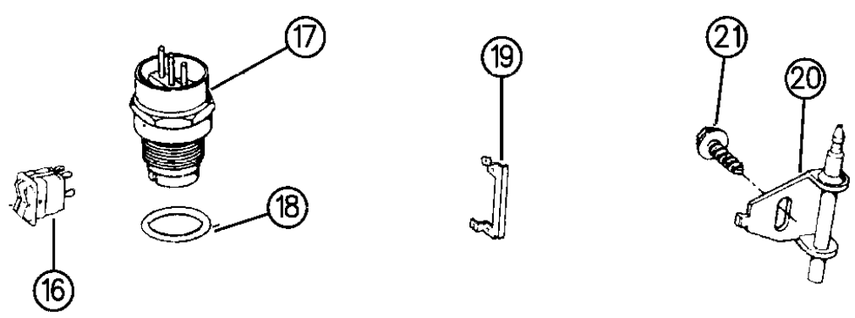

94J08 810

ITEM	PART NUMBER	QTY	BODY	MODEL	DESCRIPTION
-	4057 750		YJXJZJ		SWITCH, Neutral Saftey
-	2408 143				GASKET
-		1			SWITCH, Headlamp
	5600 7334		XJ		
	5600 3119		YJ		
-					SCREW, Not Serv.
-	5600 1864		YJ		RHEOSTAT
-	5501 3336				BRACKET
-	J323 2194				SWITCH, Park Brake Warning Lamp
-	J812 0054				SCREW
-	5600 0031		XJ		SWITCH, Windshield Wiper/Wash
	5600 7298		XJ		w/Intermittent
-			ZJ		SWITCH, POD, Headlamp/Rear Fog Lp./Headlamp Leveling (Left)
	5600 4969				1994-95 With Foglamps
	5600 4959		ZJ,Z1		1994-95 Without Foglamps
					1996
	5600 9212		ZJ,Z1		w/Automatic H/Lamp & w/Fog Lamps
	5600 9213		ZJ,Z1		w/Fog Lamps & w/o Automatic H/Lamp
	5600 9214		ZJ,Z1		w/Automatic H/Lamp & w/o Fog Lamps
	5600 9215		ZJ,Z1		w/o Automatic H/Lamp & w/o Fog Lamps
	5600 9217		ZG		w/Fog Lamp & w/o H/Lamp Leveling
	5600 9218		ZG		w/o Fog Lamp & w/o H/Lamp Leveling
	5600 9219		ZG		w/Fog Lamp & w/ H/Lamp Leveling
	5600 9220		ZG		w/H/Lamp Leveling / w/o Fog Lamp
	5600 6999		ZJ		Headlamp/Rear Fog Lamp
-	4762 285		ZJ		SWITCH, Temp. Sensor, MIDEAST
-	4762 283		ZJ		FITTING, Temp. Switch Sensor, MIDEAST
-			XJ		SWITCH, Turn Signal
	5600 7255				1994
	4728 424				1995-96 w/Tilt
	4778 760				1995-96 w/o Tilt

MODEL CODES:

72=2 DR Wagon
74=4 DR Wagon
77=Open Body 93" Whlbase
78=Open Body 103" Whlbase - Export
T=2WD
J,N=4WD
U=4WD (RHD)

BODY STYLES:

YJ=Wrangler (4X4) "S"
Weangler (4X4) SE
Wrangler (4X4) Sahara
Wrangler (4X4) Renegade
XJ=Cherokee SE
Cherokee Sport
Cherokee Country
ZJ=Grand Cherokee SE
Grand Cherokee Laredo
Grand Cherolee Limited
ZG=Grand Cherokee European
Y1=Wrangler
X1=Cherokee
Z1=Grand Cherokee
KDX=Vehicles

AR = Use as Required - = Non Illustrated Part P.A.R. = Paint as Required

SWITCHES ALL MODELS
Figure 8-815

8-815B

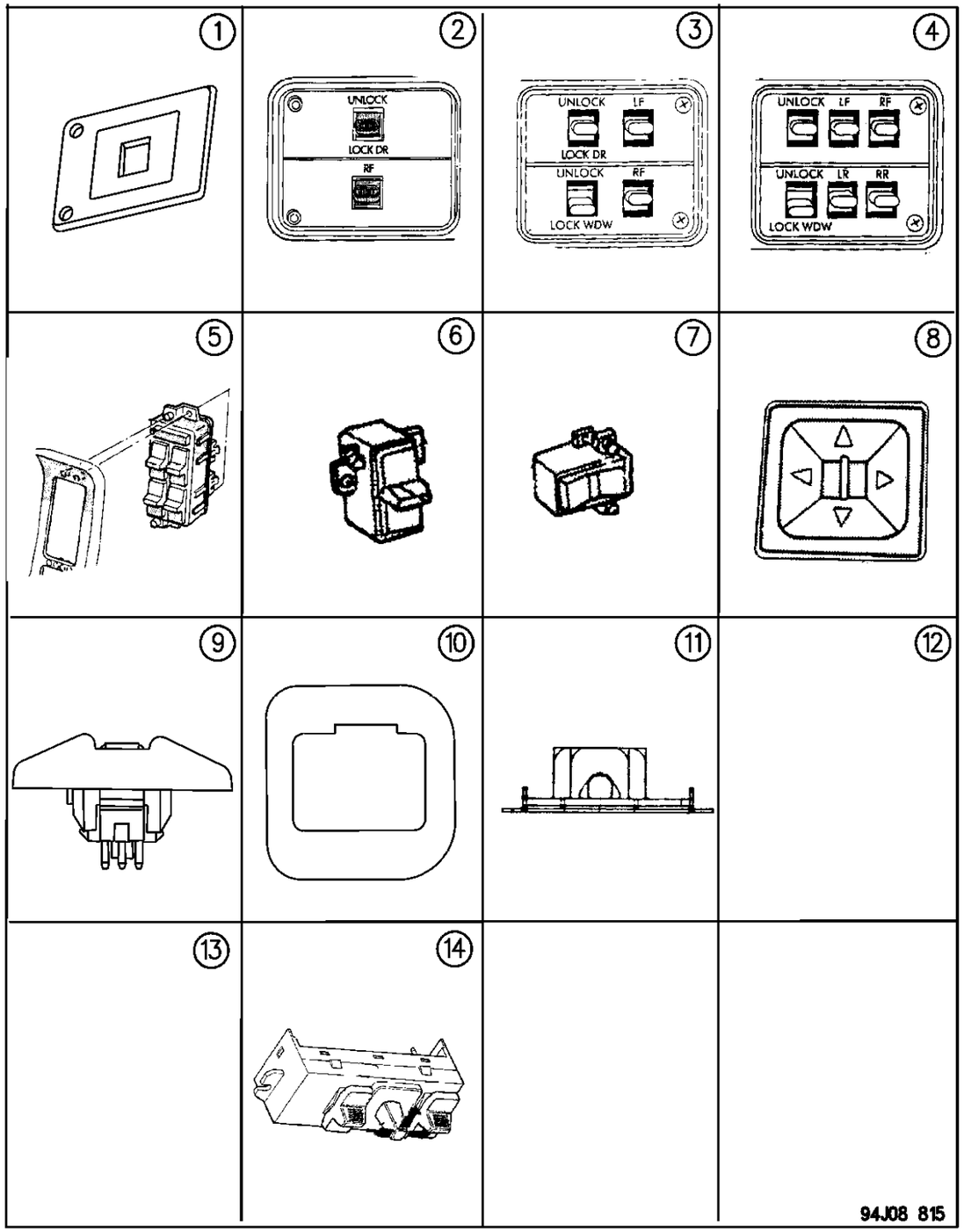

ITEM	PART NUMBER	QTY	BODY	MODEL	DESCRIPTION
1		1			SWITCH & Bezel Assy, 1 gang ***
	5600 7218		X1		Right Front Door
	5600 7218		XJ,X1	74	Right Rear Door
	5600 7218		XJ	74	Right Rear Door (R.H.D.)
	5600 7221		X1		Left Front Door
	5600 7221		XJ,X1	74	Left Rear Door
	5600 7221		XJ	74	Left Rear Door (R.H.D.)
-	J400 6536	AR			CLIP, Switch Attaching
-	5600 7220	AR	XJ,X1	72,74	BEZEL ASSEMBLY, w/o Power Switches (Front or Rear) ***
2		1			SWITCH & BEZEL ASSEMBLY, w/Power Windows & Power Locks, (2-Gang) ***
	5600 7216		XJ,X1		Right Front Door
	5600 7223		XJ,X1		Left Front Door (R.H.D.)
-	5600 9448	AR			CLIP
3		1	XJ,X1	72	SWITCH & BEZEL ASSEMBLY, w/Power Windows & Power Locks (4-Gang) ***
	5600 7210				Right Front Door (R.H.D.)
	5600 7219				Left Front Door
4		1	XJ,X1	74	SWITCH & BEZEL ASSEMBLY, w/Power Windows & Power Locls (6-Gang) ***
	5600 7222				Right Front Door (R.H.D.)
	5600 7217				Left Front Door
5		2	ZJ		SWITCH, Pwr. Window (Front Left)
	5600 7654				1994-95 (5 Gang)
	5604 2141				1996, Pwr. Mirror/Locks/Windows
6		2			SWITCH, Pwr. Window
	5600 7658		ZJ		1994-95 1-Gang (Right Front)
	5604 2140		ZJ		1996 (Front Right) Module
					Rear Door
	5600 6222		ZJ		1994
	5600 7658		ZJ		1995
	5604 2057		ZJ		1996
	5600 7218		XJ		1994-96
	5600 7218		YJ		1994
7	5600 7660	AR	ZJ		SWITCH, Pwr. Door Locks
8		1	ZJ		SWITCH, Pwr. Mirror
	4373 287				1995
					1996 (Serviced w/Power window/Lock Switch Assembly)
9					SWITCH and BEZEL, Pwr. Sunroof ***
	5DT8 3PD5	1	ZJ,Z1		Medium Quartz
	5DT8 3PF4	1	ZJ,Z1		Light Driftwood
	5DT8 3PV4	1	ZJ,Z1		Light Champagne

MODEL CODES:

72=2 DR Wagon
74=4 DR Wagon
77=Open Body 93" Whlbase
78=Open Body 103" Whlbase - Export
T=2WD
J,N=4WD
U=4WD (RHD)

BODY STYLES:

YJ=Wrangler (4X4) "S"
Weangler (4X4) SE
Wrangler (4X4) Sahara
Wrangler (4X4) Renegade
XJ=Cherokee SE
Cherokee Sport
Cherokee Country
ZJ=Grand Cherokee SE
Grand Cherokee Laredo
Grand Cherolee Limited
ZG=Grand Cherokee European
Y1=Wrangler
X1=Cherokee
Z1=Grand Cherokee
KDX=Vehicles

AR = Use as Required - = Non Illustrated Part P.A.R. = Paint as Required

8-815B

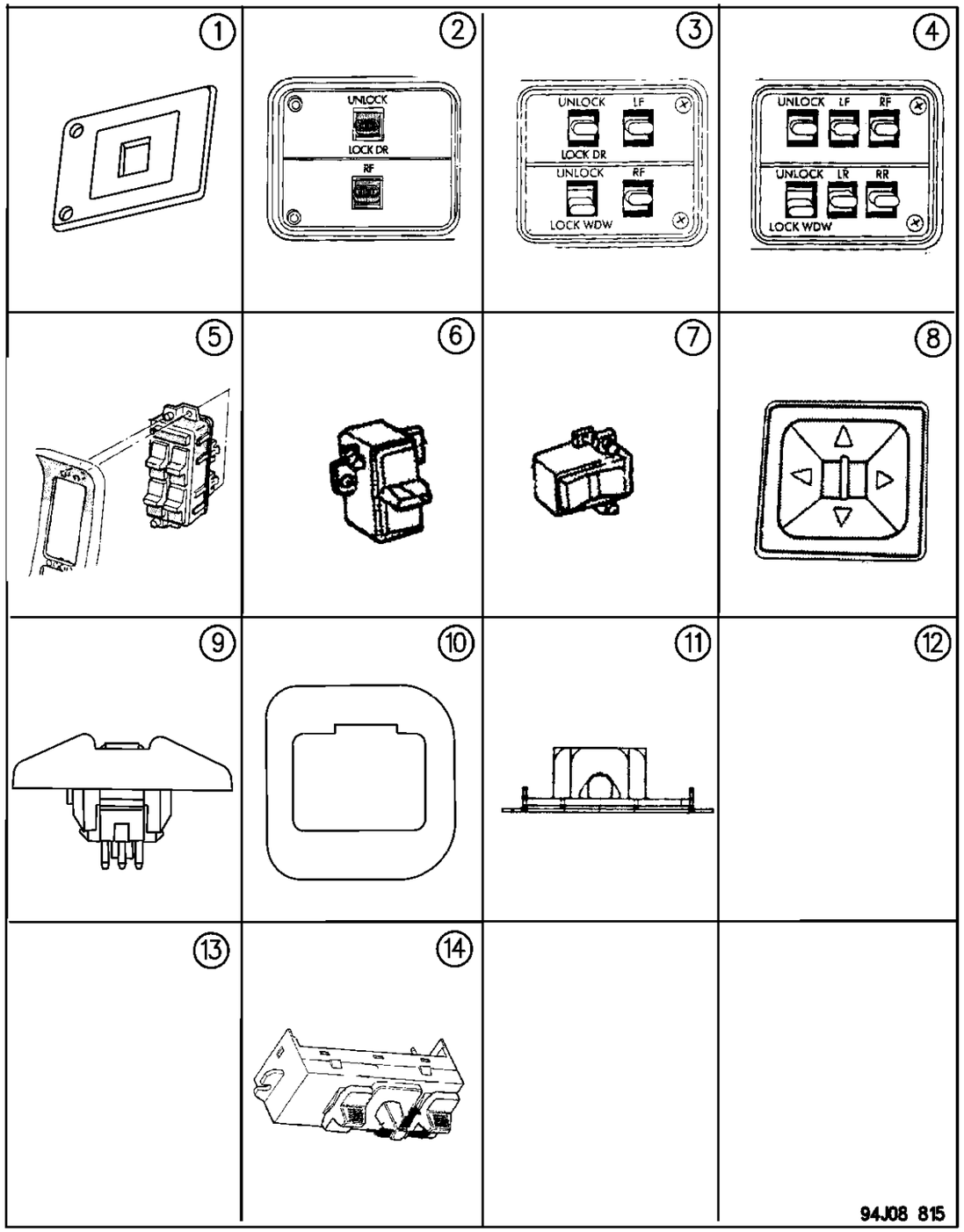

ITEM	PART NUMBER	QTY	BODY	MODEL	DESCRIPTION
	4373 860		ZJ		Power Sunroof, 1-Gang
10	5521 5336	1	ZJ		PLATE, Sun-Roof Switch Brkt. Reinf.
11	5521 5337	1	ZJ		BRACKET, Sun-Roof Switch Mtg.
12	4565 003		ZJ		SWITCH, Hood Ajar
13	4685 271		ZJ		SWITCH, Dome/Overhead Console Reading Lamp
-	4688 581				SWITCH, Compass & Trip
14					SWITCH, Power Seat
	4373 666	2	ZJ		1994-95
	4601 756	1	ZJ		1996 (Right)
	4601 757	1	ZJ		1996 (Left)
	5601 6948	1	XJ		1994 (Right) Chrome
	5601 6949	1	XJ		1994 (Left) Chrome
	4373 666	2	XJ		1995-96
-	4373 860		ZJ		SWITCH, Power Sunroof
-	5600 7712	1			SWITCH, Cruise Control (1196)
-	5600 7272	1	ZJ		SWITCH, Memory
	5603 6818		ZG		RHD, EUROPE
-	PH97 SAZ	1	ZJ, ZG		BEZEL, Memory Switch (Agate)
	PH97 SC3		ZJ,ZG		Mist Gray ***
	PH97 ST6		ZJ,ZG		Spice/Sadle ***
-	5603 6903	1	ZG		SWITCH, Module R.H.D. (Right)
-	5603 6906	1	ZG		SWITCH, Module R.H.D.(Left)
-			ZG		SWITCH PODS, RHD ***
	5603 6830		ZG		w/o Heated Seats, Right, Man. Trans., RHD, EUROPE
	5603 6832		ZG		w/o Heated Seats, Right, Auto. Trans., RHD, EUROPE
	5603 6835		ZG		w/Fog Lamps, w/Headlamp Level, Left, RHD, EUROPE
	5603 6837		ZG		w/Headlamp Level, w/o Fog Lamps, Left, RHD, EUROPE
	5603 6831		ZG		w/Fog Lamps, w/o Headlamp Level, Left, RHD, EUROPE
	5603 6833		ZG		w/o Fog Lamps, w/o Headlamp Level, Left, RHD, EUROPE
	5603 6834		ZG		w/Heated Seats, Auto. Trans., Right, RHD, EUROPE
-	5507 6391	1			SWITCH, Liftgate Limit (w/Handle)
-	5212 7960	1			SWITCH, Parking Brake Indicator Light

MODEL CODES:

72=2 DR Wagon
74=4 DR Wagon
77=Open Body 93" Whlbase
78=Open Body 103" Whlbase - Export
T=2WD
J,N=4WD
U=4WD (RHD)

BODY STYLES:

YJ=Wrangler (4X4) "S"
Weangler (4X4) SE
Wrangler (4X4) Sahara
Wrangler (4X4) Renegade
XJ=Cherokee SE
Cherokee Sport
Cherokee Country
ZJ=Grand Cherokee SE
Grand Cherokee Laredo
Grand Cherolee Limited
ZG=Grand Cherokee European
Y1=Wrangler
X1=Cherokee
Z1=Grand Cherokee
KDX=Vehicles

AR = Use as Required - = Non Illustrated Part P.A.R. = Paint as Required

HORNS ALL
Figure 8-910

8-910A

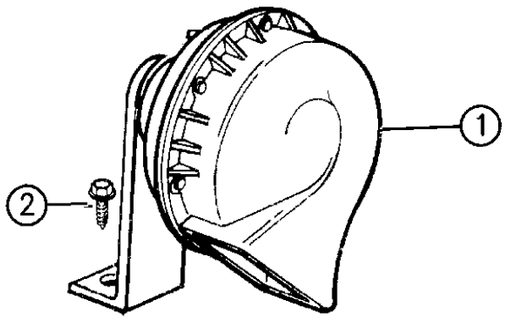

WRANGLER

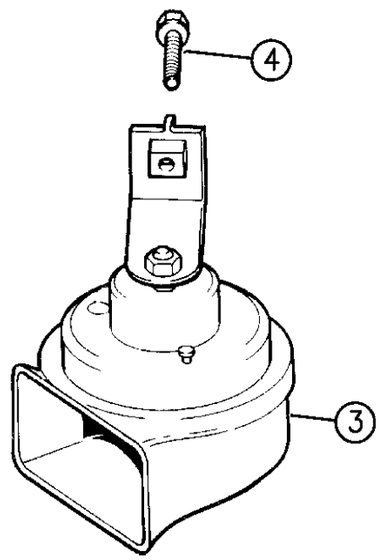

CHEROKEE

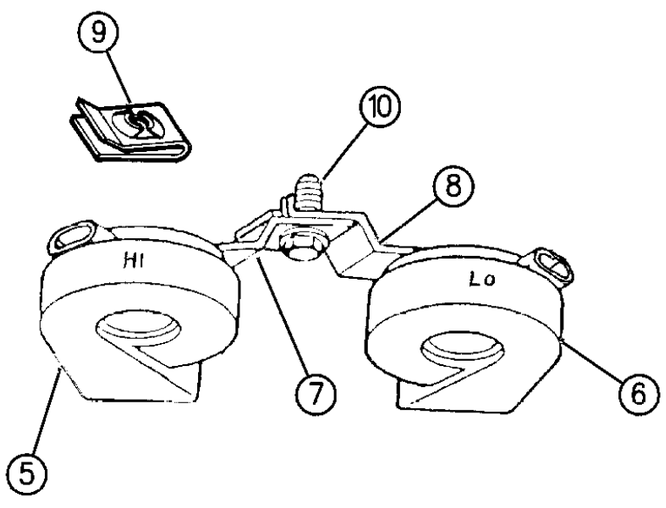

GRAND CHEROKEE

94J08 910A

ITEM	PART NUMBER	QTY	BODY	MODEL	DESCRIPTION
1		1	YJ		HORN, High Note
	5600 8711				1994
	5600 8709				1995
2	0181 063	1	YJ		SCREW
3					HORN
	5600 7239	1	XJX1		USA--CANADA--KDX, Low Note
	5600 7240	1	XJX1		High Note, USA--CANADA--KDX
4	3420 2606	2			SCREW
5	5600 7189	1	ZJ		HORN, High Note
6	5600 7191	1	ZJ		HORN, Low Note
7	5600 7190	1	ZJ		BRACKET, High Note
8	5269 115	1	ZJ		BRACKET, Low Note
9	6101 283	1	ZJ		U-NUT
10		1	ZJ		SCREW, (Not Serv.)(M8X1.25x22.00)

MODEL CODES:

72=2 DR Wagon
74=4 DR Wagon
77=Open Body 93" Whlbase
78=Open Body 103" Whlbase - Export
T=2WD
J,N=4WD
U=4WD (RHD)

BODY STYLES:

YJ=Wrangler (4X4) "S"
Weangler (4X4) SE
Wrangler (4X4) Sahara
Wrangler (4X4) Renegade
XJ=Cherokee SE
Cherokee Sport
Cherokee Country
ZJ=Grand Cherokee SE
Grand Cherokee Laredo
Grand Cherolee Limited
ZG=Grand Cherokee European
Y1=Wrangler
X1=Cherokee
Z1=Grand Cherokee
KDX=Vehicles

AR = Use as Required - = Non Illustrated Part P.A.R. = Paint as Required

BATTERY TRAYS
Figure 8-1005

8-1005

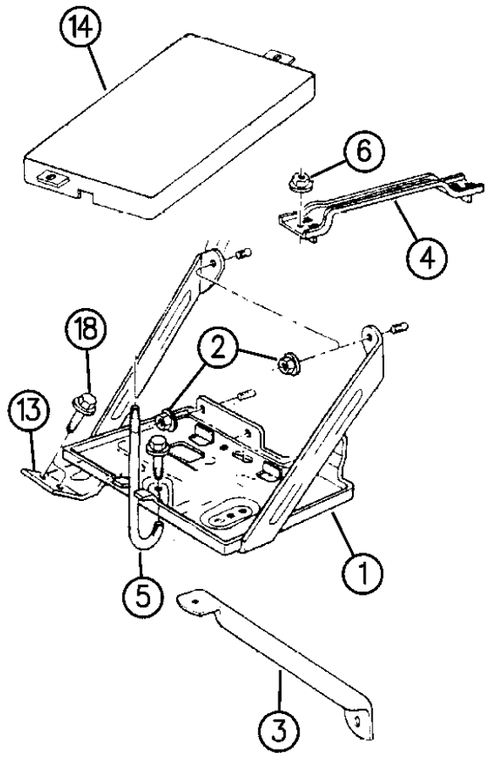

WRANGLER

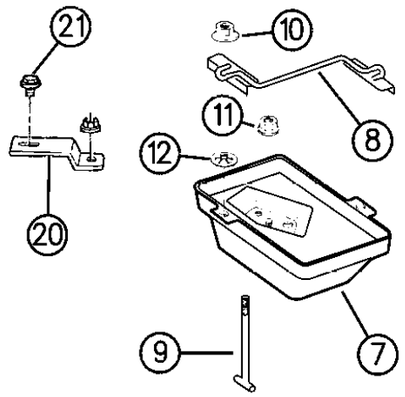

CHEROKEE

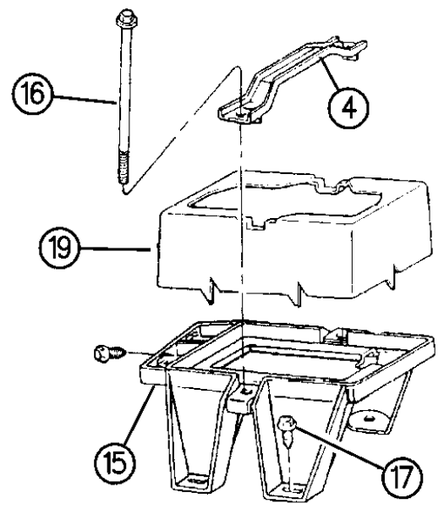

GRAND CHEROKEE

94J08 1005

ITEM	PART NUMBER	QTY	BODY	MODEL	DESCRIPTION
1	5534 5013	1	YJ		TRAY, Battery
	J805 1827	1	Y1		KDX - Egypt
2	J400 6715	5			NUT
3	5502 7338	1	YJ		BRACE
4	5501 4361	1	YJZJZG		BRACKET, Battery
	J805 1829	1	Y1		KDX - Egypt
5	5502 6434	2	YJ		ROD
6	J400 5937	2	YJ		NUT
7		1			TRAY, Battery
	5200 2092				1994
	5523 5294				1995-96
	5501 0770	1	XJ		Diesel Eng., EUROPE
8	5501 0722				BRACKET, Battery
	5501 1012	1	XJ		Diesel Eng., EUROPE
9	5501 4375	2	XJ		ROD, 6-Cyl. Eng.
10	3420 1918	2	XJ		NUT
11		3	XJ		NUT, (Not Serv.)
12		2			NUT, Push (Not Serv.)
13	5534 4770	1			BRACKET, Battery
14	J805 1828	1	Y1		TOP, Battery Box KDX - Egypt
15		1			SUPPORT, Battery Tray
	5525 4551				4.0L & 5.2L Engine
	5525 4749		ZJ		Diesel
	5525 4754		ZG Z1		Diesel (Export)
16	6502 783	2	ZJ,ZG		BOLT, Battery Hold Down
17	6100 556	5	ZJ,ZG		SCREW
18	0180 077	3	YJ		BOLT, (Hex Head 5/16 18x3/4)
19	5602 6843	1	ZJ,ZG		COVER, Battery Thermoguard
20	5534 6107	1	XJ,X1		STRAP, Battery Supt.
21	3420 1809	1			SCREW

MODEL CODES:

72=2 DR Wagon
74=4 DR Wagon
77=Open Body 93" Whlbase
78=Open Body 103" Whlbase - Export
T=2WD
J,N=4WD
U=4WD (RHD)

BODY STYLES:

YJ=Wrangler (4X4) "S"
Weangler (4X4) SE
Wrangler (4X4) Sahara
Wrangler (4X4) Renegade
XJ=Cherokee SE
Cherokee Sport
Cherokee Country
ZJ=Grand Cherokee SE
Grand Cherokee Laredo
Grand Cherolee Limited
ZG=Grand Cherokee European
Y1=Wrangler
X1=Cherokee
Z1=Grand Cherokee
KDX=Vehicles

AR = Use as Required - = Non Illustrated Part P.A.R. = Paint as Required

BATTERY CABLES WRANGLER--CHEROKEE--GRAND CHEROKEE
Figure 8-1010

8-1010A

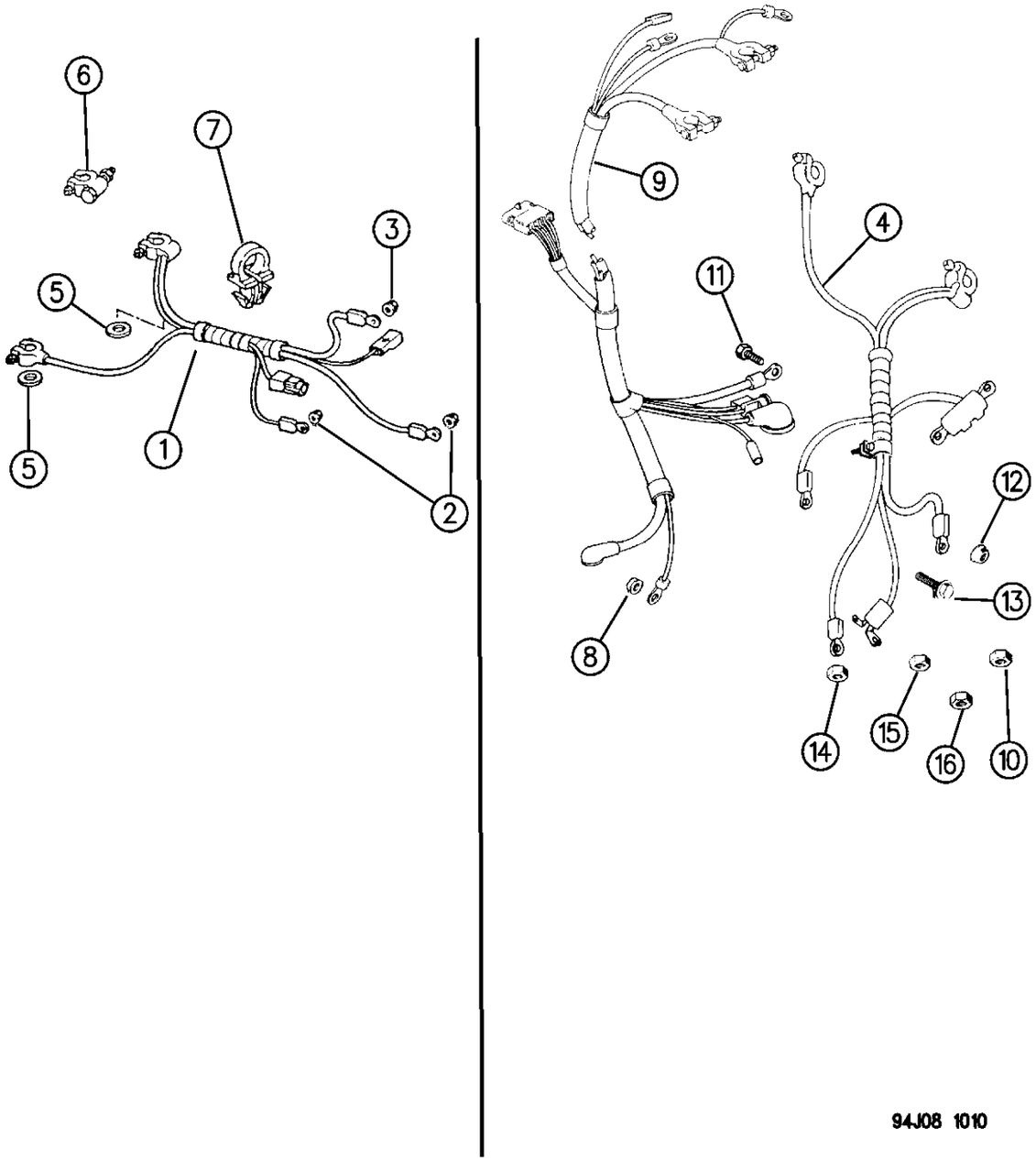

ITEM	PART NUMBER	QTY	BODY	MODEL	DESCRIPTION
1					WIRING, Battery
	5601 8783	1	ZJ		1996 (4.0L) 6 Cylinder
	5601 8784	1	ZJ		1996 (8 Cylinder Engines)
	5604 2726AA	1	ZG		1996 Diesel Engine
		1	XJ		1994 2.5, Auto,Service Engine Wiring Harness 56017872 Pos.& Neg.
		1	XJ		1994 2.5 Man.Service Engine Wiring Harness 56017370 Pos.& Neg.
	5601 9802		XJ		w/430 or 500 Amp. Battery (1995)
	5601 7763		YJ		LHD
2	J400 6715	1			NUT, 4 Cyl. Eng.
	J027 1187	2			6 Cyl. Eng.
3	1150 2729	1			NUT
4		1	ZJ		WIRING, Generator, Battery, Starter
					6-Cyl.
	5601 9512				1994
	5600 8860				1995
	5601 8913	1	ZJ		8-Cyl.
	5601 9548				1994
	5600 8861				1995
5	5227 487	2			WASHER, Terminal Anti-Corrosion
6					TERMINAL, Positive (Serviced w/Item #1)
7	3420 1633	1			CLIP
8	0154 591	1	XJ		NUT
9		1			WIRING, Alternator/Battery
	5603 7031	1	ZG		4 Cylinder 1996 (RHD)
	5601 7778		XJ		6 Cylinder (1994)
	5600 9608		XJ		(1996) ***
	5600 8861		ZJ		8 Cylinder
	5601 8028	1	XJ		Diesel Eng., EUROPE
	5601 7920	1	XJ		CABLE, Positive Battery (1995-96)Export
	5601 8549	1	XJ		CABLE, Negative Battery (1995-96) Export
10	6502 691	2	ZJ		NUT
11	J942 8638	1	XJ,ZJ		BOLT
12	J400 6715	1	ZJ		NUT, w/Washer
13	J400 6887	1	ZJ		BOLT, w/Washer
14	1150 2702	1	ZJ		NUT, Starter
15	6502 691	1	ZJ		NUT, Alternator
16	6502 690	2	ZJ		NUT, Self Lock

MODEL CODES:

72=2 DR Wagon
74=4 DR Wagon
77=Open Body 93" Whlbase
78=Open Body 103" Whlbase - Export
T=2WD
J,N=4WD
U=4WD (RHD)

BODY STYLES:

YJ=Wrangler (4X4) "S"
Weangler (4X4) SE
Wrangler (4X4) Sahara
Wrangler (4X4) Renegade
XJ=Cherokee SE
Cherokee Sport
Cherokee Country
ZJ=Grand Cherokee SE
Grand Cherokee Laredo
Grand Cherolee Limited
ZG=Grand Cherokee European
Y1=Wrangler
X1=Cherokee
Z1=Grand Cherokee
KDX=Vehicles

AR = Use as Required - = Non Illustrated Part P.A.R. = Paint as Required

« RETURN TO GROUP INDEX

LAMPS--FRONT WRANGLER
Figure 8-1105

8-1105

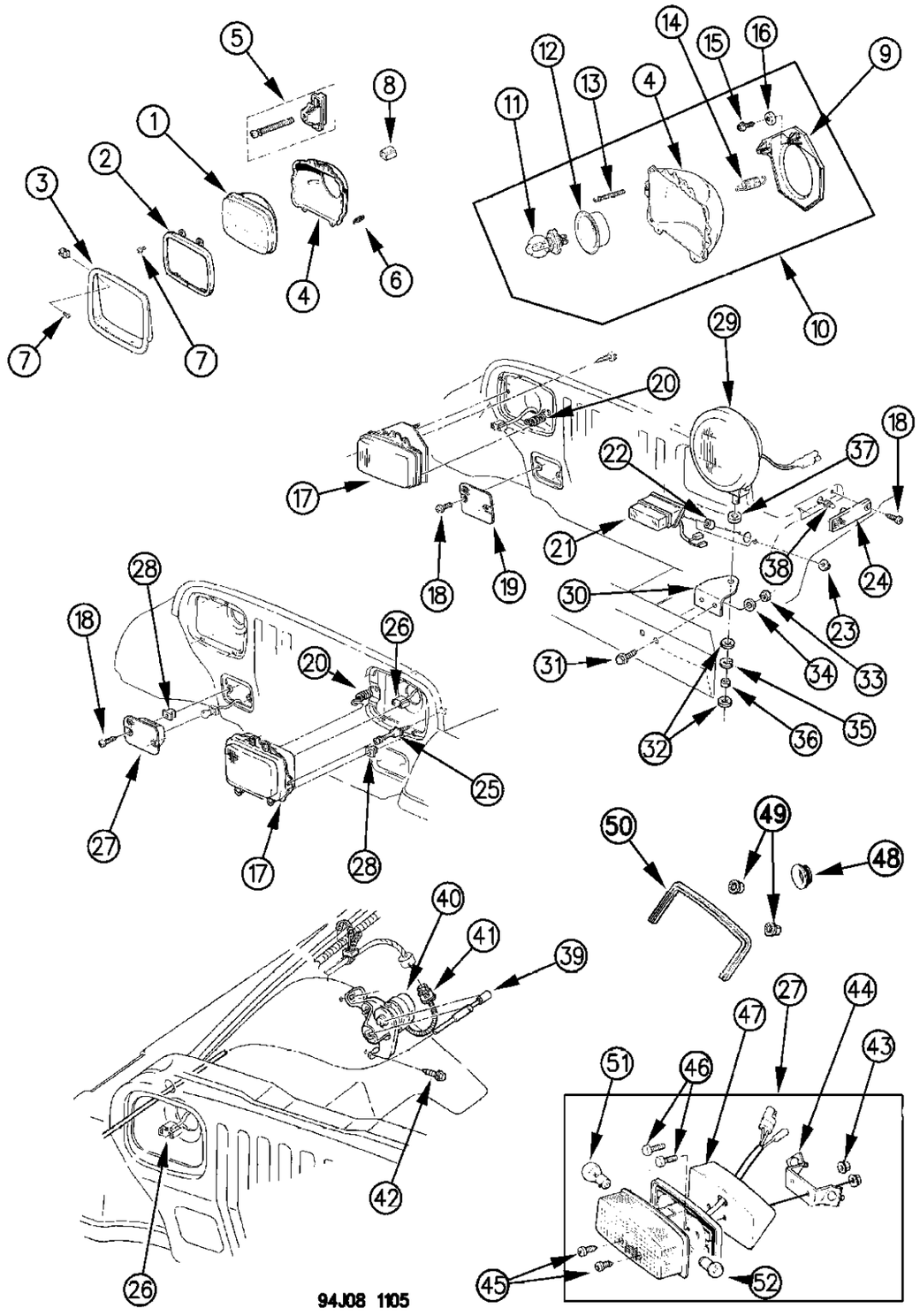

ITEM	PART NUMBER	QTY	BODY	MODEL	DESCRIPTION
1	0153 590	2			BULB, Seal Beam (6054)
2		2			RING, Headlamp
	5600 1260				
	J324 2282				EUROPE
3	5600 3104-5				BEZEL, Headlamp, Chrome
	5600 1908-9	1			(P.A.R.)
	5505 4964-5				Black/Gray
	5600 1396-7				Chrome, EUROPE
4	5600 1278-9	1			SEAT, Headlamp
	5600 3082-3				ECE
	4741 838-9				EUROPE
5	5505 4844	4			SCREW, Headlamp Adjusting
6	3600 2216	2			SPRING
7	3420 1821	8			SCREW
8	J417 9300	2			CONNECTOR, Headlamp
9	5505 4752-3				ADAPTOR, H/Lamp Mtg.
10	5600 3086				HEADLAMP ASSEMBLY, ECE
	4740 514				Clear, (HELLA) EUROPE
11	J324 2537				BULB, Clear
12	J813 3795				BOOT
13	5600 3095				SCREW, Adjusting
14	3600 2216				SPRING
15	3420 2774				SCREW
16	5500 1994				WASHER, Clamp
17	5600 6212-3				HEADLAMP ASSEMBLY, KDX
18	J400 5821	AR			SCREW
19	5600 3098				COVER, Park & Turn Lamp, EUROPE
20	3600 2216				SPRING, H/Lp. Adj., EUROPE
21	5600 3010-1				LAMP, Frt. Directional
-	5505 5014	2			LAMP, Side Repeater, EUROPE
22	J400 6847				BUSHING, Snap, EUROPE
23	J941 6918				NUT, EUROPE
24	5600 1424				LAMP, Front Side Marker
	5600 3100				EUROPE
					NOTE: side marker socket serviced in headlamp to dash harness only ***
25	5505 4844				SCREW
26					HEADLAMP WIRING (See Illustration 8-1305) ***
27	5505 5077				LAMP, Park & Turn Signal
	0154 509				Clear (T3157)
	0154 525				Amber (T3157)
	5600 3010-1				EUROPE ***

MODEL CODES:

72=2 DR Wagon
74=4 DR Wagon
77=Open Body 93" Whlbase
78=Open Body 103" Whlbase - Export
T=2WD
J,N=4WD
U=4WD (RHD)

BODY STYLES:

YJ=Wrangler (4X4) "S"
Weangler (4X4) SE
Wrangler (4X4) Sahara
Wrangler (4X4) Renegade
XJ=Cherokee SE
Cherokee Sport
Cherokee Country
ZJ=Grand Cherokee SE
Grand Cherokee Laredo
Grand Cherolee Limited
ZG=Grand Cherokee European
Y1=Wrangler
X1=Cherokee
Z1=Grand Cherokee
KDX=Vehicles

AR = Use as Required - = Non Illustrated Part P.A.R. = Paint as Required

LAMPS--FRONT WRANGLER
Figure 8-1105

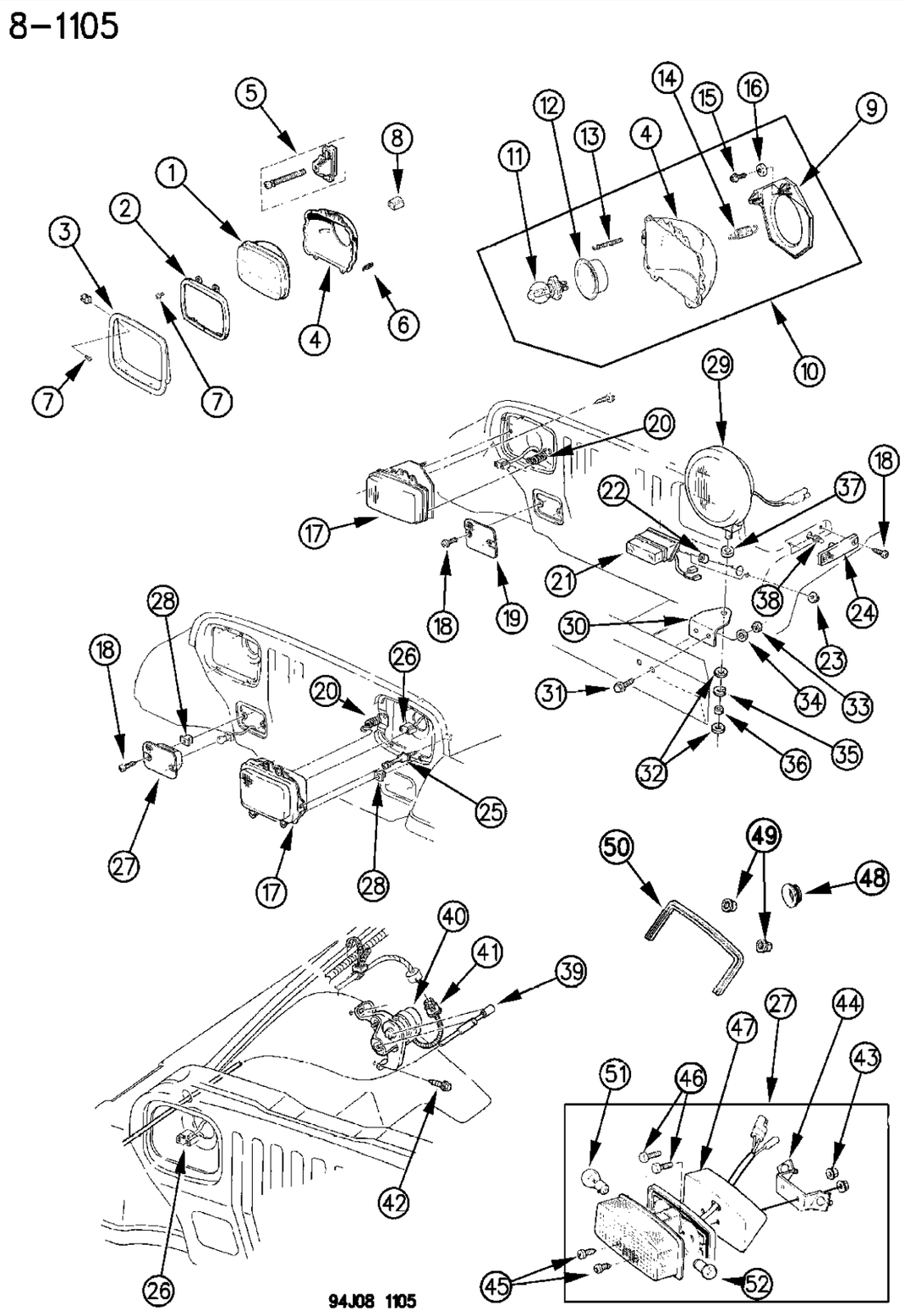

ITEM	PART NUMBER	QTY	BODY	MODEL	DESCRIPTION
	4636 359				SOCKET, Park Turn Signal Lamp
28	J400 0141				NUT
29	5505 4725				LAMP, Fog
	J576 4754				Fog Lamp, Red
-	4728 646				BULB, Fog Lamp
-	4638 839				GRILLE, Fog Lamp (Sahara Pkg.)
	4638 857				(Renegade Pkg.)
	J545 4903				CLIP, Fog Lamp Jumper Harness to Bumper
30	5600 2290				BRACKET, Fog Lamp
31	J400 6986				SCREW
32					BOLT, Not Serv.
33	J400 6080				NUT
34	J013 8485				WASHER
35					WASHER, Serv. #29
36					NUT, Serv. w/#29
37					SPACER, Serv. w/#29
38	9421 330				BULB, #194
39	4741 840-1				CABLE, Headlamp, EUROPE
40	5600 6204				ACTUATOR, Headlamp, Rt.
	5505 4625				Lt.
	4741 989				EUROPE
-	4741 846-7				ADAPTER, Headlamp Mounting Plate
-	4741 985				BRACKET, Actuator, Lt., EUROPE
-	4741 986				BRACKET, Actuator, Rt., EUROPE
41					WIRING, Pigtail (Serv. w/#41)
42	1150 0101				SCREW
43	J027 1163				NUT, Hex
44	5502 1203				BRACKET, Turn Sig. Lamp
45	J400 5806				SCREW
46	J400 3924				SCREW
47	5502 1205				BASE
48	J400 6847				BUSHING
49	J941 6918				NUT, Hex
50	5600 3720				SEAL
51	J575 7455				BULB, (P25-1)
52	J813 3773				BULB, (R19-10)

MODEL CODES:

72=2 DR Wagon
74=4 DR Wagon
77=Open Body 93" Whlbase
78=Open Body 103" Whlbase - Export
T=2WD
J,N=4WD
U=4WD (RHD)

BODY STYLES:

YJ=Wrangler (4X4) "S"
Weangler (4X4) SE
Wrangler (4X4) Sahara
Wrangler (4X4) Renegade
XJ=Cherokee SE
Cherokee Sport
Cherokee Country
ZJ=Grand Cherokee SE
Grand Cherokee Laredo
Grand Cherolee Limited
ZG=Grand Cherokee European
Y1=Wrangler
X1=Cherokee
Z1=Grand Cherokee
KDX=Vehicles

AR = Use as Required - = Non Illustrated Part P.A.R. = Paint as Required

LAMPS--REAR WRANGLER
Figure 8-1120

8-1120B

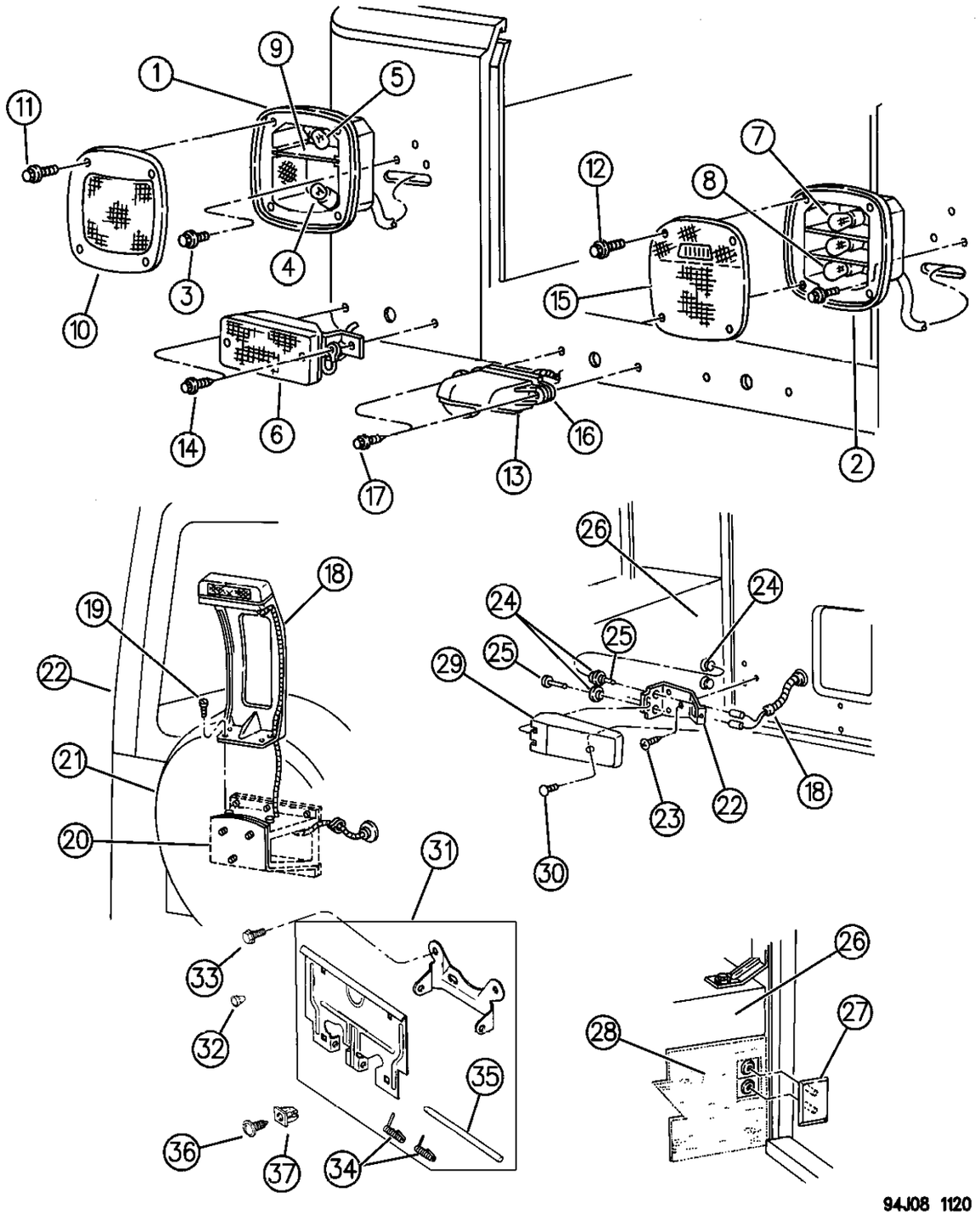

ITEM	PART NUMBER	QTY	BODY	MODEL	DESCRIPTION
1	5601 6720-1				TAILLAMP ***
2	J576 4204	2			EUROPE
-	8350 1003	2			LENS, Taillamp, EUROPE
-	5600 6513				GASKET, Taillamp
3	J400 0318	6			SCREW
4	9438 848				BULB, #2057
5	9417 866				BULB, #1156
6	5600 4484				FOG LAMP, Rear,(INCLUDES: Brkt. 55021488--Jumper Ground Wire 56003549--Wire Jumper 56004483) EUROPE ***
-	J813 4339				LENS, Fog Lamp Rear, EUROPE
7					BULB, Taillamp (Not Required)
8					BULB, Taillamp (Not Required)
9					BAFFLE, Lamp ***
10	5600 6514				LENS
11					SCREW, Lamp Mtg. (Serv. Assy.)
12					SCREW, Lamp Mtg. (Not Serv.)
13	5600 3898				LAMP, License
	5505 4786				EUROPE
14	9421 073				SCREW, Fog Lamp
15					LENS, (Serv. Assy.)
16	5505 4826				SPACER, License Lamp
17					SCREW, (Not Serv.)
18	5505 4973				LAMP, Hi-Mtd. Stop, w/o Bracket
	5505 4974				BRACKET, Hi-Mtd. Stop Lamp
	5601 8091				WIRING, Hi-Mtd. Stop Lamp
-		AR			BULB, Hi-Mtd. Stop Lamp
	0153 988				(No. 922)
	9437 173				(No. 912)
19	6034 907				SCREW
20					BRACKET, Spare Tire Mtg.
21					SPARE TIRE ***
22	5601 8459				CLAMP, Contact Button
23					SCREW, (Not Serv.)
24	6031 562				GROMMET, Contact Body
25	4362 012				TERMINAL, Contact Button
26					BODY
27					COVER, Wheelhouse Carpet (Serv. Assy.)
28					CARPET
29	5521 5665				COVER, Contact Button Brkt.
30					SCREW, (Serv. Assy.)
31		1			BRACKET ASSEMBLY, License Plate
	5500 7403				U.S.A.

MODEL CODES:

72=2 DR Wagon
74=4 DR Wagon
77=Open Body 93" Whlbase
78=Open Body 103" Whlbase - Export
T=2WD
J,N=4WD
U=4WD (RHD)

BODY STYLES:

YJ=Wrangler (4X4) "S"
Weangler (4X4) SE
Wrangler (4X4) Sahara
Wrangler (4X4) Renegade
XJ=Cherokee SE
Cherokee Sport
Cherokee Country
ZJ=Grand Cherokee SE
Grand Cherokee Laredo
Grand Cherolee Limited
ZG=Grand Cherokee European
Y1=Wrangler
X1=Cherokee
Z1=Grand Cherokee
KDX=Vehicles

AR = Use as Required - = Non Illustrated Part P.A.R. = Paint as Required

LAMPS--REAR WRANGLER
Figure 8-1120

8-1120B

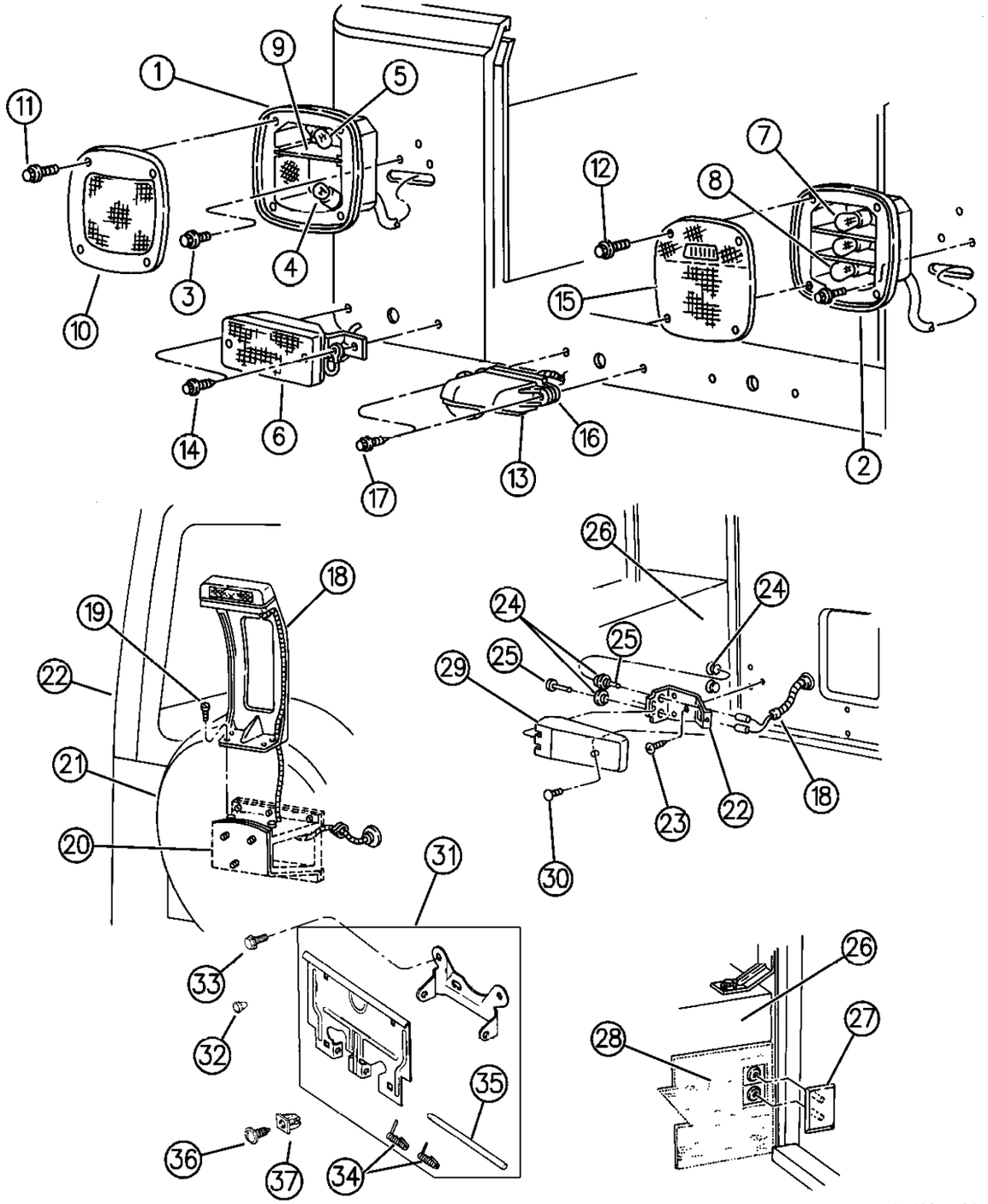

ITEM	PART NUMBER	QTY	BODY	MODEL	DESCRIPTION
	J576 4216				EUROPE
32	J400 6673	2			BUMPER
33	J400 5817	2			SCREW
34	J324 0412-3	1			SPRING
35	J319 0716	1			PIN
36	J400 0272	2			SCREW
37	J400 0141	2			NUT

MODEL CODES:

72=2 DR Wagon
74=4 DR Wagon
77=Open Body 93" Whlbase
78=Open Body 103" Whlbase - Export
T=2WD
J,N=4WD
U=4WD (RHD)

BODY STYLES:

YJ=Wrangler (4X4) "S"
Weangler (4X4) SE
Wrangler (4X4) Sahara
Wrangler (4X4) Renegade
XJ=Cherokee SE
Cherokee Sport
Cherokee Country
ZJ=Grand Cherokee SE
Grand Cherokee Laredo
Grand Cherolee Limited
ZG=Grand Cherokee European
Y1=Wrangler
X1=Cherokee
Z1=Grand Cherokee
KDX=Vehicles

AR = Use as Required - = Non Illustrated Part P.A.R. = Paint as Required

LAMPS--FRONT LEVELING WRANGLER--CHEROKEE EXPORT
Figure 8-1130

8-1130A

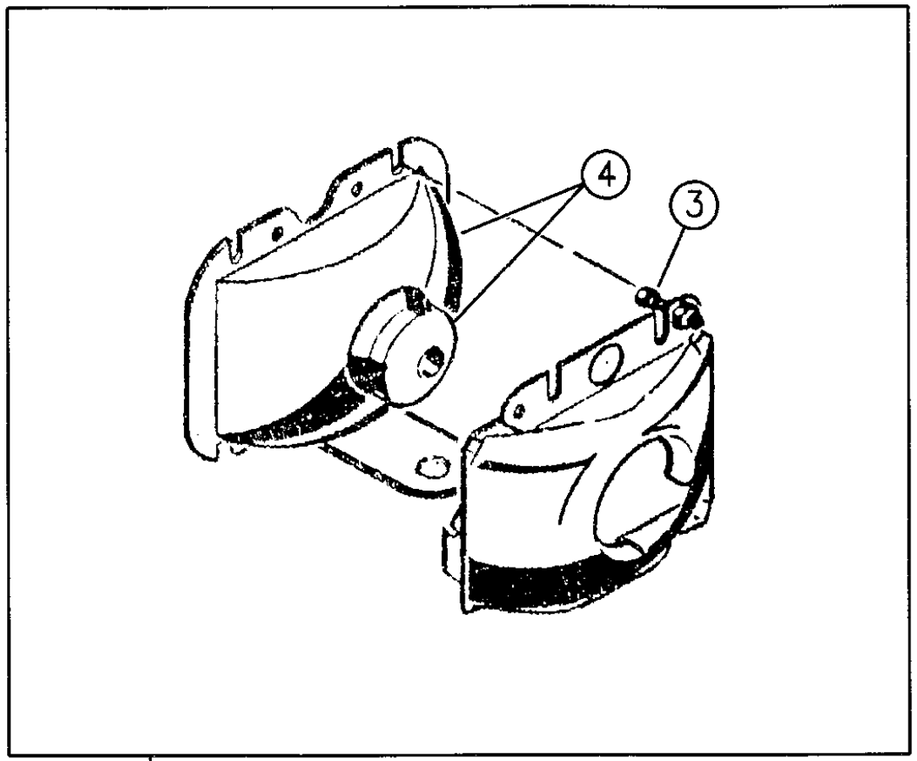

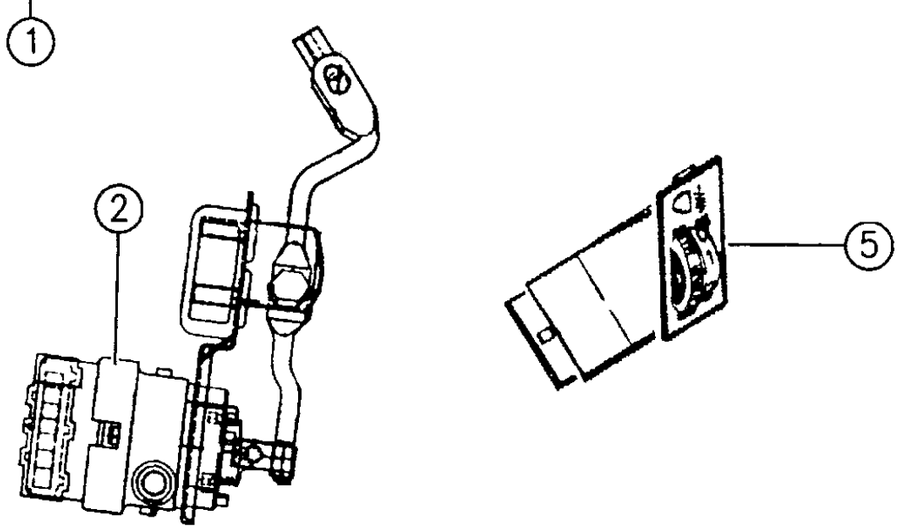

94J08 1130

ITEM	PART NUMBER	QTY	BODY	MODEL	DESCRIPTION
1	5600 6212-3	1	YJ		HEADLAMP ASSEMBLY
	5505 4982-3	1	XJ-X1		EUROPE w/Headlamp Leveling Device
	5515 5274				Rt., RHD
	5505 4829				Lt., RHD
	5505 4827		XJYJ		Halogen, EXPORT
	4882 262		YJ		Right (JAPAN)
	4882 263		YJ		Left (JAPAN)
2	5600 6204	1	YJ		ACTUATOR, Rt.
	5505 4625	1	YJ		Left
	5505 4970-1	1	XJ		
3	3420 1821	4			SCREW
4					HEADLAMP
	4740 514	2	YJ		Clear Bulb E-1 (ALLIED TECH)
	4740 518	2	YJ		Clear Bulb E-2 (WAGNER)
	J813 3772	1	YJ XJ		Bulb, H-4
	J324 2539	2	XJ		BULB, T 8/4
5	5600 6721	1			SWITCH, Headlamp Leveling

MODEL CODES:

72=2 DR Wagon
74=4 DR Wagon
77=Open Body 93" Whlbase
78=Open Body 103" Whlbase - Export
T=2WD
J,N=4WD
U=4WD (RHD)

BODY STYLES:

YJ=Wrangler (4X4) "S"
Weangler (4X4) SE
Wrangler (4X4) Sahara
Wrangler (4X4) Renegade

XJ=Cherokee SE
Cherokee Sport
Cherokee Country

ZJ=Grand Cherokee SE
Grand Cherokee Laredo
Grand Cherolee Limited
ZG=Grand Cherokee European

Y1=Wrangler
X1=Cherokee
Z1=Grand Cherokee
KDX=Vehicles

AR = Use as Required - = Non Illustrated Part P.A.R. = Paint as Required

LAMPS--FOG CHEROKEE--GRAND CHEROKEE
Figure 8-1135

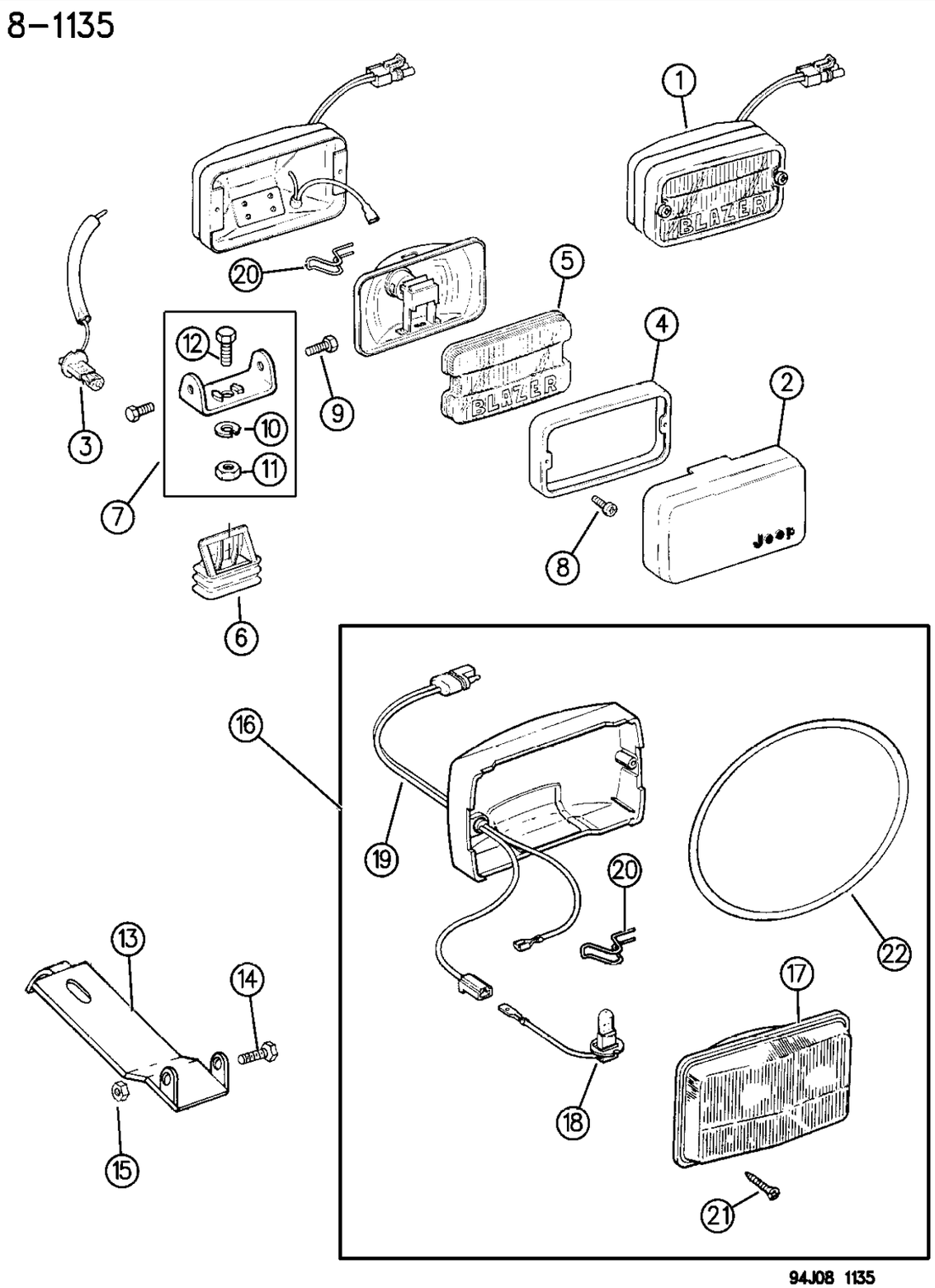

ITEM	PART NUMBER	QTY	BODY	MODEL	DESCRIPTION
1	5505 4739	2	XJ		LAMP ASSEMBLY, Fog (Black) 1994-96
-	4728 646				BULB, Fog Lamp, H-3 50-Watt
2	5505 4742	2	XJ		COVER, Fog Lamp
3	8350 3692	2	XJ		ELEMENT, Quartz Halogen ***
4	8350 3699	2	XJ		BEZEL
5	4638 841	2	XJ		LENS, Fog Lamp
6	4638 842	2	XJ		BOOT
7	4638 843	2	XJ		BRACKET, Fog Lamp
8	3420 1781	4	XJ		SCREW
9	J806 0007	4	XJ		SCREW
10	1150 0207	2	XJ		WASHER, Lock
11	J420 0405	2	XJ		NUT
12	S150 2788	2	XJ		BOLT
13		AR	ZJ		BRACKET, Mounting
	4713 578	2			1994-95
	4856 394-5	1			1996
-	4856 396	AR	ZJ		PLATE, Fog Lamp Bracket
14		2	ZJ		BOLT, Bracket Mounting
	4713 579				1994-95
	4856 397				1996
15	4713 580	2	ZJ		NUT, Bracket Mounting
16			ZJ		LAMP ASSEMBLY, (Includes #17,18,19,20,21,22)
	4713 582	2			1994-95 (Sealed Unit 1994-95 Only)
	5505 5128-9	1			1996
-	4676 351	AR	ZJ		VENT, Aero H/Lamp 1996 (Included in Lamp Assembly)
17		2	ZJ		LENS
	4713 584				1994-95
					1996 (Serviced in Assembly)
18		2	ZJ		BULB
	4713 586				1994-95
	4728 646				1996
19		2	ZJ		WIRING
	4713 588				1994-95
	4856 399				1996
20	4713 709	2	ZJ		RETAINER, Bulb
21	4713 713	4	ZJ		SCREW, Lens
22		2	ZJ		O-RING, Lens Mounting
	4713 741				1994-95
	4856 398				1996 (Cover w/Seal)

MODEL CODES:

72=2 DR Wagon
74=4 DR Wagon
77=Open Body 93" Whlbase
78=Open Body 103" Whlbase - Export
T=2WD
J,N=4WD
U=4WD (RHD)

BODY STYLES:

YJ=Wrangler (4X4) "S"
Weangler (4X4) SE
Wrangler (4X4) Sahara
Wrangler (4X4) Renegade
XJ=Cherokee SE
Cherokee Sport
Cherokee Country
ZJ=Grand Cherokee SE
Grand Cherokee Laredo
Grand Cherolee Limited
ZG=Grand Cherokee European
Y1=Wrangler
X1=Cherokee
Z1=Grand Cherokee
KDX=Vehicles

AR = Use as Required - = Non Illustrated Part P.A.R. = Paint as Required

« RETURN TO GROUP INDEX

LAMPS--FRONT CHEROKEE
Figure 8-1140

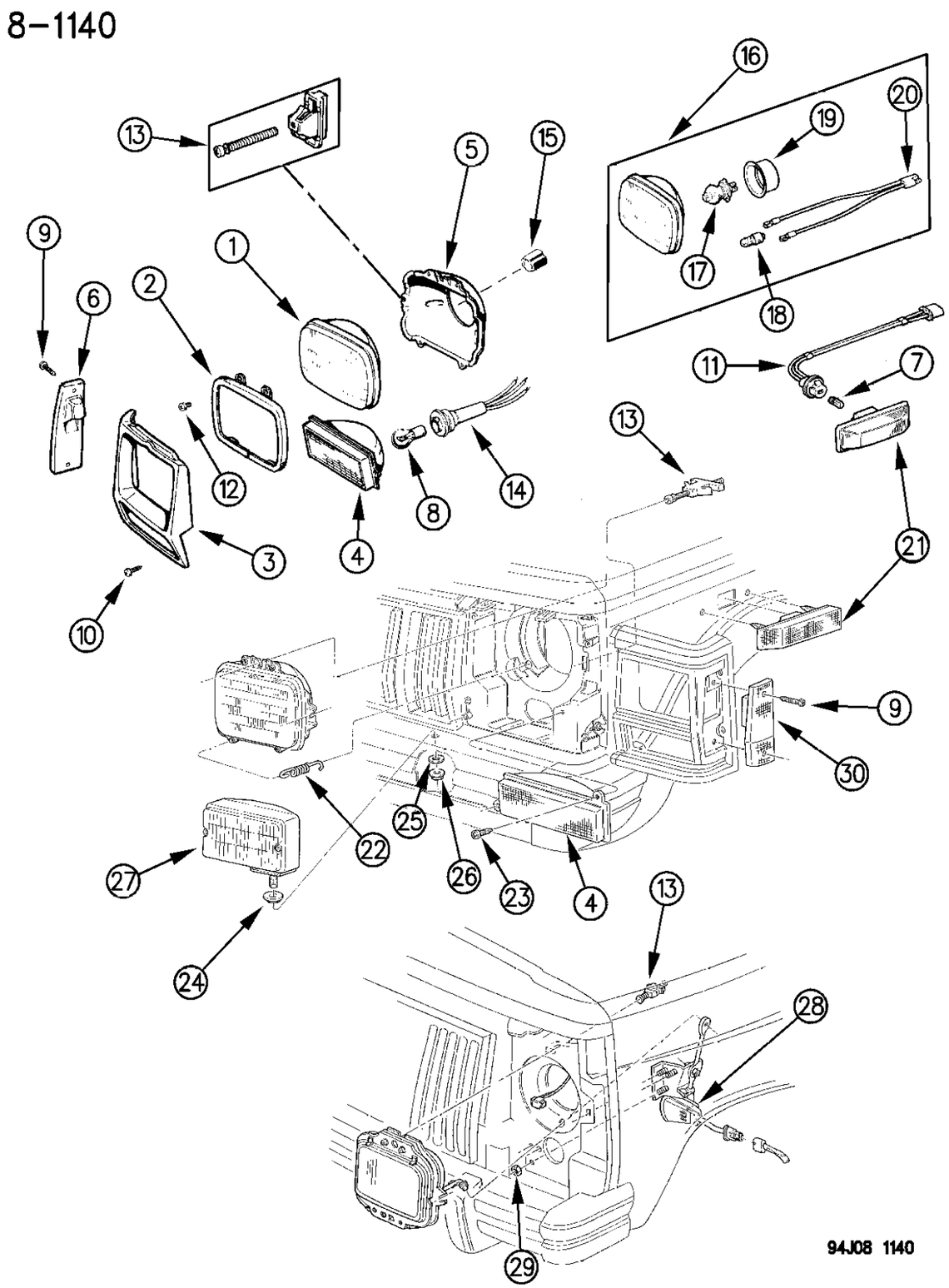

ITEM	PART NUMBER	QTY	BODY	MODEL	DESCRIPTION
1	0153 590	2			BULB, Seal Beam (6054)
2	5600 1260	2			RING, Headlamp
3					BEZEL, Headlamp
	5503 4078-9	1			Black/Chrome
	5505 4930-1				Black/Black (Flat Black)
	5DV5 4RV1				Rt., Light Pearstone (1996)
	5DV5 1RV1				Lt. (1996)
	5DV5 4PCJ				Rt., Montego Blue
	5DV5 1PCJ				Lt.
	5DV5 4PG5				Rt., Green
	5DV5 1PG5				Lt.
	5DV5 4PGF				Rt., Emerald Green
	5DV5 1PGF				Lt.
	5DV5 4RJN				Rt., Moss Green (1996)
	5DV5 1RJN				Lt. (1996)
	5DV5 4PQ2				Rt., Turquoise
	5DV5 1PQ2				Lt.
	5DV5 4PS7				Rt., Charcoal
	5DV5 1PS7				Lt.
	5DV5 4PV4				Rt., Champagne
	5DV5 1PV4				Lt.
	5DV5 4PR4				Rt., Red
	5DV5 1PR4				Lt.
	5DV5 4PW7				Rt., White
	5DV5 1PW7				Lt.
	5DV5 4SW1				Rt., White(1996)
	5DV5 1SW1				Lt.(1996)
	5DV5 4SQP				Rt., Bright Jade (1996)
	5DV5 1SQP				Lt. (1996)
	5DV5 4PX8				Rt., Black (Gloss Black)
	5DV5 1PX8				Lt.
4	5600 0098-9	1			LAMP, Parking
	5600 0852-3	1			EUROPE
5	5600 1278-9	1			SEAT, Headlamp
	J373 7570-1	1			RHD
6	5600 0110-1	1			LAMP, Marker
	5600 0638-9	1			EUROPE
7	9421 330	2			BULB
8	L020 57NA	2			BULB
9	3420 1406	4			SCREW
10	3420 1721	8			SCREW
11	5600 1433	2			SOCKET, EUROPE

MODEL CODES:

72=2 DR Wagon
74=4 DR Wagon
77=Open Body 93" Whlbase
78=Open Body 103" Whlbase - Export
T=2WD
J,N=4WD
U=4WD (RHD)

BODY STYLES:

YJ=Wrangler (4X4) "S"
Weangler (4X4) SE
Wrangler (4X4) Sahara
Wrangler (4X4) Renegade
XJ=Cherokee SE
Cherokee Sport
Cherokee Country
ZJ=Grand Cherokee SE
Grand Cherokee Laredo
Grand Cherolee Limited
ZG=Grand Cherokee European
Y1=Wrangler
X1=Cherokee
Z1=Grand Cherokee
KDX=Vehicles

AR = Use as Required - = Non Illustrated Part P.A.R. = Paint as Required

LAMPS--FRONT CHEROKEE
Figure 8-1140

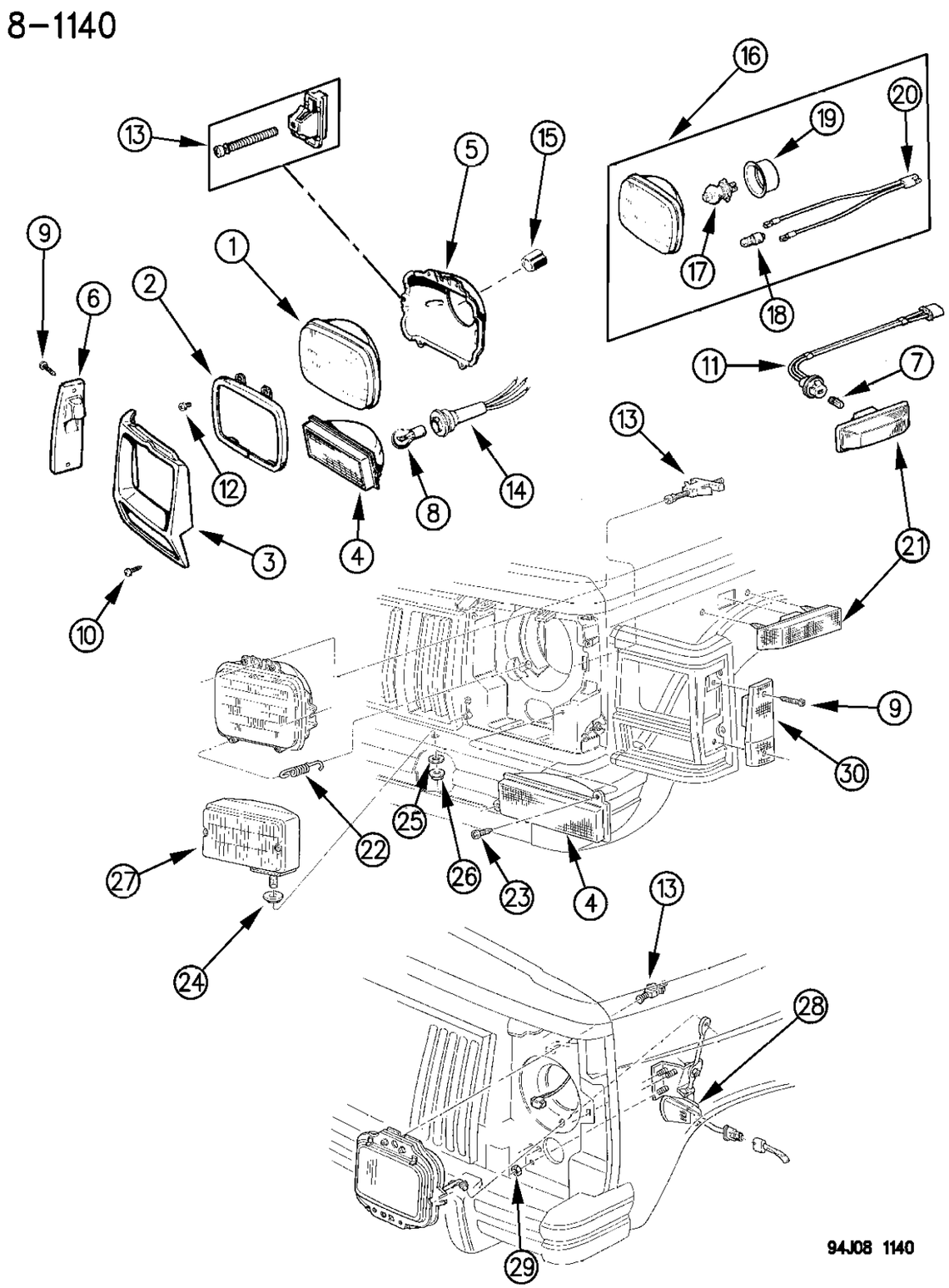

ITEM	PART NUMBER	QTY	BODY	MODEL	DESCRIPTION
12	3420 1821	4			SCREW
13	5505 4621	4			SCREW, Headlamp Adjust, w/Nut
14		2			SOCKET, Parking Lamp (Serv. In Front End Wire 56018425 w/o Fog Lamps)
					(56018638 w/Fog Lamps)
15		2			SOCKET, Headlamp (Serv. In Front End Wiring Illus. 1510A)
16		AR			HEADLAMP ASSEMBLY, EXPORT
	5505 4982-3				1994-96 w/H/Lamp Leveling Device
	5505 4828-9				1994-96 w/o H/Lamp Leveling Device
	5600 0887	1			1994-1996 Halogen Clear w/o H/Lamp Leveling
17					BULB
	J324 2784				AMBER--H-4
	J324 2539				CLEAR-T8-4
	J324 2537				CLEAR-H-4
18	J324 2539	2			BULB, EXPORT (T8-4)
19	J813 3795	2			BOOT, EXPORT
20	J324 2536	2			WIRING, Lamp, EXPORT
21	5505 5014	2			LAMP, Side Repeater, EXPORT
22	3600 0885				SPRING, H/Lp. Adjusting
23	3420 1372				SCREW, Park/Turn Lamp
24	3420 2321				PLUG, Fog Lamp Hole
25					WASHER, (Serv. Assy.)
26					NUT, (Serv. Assy.)
27	5505 4739				LAMP, Fog
28	5505 4970-1				ACTUATOR, H/Lamp
29	6033 560				NUT, w/Washer
30	5600 0110-1				LAMP, Side Marker
-					COVER, Front Side Marker Opening
	5600 0638-9				1994
	5505 5282-3				1995 (Up to 8/05/94)
	5515 5072-3				1995 (After 8/05/94)
-	5505 5014				LAMP, Side Turn Signal Front

MODEL CODES:

72=2 DR Wagon
74=4 DR Wagon
77=Open Body 93" Whlbase
78=Open Body 103" Whlbase - Export
T=2WD
J,N=4WD
U=4WD (RHD)

BODY STYLES:

YJ=Wrangler (4X4) "S"
Weangler (4X4) SE
Wrangler (4X4) Sahara
Wrangler (4X4) Renegade
XJ=Cherokee SE
Cherokee Sport
Cherokee Country
ZJ=Grand Cherokee SE
Grand Cherokee Laredo
Grand Cherolee Limited
ZG=Grand Cherokee European
Y1=Wrangler
X1=Cherokee
Z1=Grand Cherokee
KDX=Vehicles

AR = Use as Required - = Non Illustrated Part P.A.R. = Paint as Required

LAMPS--FRONT GRAND CHEROKEE
Figure 8-1145

8-1145

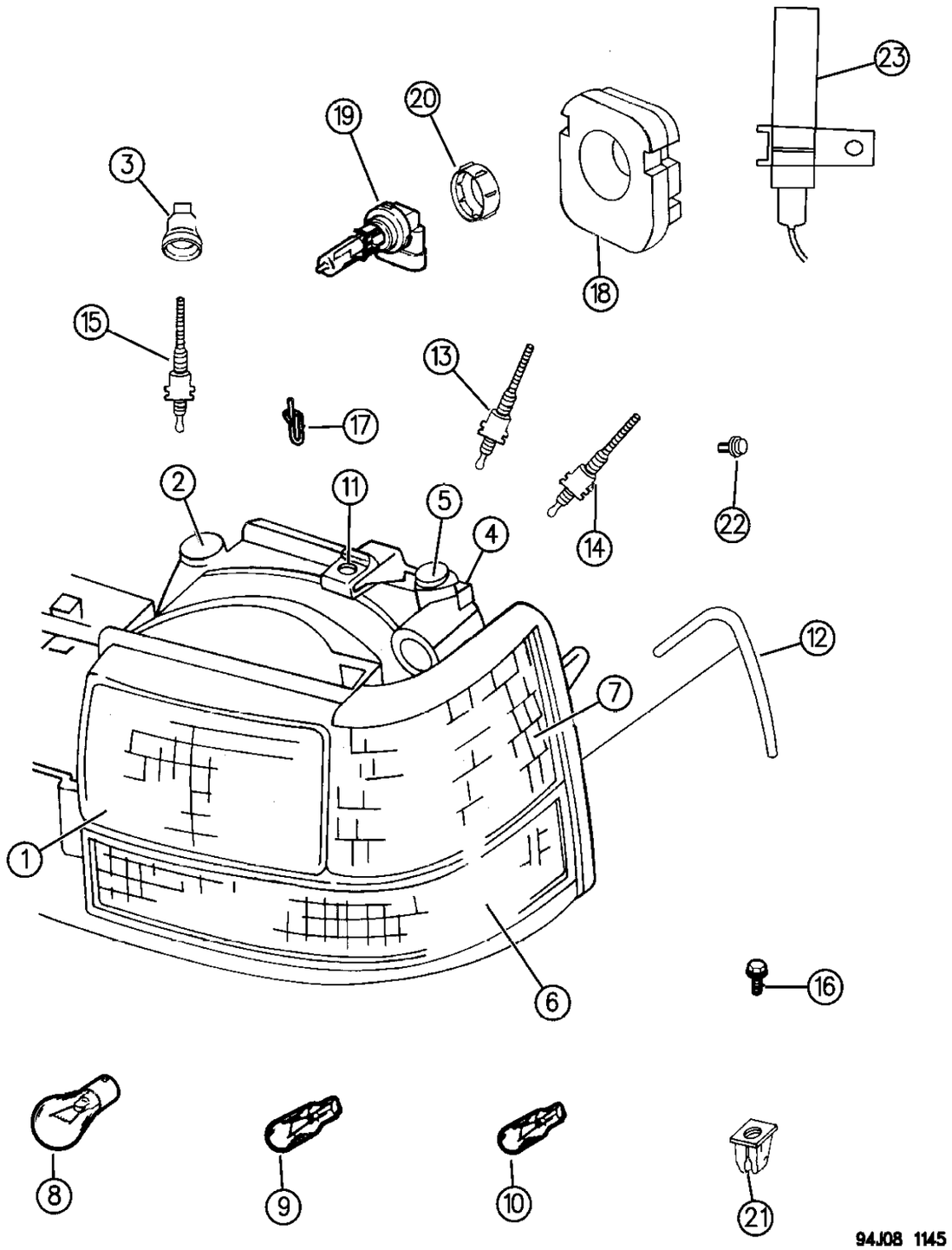

ITEM	PART NUMBER	QTY	BODY	MODEL	DESCRIPTION
1					HEADLAMP ASSEMBLY (w/o H/Lamp Leveling Device) ***
	5600 5092-3	1			1994-95
	5505 5118-9	1			1996
	5505 4576-7	1			ECE
		1			Japan
	5505 4968				Right (1994-95)
	5505 5126				Right (1996)
	5505 4969				Left (1994-95)
	5505 5127				Left (1996)
					HEADLAMP ASSEMBLY (w/H/Lamp Leveling Device) ***
	5505 5176-7	1			England
	5505 4832-3	1			Germany
-	J324 2537	AR			BULB, H/Lamp (ECE)
-	4762 491	AR			CLIP, Hinged Capsule Retaining, JAPAN, EUROPE
-	5505 5312	2			FASTENER, Pivot
-	4741 924	AR			CAPSULE, Hinged Connector, Leveling Headlamp To Actuator, JAPAN, EUROPE ***
-	4762 489	2			CAPSULE, Reflector to Horizontal Adjuster (Round) Lower ***
-	4762 490	1			CAPSULE, Reflector to Verticle Adjuster (Rectangular) Top ***
-	5601 7266	2			WIRING, Headlamp Module, EUROPE
2		2			GEAR, Adjusting-Verticle
	5600 5431				1994-95
	5505 5121				1996
	5515 5458				1996 (EUROPE)
3	5505 4565	2			GEAR, Driven Verticle
4	5600 4553	2			GEAR, Adjusting Pinion
5		2			GEAR, Adjusting Horizontal
	5600 4559				1994-95
	5505 5122				1996
6	5600 5098-9	1			LAMP, Turn
	5505 4580-1				EUROPE
7	5600 5104-5	1			LAMP, Park
	5505 4586-7				EUROPE
8	3600 3101	2			BULB, (1295NA)
9	9421 330	2			BULB, (194)
10	9438 068	2			BULB, (194NA)
11	6101 442	6			U-NUT, (M6x1)
-	4400 588	AR			Socket, Side Lamp ***
12	5502 9634-5	1			WELT
13		2			SCREW, w/Nut, Pivot
	5505 5312				
14	5600 6404	2			SCREW, w/Nut, Horizontal

MODEL CODES:

72=2 DR Wagon
74=4 DR Wagon
77=Open Body 93" Whlbase
78=Open Body 103" Whlbase - Export
T=2WD
J,N=4WD
U=4WD (RHD)

BODY STYLES:

YJ=Wrangler (4X4) "S"
Weangler (4X4) SE
Wrangler (4X4) Sahara
Wrangler (4X4) Renegade
XJ=Cherokee SE
Cherokee Sport
Cherokee Country
ZJ=Grand Cherokee SE
Grand Cherokee Laredo
Grand Cherolee Limited
ZG=Grand Cherokee European
Y1=Wrangler
X1=Cherokee
Z1=Grand Cherokee
KDX=Vehicles

AR = Use as Required - = Non Illustrated Part P.A.R. = Paint as Required

LAMPS--FRONT GRAND CHEROKEE
Figure 8-1145

8-1145

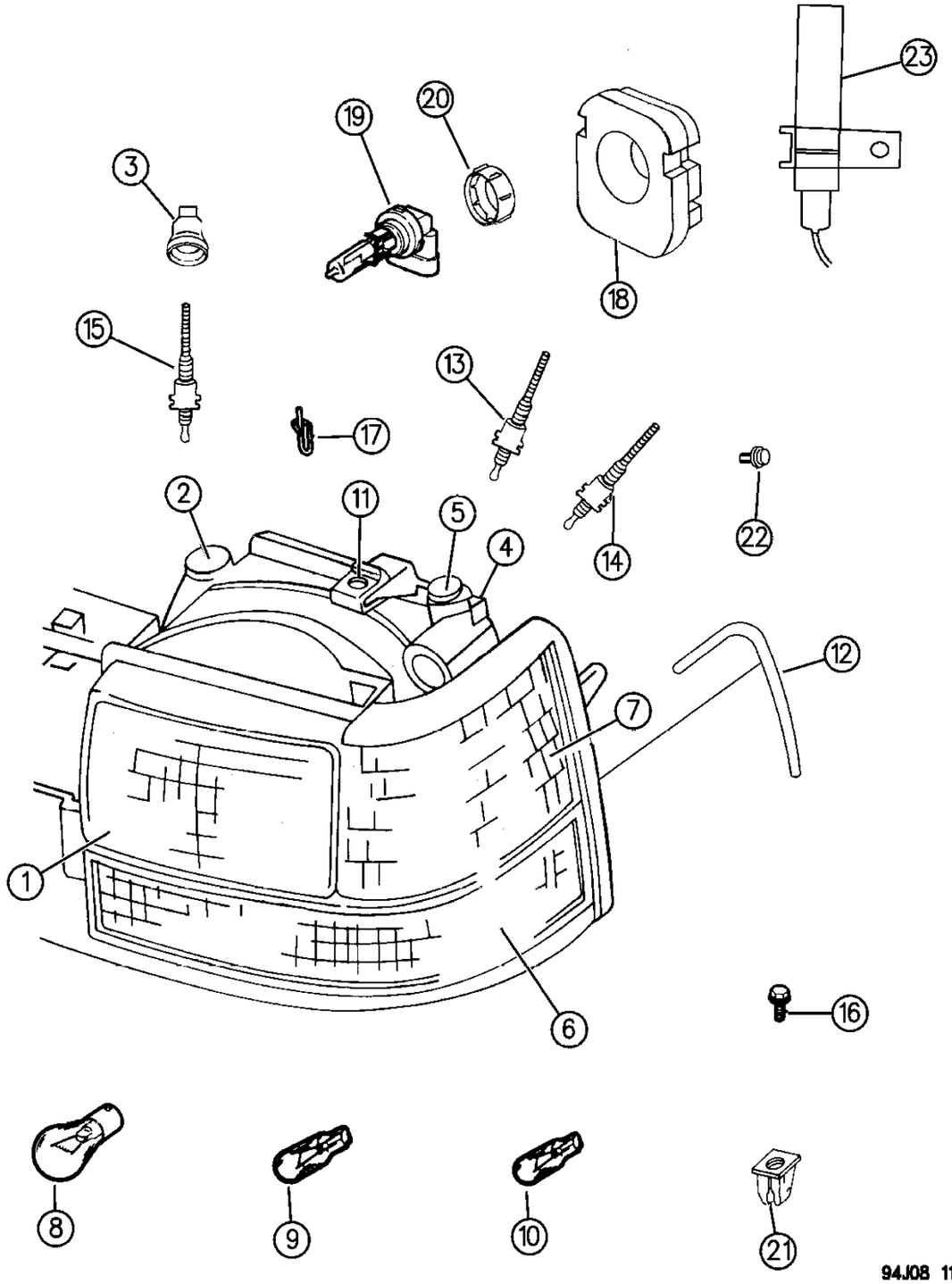

ITEM	PART NUMBER	QTY	BODY	MODEL	DESCRIPTION
15		2			SCREW, w/Nut, Verticle
	5600 6405				U.S.A.
	5505 4940				EXPORT
16		2			SCREW, Park Lamp Mounting
	6034 300				(1.90-16x1.75)
		2			(1.90-16x.625) Not Serviced
17	5505 4771	2			RETAINER, Drive Gear
18		2			SEAL, Closure Panel
	5503 5880				1994
	5503 6798				1995-96
19	4388 238	2			BULB, Aero Headlamp (# 9004)
20		1			LOCK RING, Headlamp Bulb ***
	4713 589				1994
	4388 589				1995-96
21	J400 0141	2			NUT, Nylon Park Lamp Att.
22		2			LAMP, Side Repeater, (ECE)
	4576 158				Round Shaped
	4676 565				Oval Shaped
-	0153 620				BULB, Side Repeater, EUROPE
23	5505 4622-3	1			ACTUATOR, EUROPE
-	5505 5121	AR			Gear, H/Lamp Adjustment (Verticle) ***
	5505 5122	AR			GEAR, H/Lamp Ajustment (Horizontal)

MODEL CODES:

72=2 DR Wagon
74=4 DR Wagon
77=Open Body 93" Whlbase
78=Open Body 103" Whlbase - Export
T=2WD
J,N=4WD
U=4WD (RHD)

BODY STYLES:

YJ=Wrangler (4X4) "S"
Weangler (4X4) SE
Wrangler (4X4) Sahara
Wrangler (4X4) Renegade
XJ=Cherokee SE
Cherokee Sport
Cherokee Country
ZJ=Grand Cherokee SE
Grand Cherokee Laredo
Grand Cherolee Limited
ZG=Grand Cherokee European
Y1=Wrangler
X1=Cherokee
Z1=Grand Cherokee
KDX=Vehicles

AR = Use as Required - = Non Illustrated Part P.A.R. = Paint as Required

LAMPS--REAR GRAND CHEROKEE
Figure 8-1150

8-1150

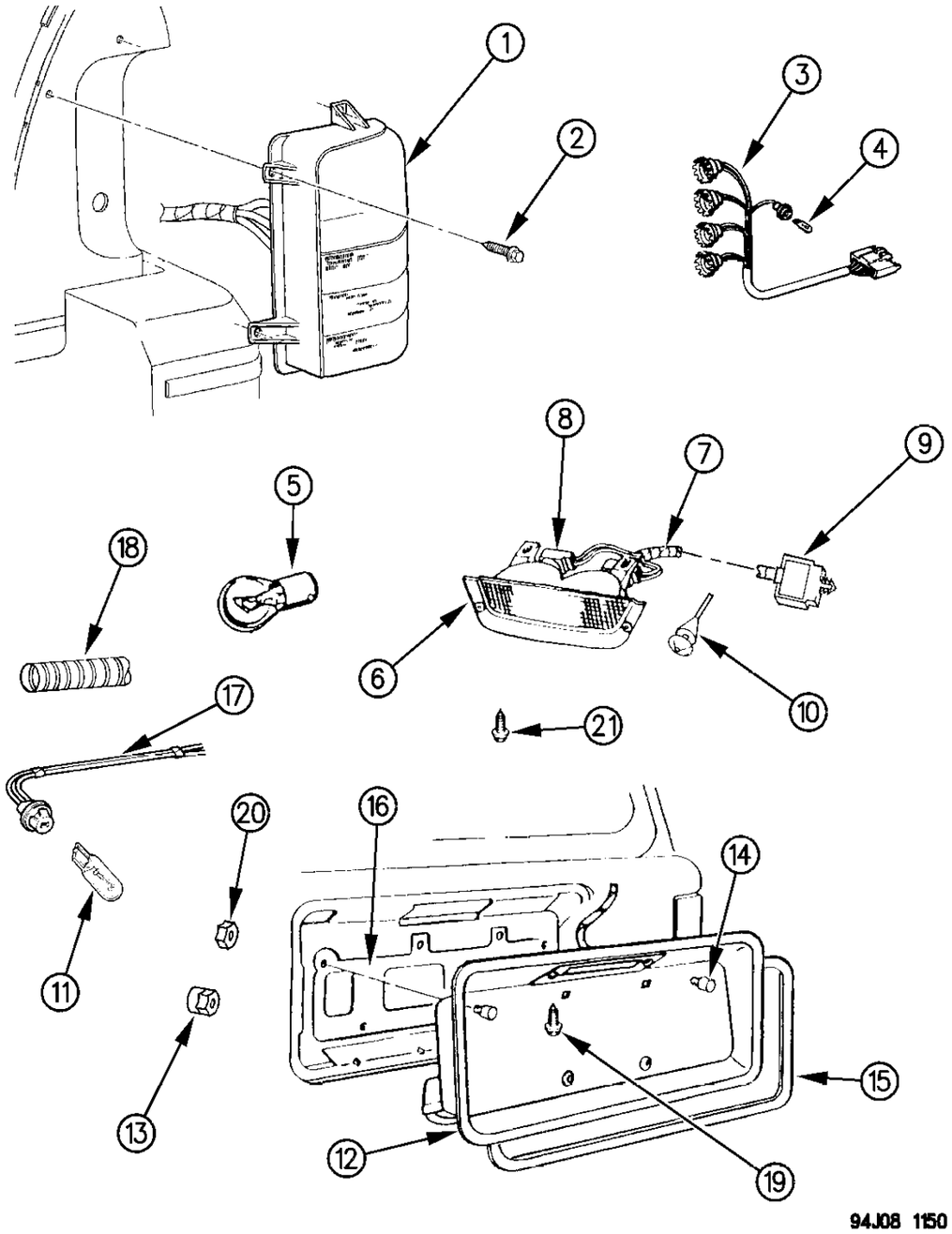

ITEM	PART NUMBER	QTY	BODY	MODEL	DESCRIPTION
1		1			LAMP ASSEMBLY, Rear
					1994-96 w/3 Bulbs
	5515 5110				Right
	5515 5111				Left
					1994-96 Export
	5515 5056				Right w/4 Bulbs
	5515 5116				Right w/3 Bulbs
	5515 5117				Left w/4 Bulbs
-	6502 776	2			CLIP, Taillamp Mtg.
2	6502 064	3	ZJ		SCREW
3		2	ZJ		WIRING, Taillamp
	4761 588				Up to 02/14/94 (6 round pins)
	5600 7560				After 02/14/94 (6 Blade connectors)
		1			Export
	4761 590-1				Up to 02/14/94
	5600 7558-9				After 02/14/94
4	J947 1777	2			BULB, (194)
5	0153 623	AR			BULB, (P21-5)
	9417 866	AR			(1156)
	9438 848	AR			(2057)
	J575 7455	AR			(P25-1)
	J575 7450	AR			(P25-2)
	0153 622	AR			(P21-W)
6		1			LAMP, Center Mount
					TWO-BULB CHMSL
	5505 4984				with tinted glass use with wiring 56005757
	5505 4985				Deep Tinted (Use Wiring 56005747)
	5505 4981				EUROPE
-	0153 938	2			BULB #921 w/2 Bulb CHSML ***
					THREE-BULB CHMSL
	5505 5179				w/Flipper Glass (Sunscreen Quarter)
	5505 5178				w/o Flipper Glass (Tinted Quarter Fixed)
-	0153 988	3			BULB #922 w/3 Bulb CHMSL ***
7		1			WIRING, Center Mount Lamp
	5601 8444				1994 (2-Bulb)
	5601 8668				1995-96 (3-Bulb)
8	4443 991	2	ZJ		SOCKET
9	4274 937	1	ZJ		INSULATOR
10	4399 030	2	ZJ		BUMPER
11	9425 542	1	ZJ		BULB, (168)
12		1	ZJ		HOUSING, License Plate Mounting (P.A.R.)
	5DS3 4MW7				1994-95

MODEL CODES:

72=2 DR Wagon
74=4 DR Wagon
77=Open Body 93" Whlbase
78=Open Body 103" Whlbase - Export
T=2WD
J,N=4WD
U=4WD (RHD)

BODY STYLES:

YJ=Wrangler (4X4) "S"
Weangler (4X4) SE
Wrangler (4X4) Sahara
Wrangler (4X4) Renegade
XJ=Cherokee SE
Cherokee Sport
Cherokee Country
ZJ=Grand Cherokee SE
Grand Cherokee Laredo
Grand Cherolee Limited
ZG=Grand Cherokee European
Y1=Wrangler
X1=Cherokee
Z1=Grand Cherokee
KDX=Vehicles

AR = Use as Required - = Non Illustrated Part P.A.R. = Paint as Required

LAMPS--REAR GRAND CHEROKEE
Figure 8-1150

8-1150

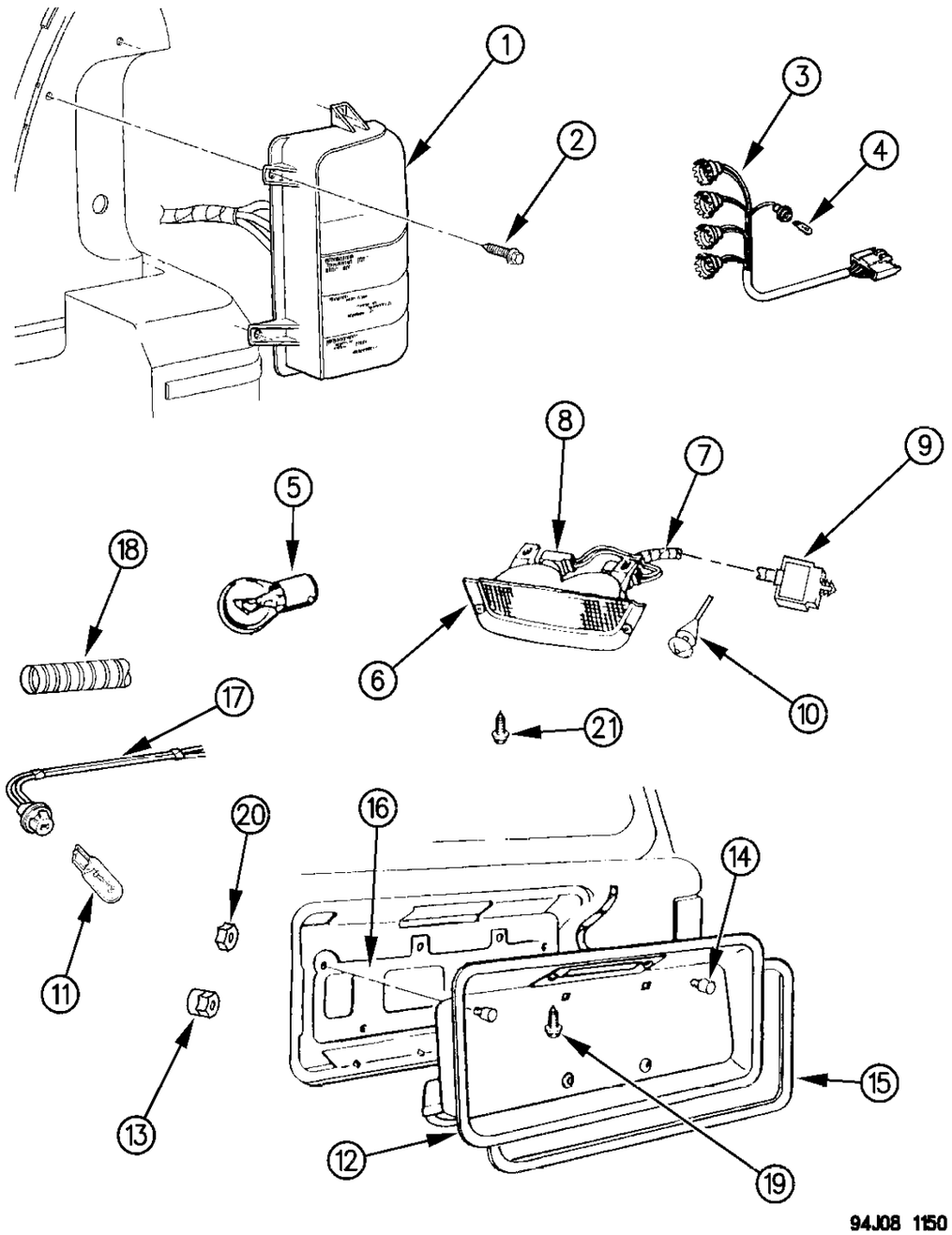

ITEM	PART NUMBER	QTY	BODY	MODEL	DESCRIPTION
	5FF5 6SW1				1996
	5600 7242				PLUG for without flipper glass switch ***
-	3420 2159	4			NUT, Housing to Body
-	5505 4611	2	ZJ		LAMP ASSEMBLY, License
13	J400 4689	4	ZJ		NUT licens plate attaching ***
14	5525 4570	2	ZJ		BUMPER
15	5503 1967	2	ZJ		GASKET
16	5525 4852	1	ZJ		HOUSING, Door Liftgate
17	5505 4954	1	ZJ		WIRING, License Lamp
18	4364 393	1	ZJ		TUBING
19	6034 207	2	ZJ		SCREW
20	3420 2159	4	ZJ		NUT, License Lamp
21		2	ZJ		SCREW (Not Serviced) ***
-	5523 4940-1				REFLECTOR, Rear Fascia, EUROPE

MODEL CODES:

72=2 DR Wagon
74=4 DR Wagon
77=Open Body 93" Whlbase
78=Open Body 103" Whlbase - Export
T=2WD
J,N=4WD
U=4WD (RHD)

BODY STYLES:

YJ=Wrangler (4X4) "S"
Weangler (4X4) SE
Wrangler (4X4) Sahara
Wrangler (4X4) Renegade
XJ=Cherokee SE
Cherokee Sport
Cherokee Country
ZJ=Grand Cherokee SE
Grand Cherokee Laredo
Grand Cherolee Limited
ZG=Grand Cherokee European
Y1=Wrangler
X1=Cherokee
Z1=Grand Cherokee
KDX=Vehicles

AR = Use as Required - = Non Illustrated Part P.A.R. = Paint as Required

LAMPS--REAR CHEROKEE
Figure 8-1155

8-1155

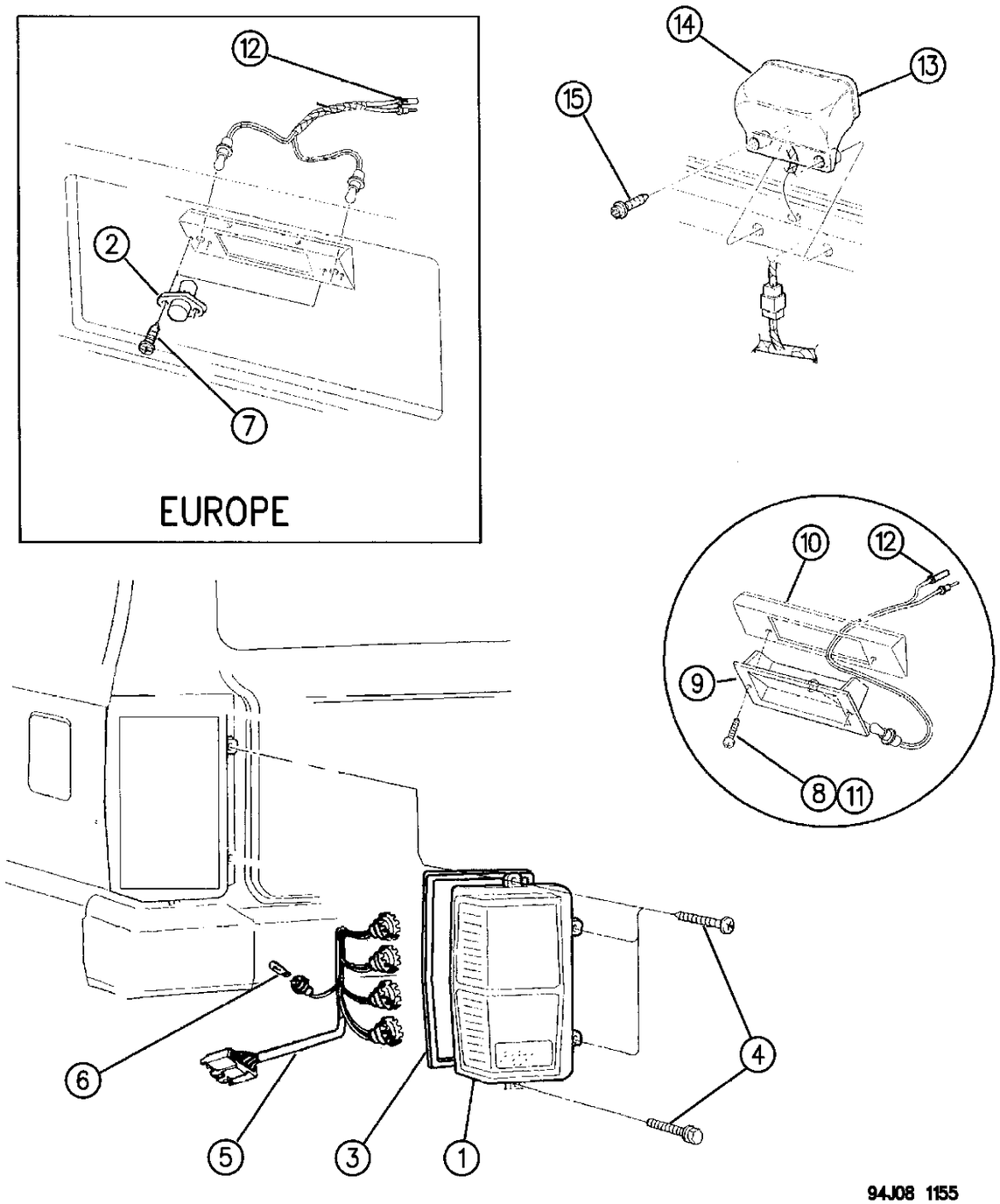

ITEM	PART NUMBER	QTY	BODY	MODEL	DESCRIPTION
1	4720 500-1	1	XJ,X1		TAILLAMP, USA, CANADA, KDX ***
	4720 498-9	1	XJ		EUROPE
2	5600 3898	1	YJ		LAMP, Export
	5600 3898	1	XJ		EUROPE
3	5600 0131	2	XJ		GASKET
4	3420 2205	8	XJ		SCREW
5	5600 6536	2	XJ		WIRING, Taillamp, USA, CANADA, KDX
	5600 5994	2	XJ		EUROPE
6	J947 1777	2			BULB, (194)
7	3420 1721	2			SCREW
8	6034 207	2			SCREW
9	5600 0409	1			LAMP, License
	5505 5109				Outside Mounted Tire Carrier
-	5600 0673	1			COVER ASSEMBLY, License Lamp Hole
10	5600 0411	1			GASKET
11	6034 207	2			SCREW
12	5600 0550	1	XJ		WIRING, License Lamp
	5600 1434	1	XJ		(Dual Lamp) EUROPE
13	5505 4992				LENS, w/Housing, Hi-Mtd. Stop Lamp
14	5DL3 3PS1				COVER, Hi-Mtd. Stop Lamp
	5DL3 3PY6				
-	5521 6027				MOULDING, Hi-Mtd Stop Cover (Seal or Gasket)
-	6035 395	2			CLIP, Mounting
-	5DK9 2PS1				PLUG, Hi-Mtd. Stop Lamp Cover
	5DK9 2PY6				
-	5534 5948				PLATE, Hi-Mtd. Stop Lamp
15					SCREW, Not Serv.

MODEL CODES:

72=2 DR Wagon
74=4 DR Wagon
77=Open Body 93" Whlbase
78=Open Body 103" Whlbase - Export
T=2WD
J,N=4WD
U=4WD (RHD)

BODY STYLES:

YJ=Wrangler (4X4) "S"
Weangler (4X4) SE
Wrangler (4X4) Sahara
Wrangler (4X4) Renegade
XJ=Cherokee SE
Cherokee Sport
Cherokee Country
ZJ=Grand Cherokee SE
Grand Cherokee Laredo
Grand Cherolee Limited
ZG=Grand Cherokee European
Y1=Wrangler
X1=Cherokee
Z1=Grand Cherokee
KDX=Vehicles

AR = Use as Required - = Non Illustrated Part P.A.R. = Paint as Required

« RETURN TO GROUP INDEX

LAMPS--CARGO-DOME-COURTESY-UNDERHOOD WRANGLER
Figure 8-1160

8-1160

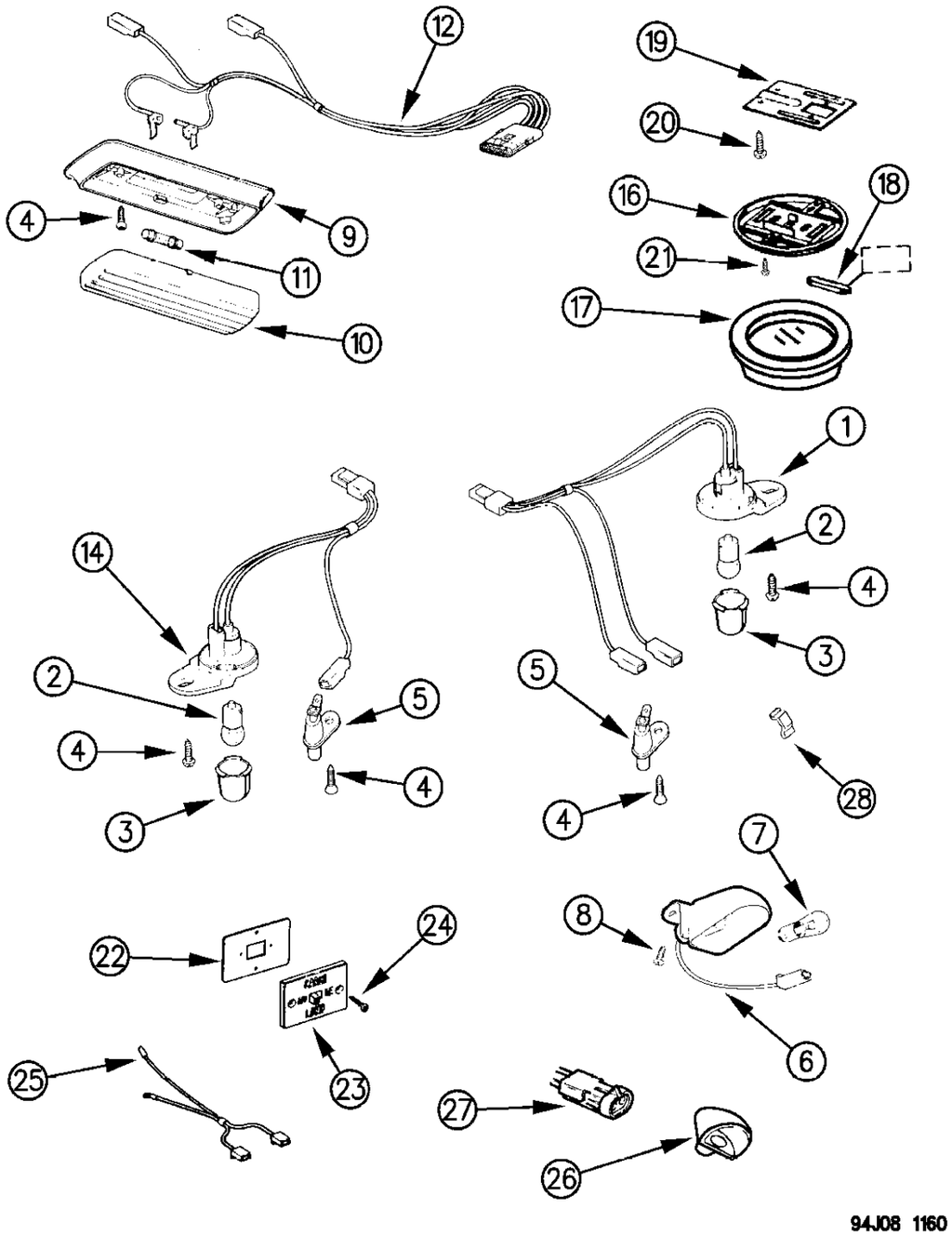

ITEM	PART NUMBER	QTY	BODY	MODEL	DESCRIPTION
1	5601 7442	2			HARNESS, Courtesy Lamp
2	J014 2452	2			BULB, (89)
3	J545 0116	2			LENS
4	J400 3671	AR			SCREW
5	5600 2221	1			SWITCH, Dome Lamp, Right
	5600 2382				Left
6	4741 498	1			LAMP, Underhood
7	9428 606	1			BULB, (105)
8	J400 1042	2			SCREW
9	J095 9999	1			BASE, Dome/Reading Lamp
10	J095 9978	1			LENS, Domelamp
11	9431 809	1			BULB, (212)
12					WIRING, Dome Lamp, (KDX - World Cab)
	J805 3212	1			Front, KDX
	J805 3213	1			Rear, KDX
	5600 5850	1	Y1		EGYPT, VENEZUELA
14	5601 7442	1			Harness, Courtesy Lamp ***
16	J575 1234	2			HOUSING, KDX
17	J368 9643	2			LENS, KDX
18	J400 3086	2			BULB, (56), KDX
19	J805 2259	2			PLATE, Dome Lamp, KDX
20	J400 7487	4			SCREW, KDX
21	3420 1468	4			SCREW, KDX
22	J805 2466	1			PLATE, Switch, KDX
23	J545 1489	1			SWITCH, KDX
24	J812 0054	4			SCREW, KDX
25	J805 3214	1			WIRING, Switch, w/World Cab, KDX
26	5600 6867	1			SHIELD, Underhood Lamp
27	4741 498	1			LAMP, Underhood
28	5521 4892	1			SHIELD

MODEL CODES:

72=2 DR Wagon
74=4 DR Wagon
77=Open Body 93" Whlbase
78=Open Body 103" Whlbase - Export
T=2WD
J,N=4WD
U=4WD (RHD)

BODY STYLES:

YJ=Wrangler (4X4) "S"
Weangler (4X4) SE
Wrangler (4X4) Sahara
Wrangler (4X4) Renegade
XJ=Cherokee SE
Cherokee Sport
Cherokee Country
ZJ=Grand Cherokee SE
Grand Cherokee Laredo
Grand Cherolee Limited
ZG=Grand Cherokee European
Y1=Wrangler
X1=Cherokee
Z1=Grand Cherokee
KDX=Vehicles

AR = Use as Required - = Non Illustrated Part P.A.R. = Paint as Required

« RETURN TO GROUP INDEX

LAMPS--CARGO-DOME-COURTESY-UNDERHOOD CHEROKEE--GRAND CHEROKEE
Figure 8-1165

8-1165A

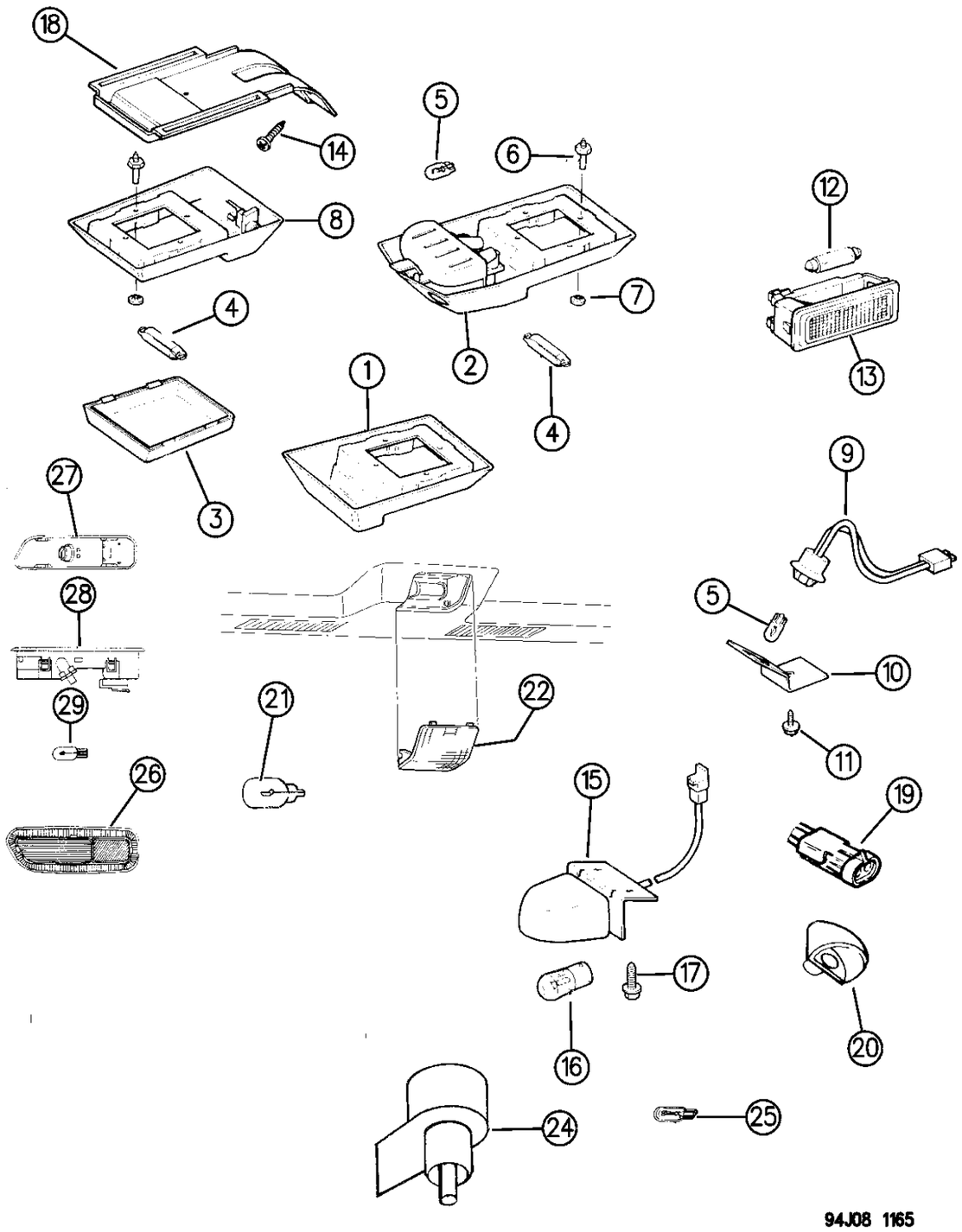

ITEM	PART NUMBER	QTY	BODY	MODEL	DESCRIPTION
1	5BA6 8KY6	1	XJ		LAMP, Dome (P.A.R.)
2	5BA6 7KY6		XJ		LAMP, Dome/Reading, Cherokee (P.A.R.)
3	5600 0191	1	XJ		LENS, Dome Lamp
4	J400 3086	AR			BULB, (561)
5					BULB
	J943 6750	2			Reading Lamp, (106)
	9428 606	1			Underhood Lamp, (105)
6		2			STUD, Mounting
	3420 1533		XJ		Dome Light
	6503 673		ZJXJ		Cargo Light
7	J400 0459	2	XJ		NUT
8	5BA7 0KY6	1	XJ		LAMP, Cargo (P.A.R.)
-	6502 689	8			RIVET
9	5600 4406	2	XJ		LAMP, Courtesy
10	5502 4890	2	XJ		BRACKET
11	1150 2843	2	XJ		SCREW
12	T309 7183	AR			BULB, Dome Lamp
13	T134 9760	1			LAMP, Dome, Chrome
14	J448 9487	2	XJ		SCREW
15	5600 6756	1	XJ		LAMP, Underhood (Chrome Metal)
16	J812 5442	1	XJ		BULB, (105)
17	3420 1691	2	XJ		SCREW
18	5500 2812	1	XJ		BRACKET, Cargo Lamp
19	4741 498	1	XJ		LAMP, Underhood (Plastic) U.S.A. & EUROPE
	5600 6766		ZJ		Lamp, Underhood ***
20	5600 6867	1	XJ,ZJ		SHIELD, Underhood Lamp
21	9428 606	2	ZJ		BULB, (105)
22					LENS
	5600 5428	1	ZJ		Cargo
	5604 2072	1	ZJ		Dome Lamp
-					LAMP, Dome/Reading Grand Cherokee
			ZJ		w/o Keyless Entry
	5AS3 6LD5	1			Medium Quartz, (P.A.R.) 1994-95
	5AS3 6SAZ	1			Agate 1996
	5AS3 6ST6	1			Spice/Saddle 1996
	5AS3 6SC1	1			BLUE (GRAY)
			ZJ		w/Keyless Entry
	4728 001	1			Silver 1994-95
	4728 002	1			Driftwood 1994-95
	4740 180	1			Champagne 1994-95
23	4565 031	2	ZJ		SWITCH, Push-Push
24	J400 3086	1	ZJ		BULB

MODEL CODES:

72=2 DR Wagon
74=4 DR Wagon
77=Open Body 93" Whlbase
78=Open Body 103" Whlbase - Export
T=2WD
J,N=4WD
U=4WD (RHD)

BODY STYLES:

YJ=Wrangler (4X4) "S"
Weangler (4X4) SE
Wrangler (4X4) Sahara
Wrangler (4X4) Renegade
XJ=Cherokee SE
Cherokee Sport
Cherokee Country
ZJ=Grand Cherokee SE
Grand Cherokee Laredo
Grand Cherolee Limited
ZG=Grand Cherokee European
Y1=Wrangler
X1=Cherokee
Z1=Grand Cherokee
KDX=Vehicles

AR = Use as Required - = Non Illustrated Part P.A.R. = Paint as Required

LAMPS--CARGO-DOME-COURTESY-UNDERHOOD CHEROKEE--GRAND CHEROKEE
Figure 8-1165

8-1165A

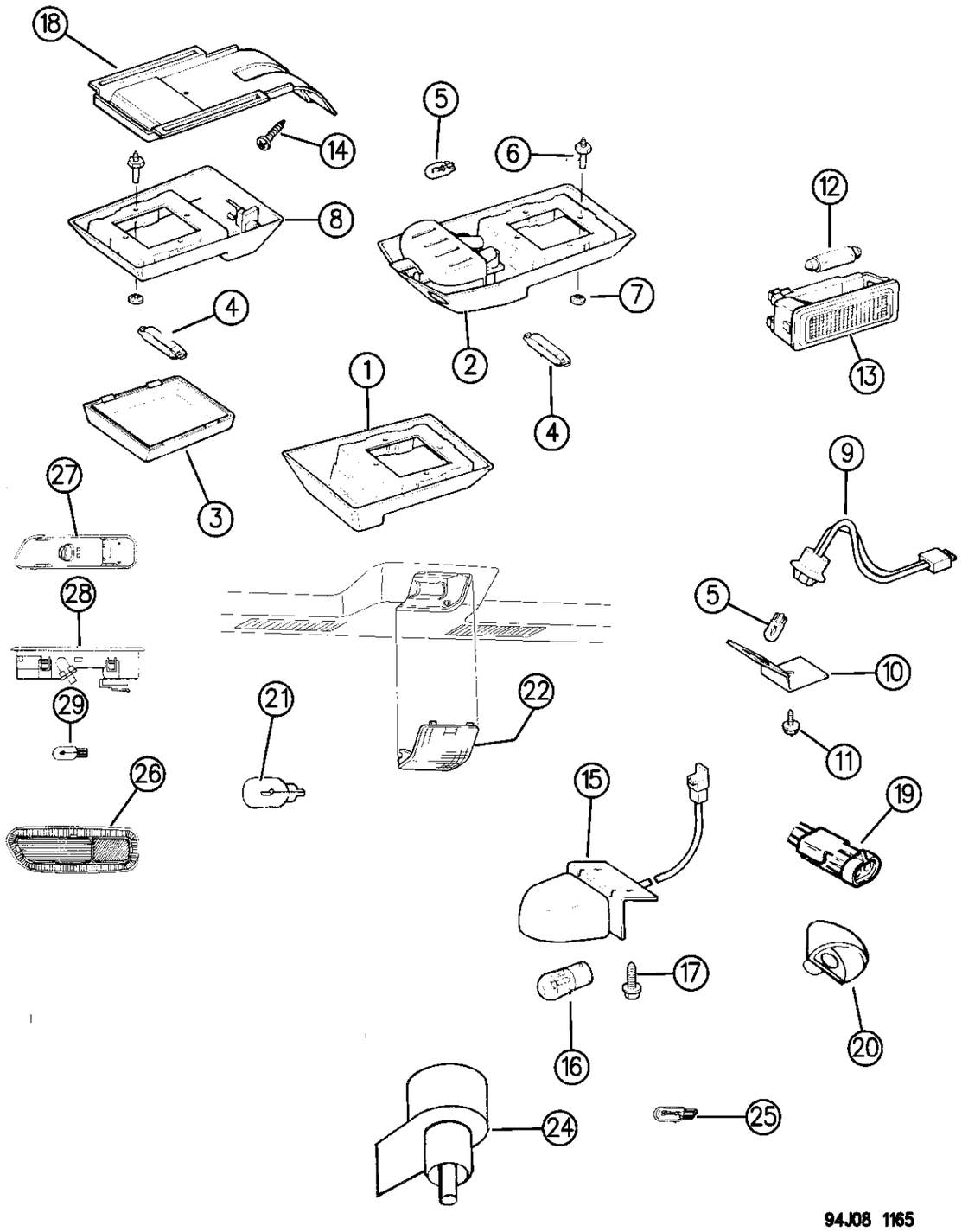

ITEM	PART NUMBER	QTY	BODY	MODEL	DESCRIPTION
25		2			LENS (Serviced in Item #28) ***
26		1	ZJ		HOUSING, Courtesy Lamp, (Serv. w/#26)
-	5503 1730-1				REFLECTOR, Frt. Door Trim Panel
-	4798 796-7	1	ZJ		LAMP, Courtesy Front Door Trim (LIMITED)
27		1			LAMP, Courtesy
	5600 5076				Right
	5600 5077				Left
28	9425 542	AR	ZJ		BULB, Courtesy (168)

MODEL CODES:

72=2 DR Wagon
74=4 DR Wagon
77=Open Body 93" Whlbase
78=Open Body 103" Whlbase - Export
T=2WD
J,N=4WD
U=4WD (RHD)

BODY STYLES:

YJ=Wrangler (4X4) "S"
Weangler (4X4) SE
Wrangler (4X4) Sahara
Wrangler (4X4) Renegade
XJ=Cherokee SE
Cherokee Sport
Cherokee Country
ZJ=Grand Cherokee SE
Grand Cherokee Laredo
Grand Cherolee Limited
ZG=Grand Cherokee European
Y1=Wrangler
X1=Cherokee
Z1=Grand Cherokee
KDX=Vehicles

AR = Use as Required - = Non Illustrated Part P.A.R. = Paint as Required

BULBS ALL MODELS
Figure 8-1170

8-1170

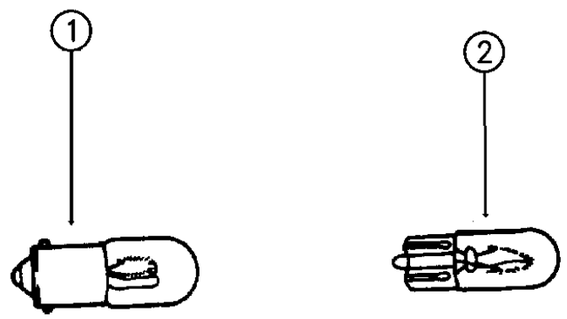

ITEM	PART NUMBER	QTY	BODY	MODEL	DESCRIPTION
1					BULB, Exterior
	9417 866			ALL	Back-Up Lamp, #1156
		AR			Hi-Mtd. Stop Lamp
	0153 938				(No. 921) 2 Bulb CHMSL
	0153 988				(No. 922) 3 bULB CHMSL
				ZJ	Fog Lamp, #H-3
	3600 3101			ZJ	Turn Signal Front, #1295NA
	9438 850			XJYJ	Park & Turn Signal, Front, #2057NA
	9438 068			ZJ	Side Marker Front, #194NA
				XJYJ	Side Marker, Front
	9421 330				# 194
	9438 848				# 2057
	0154 509				T3157 (Clear)
	0154 525				T3157 (Amber)
	4388 238				Headlamp, #H6054
	0153 590			YJ	Seal Beam, #6054
	9425 542			ZJ,XJ	License Plate, #168
	0142 450			XJ	License Lamp, #67
	9438 848			ZJ	Tail/Stop, Rear, #2057
	0153 624				EUROPE
	9438 848			YJ	Tail/Stop/Turn, #1157
	9438 848			XJ	Tail/Stop, #2057
	9417 866			ZJ	Turn Signal, Rear, #1156
	9428 606				Underhood Lamp, #105
2					BULBS, Interior ***
					Ash Reciever
	0152 244			ZJ,YJ,XJ	#1891 (1994-95)
	9417 561			ZJ	#161 (1996)
	9431 809			ZJ	Cargo Lamp, #212-2
	4437 590			ALL	Airbag Prem. Cluster--Brake Sys. Warning--4 Wheel Ind.--Hi Beam Ind.--Inst. Cluster--Low Fuel--Turn Sign.--Volts Ind., (PC194)
	J400 3086			XJ	Cargo Lamp, #561
	9431 809			YJ	Cargo/Dome, Hardtop, #212
	0131 282			ALL	Cigarette Lighter, #53
	9433 184			ALL	Climate Control, #74
	9421 330			ZJ	Console Floor Shifter, #PC194
	9437 448			XJ	PRNDL
	9436 750			ZJ	Dome/Reading, #561 & 906
	9425 542			ZJ	Door Courtesy, #168
	9421 330			ALL	Glove Compartment, #PC194
	9421 330			YJ	Heater Control Lamp, #194

MODEL CODES:

72=2 DR Wagon
74=4 DR Wagon
77=Open Body 93" Whlbase
78=Open Body 103" Whlbase - Export
T=2WD
J,N=4WD
U=4WD (RHD)

BODY STYLES:

YJ=Wrangler (4X4) "S"
Weangler (4X4) SE
Wrangler (4X4) Sahara
Wrangler (4X4) Renegade

XJ=Cherokee SE
Cherokee Sport
Cherokee Country

ZJ=Grand Cherokee SE
Grand Cherokee Laredo
Grand Cherolee Limited
ZG=Grand Cherokee European

Y1=Wrangler
X1=Cherokee
Z1=Grand Cherokee
KDX=Vehicles

94J08 1170

AR = Use as Required - = Non Illustrated Part P.A.R. = Paint as Required

BULBS ALL MODELS
Figure 8-1170

8-1170

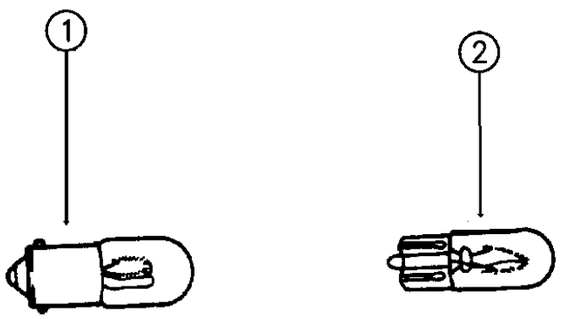

ITEM	PART NUMBER	QTY	BODY	MODEL	DESCRIPTION
	9431 809			ZJ	Overhead Console, #212-2
	9437 173			XJ	Overhead Console, #912
				ZJ	Radio, (Service Center)
	9436 789				Rocker Switch, #37
	9433 184			YJ	Rocker Switch, #74
	9421 330			ZJ	Transfer Case Shifter, #PC194
	9425 542			XJ	Under Panel Courtesy, #168
	6501 966			ZJ	Vanity Mirror
	6501 966			XJ	Vanity Mirror
	4864 512		ZJ		BULB Rear Wiper Switch pod ***

MODEL CODES:

72=2 DR Wagon
74=4 DR Wagon
77=Open Body 93" Whlbase
78=Open Body 103" Whlbase - Export
T=2WD
J,N=4WD
U=4WD (RHD)

BODY STYLES:

YJ=Wrangler (4X4) "S"
Weangler (4X4) SE
Wrangler (4X4) Sahara
Wrangler (4X4) Renegade
XJ=Cherokee SE
Cherokee Sport
Cherokee Country
ZJ=Grand Cherokee SE
Grand Cherokee Laredo
Grand Cherolee Limited
ZG=Grand Cherokee European
Y1=Wrangler
X1=Cherokee
Z1=Grand Cherokee
KDX=Vehicles

94J08 1170

AR = Use as Required - = Non Illustrated Part P.A.R. = Paint as Required

WIRING--ENGINE AND RELATED PARTS WRANGLER
Figure 8-1205

8-1205A

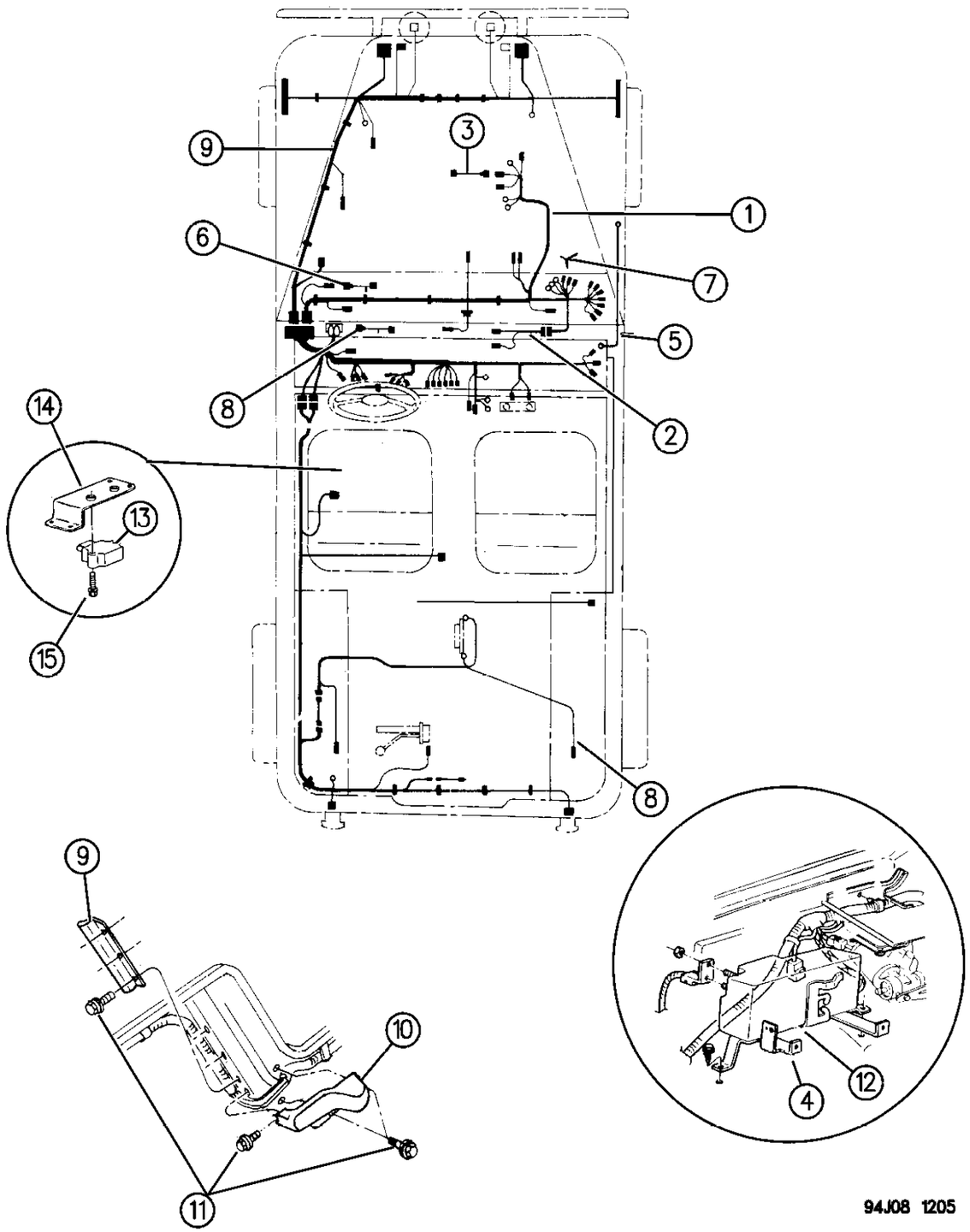

ITEM	PART NUMBER	QTY	BODY	MODEL	DESCRIPTION
1		1			WIRING, Engine, 4-Cyl., Eng. & Trans.
	5601 8098				1994
	5600 9112				1995
	5601 8097	1			6 Cyl. Eng., w/o A.B.S.
		1			6 Cyl. Eng., w/A.B.S.
	5601 9123				(ER0) Gas w/A.B.S. 1994
	5601 8096				(ERH) MPI High Output Gas w/A.B.S. 1994
	5600 9110				(ER0) Gas w/A.B.S. 1995
	5601 8099	1	Y1		6 Cyl. Eng., w/o Radio, Egypt, Venezuela
-	5600 5498				TROUGH, Injector Wiring ***
-	5600 4597				COVER, Injector Wiring, 4-Cyl.
	5601 7364				6-Cyl.
2	5601 8274				WIRING, Transmission Jumper (Auto. Trans.)
	5600 7587	1			Wiring, Transmission w/auto 1995 ***
	5600 7588				wiring, Transmiision w/ Manual Trans 1995 ***
	5601 8275				(Man. Trans.)
3					WIRING, Alternator, Use Item #1
4	5534 4768	1			BRACKET, Pwr. Distribution Center
5		1			CABLE, Starter (Body to Eng. Ground)
	5603 0055				Up to 10/19/94
	5600 9038				After 10/19/94
6	5600 6171	1			WIRING, 4x4 Jumper Switch
7	5601 7763				WIRING, Battery
8		1			WIRING, Speed Warning, (Serv. In Inst. Panel Wire)
9	5600 5948	1			COVER, Body Harness Upper
10	5600 5946	1			COVER, Body Harness Lower, Rt.
	5600 5807				Lt.
11					SCREW, (Not Serv.)
12	5601 7018	1			HOUSING, Power Distribution Center
-	5600 5871	1			COVER, Lower
	5600 5873	1			COVER, Upper
13	5600 6315	1			SWITCH, Accelerator ABS
14	5602 6739	1			BRACKET, Accelerator ABS
15	6034 484	AR			SCREW, Accelerator Switch to bracket

MODEL CODES:

72=2 DR Wagon
74=4 DR Wagon
77=Open Body 93" Whlbase
78=Open Body 103" Whlbase - Export
T=2WD
J,N=4WD
U=4WD (RHD)

BODY STYLES:

YJ=Wrangler (4X4) "S"
Weangler (4X4) SE
Wrangler (4X4) Sahara
Wrangler (4X4) Renegade
XJ=Cherokee SE
Cherokee Sport
Cherokee Country
ZJ=Grand Cherokee SE
Grand Cherokee Laredo
Grand Cherolee Limited
ZG=Grand Cherokee European
Y1=Wrangler
X1=Cherokee
Z1=Grand Cherokee
KDX=Vehicles

AR = Use as Required - = Non Illustrated Part P.A.R. = Paint as Required

« RETURN TO GROUP INDEX

WIRING--ENGINE AND RELATED PARTS CHEROKEE
Figure 8-1210

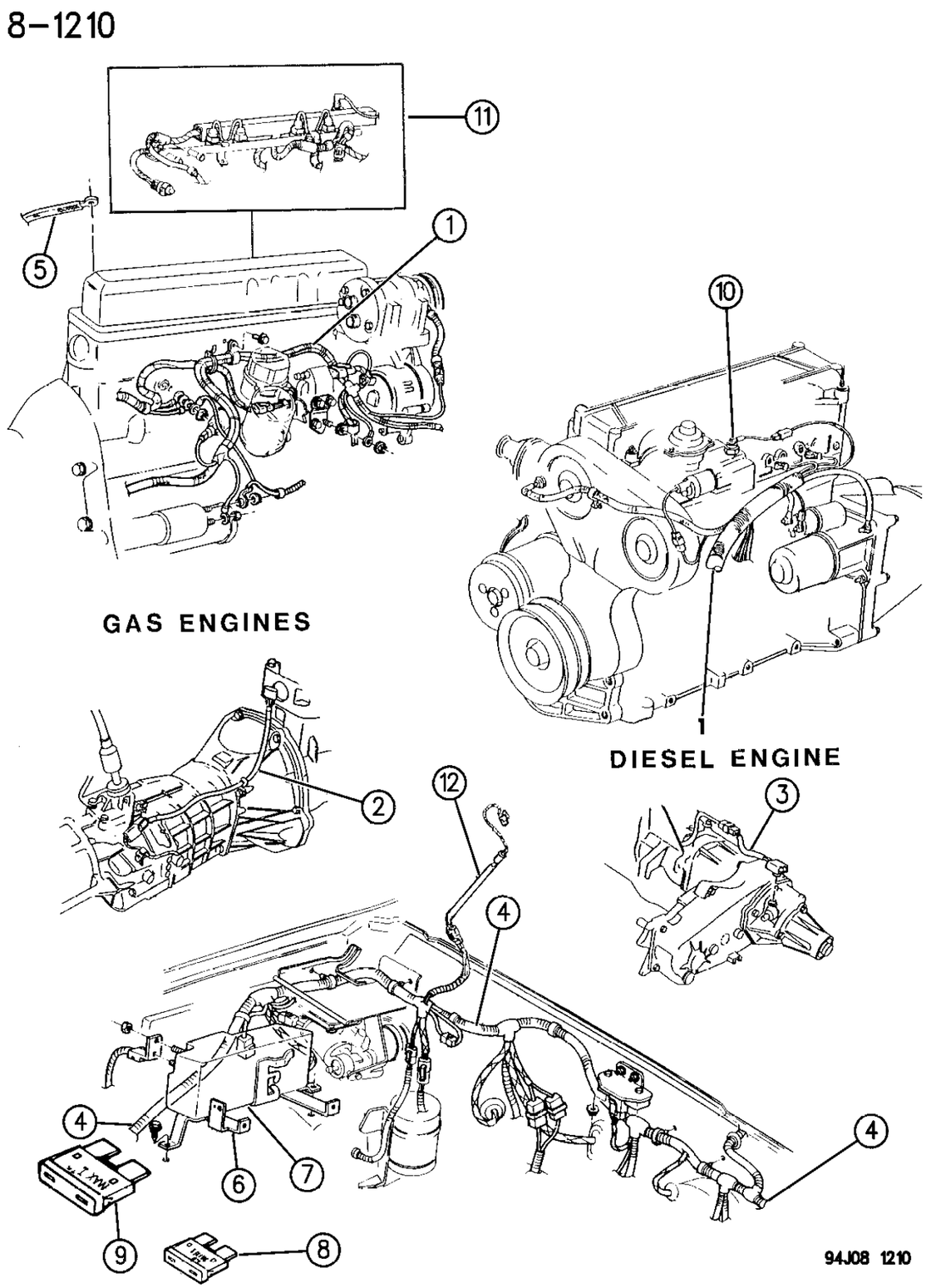

ITEM	PART NUMBER	QTY	BODY	MODEL	DESCRIPTION
1					WIRING, Engine
					**** 1994-95 ****
	5601 7872	1			2.5L Eng., Auto. Trans. (includes battery harness)
	5601 7370				2.5 Eng., Man. Trans. (L.H.D.)
	5601 8336	1			2.5 Eng., Man. Trans. (R.H.D.)
	5601 7779				4.0 Eng Auto Trans.
	5601 7776				4.0 Eng Man. Trans.
	5601 8028	1			Diesel, EUROPE
					**** 1996 ****
	5601 0078	1			2.5 Eng. Auto Trans
	5601 0082	1			2.5 Eng. Man Trans, LHD
	5601 0079	1			2.5 Eng. Man Trans, RHD
	5601 0080	1			4.0 Eng. Auto Trans
	5601 0081	1			4.0 Eng. Man Trans
-	3600 1676	AR			DIODE, ABS
2					WIRING, Transmission
	8350 3718	1			6 Cyl. Eng., Auto. Trans., 2 WD
	8350 3843	1			6 Cyl. Eng., Auto. Trans., 4 WD
	5601 8747				China
3					WIRING, Speed Sensor
	5600 2600	1			6 Cyl. Eng., Auto. Trans., w/Select Trac 1994-1995
	5600 7650				1996 with 242 Transfer Case ***
	5600 8736	1			w/Command Trac.
4					WIRING, Headlamp and Dash (Illus. 1310)
5	5600 0761	1			STRAP, Ground, 4 & 6 Cyl. Eng.
6	5601 7142				BRACKET, Power Distribution Center
	5601 7837				(RHD)
7		1			HOUSING, Power Distribution Center, 2.5 & 4.0 Eng.
	5601 7018				1994-95
					1996 (Serviced in H/Lamp & Dash Harness)
-		1			COVER, Lower
	5600 5871				1994-95
					1996 (Serviced in H/Lamp & Dash Harness)
-		1			COVER, Upper
	5601 7296				1994-95
	5600 8894				1996
8					FUSE, Mini
	6101 481	AR			2 Amp. Gray
	6101 484	AR			5 Amp. Tan
	6101 485	AR			7.5 Amp. Brown
	6101 486	AR			10 Amp. Red
	6101 487	AR			15 Amp. Blue

MODEL CODES:

72=2 DR Wagon
74=4 DR Wagon
77=Open Body 93" Whlbase
78=Open Body 103" Whlbase - Export
T=2WD
J,N=4WD
U=4WD (RHD)

BODY STYLES:

YJ=Wrangler (4X4) "S"
Weangler (4X4) SE
Wrangler (4X4) Sahara
Wrangler (4X4) Renegade
XJ=Cherokee SE
Cherokee Sport
Cherokee Country
ZJ=Grand Cherokee SE
Grand Cherokee Laredo
Grand Cherolee Limited
ZG=Grand Cherokee European
Y1=Wrangler
X1=Cherokee
Z1=Grand Cherokee
KDX=Vehicles

AR = Use as Required - = Non Illustrated Part P.A.R. = Paint as Required

WIRING--ENGINE AND RELATED PARTS CHEROKEE
Figure 8-1210

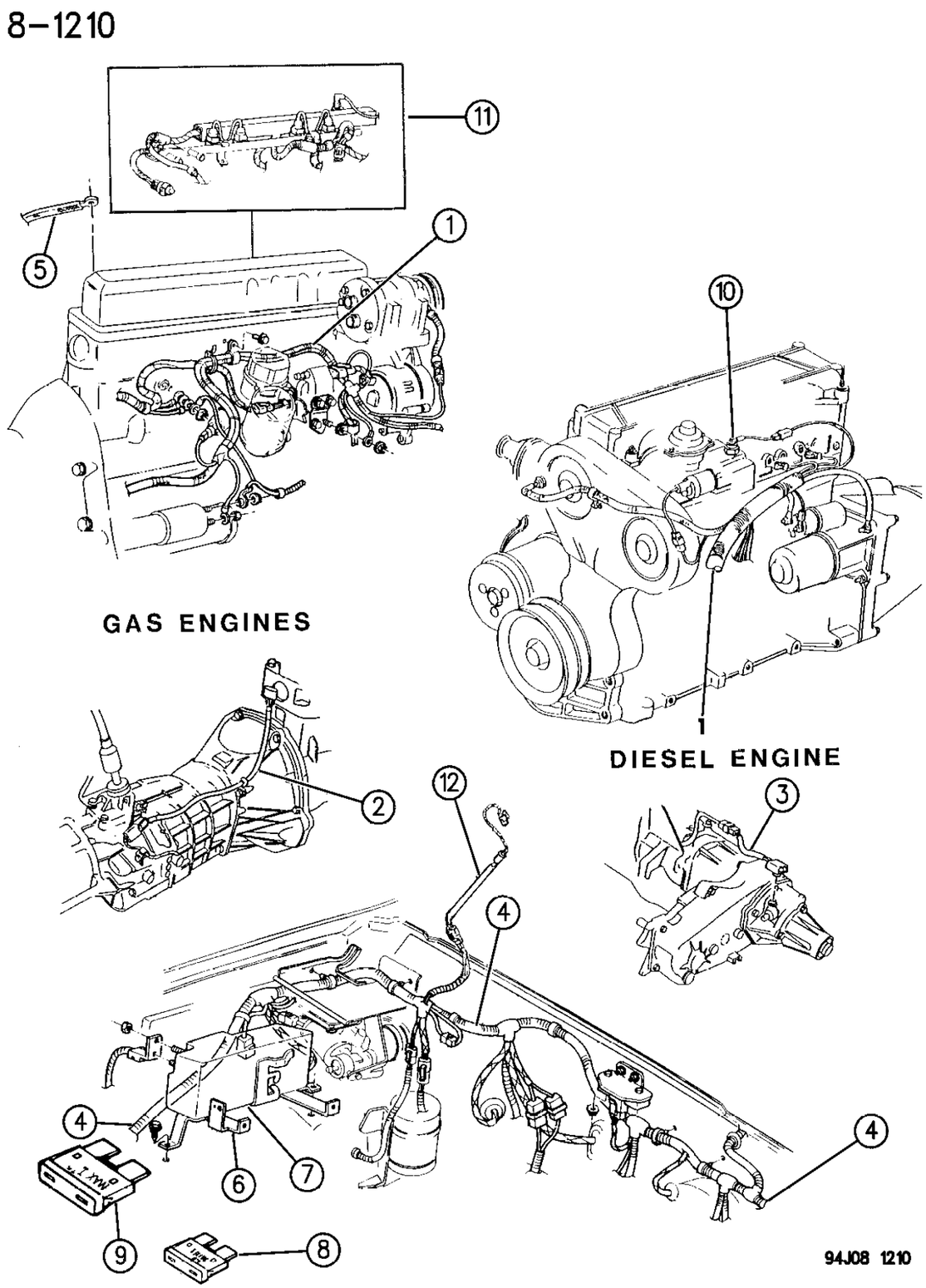

ITEM	PART NUMBER	QTY	BODY	MODEL	DESCRIPTION
	6101 488	AR			20 Amp. Yellow
9					FUSE, Maxi
	6101 679	AR			20 Amp. Yellow
	6101 640	AR			30 Amp. Green
	6101 641	AR			40 Amp. Amber
	6101 642	AR			50 Amp. Red
	6101 643	AR			60 Amp. Blue
	6101 645	AR			80 Amp. Natural
10	5600 1345	1			WIRING, Fuel Shut-Off Solenoid, Diesel Eng. EUROPE
-	J309 7336	1			TERMINAL, Wire
11					COVER, Injector Harness
	5600 4597	1			4 Cyl. Eng.
	5601 7364	1			6 Cyl. Eng.
12		1			WIRING, Underhood Lamp Jumper (Serv. In H/Lamp & Dash Wiring)
	5601 8650	1	XJ		WIRING ASSEMBLY, Jumper Starter (EUROPE 2.5L TurboDiesel) ***

MODEL CODES:

72=2 DR Wagon
74=4 DR Wagon
77=Open Body 93" Whlbase
78=Open Body 103" Whlbase - Export
T=2WD
J,N=4WD
U=4WD (RHD)

BODY STYLES:

YJ=Wrangler (4X4) "S"
Weangler (4X4) SE
Wrangler (4X4) Sahara
Wrangler (4X4) Renegade
XJ=Cherokee SE
Cherokee Sport
Cherokee Country
ZJ=Grand Cherokee SE
Grand Cherokee Laredo
Grand Cherolee Limited
ZG=Grand Cherokee European
Y1=Wrangler
X1=Cherokee
Z1=Grand Cherokee
KDX=Vehicles

AR = Use as Required - = Non Illustrated Part P.A.R. = Paint as Required

WIRING--ENGINE AND RELATED PARTS GRAND CHEROKEE
Figure 8-1215

8-1215A

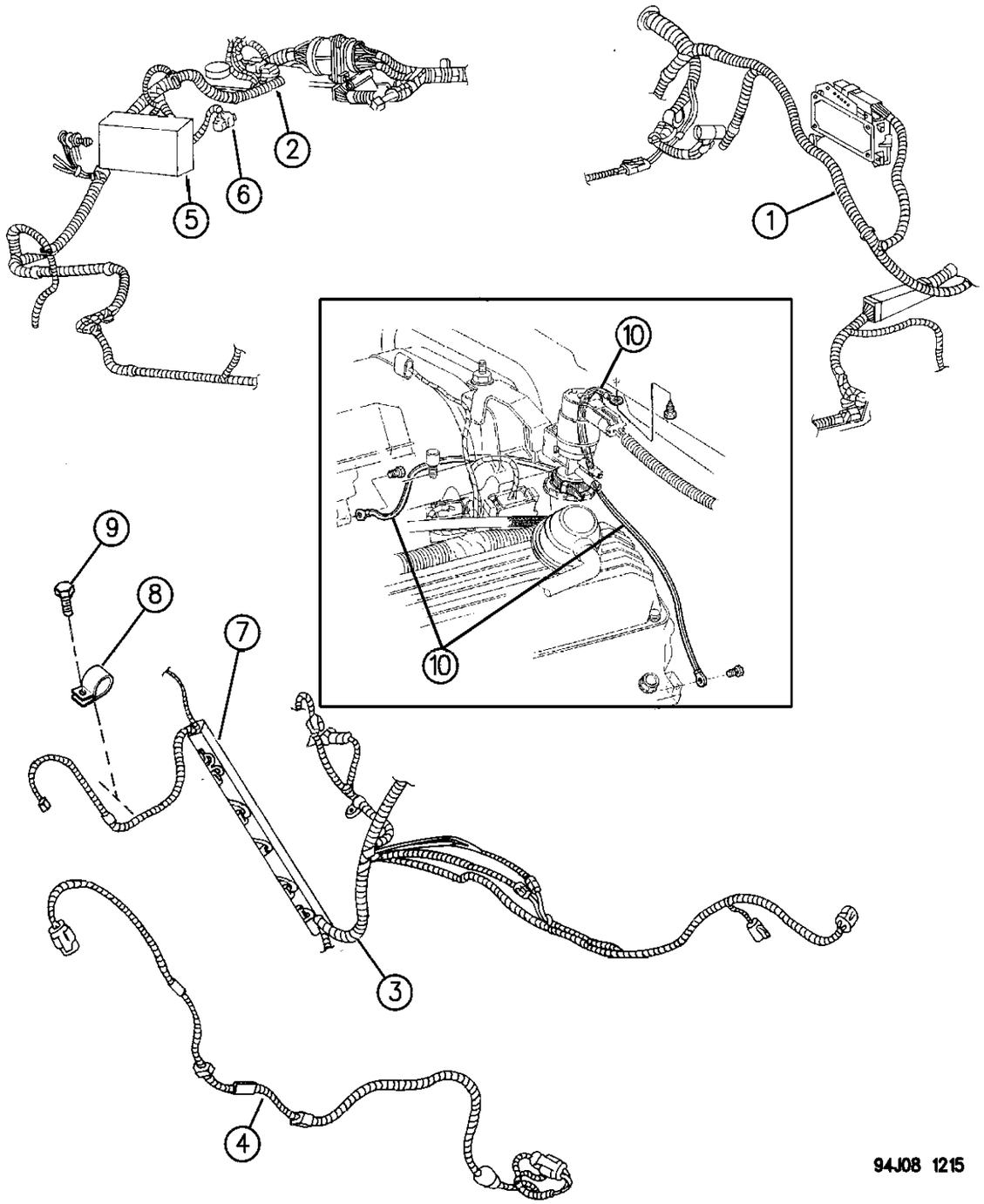

ITEM	PART NUMBER	QTY	BODY	MODEL	DESCRIPTION
1	5601 8773				WIRING, Eng. Compartment, Lt.
	5601 9528				1995
	5601 8871	1			EUROPE
	5601 8931				1995
	5604 2825			ZG	1996 w/Diesel Engine
				ZJ,ZG,Z1	1996 (See Headlamp to Dash Harness)
2	5601 8774				WIRING, Rt., w/ or w/o Overhead Console,w/Fog Lam ps
	5601 9529				1994-95
	5601 8776				w/o Overhead Console, w/o Fog Lamps
	5601 8934				1994-95
		1			EUROPE
	5601 8921				1994
	5601 8935				1995
3		1			WIRING, Injector (Includes Insul. For 4 W.D. Ind. Light) (6-Cyl. Man. Trans.) w/60 way Connector forPower Control Module.
	5601 8756				1994
	5601 9526				1995
	5603 6889		ZG		1996 (RHD)
					w/Auto. Trans., 8-Cyl.
	5601 8757				1994
	5601 9869				1995
					w/Auto. Trans., 6-Cyl.
	5601 8758				1994
	5601 9527				1995
	5604 2126				1996 (6 Cylinder 4.0L)
	5604 2127				1996 (8 Cylinder 318 Engine)
-		1			WIRING, Jumper, Diagnostic/Cruise
	5601 7948				1994
	5600 8848				1995
4	5601 8694	1			WIRING, Underhood Lamp
5					HOUSING, PDC
	5601 7429				1994-95
					1996 (Serviced in Wiring Assembly)
-					COVER, PDC, Bottom (Not Serv.)
-					COVER, PDC, Top
	5601 7949				1994
	5601 9696				1995
	5604 2444				1996
-	5601 8572	1			BRACKET, Mounting 1994-95
	5600 8828	1			1996
	3420 1680	2			NUT, Bracket Mounting
6	4437 394	1			MODULE, Daytime Running Lights (Illus. 405)

MODEL CODES:

72=2 DR Wagon
74=4 DR Wagon
77=Open Body 93" Whlbase
78=Open Body 103" Whlbase - Export
T=2WD
J,N=4WD
U=4WD (RHD)

BODY STYLES:

YJ=Wrangler (4X4) "S"
Weangler (4X4) SE
Wrangler (4X4) Sahara
Wrangler (4X4) Renegade
XJ=Cherokee SE
Cherokee Sport
Cherokee Country
ZJ=Grand Cherokee SE
Grand Cherokee Laredo
Grand Cherolee Limited
ZG=Grand Cherokee European
Y1=Wrangler
X1=Cherokee
Z1=Grand Cherokee
KDX=Vehicles

AR = Use as Required - = Non Illustrated Part P.A.R. = Paint as Required

WIRING--ENGINE AND RELATED PARTS GRAND CHEROKEE
Figure 8-1215

8-1215A

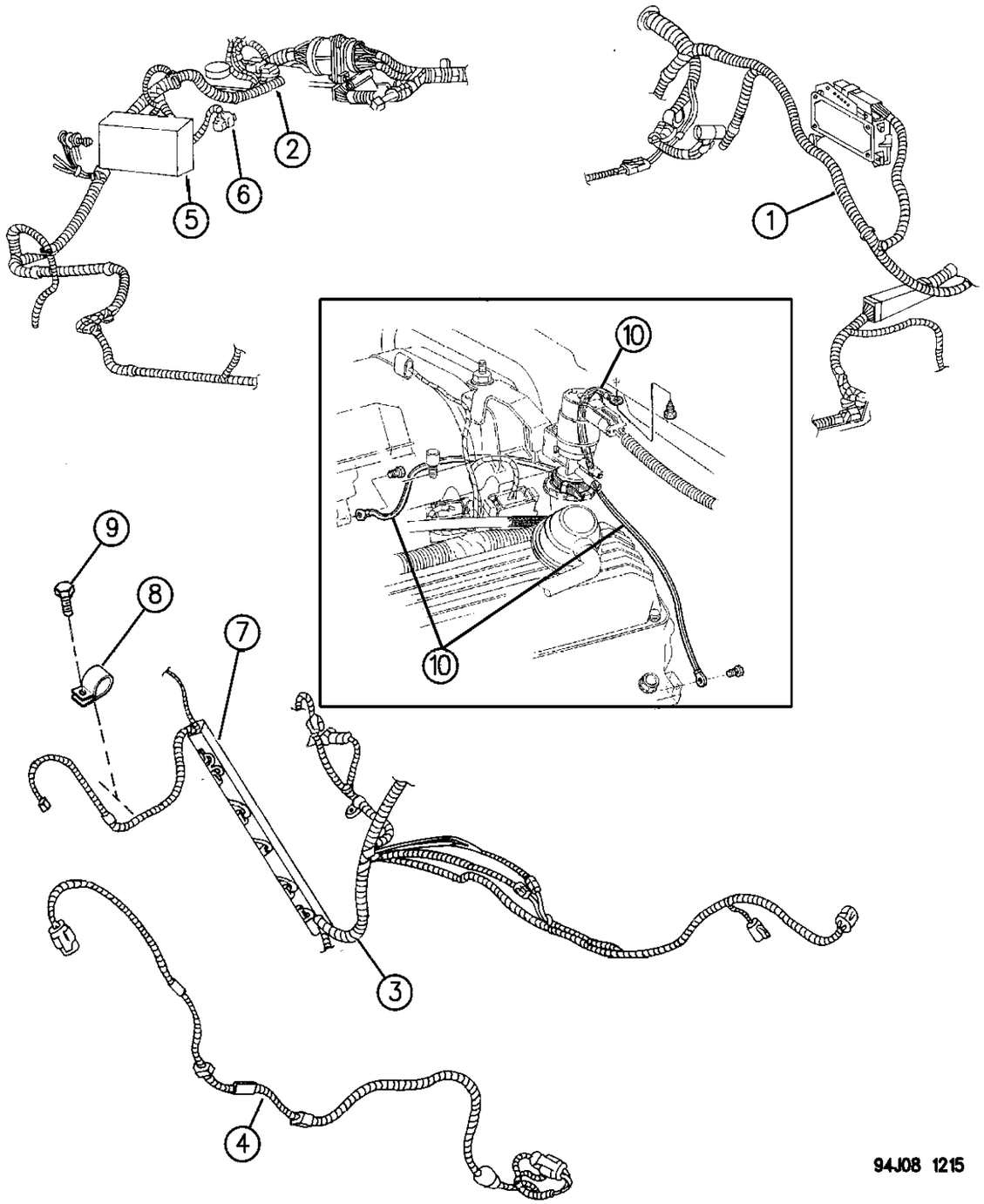

ITEM	PART NUMBER	QTY	BODY	MODEL	DESCRIPTION
7	5601 7364	1			COVER, Injector Harness
8	J400 3993	1			CLIP
9	J400 6887	1			BOLT, w/Washer
-	#5600 7524	2			GROUND Strap Radio Supression ***
10	5600 7524	2			STRAP, Ground

MODEL CODES:

72=2 DR Wagon
74=4 DR Wagon
77=Open Body 93" Whlbase
78=Open Body 103" Whlbase - Export
T=2WD
J,N=4WD
U=4WD (RHD)

BODY STYLES:

YJ=Wrangler (4X4) "S"
Weangler (4X4) SE
Wrangler (4X4) Sahara
Wrangler (4X4) Renegade

XJ=Cherokee SE
Cherokee Sport
Cherokee Country

ZJ=Grand Cherokee SE
Grand Cherokee Laredo
Grand Cherolee Limited
ZG=Grand Cherokee European

Y1=Wrangler
X1=Cherokee
Z1=Grand Cherokee
KDX=Vehicles

AR = Use as Required - = Non Illustrated Part P.A.R. = Paint as Required

WIRING--HEADLAMP TO DASH WRANGLER
Figure 8-1305

8-1305

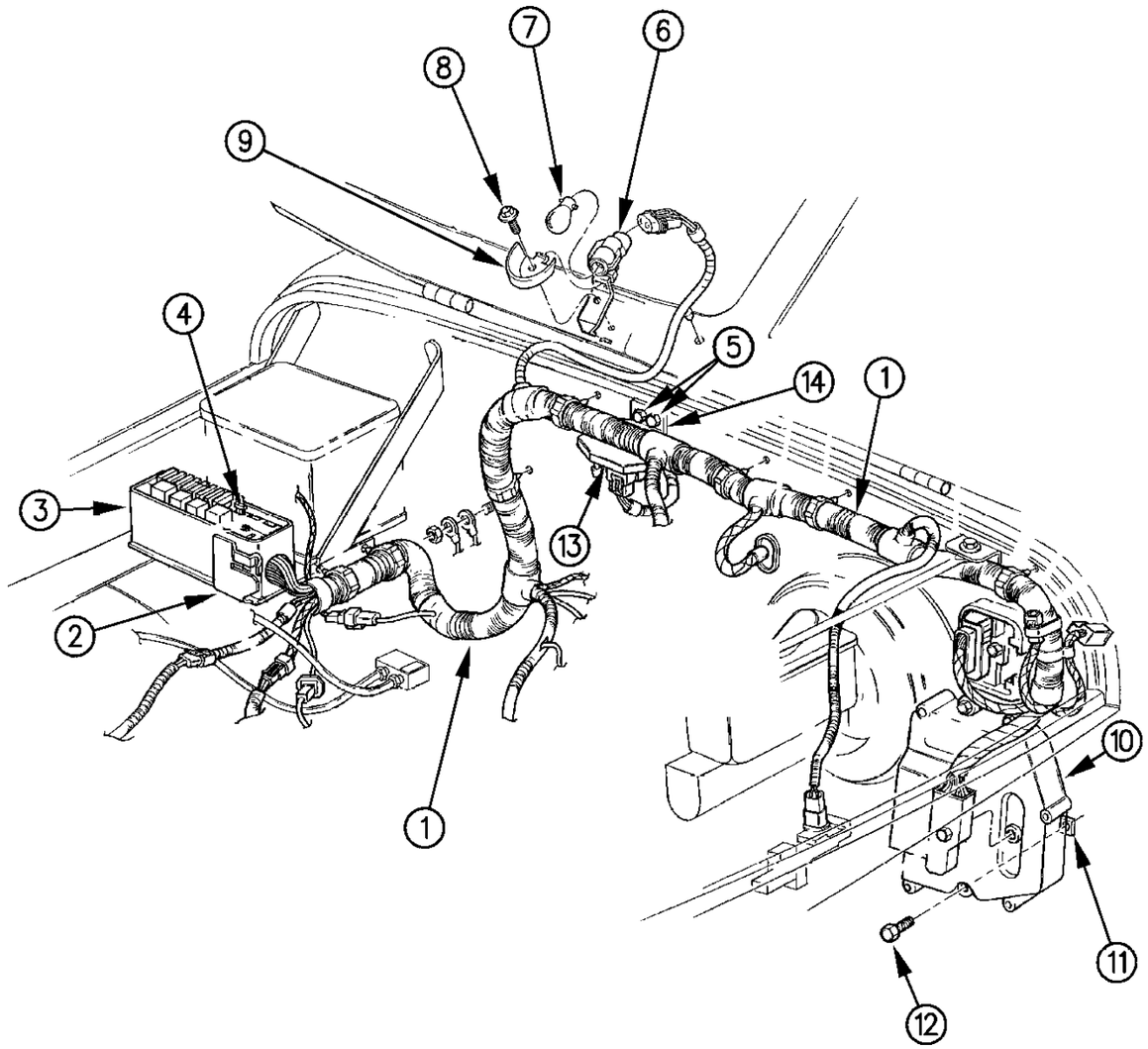

94J08 1305

ITEM	PART NUMBER	QTY	BODY	MODEL	DESCRIPTION
1					WIRING, Headlamp to Dash
					1994
	5601 8232				2.5L Engine
	5601 8231				4.0L Engine w/o ABS
	5601 8230				4.0L Engine w/ABS
	5601 8233		Y1		4.0L Engine (100 AMP. Alternator w/24 Volt System
					1995
	5601 0476				2.5L Engine
	5601 0475				4.0L Engine w/o ABS
	5601 0474				4.0L Engine w/ABS
2	5534 4768				BRACKET, Power Distribution Center
3	4527 115				HOUSING, Power Distribution Center
-	5601 7145				COVER, Upper
-	5600 5871				COVER, Lower
-	4527 116				COVER, Feed Terminal
4					FUSE, I.O.D.
5	J400 1042				SCREW, M.A.P. Sensor
6	4741 498				LAMP, Underhood
7	9428 606				BULB
8	J400 1042				SCREW
9					SHIELD, (Serv. w/Lamp Assy.)
10					SINGLE BOARD ENGINE CONTROLER, (Illus. 705) ***
11	J400 4959				NUT, Snap
12					SCREW, (Not Serv.)
13	3300 0153				SENSOR, M.A.P.
14	5602 7080				BRACKET, M.A.P. Sensor

MODEL CODES:

72=2 DR Wagon
74=4 DR Wagon
77=Open Body 93" Whlbase
78=Open Body 103" Whlbase - Export
T=2WD
J,N=4WD
U=4WD (RHD)

BODY STYLES:

YJ=Wrangler (4X4) "S"
Weangler (4X4) SE
Wrangler (4X4) Sahara
Wrangler (4X4) Renegade
XJ=Cherokee SE
Cherokee Sport
Cherokee Country
ZJ=Grand Cherokee SE
Grand Cherokee Laredo
Grand Cherolee Limited
ZG=Grand Cherokee European
Y1=Wrangler
X1=Cherokee
Z1=Grand Cherokee
KDX=Vehicles

AR = Use as Required - = Non Illustrated Part P.A.R. = Paint as Required

WIRING--HEADLAMP TO DASH CHEROKEE
Figure 8-1310

8-1310

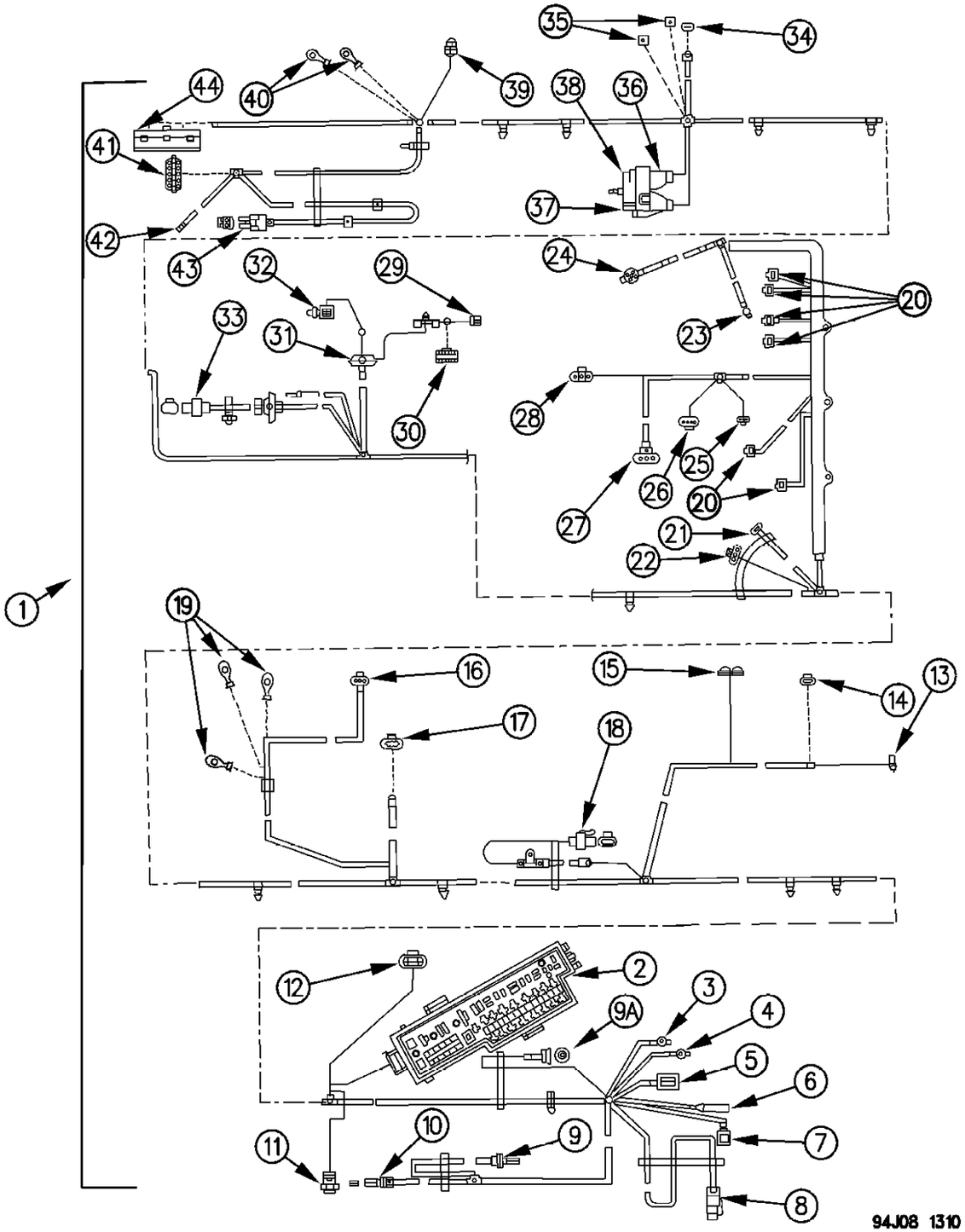

ITEM	PART NUMBER	QTY	BODY	MODEL	DESCRIPTION
1					WIRING, Headlamp To Dash
					Automatic Transmission (CANADA)
					w/ Halogen H/Lamp
	5600 9467				2.5L 1994
	5600 9544				2.5L 1995
	5601 9442				2.5L 1996
	5600 9473				4.0L 1994
	5600 9551				4.0L 1995
	5601 9448				4.0L 1996
	5600 9474				4.0L 1994 w/ABS
	5600 9552				4.0L 1995 w/ABS
	5601 9449				4.0L 1996 w/ABS
					Manual Transmission (CANADA)
	5600 9468				2.5L 1994
	5600 9545				2.5L 1995
	5601 9443				2.5L 1996
	5503 7383				4.0L 1994
	5600 9556				4.0L 1995
	5601 9454				4.0L 1996
					w/o Halogen H/Lamp & Daytime Running Lights
					Automatic Transmission
	5600 9466				2.5L 1994
	5600 9543				2.5L 1995
	5601 9441				2.5L 1996
	5600 9475				4.0L 1994
	5600 9549				4.0L 1995
	5601 9449				4.0L 1996
	5600 9472				4.0L 1994 w/ABS
	5600 9550				4.0L 1995 w/ABS
	5601 9447				4.0L 1996 w/ABS
					Manual Transmission
	5600 9469				2.5L 1994
	5600 9546				2.5L 1995
	5601 9444				2.5L 1996
	5503 7385				4.0L 1994
	5503 7386				4.0L 1994 w/HLD
	5600 9558				4.0L 1995
	5601 9457				4.0L 1996 Export
	5600 9582				4.0L Domestic ***
	5600 9559				4.0L 1995 w/HLD
	5601 9458				4.0L 1996 w/HLD
	5503 7382				4.0L 1994 w/ABS

MODEL CODES:

72=2 DR Wagon
74=4 DR Wagon
77=Open Body 93" Whlbase
78=Open Body 103" Whlbase - Export
T=2WD
J,N=4WD
U=4WD (RHD)

BODY STYLES:

YJ=Wrangler (4X4) "S"
Weangler (4X4) SE
Wrangler (4X4) Sahara
Wrangler (4X4) Renegade
XJ=Cherokee SE
Cherokee Sport
Cherokee Country
ZJ=Grand Cherokee SE
Grand Cherokee Laredo
Grand Cherolee Limited
ZG=Grand Cherokee European
Y1=Wrangler
X1=Cherokee
Z1=Grand Cherokee
KDX=Vehicles

AR = Use as Required - = Non Illustrated Part P.A.R. = Paint as Required

WIRING--HEADLAMP TO DASH CHEROKEE
Figure 8-1310

8-1310

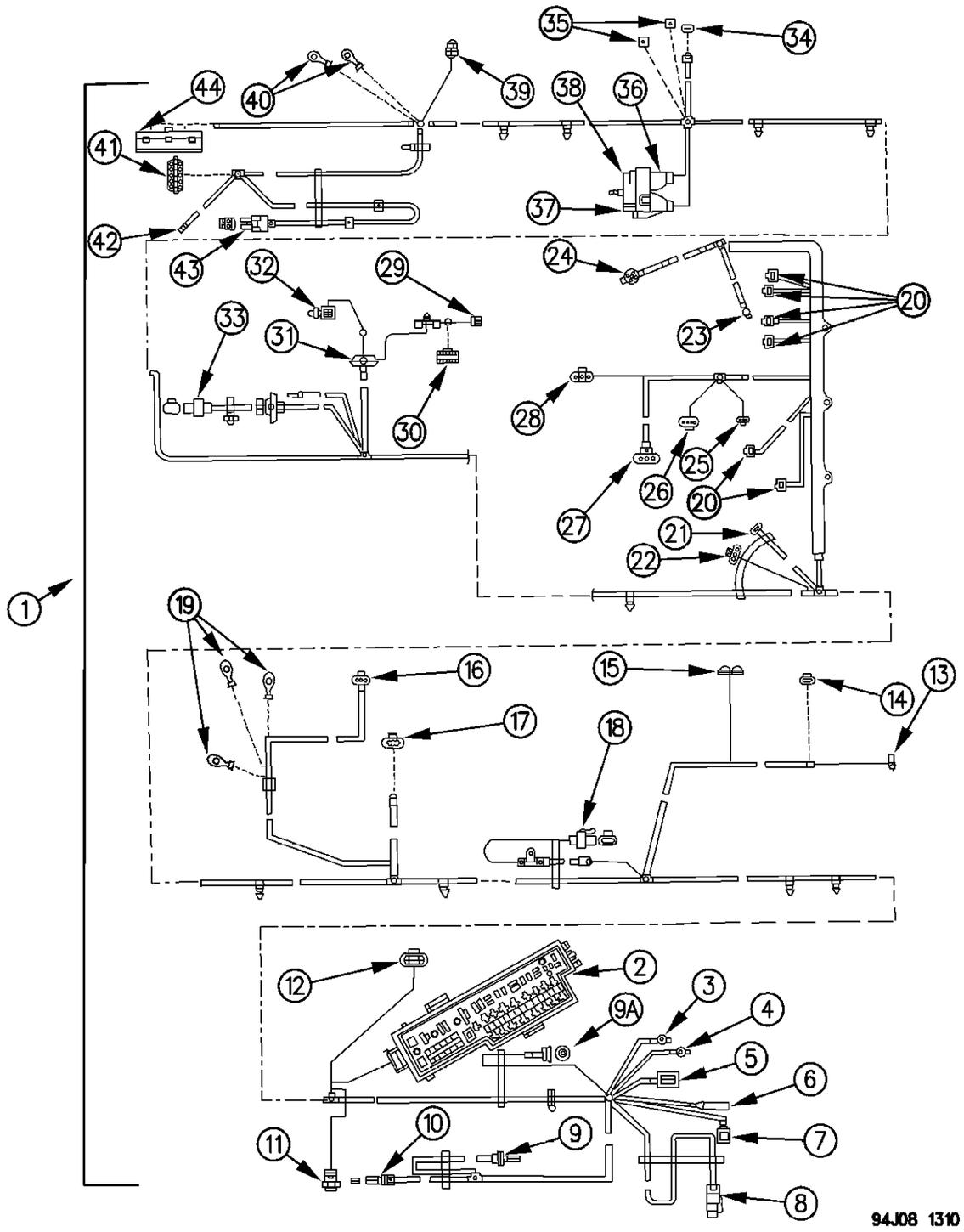

ITEM	PART NUMBER	QTY	BODY	MODEL	DESCRIPTION
	5600 9555				4.0L 1995 w/ABS
	5601 9453				4.0L 1996 w/ABS
NOTES: HDL = H/Lamp Leveling Device.					
					Diesel
	5600 9541				1995 w/ABS
	5600 9201				1996 w/ABS
	5600 9542				1995 w/o ABS
	5600 9202				1996 w/o ABS
					Export
					Automatic Transmission
	5503 7381				4.0L 1994 w/ABS
	5600 9554				4.0L 1995 w/ABS
	5601 9452				4.0L 1996 w/ABS
					Manual Transmission
	5600 9470				2.5L 1994
	5600 9547				2.5L 1995
	5601 9445				2.5L 1996
	5503 7387				4.0L 1994
	5600 9560				4.0L 1995
					RHD
	5600 9540				2.5L 1995
	5601 9459				2.5L 1996
	5503 7390				4.0L 1994
	5600 9538				4.0L 1995
	5601 9460				4.0L 1996 (AUTO.)
	5601 8797				4.0L 1996 (MANUAL)
	5503 7391				4.0L 1994 w/ABS
	5600 9539				4.0L 1995 w/ABS
	5601 9463				4.0L 1996 w/ABS
					RHD (Diesel)
	5601 8028				2.1L (Turbo)1994
	5601 9060				2.1L & 2.5L 1994
	5601 8515				4 CYL. 1995
	5600 9204				4 Cyl. 1996
	5601 9297				4 Cyl. 1995w/ABS
	5600 9203				4 Cyl. 1996w/ABS
					1996 California Emissions
-	5601 7142				BRACKET, Power Distribution Center 1993-1995
	5600 8885				1996 ***
2	4527 115	1			POWER DISTRIBUTION CENTER ***
-	5601 8922	1			BAR ASSEMBLY, BUS (1996) ***
					HOUSING

MODEL CODES:

72=2 DR Wagon
74=4 DR Wagon
77=Open Body 93" Whlbase
78=Open Body 103" Whlbase - Export
T=2WD
J,N=4WD
U=4WD (RHD)

BODY STYLES:

YJ=Wrangler (4X4) "S"
Weangler (4X4) SE
Wrangler (4X4) Sahara
Wrangler (4X4) Renegade
XJ=Cherokee SE
Cherokee Sport
Cherokee Country
ZJ=Grand Cherokee SE
Grand Cherokee Laredo
Grand Cherolee Limited
ZG=Grand Cherokee European
Y1=Wrangler
X1=Cherokee
Z1=Grand Cherokee
KDX=Vehicles

AR = Use as Required - = Non Illustrated Part P.A.R. = Paint as Required

WIRING--HEADLAMP TO DASH CHEROKEE
Figure 8-1310

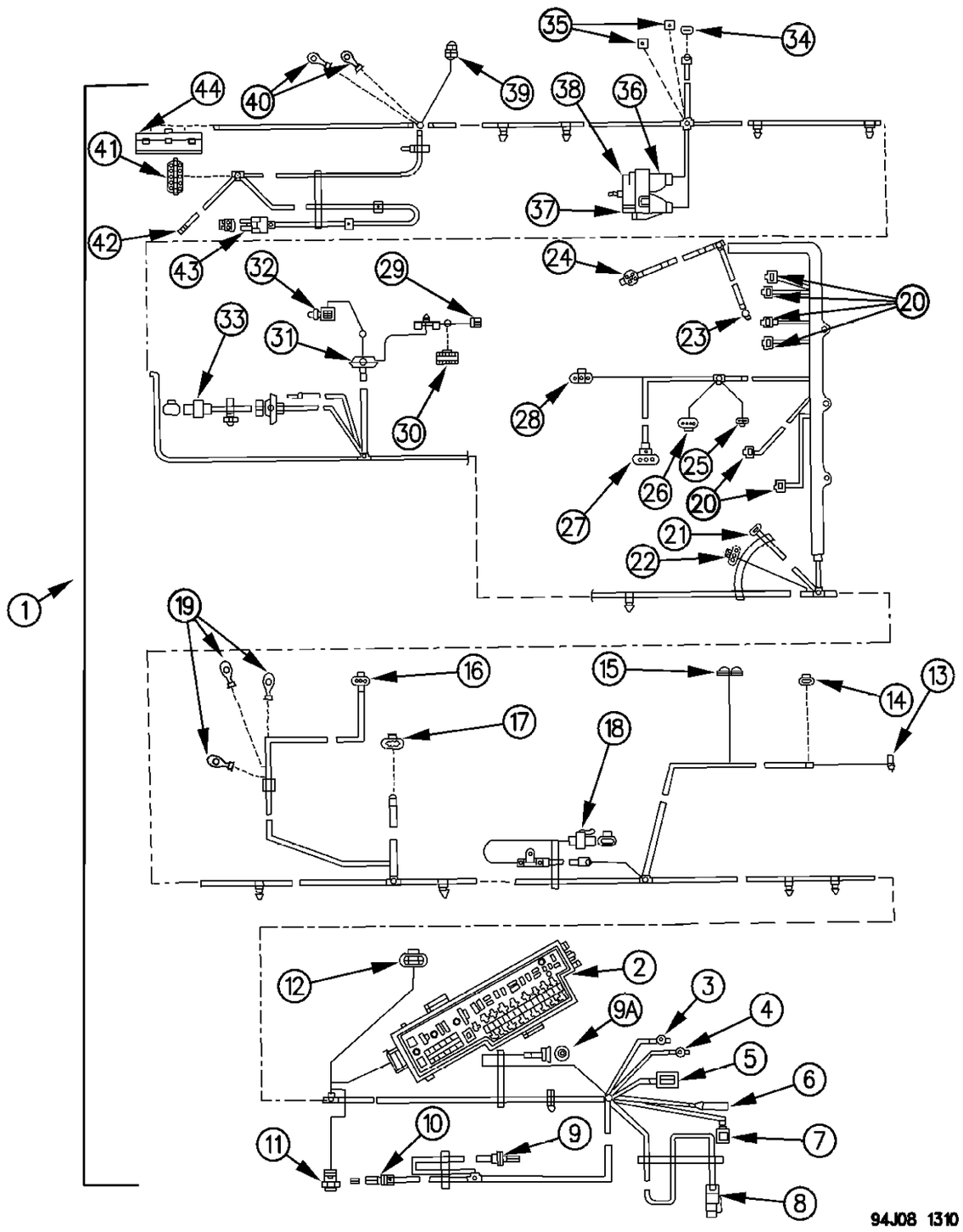

ITEM	PART NUMBER	QTY	BODY	MODEL	DESCRIPTION
-		1			COVER, PDC Upper
	5600 8767				1994-95
	5600 9420				1996
-	5601 7885				COVER, Upper, 2.5 Eng.
	5600 9420				1996 all engines ***
-	5600 5871	1			COVER, Lower
-	4527 116				COVER, Feed Terminal
-	4638 094				RELAY, Fuel, A.S.D.
-					FUSE
	6101 679	AR			20 Amp. Yellow
	6101 640	AR			30 Amp. Green
	6101 641	AR			40 Amp. Amber
	6101 642	AR			50 Amp. Red
	6101 643	AR			60 Amp. Blue
	6101 645	AR			80 Amp. Natural
	3600 1676				DIODE, Anti Lock brakes
3					INSULATOR, Battery Cable (Serv. Assy.)
4	4443 964				INSULATOR, Ambient Temp.
5	4504 268				INSULATOR, To Eng. Wiring
6					INSULATOR, Alternator Output (Serv. Assy.)
7	4364 375				INSULATOR, Relay
8	4504 251				INSULATOR, Speed Control Servo
9					INSULATOR, Hood Jam Switch (Serv. Assy.)
9A					A/C Pressure Switch (Serviced in Wiring Harness) ***
10					INSULATOR, Horn Rt. (Serv. Assy.)
11					INSULATOR, Blower Motor (Serv. Assy.)
12	4504 267				INSULATOR, DRL
13	2298 882				INSULATOR, Washer, Rear
14					INSULATOR, Front Washer Bottle (Serv. Assy.)
15	1704 562				INSULATOR, Washer Fluid Level
16					INSULATOR, SYNC (Serv. Assy.)
17					INSULATOR, Trans. Harness (Serv. Assy.)
18	4400 242				INSULATOR, Underhood Lamp
19					INSULATOR, (Serv. Assy.)
20	4713 001				INSULATOR, Injector w/Boot
21	5600 6431				INSULATOR, Temp. Sender
22					INSULATOR, Map Sensor (Serv. Assy.)
23	4331 569				INSULATOR, Coolant Temp. Sensor
24	4439 077				INSULATOR, Oxygen Sensor
25	4414 902				INSULATOR, Air Temp. Sensor
26	4414 900				INSULATOR, AIS Motor
27					INSULATOR, Crank Position Sensor (Serv. Assy.)

MODEL CODES:

72=2 DR Wagon
74=4 DR Wagon
77=Open Body 93" Whlbase
78=Open Body 103" Whlbase - Export
T=2WD
J,N=4WD
U=4WD (RHD)

BODY STYLES:

YJ=Wrangler (4X4) "S"
Weangler (4X4) SE
Wrangler (4X4) Sahara
Wrangler (4X4) Renegade
XJ=Cherokee SE
Cherokee Sport
Cherokee Country
ZJ=Grand Cherokee SE
Grand Cherokee Laredo
Grand Cherolee Limited
ZG=Grand Cherokee European
Y1=Wrangler
X1=Cherokee
Z1=Grand Cherokee
KDX=Vehicles

AR = Use as Required - = Non Illustrated Part P.A.R. = Paint as Required

WIRING--HEADLAMP TO DASH CHEROKEE
Figure 8-1310

8-1310

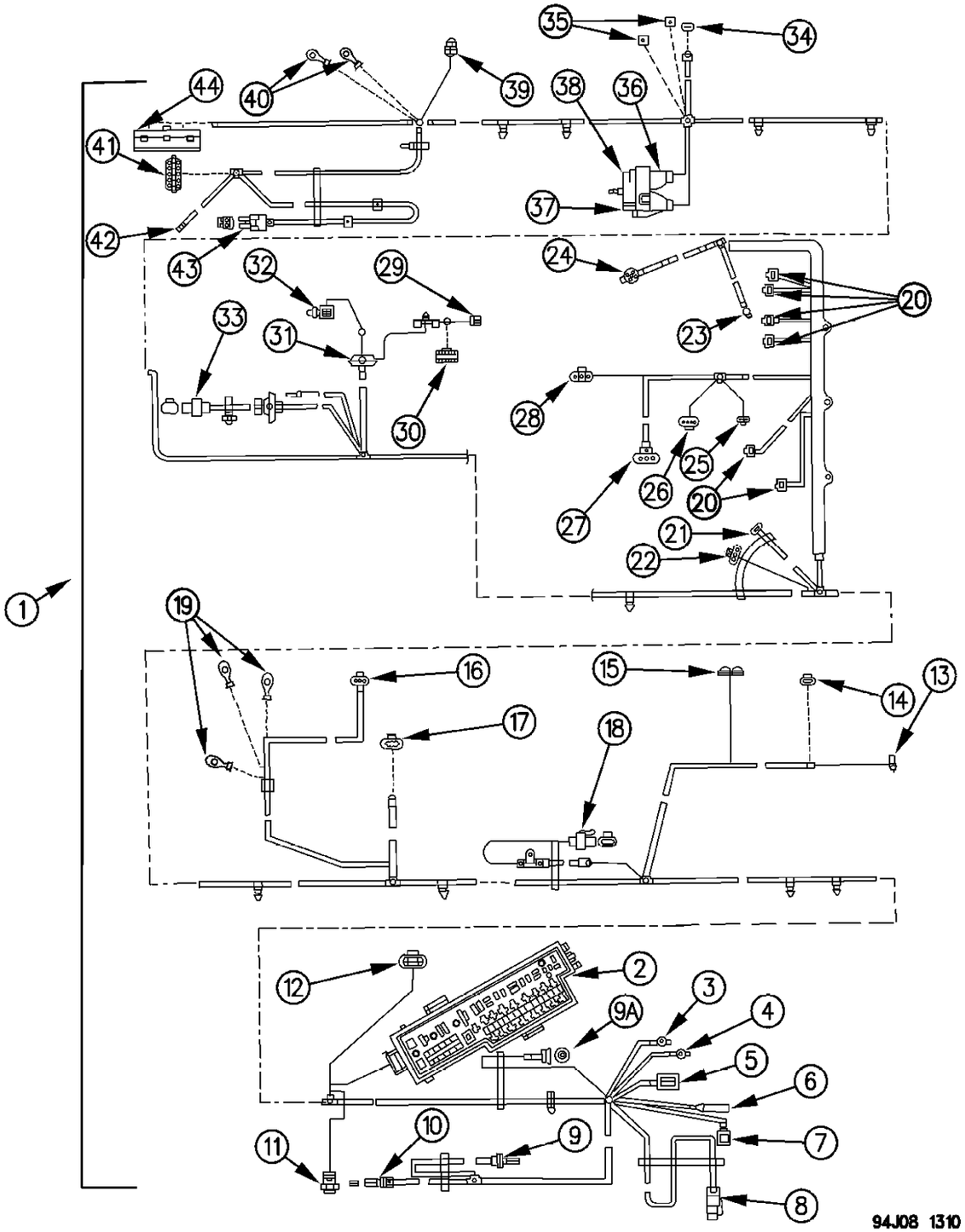

ITEM	PART NUMBER	QTY	BODY	MODEL	DESCRIPTION
28					INSULATOR, Throttle Position Sensor (Serv. Assy.)
29					INSULATOR, Speed Control Switch (Serv. Assy.)
30					INSULATOR, To Inst. Panel Wiring (Serv. Assy.)
31					GROMMET, (Serv. Assy.)
32	4274 926				INSULATOR, Diagnostic
33					INSULATOR, Wiper Motor (Serv. Assy.)
34					INSULATOR, Brake Pressure Switch (Serv. Assy.)
35					INSULATOR, Ballast Resistor (Serv. Assy.)
36	3417 5326				COVER, Bulkhead
37	3417 5325				COVER, Bulkhead
38	3417 8230				INSULATOR, Bulkhead
39	4274 909				INSULATOR, S.B.E.C. Diagnostic
40					INSULATOR, Body Ground (Serv. Assy.)
41					INSULATOR, Front End Wiring (Serv. Assy.)
42					INSULATOR, Horn Lt. (Serv. Assy.)
43	4400 809				INSULATOR, Fan
44	4419 492				INSULATOR, S.B.E.C.

MODEL CODES:

72=2 DR Wagon
74=4 DR Wagon
77=Open Body 93" Whlbase
78=Open Body 103" Whlbase - Export
T=2WD
J,N=4WD
U=4WD (RHD)

BODY STYLES:

YJ=Wrangler (4X4) "S"
Weangler (4X4) SE
Wrangler (4X4) Sahara
Wrangler (4X4) Renegade

XJ=Cherokee SE
Cherokee Sport
Cherokee Country

ZJ=Grand Cherokee SE
Grand Cherokee Laredo
Grand Cherolee Limited
ZG=Grand Cherokee European

Y1=Wrangler
X1=Cherokee
Z1=Grand Cherokee
KDX=Vehicles

AR = Use as Required - = Non Illustrated Part P.A.R. = Paint as Required

WIRING--HEADLAMP TO DASH GRAND CHEROKEE
Figure 8-1315

8-1315

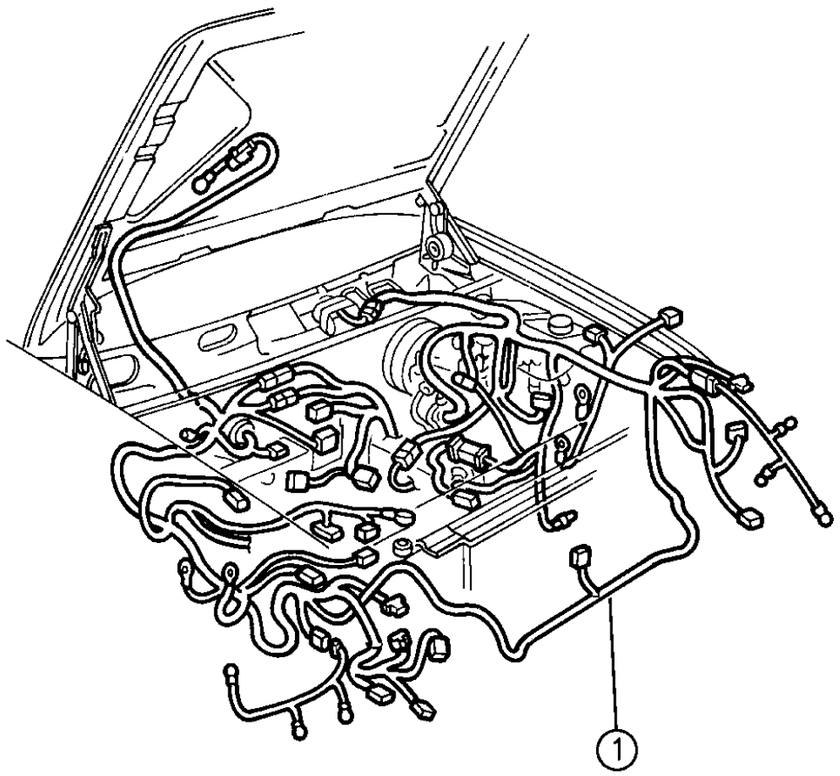

94J8 1315

ITEM	PART NUMBER	QTY	BODY	MODEL	DESCRIPTION
1		1			WIRING ASSEMBLY, Headlamp & Dash ***
			ZJ,ZG		1994-95 (Serviced in Engine Wiring Assembly)
	5604 2575		ZJ		1996 FEDERAL EMISSION with Air Conditioning
	5604 2576		ZJ		1996 CALIFORNIA EMISSION with Security Alarm
	5604 2400		ZJ		1996 CANADA
	5604 2401		ZJ		1996 w/Speed Proportional Steering
	5604 2577		ZG		1996 5.2L & 4.0L w/Export Equipment Package (LHD)
	5603 6887		ZG		1996 4.0L w/Export Equipment Package 4WD (RHD)
	5604 2792		ZG		1996 4 Cylinder Diesel (LHD)
	5603 6881		ZG		1996 4 Cylinder Diesel Engine (RHD)

MODEL CODES:

72=2 DR Wagon
74=4 DR Wagon
77=Open Body 93" Whlbase
78=Open Body 103" Whlbase - Export
T=2WD
J,N=4WD
U=4WD (RHD)

BODY STYLES:

YJ=Wrangler (4X4) "S"
Weangler (4X4) SE
Wrangler (4X4) Sahara
Wrangler (4X4) Renegade
XJ=Cherokee SE
Cherokee Sport
Cherokee Country
ZJ=Grand Cherokee SE
Grand Cherokee Laredo
Grand Cherolee Limited
ZG=Grand Cherokee European
Y1=Wrangler
X1=Cherokee
Z1=Grand Cherokee
KDX=Vehicles

AR = Use as Required - = Non Illustrated Part P.A.R. = Paint as Required

WIRING--INSTRUMENT PANEL WRANGLER
Figure 8-1405

8-1405A

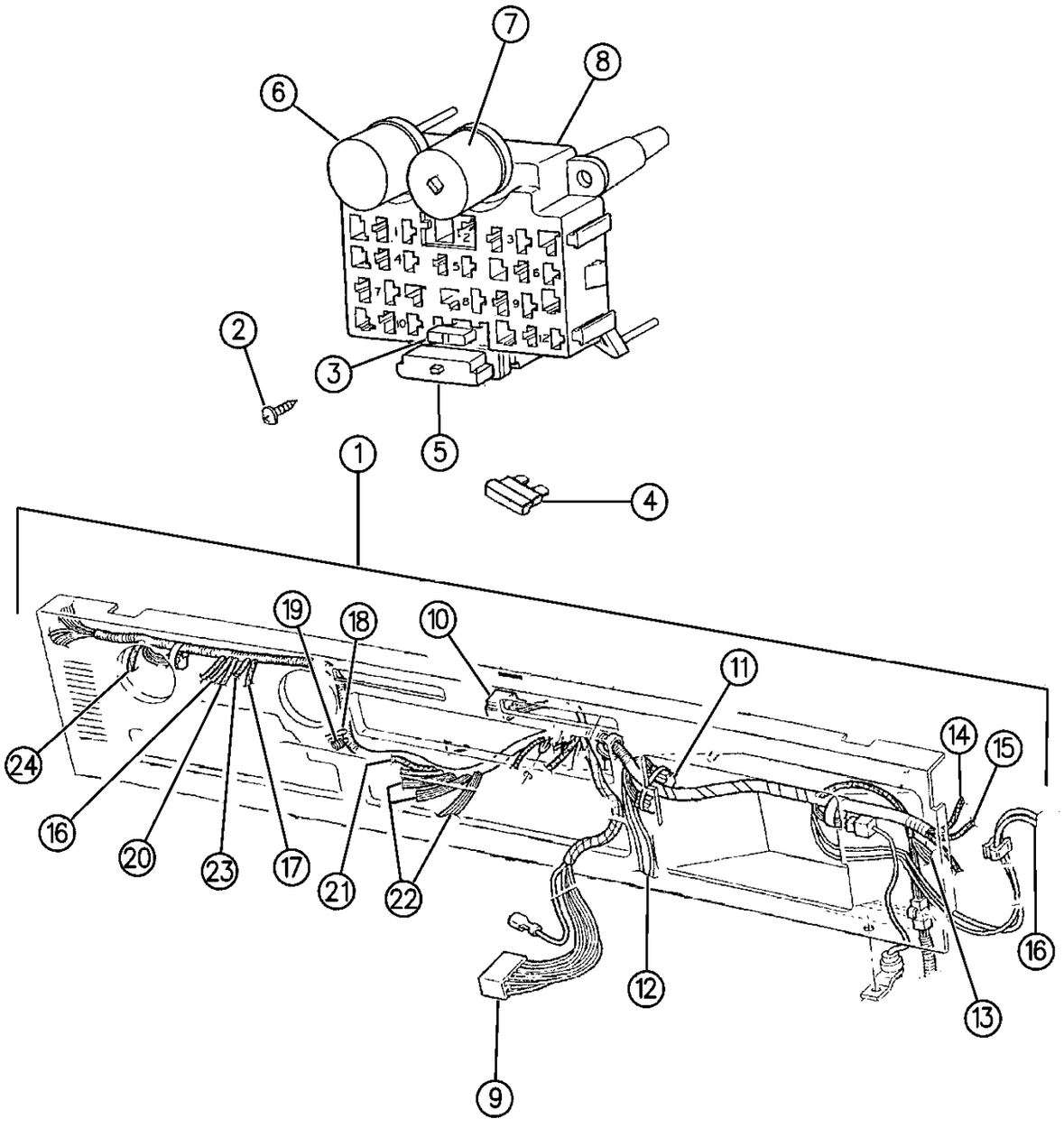

94J08 1405A

ITEM	PART NUMBER	QTY	BODY	MODEL	DESCRIPTION
1	5601 8170	1			WIRING, INSTRUMENT PANEL, w/ or w/o Road Lamps
	5601 8169				EUROPE
2	3420 1598	2			SCREW
3	5600 3116	1			BREAKER, Circuit, 5.3 Amp.
4	J323 1213	AR			FUSE, 5 Amp
	J323 1216	AR			15 Amp.
	J323 1217	AR			20 Amp.
	J323 1218	AR			25 Amp.
	6101 679				20-Amp., Maxi
	6101 640				30-Amp., Maxi
	6101 641				40-Amp., Maxi
	6101 642				50-Amp., Maxi
	6101 643				60-Amp., Maxi
	6101 645				80-Amp., Maxi
	6101 481				2-Amp.
	6101 133				5-Amp., Tan
	6101 135				10-Amp., Red
	6101 136				15-Amp., Blue
	6101 137				20-Amp., Yellow
	6101 138				25-Amp., Natural
-	6101 139				30-Amp., Green
5	5600 1077	1			BUZZER, Headlamp/Seat Belt
6	2932 877	1			FLASHER, Hazzard ***
	5600 7098				EUROPE
7	3837 161	1			FLASHER, Turn Signal ***
8	5600 2844	1			FUSEBLOCK ***
-					INSULATOR, To Fog Lamp Switch (Not Serv.)
-					INSULATOR, To Inst. Panel (Not Serv.)
-					INSULATOR, To Blower Switch (Not Serv.)
-					INSUILATOR, To Cigar Lighter (Not Serv.) ***
-					INSULATOR, To Limit Switch (Not Serv.)
-					INSULATOR, HEVAC Illum. Lamp (Not Serv)
-					INSULATOR, To Heater Limit Switch (Not Serv.)
9	8350 6510				INSULATOR, To Radio
10	4368 480				INSULATOR, To Gauge Pack
11					INSULAOR, Radio Illum. Relay (Not Serv.) ***
12					INSULATOR, Park Lamps/High Beam (Not Serv.)
-					INSULATOR, To Rear Speakers (Not Serv.)
13					INSULATOR, Rt. Frt. Speaker (Not Serv.)
14					INSULATOR, Blower Connection (Not Serv.)
15					INSULATOR, Blower Resistor (Not Serv.)
16					INSULATOR, To Right Courtesy Lamp (Not Serv.)

MODEL CODES:

72=2 DR Wagon
74=4 DR Wagon
77=Open Body 93" Whlbase
78=Open Body 103" Whlbase - Export
T=2WD
J,N=4WD
U=4WD (RHD)

BODY STYLES:

YJ=Wrangler (4X4) "S"
Weangler (4X4) SE
Wrangler (4X4) Sahara
Wrangler (4X4) Renegade
XJ=Cherokee SE
Cherokee Sport
Cherokee Country
ZJ=Grand Cherokee SE
Grand Cherokee Laredo
Grand Cherolee Limited
ZG=Grand Cherokee European
Y1=Wrangler
X1=Cherokee
Z1=Grand Cherokee
KDX=Vehicles

AR = Use as Required - = Non Illustrated Part P.A.R. = Paint as Required

WIRING--INSTRUMENT PANEL WRANGLER
Figure 8-1405

8-1405A

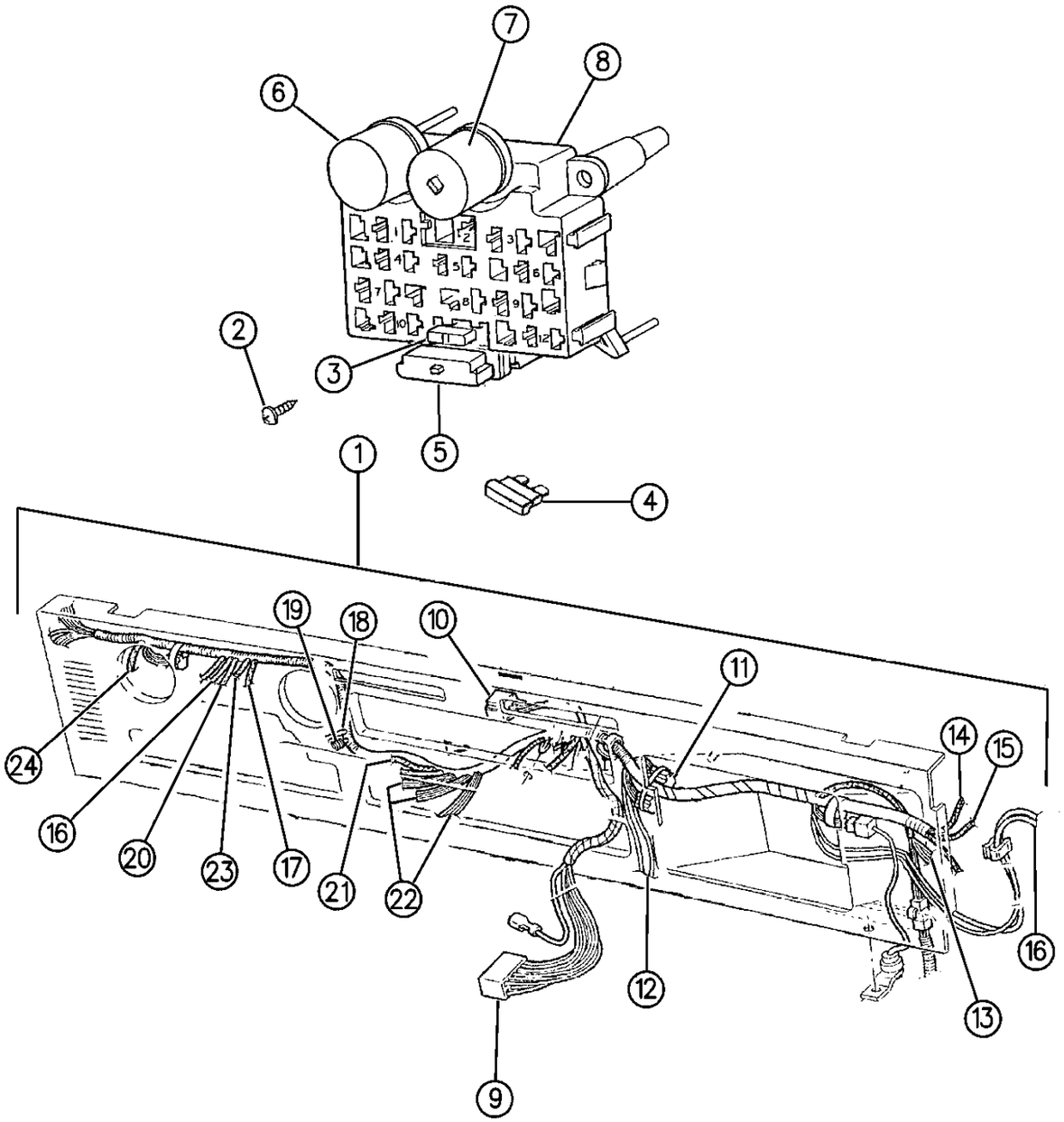

ITEM	PART NUMBER	QTY	BODY	MODEL	DESCRIPTION
17					INSULATOR, To Wiper Switch (Not Serv.)
18					INSULATOR, To A/C (Not Serv.)
19	4374 704				INSULATOR, ACC. Illum.
20					INSULATOR, To Panel Lamp Dimmer Switch (Not Serv.)
-					INSULATOR, Ign. Switch, 3-Way (Not Serv.
21	J417 7870				INSULATOR, To Ign. Switch, 4-Way
22	4209 712				INSULATOR, Brake Switch
-					INSULATOR, Brake Switch, (Not Serv.)
-					INSULATOR, To Turn Signal Switch (Not Serv.)
-					INSULATOR, Rear Wiper Switch (Not Serv.)
-					INSULATOR, To Heated Backlite Switch (Not Serv.)
-					INSULATOR, To Fog Lamp Switch (Not Serv.)
23					INSULATOR, To Headlamp Switch (Not Serv.)
-					INSULATOR, To Headlamp Dimmer Switch (Not Serv.)
-	4368 475				INSULATOR, To Cluster
-					INSULATOR, Left Speaker, (Not Serv.)
-					INSULATOR, To Lt. Courtesy Lamp
24	4527 253				INSULATOR, To Body Wiring, #1
-	4527 252				INSULATOR, To Body Wiring, #2
-					INSULATOR, Speed Warning, (Not Serv.)
-	3417 8240				INSULATOR, Dash Connector (Bulkhead)

MODEL CODES:

72=2 DR Wagon
74=4 DR Wagon
77=Open Body 93" Whlbase
78=Open Body 103" Whlbase - Export
T=2WD
J,N=4WD
U=4WD (RHD)

BODY STYLES:

YJ=Wrangler (4X4) "S"
Weangler (4X4) SE
Wrangler (4X4) Sahara
Wrangler (4X4) Renegade
XJ=Cherokee SE
Cherokee Sport
Cherokee Country
ZJ=Grand Cherokee SE
Grand Cherokee Laredo
Grand Cherolee Limited
ZG=Grand Cherokee European
Y1=Wrangler
X1=Cherokee
Z1=Grand Cherokee
KDX=Vehicles

AR = Use as Required - = Non Illustrated Part P.A.R. = Paint as Required

WIRING--INSTRUMENT PANEL CHEROKEE
Figure 8-1410

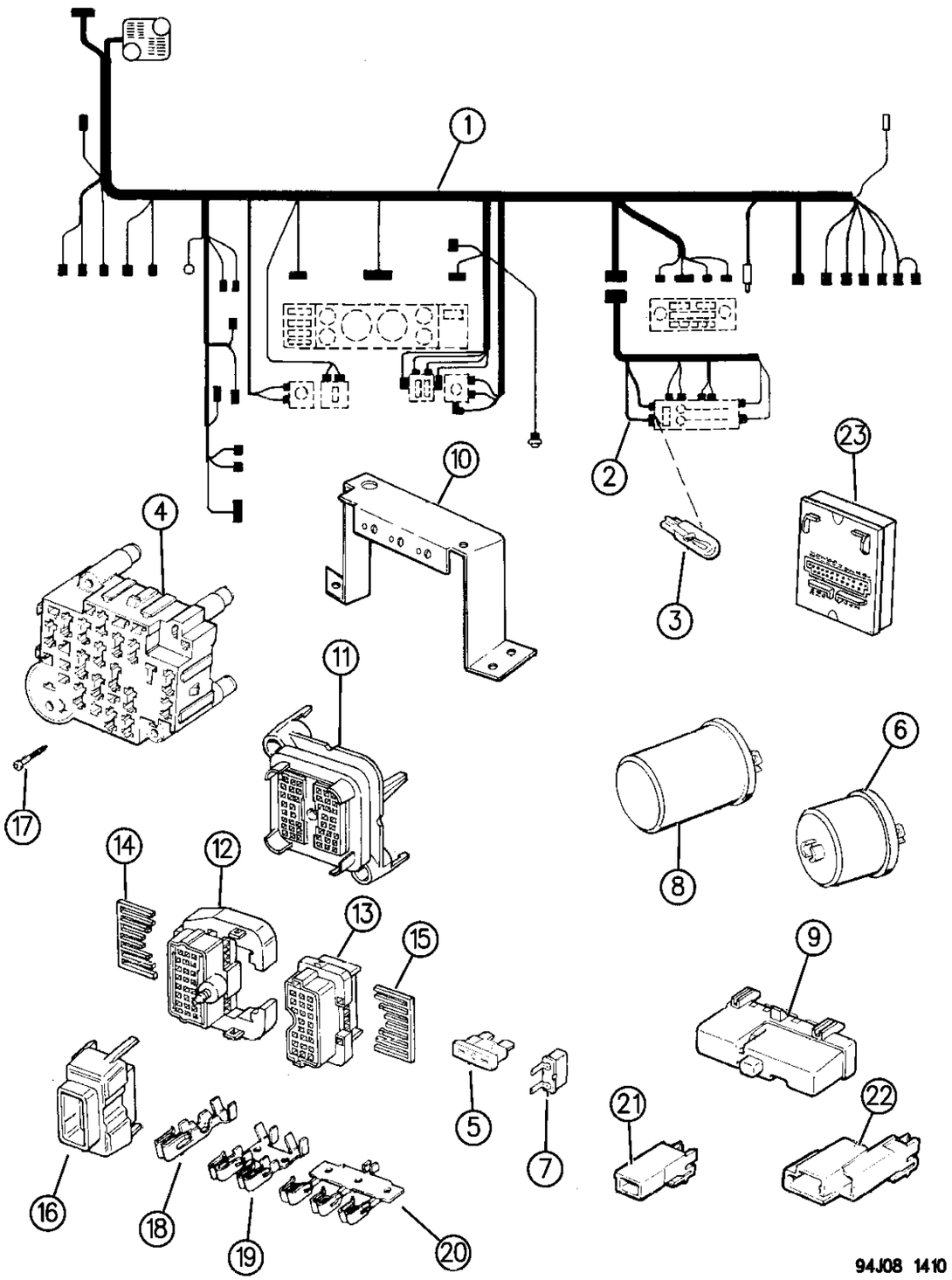

ITEM	PART NUMBER	QTY	BODY	MODEL	DESCRIPTION
1					WIRING, Inst. Panel
	5601 9094	1	XJX1		1994
	5601 9328	1	XJX1		1995
	5601 0062	1	XJX1		1996
	5601 9097		XJX1		Police Package 1994
	5601 0063		XJ		Police Package 1996 ***
	5601 0063		XJ		Police Package 1996 ***
	5601 9095		XJX1		w/Security Alarm, Venezuela
	5601 9096	1	XJX1		Venezuela
	5601 9195	1	XJX1		RHD, U.S.A.
	5601 9301	1	XJX1		RHD, KDX, EXPORT
	5601 9541	1	XJX1		1994 RHD w/ABS, USA
	5601 8570		X1		1994 w/Rear Wiper KDX
	5601 8654		XI		1994 w/o Rear wiper KDX
	5600 9629				1995 RHD w/Postal Package/Rual
	5600 9364		XJX1		1995 EUROPE LHD (All Gas & Diesel Engine)
	5601 8516		XJX1		1995 w/Diesel Engine RHD
	5601 0030		XJX1		1996 w/Diesel Engine RHD
-	J417 5376	AR	XJX1		TIE, Wiring Mount (Attached Harness to Firewall)
2					WIRING, (Not Used)
3	9433 184	2			BULB, (74)
4	5601 7680	1			FUSE BLOCK
5	3600 1416	AR			FUSE, 2 Amp.
	J323 1213	AR			5 Amp.
	J323 1214	AR			7.5 Amp.
	J323 1215	AR			10 Amp.
	J323 1216	AR			15 Amp.
	J323 1217	AR			20 Amp.
	J323 1218	AR			25 Amp.
	4687 835				25-Amp. Mini (Natural)
	6101 679				20-Amp., Maxi
	6101 640				30-Amp., Maxi
	6101 489				30 Amp/32 Volt (Mini Blade) Green
	6101 641				40-Amp., Maxi
	6101 642				50-Amp., Maxi
	6101 643				60-Amp., Maxi
	6101 645				80-Amp., Maxi
	6101 137				20-Amp., Yellow
	6101 139				30-Amp., Light Green
6	2932 877				FLASHER, Hazard ***
7	5600 1110				CIRCUIT BREAKER, 4.8 Amp. ***
	5600 6966	AR			30 Amp.

MODEL CODES:

72=2 DR Wagon
74=4 DR Wagon
77=Open Body 93" Whlbase
78=Open Body 103" Whlbase - Export
T=2WD
J,N=4WD
U=4WD (RHD)

BODY STYLES:

YJ=Wrangler (4X4) "S"
Weangler (4X4) SE
Wrangler (4X4) Sahara
Wrangler (4X4) Renegade
XJ=Cherokee SE
Cherokee Sport
Cherokee Country
ZJ=Grand Cherokee SE
Grand Cherokee Laredo
Grand Cherolee Limited
ZG=Grand Cherokee European
Y1=Wrangler
X1=Cherokee
Z1=Grand Cherokee
KDX=Vehicles

AR = Use as Required - = Non Illustrated Part P.A.R. = Paint as Required

WIRING--INSTRUMENT PANEL CHEROKEE
Figure 8-1410

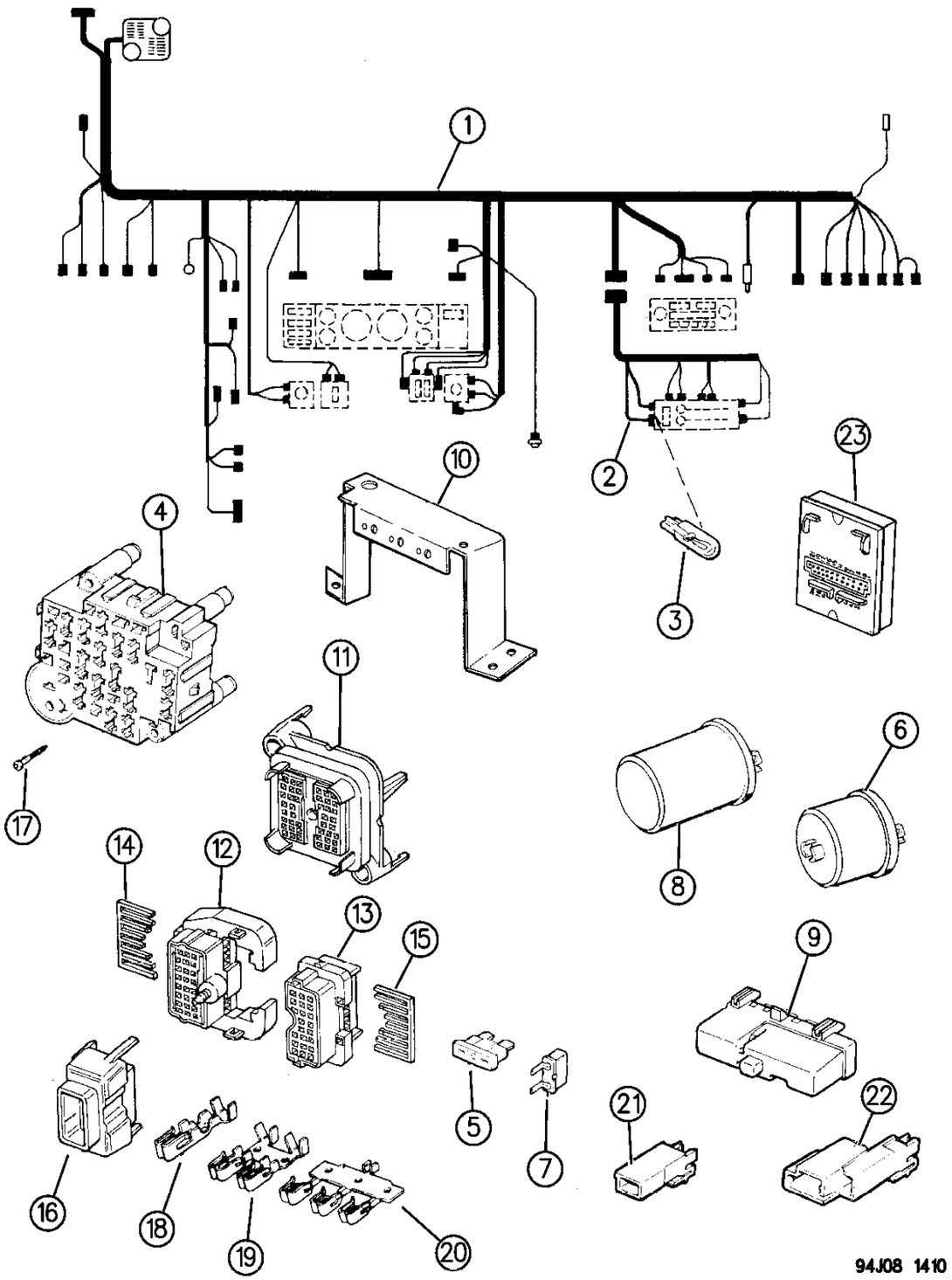

ITEM	PART NUMBER	QTY	BODY	MODEL	DESCRIPTION
8	5600 7348				FLASHER, Turn Signal, Standard 2 Lamp ***
	3837 162	1			Heavy Duty (323) 3 Lamp
	5600 0903	1			(550) 3 Bladed
9	5600 1076				BUZZER, Warning, Blue
	5600 1077	1			Black
10		1			BRACKET, Fuseblock Mtg.
	5601 7135				Gas Engine
	5600 4850				Diesel
11	3417 8240	1			CONNECTOR, Bulkhead
12	3417 8230	1			CONNECTOR, Bulkhead
13	3417 8231	1			CONNECTOR, Bulkhead
14	3417 5323	1			RETAINER, Blue
15	3417 5324	1			RETAINER, Clear
16					COVER
17	3420 1598	2			SCREW
18	J323 1223	5			TERMINAL
19	J323 1224	3			TERMINAL
20	J323 1225	1			TERMINAL
21					CONNECTOR
22					CONNECTOR
23	5600 6947		X1		MODULE, Security Alarm, Venezuela (Illus. 405)
-	4450 205				INSULATOR, Rt. Frt. Door Switch Jumper
-					INSULATOR, Rt. Front (Not Serv.
-	4274 926				INSULATOR, To Overhead Console Wiring
-					INSULATOR, To Dome Lamp Wiring (Not Serv.)
-	4209 927				INSULATOR, To Rt. Courtesy Lamp
-					INSULATOR, A/C Thermostat (Not Serv.)
-					INSULATOR, To Glove Box Switch (Not Serv.)
-	J417 7870				INSULATOR, Ignition Switch, 3-Way
-					INSULATOR, Ignition Switch, 5-Way, (Not Serv.)
-					INSULATOR, To Turn Signal Switch (Not Serv.)
-					INSULATOR, To Eng. Wiring, (Not Serv.)
-					INSULATOR, To Dash Panel Wiring (Not Serv.)
-					INSULATOR, To Headlamp Dimmer Switch (Not Serv.)
-					INSULATOR, Brake Switch (Not Serv.)
-					INSULATOR, To Blower Resistor (Not Serv.)
-					INSULATOR, To A/C Lamp (Not Serv.)
-	5600 2952				CABLE, Antenna
-					INSULATOR, Mode Switch (Not Serv.)
-					INSULATOR, To Blower Switch (Not Serv.)
-					INSULATOR, Wiper Switch (Not Serv.)
-					INSULATOR, To Headlamp Delay Module (Not Serv.)

MODEL CODES:

72=2 DR Wagon
74=4 DR Wagon
77=Open Body 93" Whlbase
78=Open Body 103" Whlbase - Export
T=2WD
J,N=4WD
U=4WD (RHD)

BODY STYLES:

YJ=Wrangler (4X4) "S"
Weangler (4X4) SE
Wrangler (4X4) Sahara
Wrangler (4X4) Renegade
XJ=Cherokee SE
Cherokee Sport
Cherokee Country
ZJ=Grand Cherokee SE
Grand Cherokee Laredo
Grand Cherolee Limited
ZG=Grand Cherokee European
Y1=Wrangler
X1=Cherokee
Z1=Grand Cherokee
KDX=Vehicles

AR = Use as Required - = Non Illustrated Part P.A.R. = Paint as Required

WIRING--INSTRUMENT PANEL CHEROKEE
Figure 8-1410

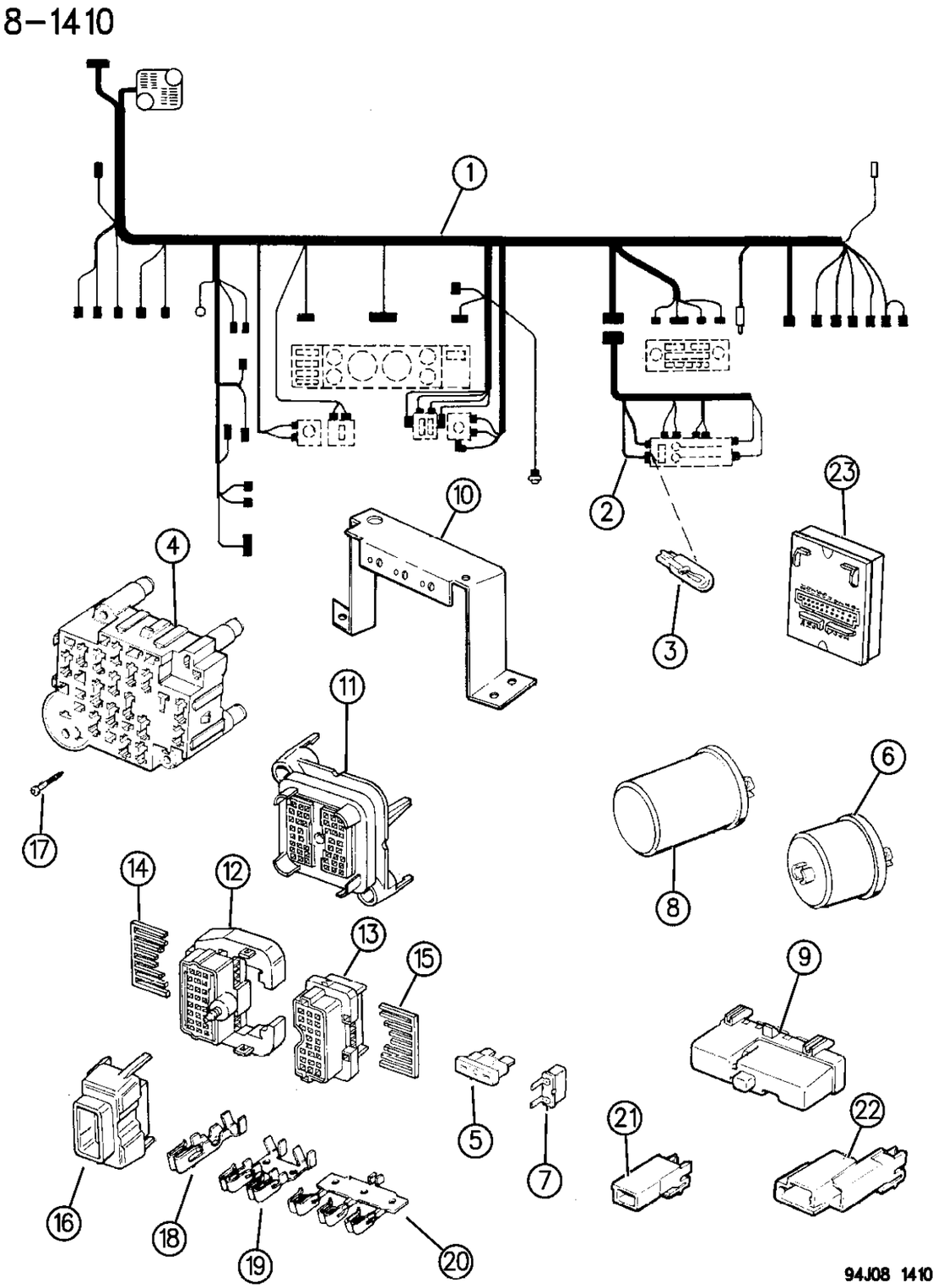

ITEM	PART NUMBER	QTY	BODY	MODEL	DESCRIPTION
-	8350 6510				INSULATOR, To Radio
-					INSULATOR, Rear Wiper Switch, (Not Serv.)
-					INSULATOR, To Cluster (Not Serv.)
-					INSULATOR, Ashtray Lamp (Not Serv.)
-					INSULATOR, Rear Wipe Illum. (Not Serv.)
-					INSULATOR, To Telltail (Not Serv.)
-					INSULATOR, Heated Backlight Illum. (Not Serv.)
-					INSULATOR, Fog Lamp Illum. (Not Serv.)
-					INSULATOR, Fog Lamp Switch (Not Serv.)
-					INSULATOR, Headted Backlight Switch, (Not Serv.)
-	4432 542				INSULATOR, Headlamp Switch
-	4209 927				INSULATOR, To Lt. Courtesy Lamp Wiring
-					INSULATOR, To Lt. Door Jumper (Not Serv.)
-					RELAY BLOCK, (Not Serv.) ***
-	4527 253				INSULATOR, To Body Wiring 16-Way, Gray
-	4527 252				INSULATOR, To Body Wiring 16-Way
-					INSULATOR, To Left Door Speaker Wiring, (Not Serv.)
-	3417 8240				BULKHEAD INSULATOR ***
-	4432 542	AR			INSULATOR, I/Panel Wiring
	4432 543	AR			WEDGE, I/Panel Wiring (Use w/4432542)

MODEL CODES:

72=2 DR Wagon
74=4 DR Wagon
77=Open Body 93" Whlbase
78=Open Body 103" Whlbase - Export
T=2WD
J,N=4WD
U=4WD (RHD)

BODY STYLES:

YJ=Wrangler (4X4) "S"
Weangler (4X4) SE
Wrangler (4X4) Sahara
Wrangler (4X4) Renegade
XJ=Cherokee SE
Cherokee Sport
Cherokee Country
ZJ=Grand Cherokee SE
Grand Cherokee Laredo
Grand Cherolee Limited
ZG=Grand Cherokee European
Y1=Wrangler
X1=Cherokee
Z1=Grand Cherokee
KDX=Vehicles

AR = Use as Required - = Non Illustrated Part P.A.R. = Paint as Required

WIRING--INSTRUMENT PANEL GRAND CHEROKEE
Figure 8-1415

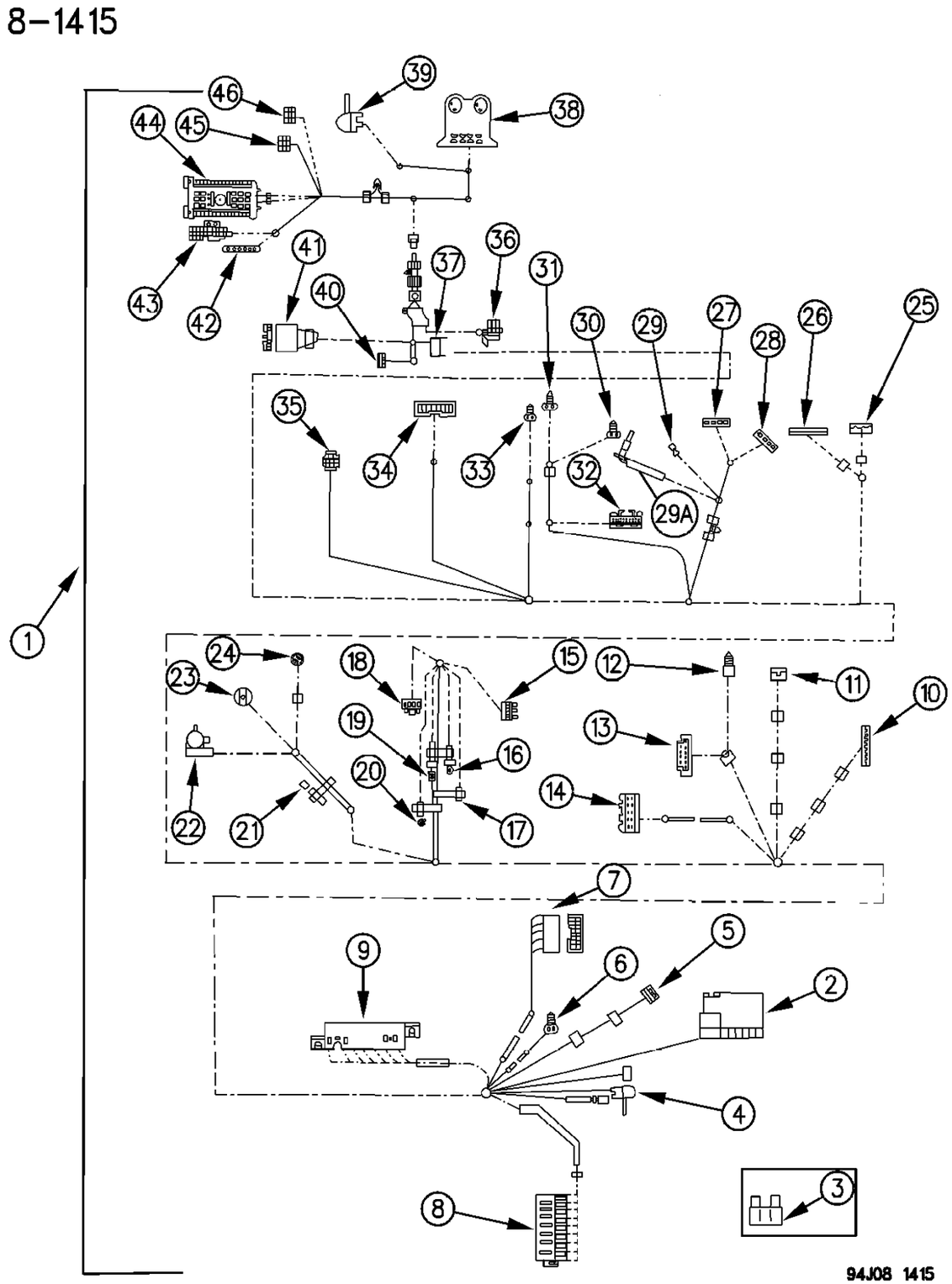

ITEM	PART NUMBER	QTY	BODY	MODEL	DESCRIPTION
1					WIRING, Inst. Panel
		1			Auto Temp. Control
	5601 8993				1994
	5601 0401				1995
	5604 2722				1996
	5603 7411		ZG		1996 (RHD)
		1			w/ A.C.
	5601 8994				1994
	5601 0226				1995
	5603 7412		ZG		1996 (RHD)
	5604 2724	1			1996 w/Vechicle Information Center & Auto. H/Lamps
	5604 2725	1			1996 w/o Vehicle Information Center & w/o Auto. H/Lamps
	5601 8996	1			w/A.C., Heater Sunroof, 6 Speakers, Power Mirror
	5601 0401				1995
	5601 8997	1			Auto. Temp., KDX, EUROPE
	5601 9484				1995
	5601 8998	1			w/A.C, Heater w/Bi-level Ventilation, KDX, EUROPE
	5601 9485				1995
	5601 8999				w/A.T.C., Canada
	5601 9486				1995
	5601 9550				w/A.C., Canada
	5601 9487				1995
-	5600 4577	1			CUP, Mounting 100-Way Connector
2		1			FUSE BLOCK, (Serv. Assy.)
-	5601 8922	1			BAR ASSEMBLY, Bar (1996) ***
3	6101 482				FUSE, Miniture, 3 Amp.
	6101 484				5 Amp.
	6101 485				7.5 Amp.
	6101 486				10 Amp.
	6101 487				15 Amp.
	6101 488				20 Amp.
	J323 1219				30 Amp.
	6101 679				20-Amp., Maxi
	6101 640				30-Amp., Maxi
	6101 641				40-Amp., Maxi
	6101 642				50-Amp., Maxi
	6101 643				60-Amp., Maxi
	6101 645				80-Amp., Maxi
	6101 853				175 Amp. High Current Mega Fuse
-	5600 6965	1			CIRCUIT BREAKER, 10-Amp. ***
	5600 6966				30-Amp.
-	5600 7243	AR			FLASHER, Combination ***

MODEL CODES:

72=2 DR Wagon
74=4 DR Wagon
77=Open Body 93" Whlbase
78=Open Body 103" Whlbase - Export
T=2WD
J,N=4WD
U=4WD (RHD)

BODY STYLES:

YJ=Wrangler (4X4) "S"
Weangler (4X4) SE
Wrangler (4X4) Sahara
Wrangler (4X4) Renegade
XJ=Cherokee SE
Cherokee Sport
Cherokee Country
ZJ=Grand Cherokee SE
Grand Cherokee Laredo
Grand Cherolee Limited
ZG=Grand Cherokee European
Y1=Wrangler
X1=Cherokee
Z1=Grand Cherokee
KDX=Vehicles

AR = Use as Required - = Non Illustrated Part P.A.R. = Paint as Required

WIRING--INSTRUMENT PANEL GRAND CHEROKEE
Figure 8-1415

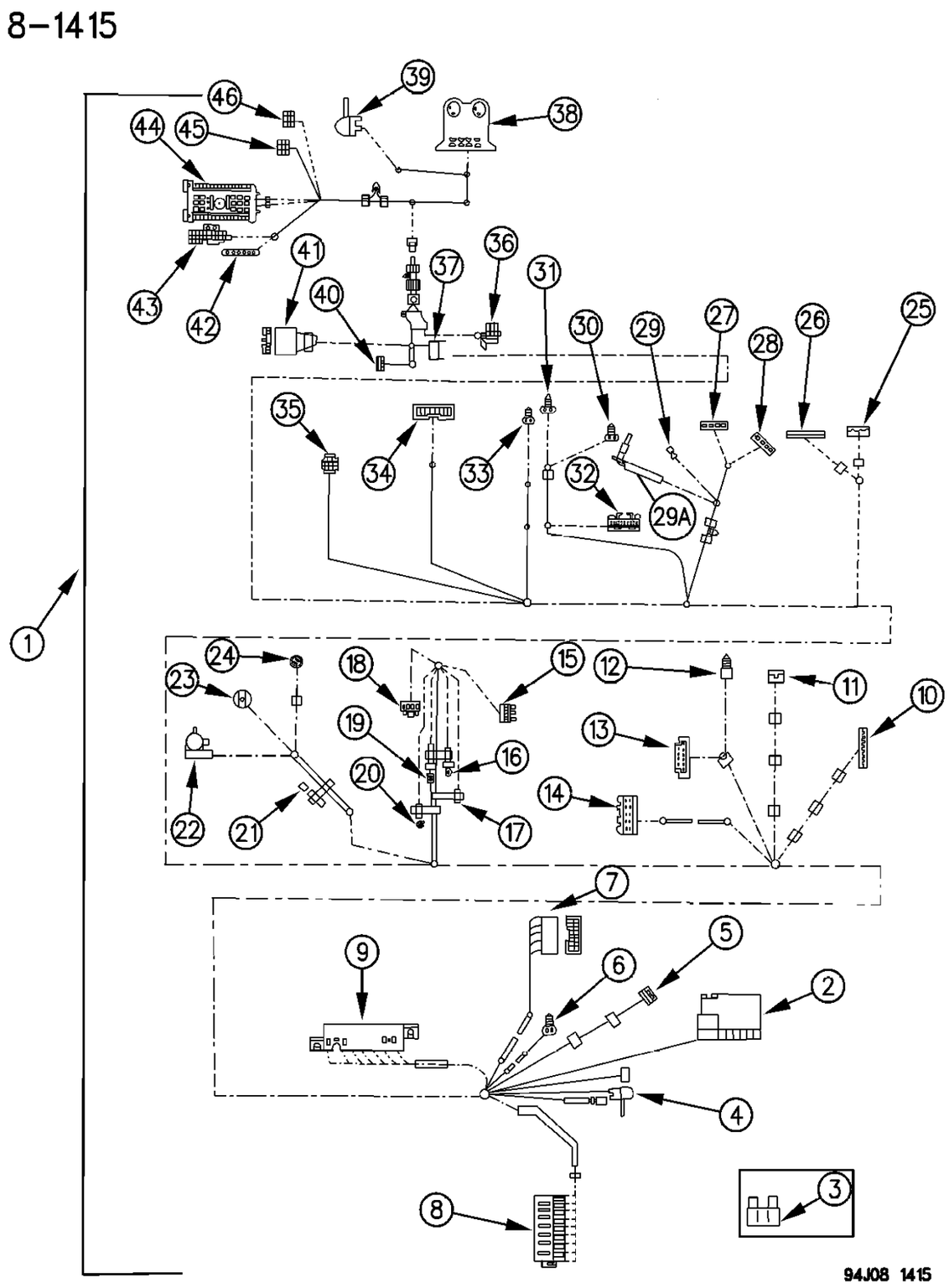

ITEM	PART NUMBER	QTY	BODY	MODEL	DESCRIPTION
-	5600 6846				RELAY, Micro, Door Lock, Security Alarm, Electronic Flash, Headlamp Flash
4	J545 0116				LENS, Courtesy Lamp, Rt.
5					INSULATOR, Antenna Conn. (Serv. Assy.)
6					INSULATOR, Tweeter Rt., Not Serv.
7	4527 252				INSULATOR, HEVAC Conn.
8	5601 7848				INSULATOR, Disconnect 100-Way
9					RELAY BLOCK, Serv. Assy. ***
10	4209 947				INSULATOR, Auto. Headlamp
11	4209 927				INSULATOR, Glove Box Lamp
12					INSULATOR, In-Car Temp. Sensor
13	5601 7674				INSULATOR, S.A.M.
14	5601 7747				INSULATOR, HEVAC Module
15					INSULATOR, VIC/GDM
16					INSULATOR, Serv. Assy.
17					INSULATOR, Serv. Assy.
18					INSULATOR, Serv. Assy.
19					INSULATOR, Serv. Assy.
20					INSULATOR, 249 T/C, Serv. Assy.
21					INSULATOR, Eng. Metric, Serv. Assy.
22	5600 5536				INSULATOR, Cigar Lighter
23					SOCKET, Cigar Lamp, Serv. Assy.
24	4374 704				SOCKET, Ash Reciever Lamp
25	4504 253				INSULATOR, Rear Wipe & Wash
26	4209 948				INSULATOR, HBL/Overdrive
27	4720 927				INSULATOR, Radio #2
28					INSULATOR, Radio #1, Use #27 Pkg.
29					TERMINAL, Radio Ground, Not Serv.
29A	5600 5500				CABLE, Antenna
30					INSULATOR, Solar Sensor, Serv. Assy.
31					INSULATOR, Twilight Light Sensor, Serv. Assy.
32					INSULATOR, Cluster Conn., 16-Way, Serv. Assy.
33					INSULATOR, Tweeter Lt., Serv. Assy.
34	4527 252				INSULATOR, Headlamp Switch
35					INSULATOR, Mirror Switch, Serv. Assy.
36					INSULATOR, Turn Signal Switch, Serv. Assy.
37	4504 256				INSULATOR, Ignition Switch
38	5600 5774				INSULATOR, Convenience Center
39	J545 0116				LENS, Courtesy Lamp, Lt.
40	4527 387				INSULATOR, Key Switch, Lt.
41	4527 389				INSULATOR, Clock Spring
42					INSULATOR, Wiper Module #1, Serv. Assy.

MODEL CODES:

72=2 DR Wagon
74=4 DR Wagon
77=Open Body 93" Whlbase
78=Open Body 103" Whlbase - Export
T=2WD
J,N=4WD
U=4WD (RHD)

BODY STYLES:

YJ=Wrangler (4X4) "S"
Weangler (4X4) SE
Wrangler (4X4) Sahara
Wrangler (4X4) Renegade
XJ=Cherokee SE
Cherokee Sport
Cherokee Country
ZJ=Grand Cherokee SE
Grand Cherokee Laredo
Grand Cherolee Limited
ZG=Grand Cherokee European
Y1=Wrangler
X1=Cherokee
Z1=Grand Cherokee
KDX=Vehicles

AR = Use as Required - = Non Illustrated Part P.A.R. = Paint as Required

WIRING--INSTRUMENT PANEL GRAND CHEROKEE
Figure 8-1415

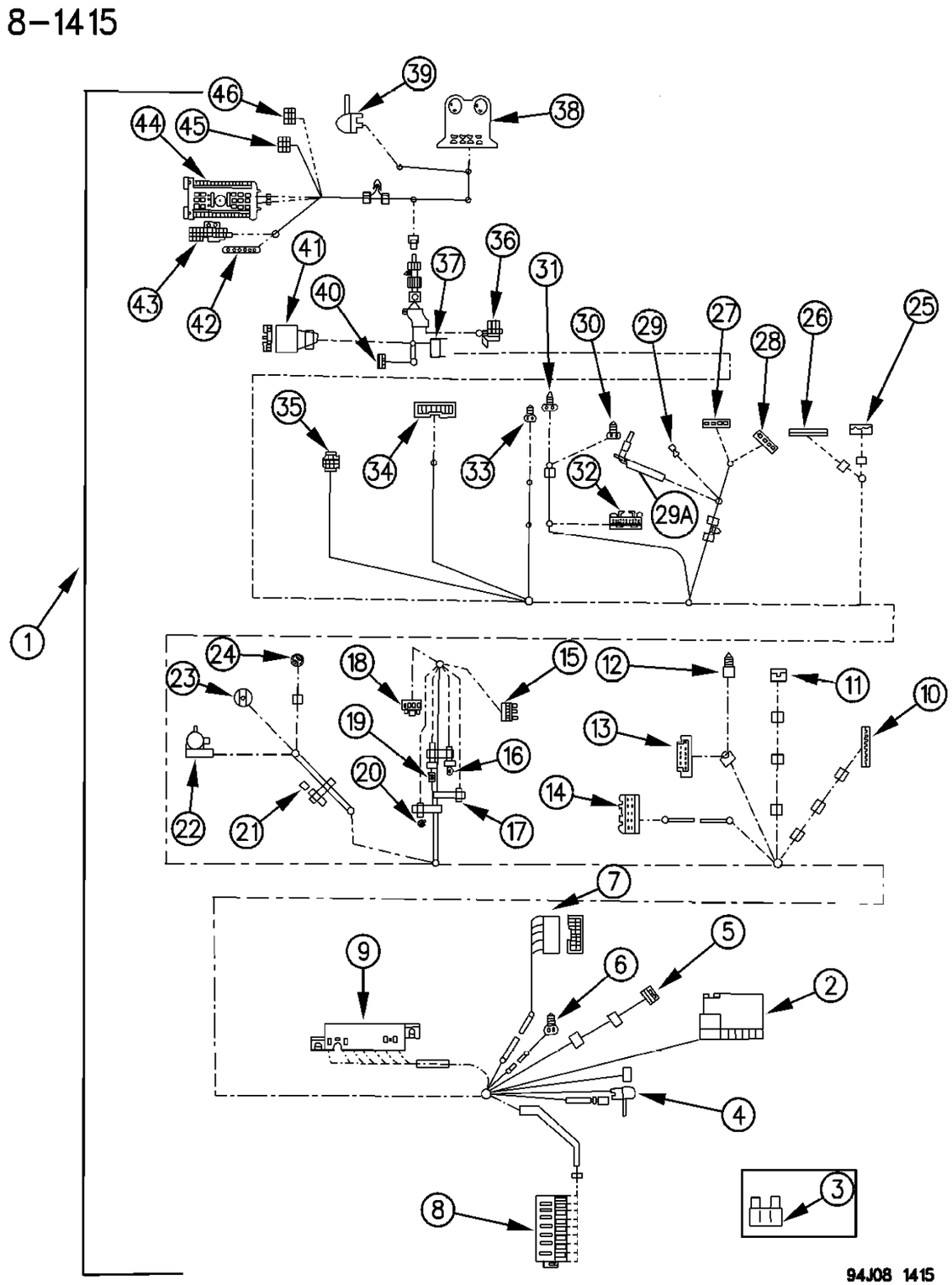

ITEM	PART NUMBER	QTY	BODY	MODEL	DESCRIPTION
43	4304 532				INSULATOR, To Eng. Wire
44					INSULATOR, To Body Wire, Lt.
45	4209 712				INSULATOR, Brake Switch
46	4504 269				INSULATOR, Inst. Panel Dimming Switch
-	5600 1077				BUZZER, Multiple Input
-					Block Assembly, Junction ***
	5601 8509	1	ZJ		
	5604 2002	1	ZG		RHD
	5604 2257	1	ZG		LHD

MODEL CODES:

72=2 DR Wagon
74=4 DR Wagon
77=Open Body 93" Whlbase
78=Open Body 103" Whlbase - Export
T=2WD
J,N=4WD
U=4WD (RHD)

BODY STYLES:

YJ=Wrangler (4X4) "S"
Weangler (4X4) SE
Wrangler (4X4) Sahara
Wrangler (4X4) Renegade

XJ=Cherokee SE
Cherokee Sport
Cherokee Country

ZJ=Grand Cherokee SE
Grand Cherokee Laredo
Grand Cherolee Limited
ZG=Grand Cherokee European

Y1=Wrangler
X1=Cherokee
Z1=Grand Cherokee
KDX=Vehicles

AR = Use as Required - = Non Illustrated Part P.A.R. = Paint as Required

WIRING--BODY AND ACCESSORY WRANGLER
Figure 8-1505

8-1505

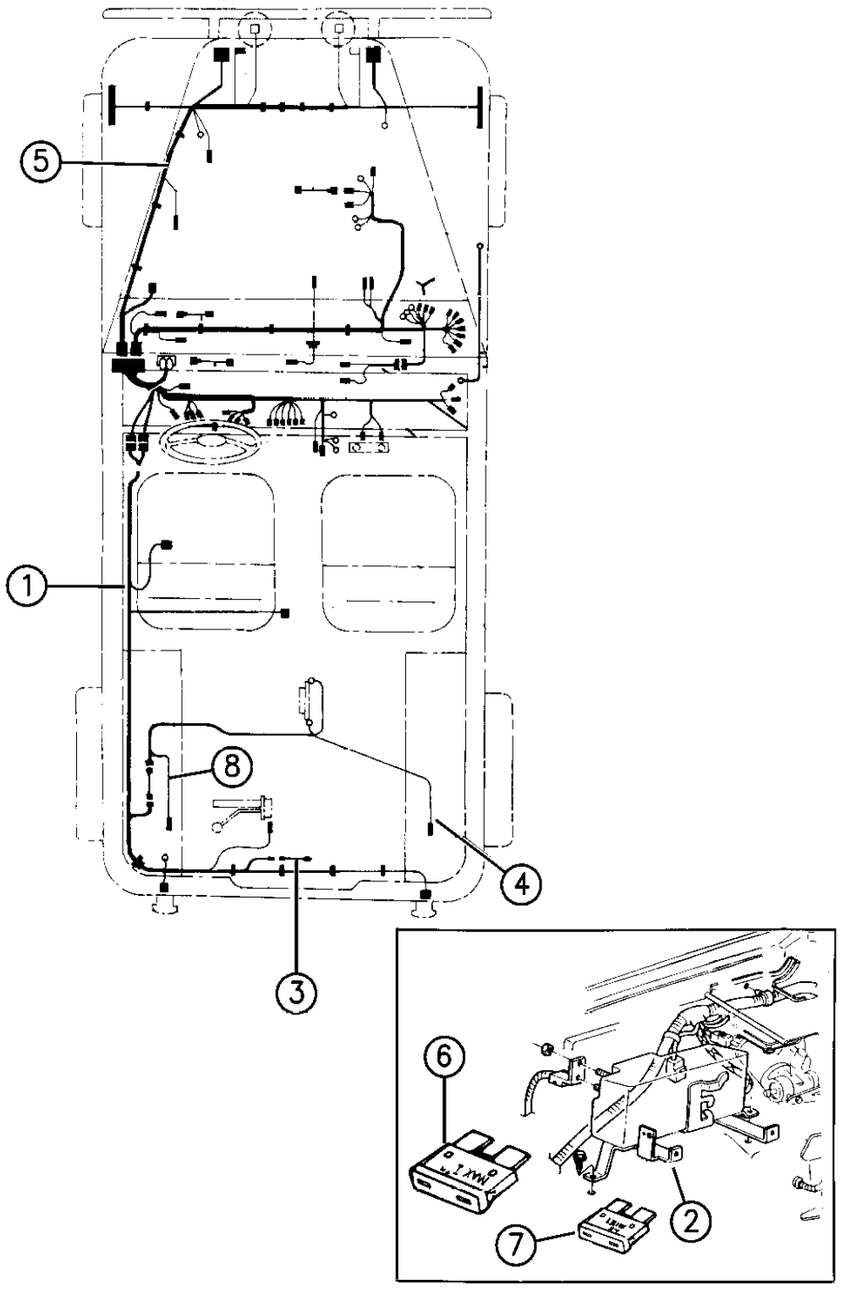

94J08 1505

ITEM	PART NUMBER	QTY	BODY	MODEL	DESCRIPTION
1					WIRING, Rear Body
					Hard Top
	5600 9190				w/E.B.L.
	5600 9191				w/o E.B.L.
	5600 9192				Soft Top
	5601 7983	1			Soft Top, EUROPE
	5601 7982	1			Hard Top, EUROPE
2	5534 4768	1			BRACKET, Power Distribution Center
3	5600 4483	1			WIRING, Rear Fog Lamp, EUROPE
4	5601 6831	1			WIRING, Plastic Enclosure (Hard Top)
5					WIRING, Front End Lighting
	5601 8821				U.S.A.
	5601 7611				EUROPE
	4636 359	2			SOCKET, Side Marker
6					FUSE, Maxi
	6101 679	AR			20 Amp, Yellow
	6101 640	AR			30 Amp, Green
	6101 641	AR			40 Amp, Amber
	6101 642	AR			50 Amp, Red
7					FUSE, Mini
	6101 481	AR			2 Amp, Gray
	6101 484	AR			5 Amp, Tan
	6101 486	AR			10 Amp, Red
	6101 487	AR			15 Amp, Blue
	6101 488	AR			20 Amp, Yellow
8	5601 7440	1			WIRING, Rear Speaker
-	5601 7442	2			WIRING, Courtesy Lamp
-	5601 8274				WIRING, Auto. Trans. Jumper
	5600 7587				Auto Trans 1995 ***
	5601 8275				Man. Trans., Jumper
	5600 7588				Manual Trans 1995 ***
-	5601 8091				WIRING, Hi-Mtd. Stop Lamp
-	5601 8565				WIRING, Hi-Mtd. Stop Lamp Jumper
-	4741 983				WIRING, Jumper Actuator, EUROPE
-	8350 5394				WIRING, Fog Lamp

MODEL CODES:

72=2 DR Wagon
74=4 DR Wagon
77=Open Body 93" Whlbase
78=Open Body 103" Whlbase - Export
T=2WD
J,N=4WD
U=4WD (RHD)

BODY STYLES:

YJ=Wrangler (4X4) "S"
Weangler (4X4) SE
Wrangler (4X4) Sahara
Wrangler (4X4) Renegade
XJ=Cherokee SE
Cherokee Sport
Cherokee Country
ZJ=Grand Cherokee SE
Grand Cherokee Laredo
Grand Cherolee Limited
ZG=Grand Cherokee European
Y1=Wrangler
X1=Cherokee
Z1=Grand Cherokee
KDX=Vehicles

AR = Use as Required - = Non Illustrated Part P.A.R. = Paint as Required

WIRING--BODY AND ACCESSORY CHEROKEE
Figure 8-1510

8-1510A

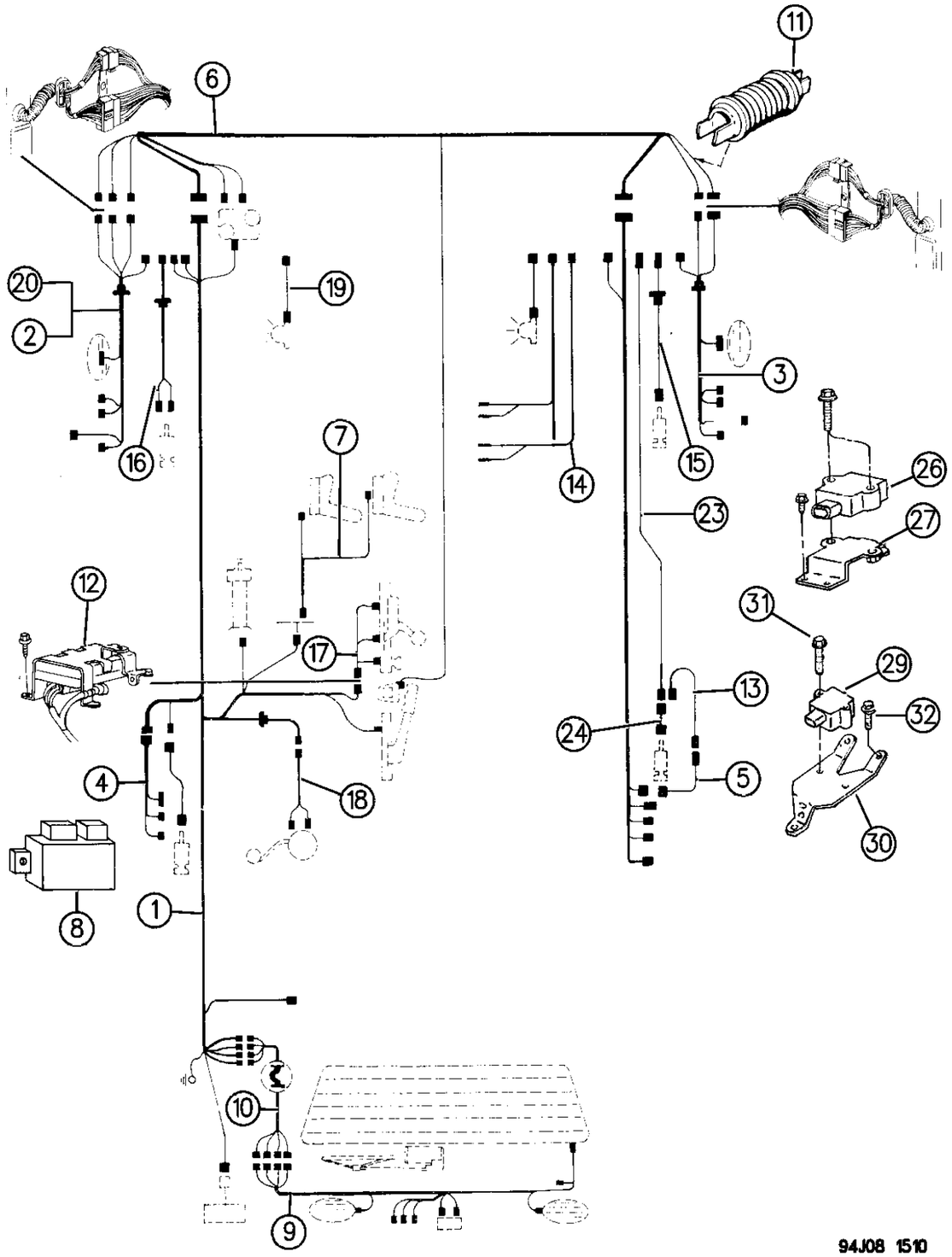

ITEM	PART NUMBER	QTY	BODY	MODEL	DESCRIPTION
1		1			WIRING ASSEMBLY, Body (Right) ***
					1994-96
	5601 8914			74	w/Power Locks
	5601 9612			72,74	w/Rear Wiper & w/o Power Locks
		1			WIRING ASSEMBLY, Body (Left) ***
					1994(LHD)
	5602 0233			72	w/Power Locks & Seats
	5602 0235			74	w/Power Locks
	5602 0231			72,74	w/o Power Locks/Seats
					1994 (RHD)
	5602 0239			72,74	w/ABS
	5602 0243			72,74	w/Power Brakes Fonnt Disc/Rear Drum
	5602 0241			74	w/Power Locks & Windows
	5602 0239			74	w/o Power Locks/Windows
					1995 (LHD)
	5602 0245			72	w/Power Locks & Seats
	5602 0244			72,74	w/o Power Locks/Seats
	5602 0246			74	w/Power Locks
					1995 (RHD)
	5601 9564			74	w/Power Locks & Windows
	5601 9563			72,74	w/o Power Locks/Windows
					1996 (LHD)
				74	w/Power Locks
	5600 9326				Right
	5600 9328				Left
	5600 9330			72	w/Power Locks
	5600 9329			72,74	w/o Power Locks
					1996 (RHD)
	5600 9327			72	w/Power Locks & Seats
	5600 9327			74	w/Power Locks & Seats
	5600 9334			72,74	w/o Power Locks/Seats
			XJ,X1	72,74	Body, w/Pwr. Wdo. & Locks, Rt., RHD
	5601 9358				1994
2		1			WIRING, Lt. Front Door
					1994
	5601 9241		XJ	72	w/Pwr. Wdo. & Mirrors
	5601 7693		XJ	72	w/Pwr. Wdo, w/o Pwr. Mirror
	5601 8850		XJ,X1	74	w/Power Window, Power Lock and Power Mirror 94-96
			XJ,X1	72,74	w/Pwr. Wdo. & Locks, RHD
	5601 9110				1994
	5601 9605				1995-96
	5601 8604	2	XJ,X1		w/o Pwr. Windows or Locks, RHD

MODEL CODES:

72=2 DR Wagon
74=4 DR Wagon
77=Open Body 93" Whlbase
78=Open Body 103" Whlbase - Export
T=2WD
J,N=4WD
U=4WD (RHD)

BODY STYLES:

YJ=Wrangler (4X4) "S"
Weangler (4X4) SE
Wrangler (4X4) Sahara
Wrangler (4X4) Renegade
XJ=Cherokee SE
Cherokee Sport
Cherokee Country
ZJ=Grand Cherokee SE
Grand Cherokee Laredo
Grand Cherolee Limited
ZG=Grand Cherokee European
Y1=Wrangler
X1=Cherokee
Z1=Grand Cherokee
KDX=Vehicles

AR = Use as Required - = Non Illustrated Part P.A.R. = Paint as Required

WIRING--BODY AND ACCESSORY CHEROKEE
Figure 8-1510

8-1510A

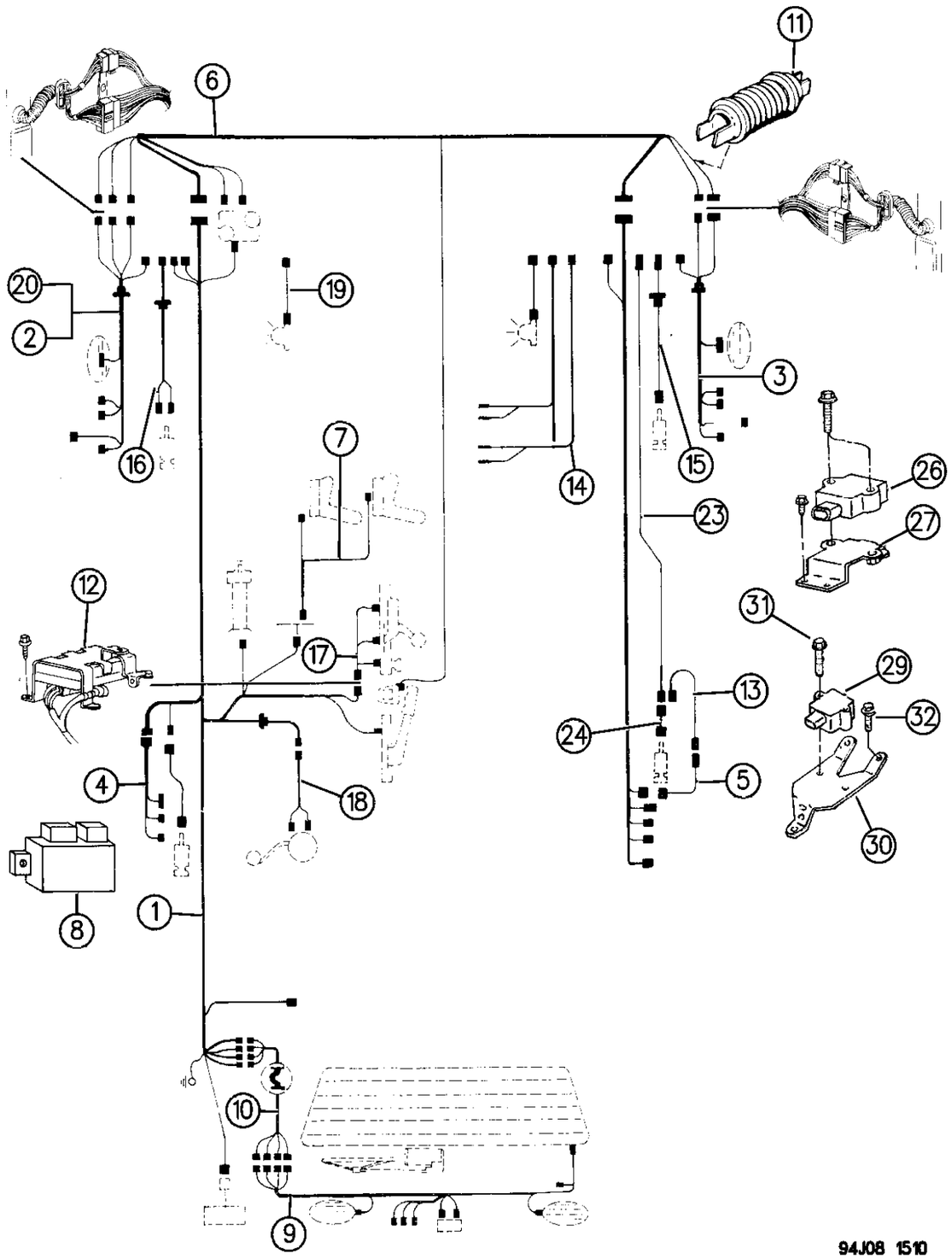

ITEM	PART NUMBER	QTY	BODY	MODEL	DESCRIPTION
	5601 8113	1	XJ		Power Windows and Locks ***
3		1			WIRING, Rt. Front Door
	5601 9240		XJ,X1	72	WIRING, Rt. Front Door, LHD with power windows, locks, and mirrors
	5601 8604			72	w/o Pwr. Wdo., w/ Pwr. Lock
	5601 8154			72	w/Pwr, Wdo., w/o Pwr. Mirror (LHD)
					w/Pwr. Wdo., w/Pwr. Lock
	5601 8624			72	1994
	5601 8902			72	1995-96
	5601 9180			74	1994
	5601 8903			74	1995-96
4					WIRING, Left Front Door (Lt. Bodyside) See Item # 1
5	5601 8914		XJ		WIRING, Right Rear Door (Rt. Bodyside)
6	5601 9177		XJ	74	WIRING, Crossbody, w/Power Windows, w/ or w/o Locks
	5601 9700		XJ,X1		W/ or w/o Power Mirror
	5601 8904		XJ,X1		EUROPE, KDX (RHD)
	5601 8535		XJ,X1		RHD, Exc. Europe
	5601 8536	1	XJ,X1	72	w/Pwr. Wdo. & Locks
	5601 8702		X1		Crossbody, Venezuela
	5601 9552	1	XJ,X1	74	CROSSBODY
7	5601 8628		XJ,X1		WIRING, Pwr. Seat, Lt.
	5601 8627	2	XJ,X1		6-Way
8		1			MODULE, Lamp Outage
9		1			WIRING ASSEMBLY, Liftgate ***
					1994
	5601 9619				
	5601 9740		XJ		Power Locks (1994) ***
	5601 8888		X1		w/o Rear Wiper
	5601 8889		X1		w/Security Alarm, Venezuela
	5601 9748				1995-96
10		1			WIRING ASSEMBLY, Body to Liftgate ***
	5601 9740				1994 Power Locks
	5601 8629				1994 w/Security Alarm (Venezuela)
	5601 8498				1994 (China)
	5601 9748				1995
	5601 9852				1996
11	5503 4132	4	XJ		TUBE, Protector
12		1			MODULE, w/Driver Side Air Bag, (Not Used)
13	5600 4406	2	XJ		WIRING, Courtesy Lamp
14	5600 9965		XJ		WIRING, Dome & Reading Lamp, w/Keyless Entry & w/o Overhead Console
15	5600 9967	1	XJ,X1		WIRING, Dome Lamp, Rt.

MODEL CODES:

72=2 DR Wagon
74=4 DR Wagon
77=Open Body 93" Whlbase
78=Open Body 103" Whlbase - Export
T=2WD
J,N=4WD
U=4WD (RHD)

BODY STYLES:

YJ=Wrangler (4X4) "S"
Weangler (4X4) SE
Wrangler (4X4) Sahara
Wrangler (4X4) Renegade
XJ=Cherokee SE
Cherokee Sport
Cherokee Country
ZJ=Grand Cherokee SE
Grand Cherokee Laredo
Grand Cherolee Limited
ZG=Grand Cherokee European
Y1=Wrangler
X1=Cherokee
Z1=Grand Cherokee
KDX=Vehicles

AR = Use as Required - = Non Illustrated Part P.A.R. = Paint as Required

WIRING--BODY AND ACCESSORY CHEROKEE
Figure 8-1510

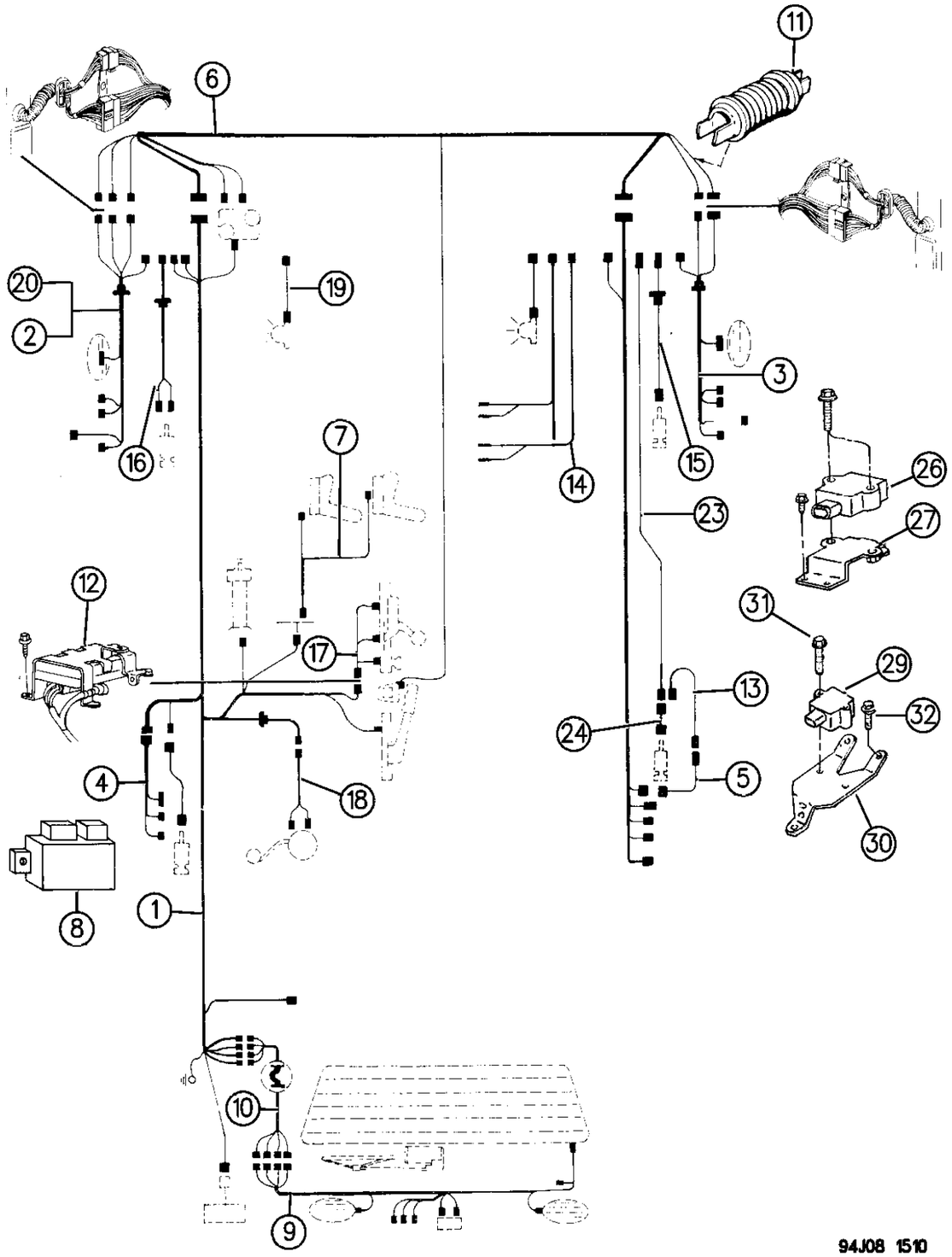

ITEM	PART NUMBER	QTY	BODY	MODEL	DESCRIPTION
16	5600 4916	1	XJ		WIRING, Door Switch Jumper, Lt.
-	5600 9969				WIRING, Dome Lamp, Police Pkg.
17		1			WIRING ASSEMBLY, Transfer Case Jumper ***
	5601 8361	1			WIRING, Transfer Case Jumper
-	5600 2600	1	XJ		WIRING, Transfer Case Jumper, w/231, 6-Cyl., Auto. Trans.
	5601 7873				4-Cyl. Eng., Auto. Trans.
18					WIRING, Fuel Tank (Serv. w/Pump)
	5600 1860	1	X1		4-Cyl. Eng., 1 BBL. Carb
19	5600 4406	1	XJ,X1		WIRING, Courtesy Lamp
20	5601 9116	2	XJ		WIRING, Speaker, Frt. Door
23		1	XJ		WIRING, Rear Door Switch (Serv. w/Rt. & Lt. Bodyside Wiring
24	5600 3766	2	XJ	74	WIRING, Switch Adaptive
26	5600 6315	1	XJ		SWITCH, Accelerator (ABS)
27	5200 7278		XJ		BRACKET
29	5602 6993	1	XJ		MODULE, Adaptive Brakes
30	5602 6742	1	XJ		BRACKET, "G" Switch
31	3420 2183	2	XJ		SCREW, Module Mounting
32	3420 1261	3	XJ		SCREW, Bracket Mounting
-	5600 9963		XJ,X1		WIRING, Overhead Console
-	5601 8638				WIRING, Front End Lighting, w/Road Lamps
	5601 8425				w/o Road Lamps
	5601 9294				w/Headlamp Leveling, EUROPE
	5601 8601				EUROPE
-	8220 1224				WIRING, Fog & Driving Lamp
-	8220 1225		XJ		WIRING, Switch Jumper
-	5601 7638				WIRING, Radio Base Adaptive
-	5601 7759		XJ		WIRING, A.B.S. Disconect
-	5601 8483		XJ		WIRING, Trailer Tow (7-WAY) has 3 relays in wiring
-	5505 4760				WIRING, Hi-Mtd. Stop Lamp Pigtail
-	5601 8508				WIRING, Cargo Lamp
-					WIRING, 300 Watt Cooling Fan
	5601 8717				1994-95
	5600 9058				1996
-	5601 8359				WIRING, Distance Sensor Jumper, 4WD
-	5601 8576				WIRING, Transmission, 4-Cyl. Carb. Or Diesel Eng.
-	5601 7459				WIRING, Adaptive License, w/Outside Mtd. Spare Tire
-	5600 9968				WIRING, Dome Lamp
-	5601 8612				WIRING, Console, PRNDL Illum.
-	5601 8651		X1		WIRING, Body Lt., China
-	5601 9689				WIRING, Soundbar 1994
	5601 9754				1995-1996 ***
-	5601 9552	1	74	xj, x1	WIRING,Assembly Crossbody W/Opts.

MODEL CODES:

72=2 DR Wagon
74=4 DR Wagon
77=Open Body 93" Whlbase
78=Open Body 103" Whlbase - Export
T=2WD
J,N=4WD
U=4WD (RHD)

BODY STYLES:

YJ=Wrangler (4X4) "S"
Weangler (4X4) SE
Wrangler (4X4) Sahara
Wrangler (4X4) Renegade
XJ=Cherokee SE
Cherokee Sport
Cherokee Country
ZJ=Grand Cherokee SE
Grand Cherokee Laredo
Grand Cherolee Limited
ZG=Grand Cherokee European
Y1=Wrangler
X1=Cherokee
Z1=Grand Cherokee
KDX=Vehicles

AR = Use as Required - = Non Illustrated Part P.A.R. = Paint as Required

WIRING--BODY AND ACCESSORY GRAND CHEROKEE
Figure 8-1520

8-1520

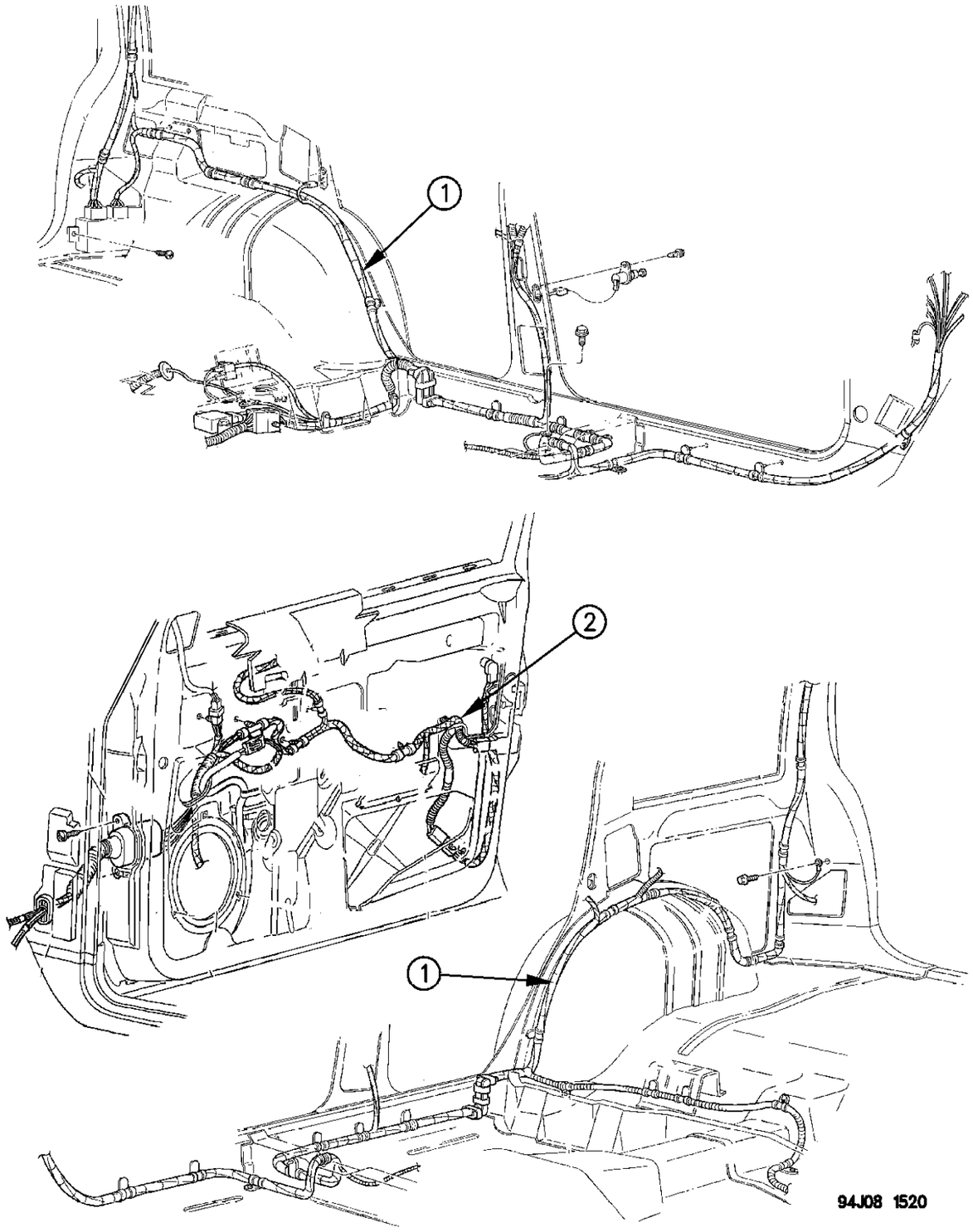

ITEM	PART NUMBER	QTY	BODY	MODEL	DESCRIPTION
1		1			WIRING, Body Side Lt., (W/ or w/o Power Seat)
	5601 0166				1994-95
	5601 9163	1			left w/trailer tow,power windows,power locks, power seat, security,overhead console (1994) ***
	5515 6176	1			left trailer tow, Power window,power locks (1995) ***
					Right, w/Power Amp
	5601 7924				Up to 02/14/94
	5600 7632				After 02/14/94
		1			Right, w/o Power Amp
	5601 9164				Up to 02/14/94
	5600 7635				After 02/14/94 (Repair Pkg. 4761589 6-Way)
					1996
	5604 2798				w/Six Speaker Stereo System & Heated Front Seats
	5604 2799				w/Six Speaker Stereo System & w/Power Seat w/Recline Memory Driver Seat
	5604 2812				w/Six Speaker Stereo System & w/o Heated Seats/Recline Memory
	5604 2813				w/Power Seat/Lumbar& Recline
	5604 2814				w/Trailer Tow Prep Package
	5604 2815				Base Model
	5603 7075		ZG		WIRING, Body w/o Laredo Pkg. 1996 (RHD)
	5603 7076		ZG		WIRING, Body w/Laredo Pkg. 1996 (RHD)
-		1			HARNESS, Front Door Jumper (Right)
	5601 9690				1994
	5600 8800				1995
	5604 2080				1996
2					WIRING, Front Door
	5603 7068		ZG		Rt Door 1996 (RHD)
	5603 7665		ZG		Lt Door 1996 (RHD)
		1			Security Alarm w/Pwr. Wdo. & Locks
	5601 8370-1				1994
	5600 8930-1				1995-96
	5601 8374-5	1			w/Pwr. Wdo. & Locks
	5600 8932-3				w/pwr Wdo. & Lks 1995 ***
	5601 8660	2			w/o Pwr. Wdo. & Locks, w/o Security Alarm
-		1			HARNESS, Front Door Jumper (Left) w/boot
	5601 8721				1994
	5600 8801				1995
-	5601 8540	2			WIRING, Rear Door w/Retainer for Rubber Conduit Tube (Stamped 56018534) 1994-1995
	5604 2084	2			1996 ***
-		1			WIRING, Liftgate

MODEL CODES:

72=2 DR Wagon
74=4 DR Wagon
77=Open Body 93" Whlbase
78=Open Body 103" Whlbase - Export
T=2WD
J,N=4WD
U=4WD (RHD)

BODY STYLES:

YJ=Wrangler (4X4) "S"
Weangler (4X4) SE
Wrangler (4X4) Sahara
Wrangler (4X4) Renegade
XJ=Cherokee SE
Cherokee Sport
Cherokee Country
ZJ=Grand Cherokee SE
Grand Cherokee Laredo
Grand Cherolee Limited
ZG=Grand Cherokee European
Y1=Wrangler
X1=Cherokee
Z1=Grand Cherokee
KDX=Vehicles

AR = Use as Required - = Non Illustrated Part P.A.R. = Paint as Required

WIRING--BODY AND ACCESSORY GRAND CHEROKEE
Figure 8-1520

8-1520

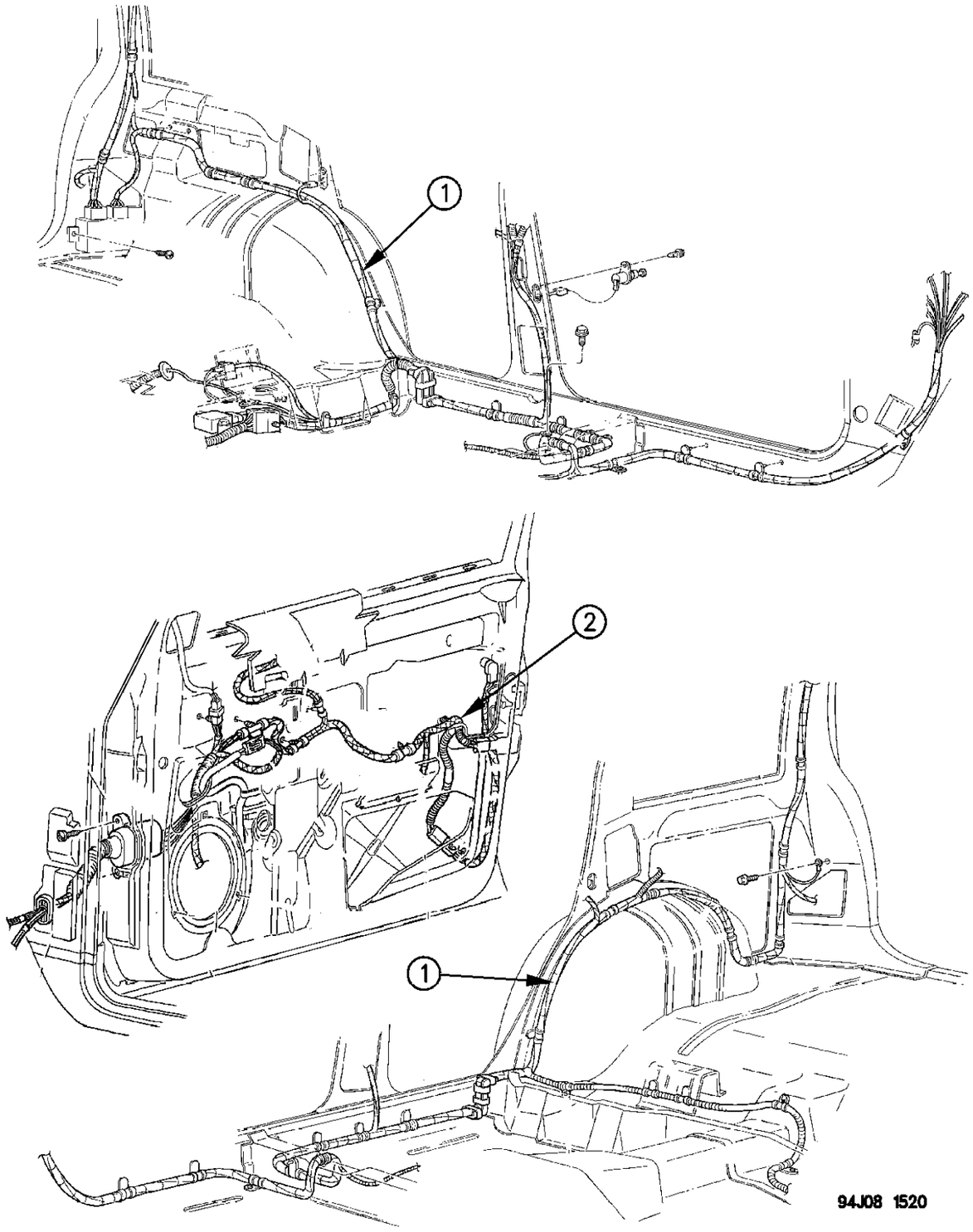

ITEM	PART NUMBER	QTY	BODY	MODEL	DESCRIPTION
	5601 8975				1994 w/ or w/o Security Alarm
	5600 8854				1995 w/Flipper Glass
	5600 8856				1995 w/o Flipper Glass
	5604 2345				1996 w/Flipper Glass
	5604 2260				1996 w/o Flipper Glass
-		1			WIRING, Overhead Console
					Type I
	5601 8803				1994
	5600 9193				1995
	5601 8804				1996-97
					Type II
	5601 9511				1994
	5600 9194				1995
	5600 9196				1996-97
-	5601 7615	1			WIRING, Trailer Tow Relays 1994-1995
	5601 8697	1			1996 ***
-	5601 7622	1			WIRING, Trailer Tow (Class B) 1994-1995
	5603 8354	1			1996 ***
-	5600 6315	1			SWITCH, Accelerator (ABS) (Brkt. 56027093) also called "G" Sensor Swirch
-	6034 484	2			SCREW, Switch to Bracket
-		1			WIRING, Fog Lamps
	5601 8693				1994-95
	4856 399				1996
	4762 281				WIRING, Elec. Fan, MIDEAST
-		1	ZJ		WIRING, Underhood Lamp
	5601 8694				1994-95
	5600 9167				1996
-	5601 9340	1			WIRING, w/Power Sunroof
-	4638 186				WIRING, PRNDL/Transfer Case
-	5601 8720-1	1			WIRING, Front Door Jumper, w/Pwr. Wdos.
-		1			WIRING, Overhead Console & Keyless Entry
	5601 9511				1994
	5600 9194				1995-96
-					WIRING, Overhead Console, w/Sockets & Map Lamp Switch
	5521 4857				1994-96 (Type II)
	4773 569				1995 (Type I)
	4863 981				1996 (Type I)
-	5505 4960				WIRING, Clearance Lamp Jumper
-	4481 618				WIRING, Side Repeater, EUROPE
-	5601 7746	2			WIRING, Front End Lighting
-	5601 7266	2			WIRING, Headlamp Module, EUROPE

MODEL CODES:

72=2 DR Wagon
74=4 DR Wagon
77=Open Body 93" Whlbase
78=Open Body 103" Whlbase - Export
T=2WD
J,N=4WD
U=4WD (RHD)

BODY STYLES:

YJ=Wrangler (4X4) "S"
Weangler (4X4) SE
Wrangler (4X4) Sahara
Wrangler (4X4) Renegade
XJ=Cherokee SE
Cherokee Sport
Cherokee Country
ZJ=Grand Cherokee SE
Grand Cherokee Laredo
Grand Cherolee Limited
ZG=Grand Cherokee European
Y1=Wrangler
X1=Cherokee
Z1=Grand Cherokee
KDX=Vehicles

AR = Use as Required - = Non Illustrated Part P.A.R. = Paint as Required

WIRING--BODY AND ACCESSORY GRAND CHEROKEE
Figure 8-1520

8-1520

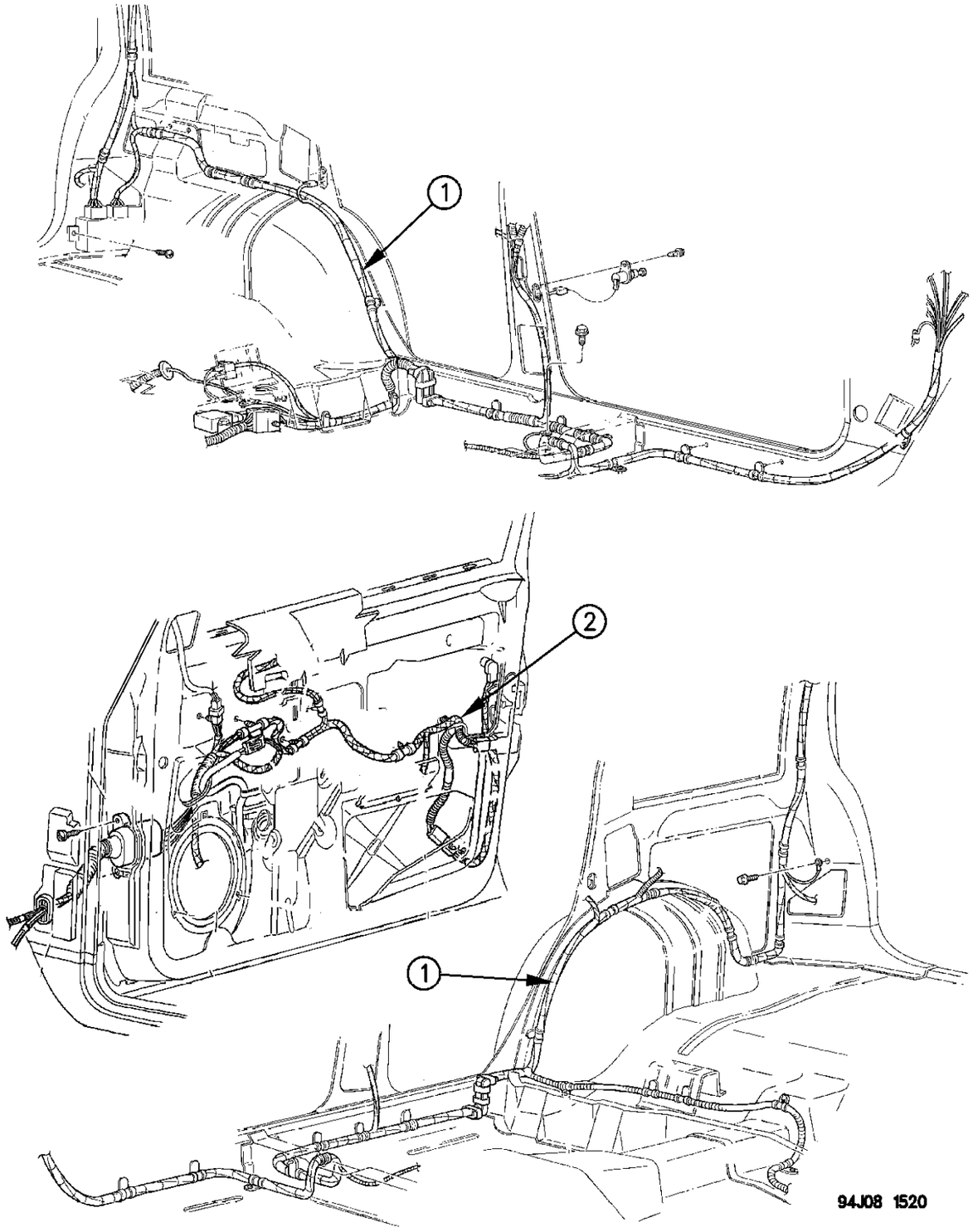

ITEM	PART NUMBER	QTY	BODY	MODEL	DESCRIPTION
-		2			WIRING, Taillamp
	4761 588				Up to 02/14/94
	5600 7560				After 02/14/94
	4761 588				1995-96
-		1			WIRING, Taillamp, EUROPE
	4761 590-1				Up to 02/14/94
	5600 7558-9				After 02/14/94
-	5601 8293				WIRING, Taillamp Extension
-		1			WIRING, Hi-Mtd. Stop Lamp
	5601 8444				1994
	5601 8668				1995
-	5601 9658				WIRING, Speaker Jumper, w/o Power Amp.
-					WIRING, Power Seat
	5600 5772-3				1994-95
	5600 7662				1996 (Left)
	5600 7666				1996 (Left w/Memory
	5600 7667				1996 (Left w/Memory & Heat)
	5600 7669				1996 (Right w/o Heat)
	5600 7670				1996 (Right w/Heat)
	5603 6897	1	ZG		w/Heat, w/o Child Seat, Lt. (RHD)
	5603 6815	1	ZG		w/Heat, w/Child Seat, Lt. (RHD)
	5603 6892	1	ZG		w/Memory and Heat, w/o Child Seat Rt. (RHD)
	5603 6814	1	ZG		w/Memory and Heat, w/Child Seat Rt. (RHD)
-	5600 8889				WIRING, Cruise Switch Jumper
-	5600 8888				WIRING, Cruise/Remote Radio Switch Jumper
-	4856 792		ZG		WIRING, ATC, RHD, EUROPE

MODEL CODES:

72=2 DR Wagon
74=4 DR Wagon
77=Open Body 93" Whlbase
78=Open Body 103" Whlbase - Export
T=2WD
J,N=4WD
U=4WD (RHD)

BODY STYLES:

YJ=Wrangler (4X4) "S"
Weangler (4X4) SE
Wrangler (4X4) Sahara
Wrangler (4X4) Renegade
XJ=Cherokee SE
Cherokee Sport
Cherokee Country
ZJ=Grand Cherokee SE
Grand Cherokee Laredo
Grand Cherolee Limited
ZG=Grand Cherokee European
Y1=Wrangler
X1=Cherokee
Z1=Grand Cherokee
KDX=Vehicles

AR = Use as Required - = Non Illustrated Part P.A.R. = Paint as Required

CRIMP SPLICE--FUSIBLE LINK--HEAT SHRINK
Figure 8-1605

8-1605

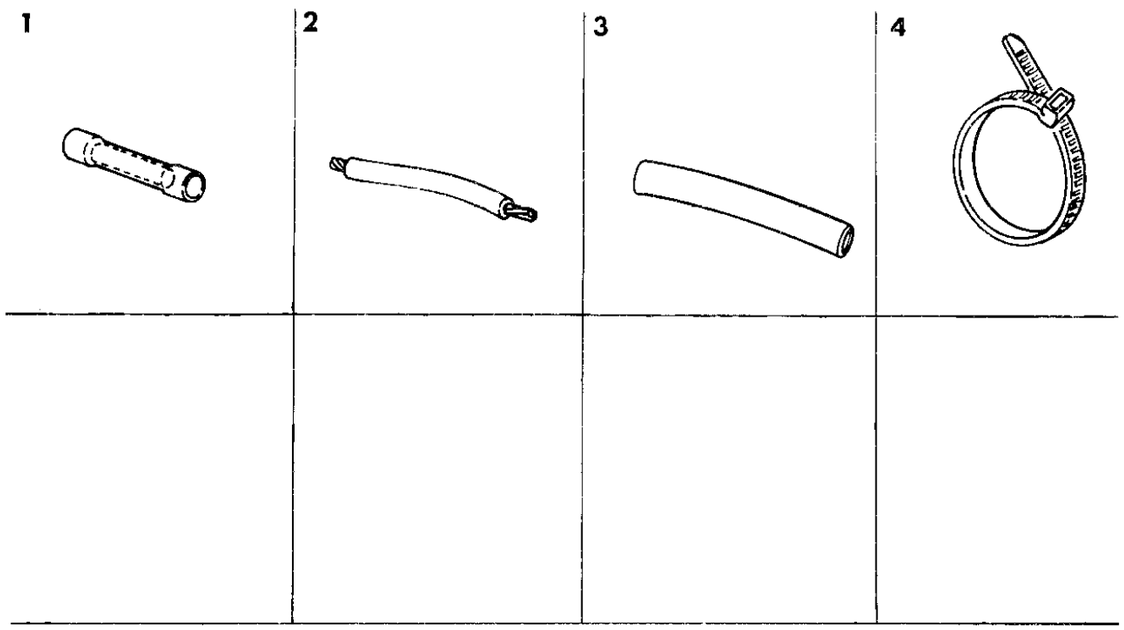

ITEM	PART NUMBER	QTY	BODY	MODEL	DESCRIPTION
1	4439 004	1			CRIMP PACKAGE, 18-22 Gauge, (3 Pieces)
	4439 005	1			14-16 Gauge (3 Pieces)
	4439 006	1			10-12 Gauge (3 Pieces)
2	4364 877	1			FUSIBLE LINK PACKAGE, (D/Green-10 Gauge (4 12" Pieces) ***
	4364 876	1			(Black-12 Gauge) (4 12" Pieces)
	4364 875	1			(Red-14 Gauge) (4 12" Pieces)
	4364 874	1			(D/Blue-16 Gauge) (4 12" Pieces)
	4364 873	1			(Gray-18 Gauge) (4 12" Pieces)
	4364 878	1			(Orange-20 Gauge) (4 12" Pieces)
	4419 351	1			(White-22 Gauge) (4 12" Pieces)
3	4419 644	1			HEAT SHRINK TUBE, 1/4" x 2" Long
4	6015 756	1			TY-STRAPS, 6.75" Long (To Tie 1/16" to 2 1/8" of Wire)
	6016 155	1			14" Long (To Tie 3/16" to 4" of Wire)
					DIODE'S
	4364 393				CONVOLUTE TUBING, 1/4", 10 Foot Roll ***
	4364 375				3/8", 10 Foot Roll
	4364 392				5/8", 10 Foot Roll
-	4723 783				INSULATOR, Crank Position Sensor (Repair)
-	4419 586		XJ,ZJ		INSULATOR, Distance Sensor, (Repair)
-	4638 991				INSULATOR, Ign. Coil, (Repair)
-	4638 996				INSULATOR, Neutral Safety & PRNDL Switch (Repair)
-	4746 116				INSULATOR, A/C Hi-Pressure Switch (Repair)
-	4762 468		ZJ,Z1		INSULATOR, A/C Hi-Pressure Cutoff Switch
-	4762 470		ZJ,Z1		INSULATOR, A/C Low Pressure Cutoff Switch
-	4419 491				INSULATOR, E.A.T.X., A-604 (Repair)
-	4419 479				INSULATOR, 60-Way Controller (Repair)
	4419 492		XJ,YJ		
	4419 493		ZJ,Z1		
-	4638 991				INSULATOR, Ignition Coil (Repair)
-	4638 996				INSULATOR, Neutral Safety/PRNDL Switch (Repair)
-	4625 065				INSULATOR, Hi-Mtd. Stop Lamp (Repair)
-	5013 930AA	1			WIRING PACKAGE. Underhood Connector Repair 1996 ***

MODEL CODES:

72=2 DR Wagon
74=4 DR Wagon
77=Open Body 93" Whlbase
78=Open Body 103" Whlbase - Export
T=2WD
J,N=4WD
U=4WD (RHD)

BODY STYLES:

YJ=Wrangler (4X4) "S"
Weangler (4X4) SE
Wrangler (4X4) Sahara
Wrangler (4X4) Renegade
XJ=Cherokee SE
Cherokee Sport
Cherokee Country
ZJ=Grand Cherokee SE
Grand Cherokee Laredo
Grand Cherolee Limited
ZG=Grand Cherokee European
Y1=Wrangler
X1=Cherokee
Z1=Grand Cherokee
KDX=Vehicles

94J08 1605

AR = Use as Required - = Non Illustrated Part P.A.R. = Paint as Required

TERMINAL CHART
Figure 8-1705

8–1705

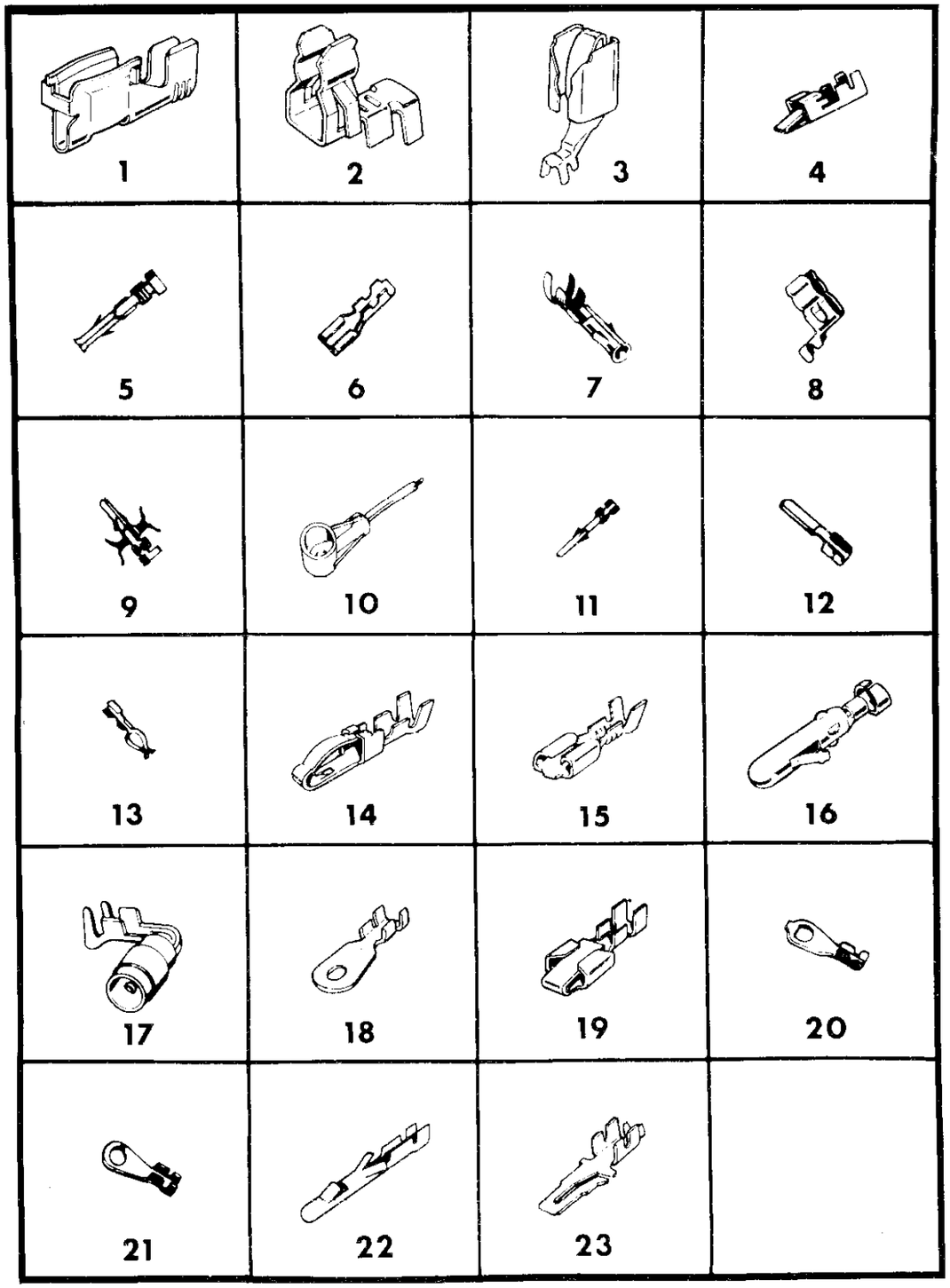

94J08 1705

ITEM	PART NUMBER	QTY	BODY	MODEL	DESCRIPTION
1	3513 613				TERMINAL
2	3591 596				TERMINAL
3	3764 607				TERMINAL
4	2496 532				TERMINAL
5	2983 410				TERMINAL
6	2580 061				TERMINAL
7	3513 544				TERMINAL
8	2926 722				TERMINAL
9	2983 411				TERMINAL
10	3588 946				TERMINAL
11	2983 409				TERMINAL
12	2983 412				TERMINAL
13	3513 586				TERMINAL
14	3764 556				TERMINAL
15	3764 570				TERMINAL
16	3513 543				TERMINAL
17	3843 577				TERMINAL
18					TERMINAL, (Serv. Assy)
19	3588 819				TERMINAL
20	3513 637				TERMINAL
21	3438 709				TERMINAL
22	3513 756				TERMINAL
23	3513 692				TERMINAL

MODEL CODES:

72=2 DR Wagon
74=4 DR Wagon
77=Open Body 93" Whlbase
78=Open Body 103" Whlbase - Export
T=2WD
J,N=4WD
U=4WD (RHD)

BODY STYLES:

YJ=Wrangler (4X4) "S"
Weangler (4X4) SE
Wrangler (4X4) Sahara
Wrangler (4X4) Renegade
XJ=Cherokee SE
Cherokee Sport
Cherokee Country
ZJ=Grand Cherokee SE
Grand Cherokee Laredo
Grand Cherolee Limited
ZG=Grand Cherokee European
Y1=Wrangler
X1=Cherokee
Z1=Grand Cherokee
KDX=Vehicles

AR = Use as Required - = Non Illustrated Part P.A.R. = Paint as Required

« RETURN TO GROUP INDEX

TERMINAL CHART
Figure 8-1705

8-1710

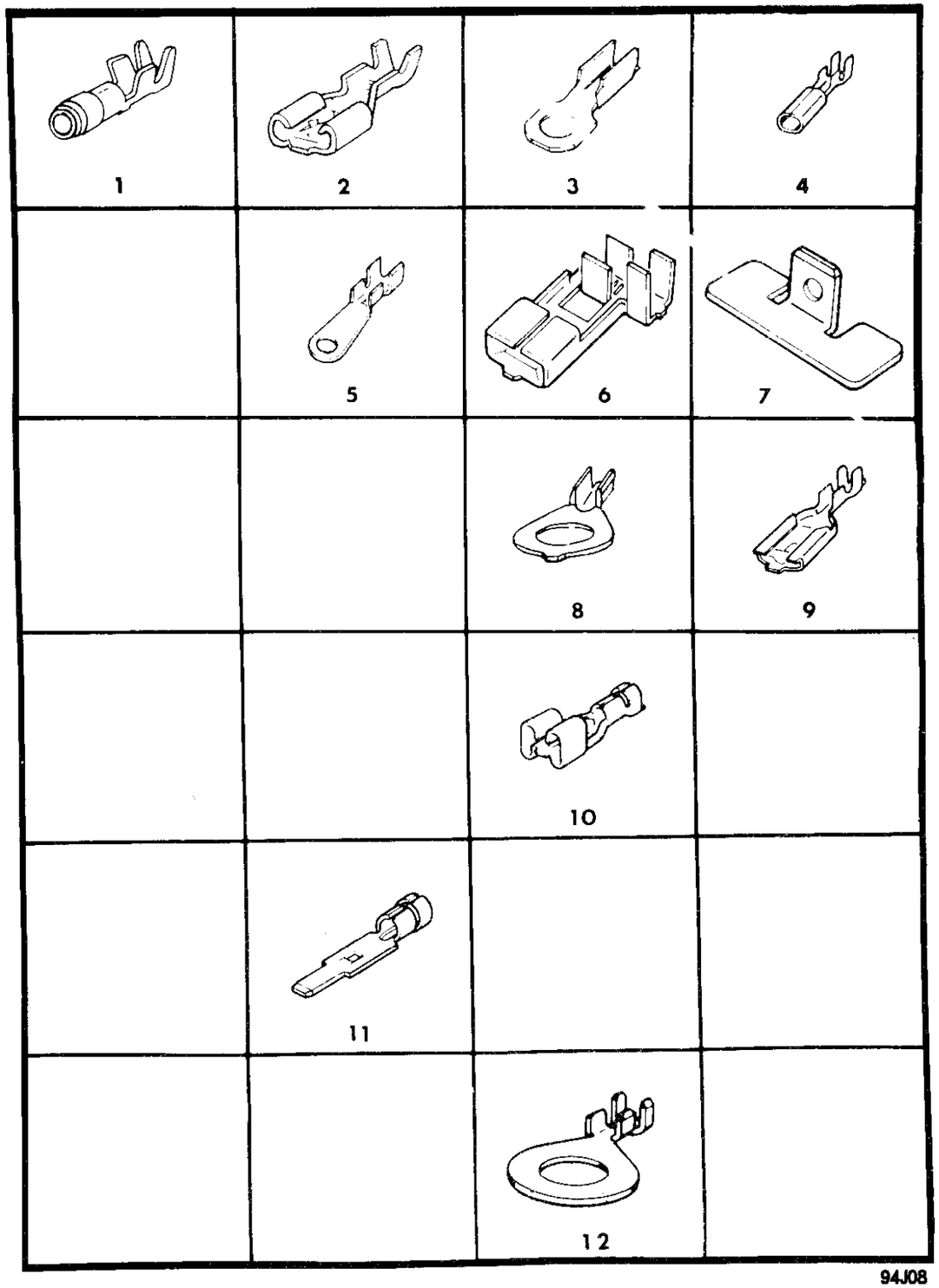

ITEM	PART NUMBER	QTY	BODY	MODEL	DESCRIPTION
1	3843 576				TERMINAL
2	4400 775				TERMINAL
3	2197 947				TERMINAL
4	2983 410				TERMINAL
5	2290 069				TERMINAL
6	4055 468				TERMINAL
7	4055 775				TERMINAL
8	5211 602				TERMINAL
9	1704 562				TERMINAL
10	3843 601				TERMINAL
11	3843 386				TERMINAL
12	5211 599				TERMINAL

MODEL CODES:

72=2 DR Wagon
74=4 DR Wagon
77=Open Body 93" Whlbase
78=Open Body 103" Whlbase - Export
T=2WD
J,N=4WD
U=4WD (RHD)

BODY STYLES:

YJ=Wrangler (4X4) "S"
Weangler (4X4) SE
Wrangler (4X4) Sahara
Wrangler (4X4) Renegade

XJ=Cherokee SE
Cherokee Sport
Cherokee Country

ZJ=Grand Cherokee SE
Grand Cherokee Laredo
Grand Cherolee Limited
ZG=Grand Cherokee European

Y1=Wrangler
X1=Cherokee
Z1=Grand Cherokee
KDX=Vehicles

AR = Use as Required - = Non Illustrated Part P.A.R. = Paint as Required

« RETURN TO GROUP INDEX

COIL--SPARKPLUGS--WIRES 2.5 ENGINE
Figure 8-1905

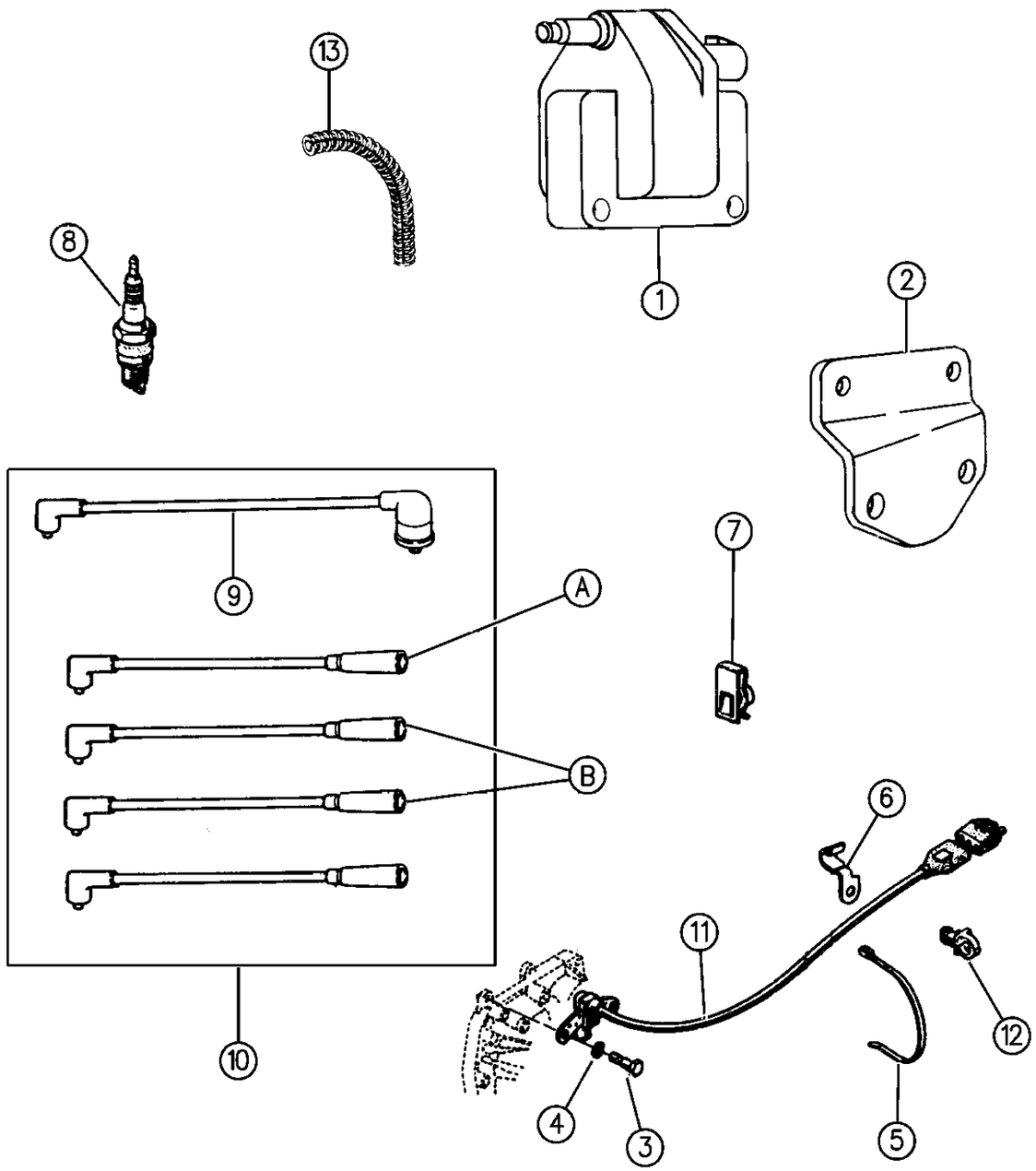

ITEM	PART NUMBER	QTY	BODY	MODEL	DESCRIPTION
1	5234 210	1			COIL, Ign. EFI Engine (Insul. 4638991) (OPTIONAL w/5234610)
2	5300 8702	1			BRACKET, Ignition Coil
	5602 6760	1	X1		Carb. Eng., KDX
3	6503 520	2			BOLT, EFI Engine
4	T140 2084	2			WASHER, EFI Eng.
5	6015 756	1			STRAP, EFI Eng.
6	3420 2771	1	YJ		CLIP, EFI Eng.
7	J400 4208	2	X1		NUT, Carbureted Eng. KDX
8					SPARK PLUG
	5602 7275	4			RC 12LYC
	5600 6240	4	X1		RC 12YC, Carbureted Eng., XJ, KDX - China
9	5602 7270	1			WIRE, Coil
10	8350 7180	1			WIRE SET, Ignition (Includes Coil Wire) ***
11	5602 6882				SENSOR, Eng. Speed EFI Eng.
-	3420 2536	AR			STUD
-	6503 520	2			SCREW & WASHER (Sensor to Bell Hsg.) ***
12	3420 1633	1			CLIP, EFI Eng.
13	J324 2860	AR	X1		SHIELD, Spark Plug Wire #1 & 4 & Coil Wire, Carb. Eng.
A	3300 7153				WIRE, Spark Plug, #3
B	3300 7157				WIRE, Spark Plug, #2-4
-	5300 6579				SEPERATOR, 4-Wire

MODEL CODES:

72=2 DR Wagon
74=4 DR Wagon
77=Open Body 93" Whlbase
78=Open Body 103" Whlbase - Export
T=2WD
J,N=4WD
U=4WD (RHD)

BODY STYLES:

YJ=Wrangler (4X4) "S"
Weangler (4X4) SE
Wrangler (4X4) Sahara
Wrangler (4X4) Renegade

XJ=Cherokee SE
Cherokee Sport
Cherokee Country

ZJ=Grand Cherokee SE
Grand Cherokee Laredo
Grand Cherolee Limited
ZG=Grand Cherokee European

Y1=Wrangler
X1=Cherokee
Z1=Grand Cherokee
KDX=Vehicles

AR = Use as Required - = Non Illustrated Part P.A.R. = Paint as Required

« RETURN TO GROUP INDEX

COIL--SPARKPLUGS--WIRES 4.0 ENGINE
Figure 8-1910

8-1910A

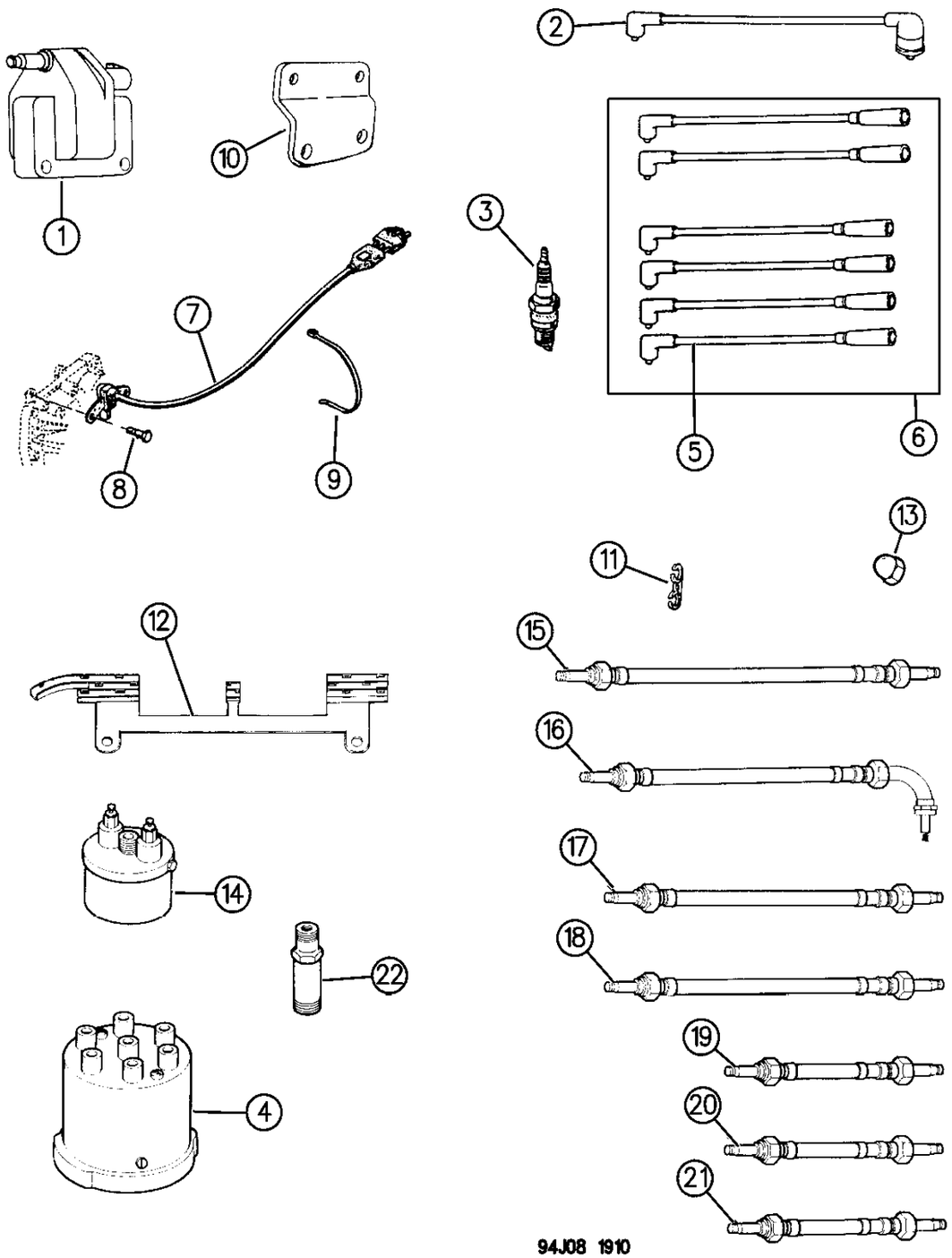

ITEM	PART NUMBER	QTY	BODY	MODEL	DESCRIPTION
1	5234 210	1			COIL, Ignition (Insul. 4638991)
2	5300 7182	1			WIRE, Coil
3	5602 7275				SPARK PLUG, RC 12 LYC
	4318 134	6	Y1		RS 12YC, EGYPT, w/Static Supression for Two-Way Radios
4	4713 256	1	Y1		SHIELD, Distributor
5					WIRE, Ignition
	5300 8070	1			#1
	3300 7157	1			#2
	3300 7158	1			#3-4
	5300 8069	1			#5
	5300 8628	1			#6
6	8350 7178	1			WIRE SET, Ignition, (Includes Coil Wire) ***
7		1			SENSOR, Crankshaft Position
	5602 6921			ZJ	w/Manual Transmissions
	5602 7280			ZJ	w/Automatic Transmission
	5602 6882			XJ	
	5602 7865	1	XJ		4.0 Engine (with sales code XCY) ***
	5602 6882		YJ		4.0L Engine, Manual Trans ***
	5602 7280			YJ	
-	3420 2536	AR			STUD
-	5252 229	1			SPACER, Sensor
-	5604 1008	1			SHIELD, Sensor Cover
8	6503 520	2			SCREW & WASHER (Sensor to Bell Hsg.) ***
9	J322 3227	1			STRAP
10	5602 6890	1			BRACKET, Ignition Coil
11		1			SEPARATOR, Ign. Wire
12	3300 7154	1			SEPARATOR
13	6033 560	2			NUT, (1/4x20)
					NOTE: ITEMS 14-23--EGYPT w/2-WAY RADIOS
14	4713 255	1	Y1		SHIELD, Coil
15	4713 254	1	Y1		CABLE, Coil
16	4713 253	1	Y1		CABLE, Spark Plug #1
17	4713 252	1	Y1		CABLE, Spark Plug #2
18	4713 251	1	Y1		CABLE, Spark Plug #3
19	4713 250	1	Y1		CABLE, Spark Plug #4
20	4713 249	1	Y1		CABLE, Spark Plug #5
21	4713 248	1	Y1		CABLE, Spark Plug #6
22	4713 247	6	Y1		ENCLOSURE, Spark Plug ***

MODEL CODES:

72=2 DR Wagon
74=4 DR Wagon
77=Open Body 93" Whlbase
78=Open Body 103" Whlbase - Export
T=2WD
J,N=4WD
U=4WD (RHD)

BODY STYLES:

YJ=Wrangler (4X4) "S"
Weangler (4X4) SE
Wrangler (4X4) Sahara
Wrangler (4X4) Renegade
XJ=Cherokee SE
Cherokee Sport
Cherokee Country
ZJ=Grand Cherokee SE
Grand Cherokee Laredo
Grand Cherolee Limited
ZG=Grand Cherokee European
Y1=Wrangler
X1=Cherokee
Z1=Grand Cherokee
KDX=Vehicles

AR = Use as Required - = Non Illustrated Part P.A.R. = Paint as Required

« RETURN TO GROUP INDEX

COIL--SPARKPLUGS--WIRES 5.2 ENGINE
Figure 8-1915

8-1915

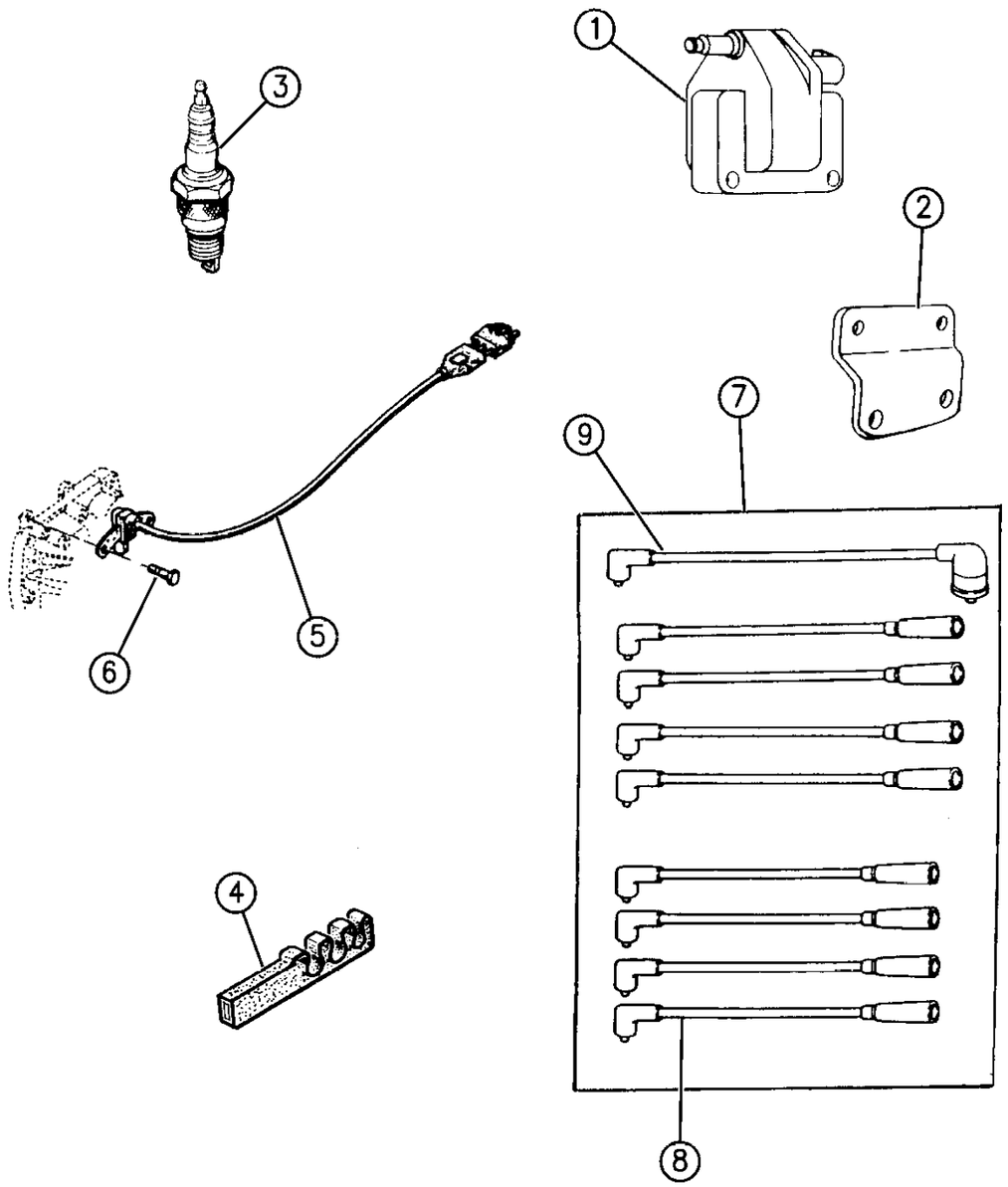

ITEM	PART NUMBER	QTY	BODY	MODEL	DESCRIPTION
1	5234 210	1			COIL, Ignition, EFI
2	5602 6891	1			BRACKET, Ignition Coil
3	5600 6240	8			SPARK PLUG, RC 12YC
4	5602 6834	1			RETAINER, Spark Plug Wire, 4-Wire
	5602 7089				3-Wire
	5602 6735				1-Wire
	5602 7057				5-Wire
5	5602 7272	1			SENSOR, Crankshaft Position
6	6035 652	1			SCREW, Sensor Mtg.
7	4728 190	1			WIRE SET, Ignition ***
8					WIRE, Ignition
	5602 7064	1			#1
	5602 7065	1			#2
	5602 7066	1			#3
	5602 7067	1			#4
	5602 7068	1			#5
	5602 7069	1			#6
	5602 7071	1			#7
	5602 7072	1			#8
9	5602 7055	1			WIRE, Coil

MODEL CODES:

72=2 DR Wagon
74=4 DR Wagon
77=Open Body 93" Whlbase
78=Open Body 103" Whlbase - Export
T=2WD
J,N=4WD
U=4WD (RHD)

BODY STYLES:

YJ=Wrangler (4X4) "S"
Weangler (4X4) SE
Wrangler (4X4) Sahara
Wrangler (4X4) Renegade
XJ=Cherokee SE
Cherokee Sport
Cherokee Country
ZJ=Grand Cherokee SE
Grand Cherokee Laredo
Grand Cherolee Limited
ZG=Grand Cherokee European
Y1=Wrangler
X1=Cherokee
Z1=Grand Cherokee
KDX=Vehicles

AR = Use as Required - = Non Illustrated Part P.A.R. = Paint as Required

« RETURN TO GROUP INDEX

SAGIPARTS

GROUP-8A
INSTRUMENT PANEL & CONSOLES

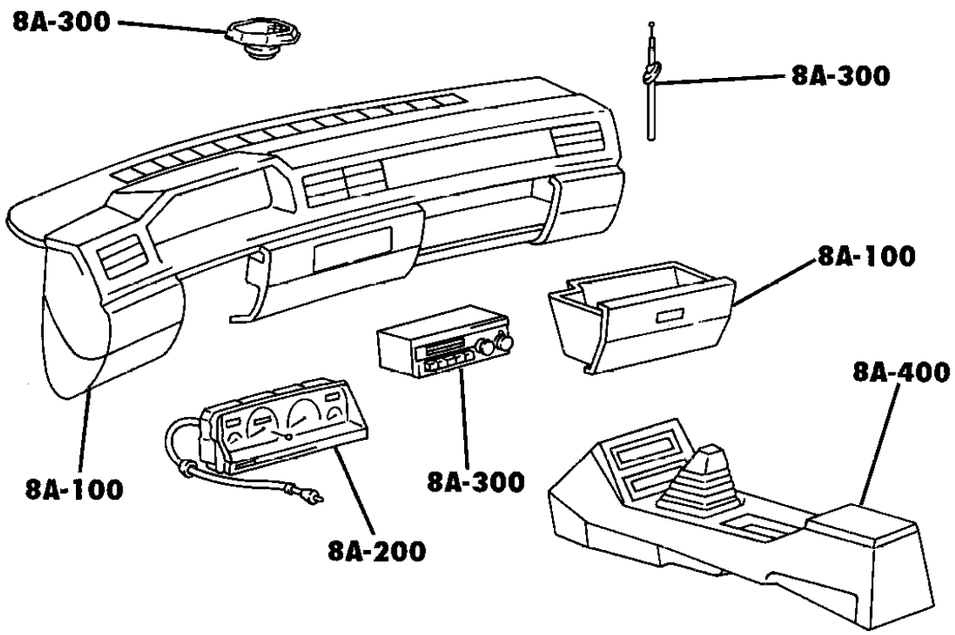

8A-100 I/PNL. & RELATED PARTS	8A-200 CLUSTER	8A-300 RADIO, ANTENNA & SPEAKER	8A-400 CONSOLE, FLOOR & OVERHEAD
GLOVEBOX--ASHTRAY			

GROUP 8A - ELECTRICAL - INSTRUMENT PANEL AND CONSOLES

ILLUSTRATION TITLE	GROUP-FIG. NO.
INSTRUMENT PANELS	
INSTRUMENT PANEL PAD AND BEZELS WRANGLER YJ	Fig. 8A-110
INSTRUMENT PANEL ASH RECEIVER AND SWITCHES WRANGLER YJ	Fig. 8A-114
INSTRUMENT PANEL PAD AND BEZELS CHEROKEE (EXC.R.H.D.)	Fig. 8A-120
INSTRUMENT PANEL PAD AND BEZELS CHEROKEE RHD	Fig. 8A-122
INSTRUMENT PANEL SWITCHES AND CIGAR LIGHTER CHEROKEE	Fig. 8A-124
INSTRUMENT PANEL 1994-95 GRAND CHEROKEE	Fig. 8A-130
INSTRUMENT PANEL 1996 GRAND CHEROKEE	Fig. 8A-135
INSTRUMENT CLUSTERS	
INSTRUMENT CLUSTER WRANGLER YJ	Fig. 8A-210
INSTRUMENT CLUSTER W/O TACHOMETER, W/GAUGES CHEROKEE	Fig. 8A-220
INSTRUMENT CLUSTER W/O TACHOMETER, W/WARNING LAMPS CHEROKEE	Fig. 8A-222
INSTRUMENT CLUSTER W/TACHOMETER, W/GAUGES CHEROKEE	Fig. 8A-224
INSTRUMENT CLUSTER GRAND CHEROKEE	Fig. 8A-230
RADIO, ANTENNA AND SPEAKERS	
RADIO, ANTENNA AND SPEAKERS WRANGLER YJ	Fig. 8A-310
RADIO AND SPEAKERS TWO SPEAKER SYSTEM CHEROKEE	Fig. 8A-320
RADIO AND SPEAKERS FOUR AND SIX SPEAKER SYSTEM CHEROKEE AND GRAND CHEROKEE	Fig. 8A-324
ANTENNA CHEROKEE	Fig. 8A-330
ANTENNA GRAND CHEROKEE	Fig. 8A-340
CONSOLES	
CONSOLE, FLOOR WRANGLER YJ	Fig. 8A-410
CONSOLE CHEROKEE	Fig. 8A-420
CONSOLE GRAND CHEROKEE	Fig. 8A-430
SHIFT BEZELS CHEROKEE AND GRAND CHEROKEE	Fig. 8A-440
CONSOLE, OVERHEAD CHEROKEE	Fig. 8A-450
CONSOLE, OVERHEAD GRAND CHEROKEE	Fig. 8A-460

INSTRUMENT PANEL PAD AND BEZELS WRANGLER YJ
Figure 8A-110

8A-110

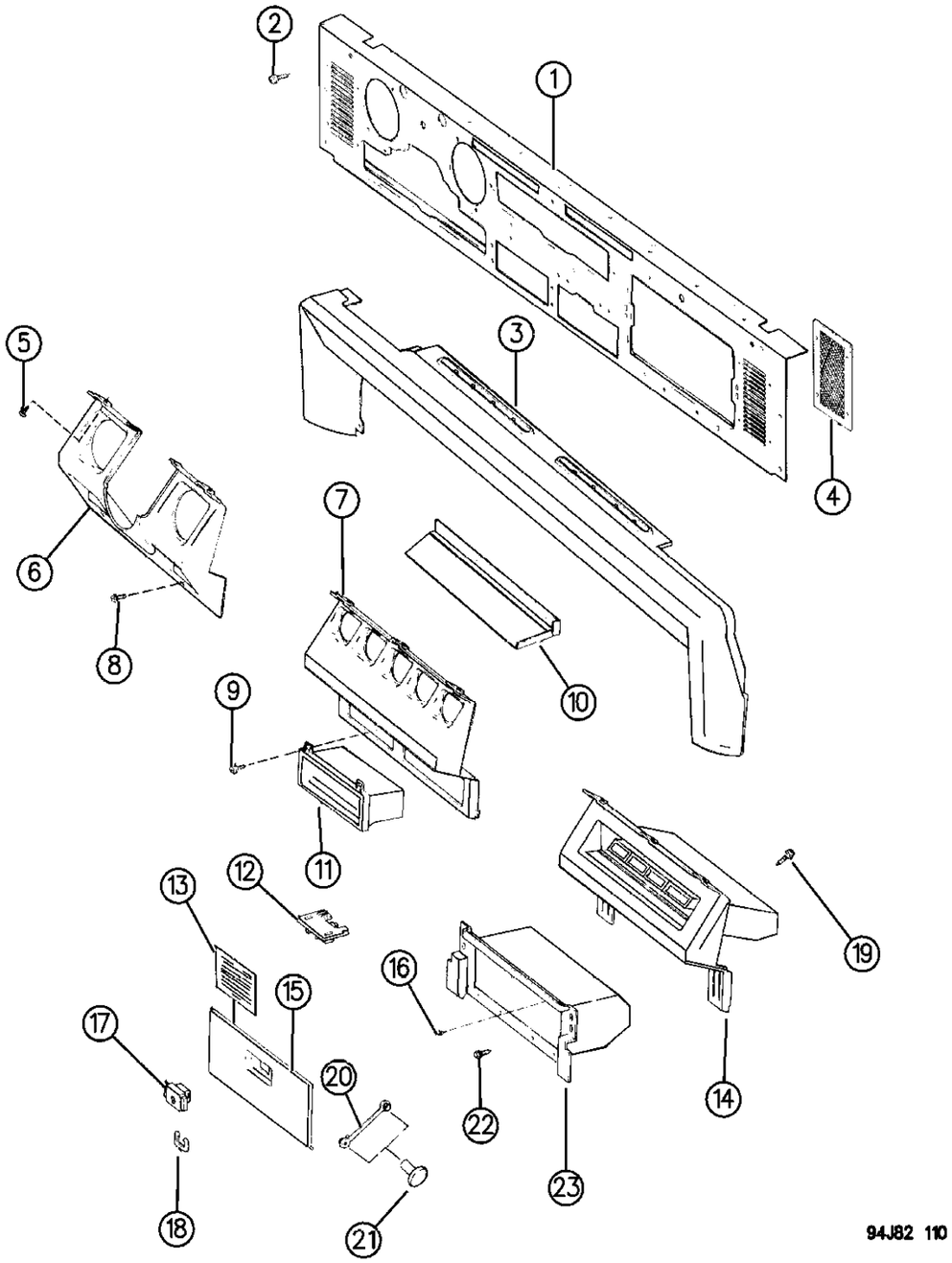

ITEM	PART NUMBER	QTY	BODY	MODEL	DESCRIPTION
1	5511 4676	1			PANEL, Instrument, P.A.R.
2	J400 4991	11			SCREW
3	5AD8 3LTB	1			PAD, Instrument Panel
4	5500 8207	2			GRILLE, Speaker
5	J400 3671	16			SCREW
6					HOUSING, Cluster
	5AS8 0KXA	1			Cinder
	5AS8 0LTB	1			Spice
7	5AD8 8JY6	1			HOUSING, Gauge P.A.R.
8	3420 1510	7			SCREW
9	J448 9487	2			SCREW
10	5501 5148	1			DEFLECTOR, Water ***
11	5500 7711	1			BIN, Storage
12	5500 0343	1			STRIKER, Glove Box
13	J315 7268	1			STICKER, Lock Type Differential ***
14		1			HOUSING, Glove Box w/Grab Handle P.A.R.
	4740 016				P.A.R.
	5EK7 5LTB				Spice (Export)
	5EK7 5KXA				Black/Silver (Export)
15	5500 7286	1			DOOR, Glove Box
-	5205 7759	1			LABEL, Air Pressure (English/French)
-	5500 9322	1			LABEL, Vehicle Towing
16	J400 0093	2			BUMPER, Glove Box Door
17	5507 5510	1			LATCH, Glove Box w/o Lock
18	5500 6506	1			RETAINER, Lock
19	J400 3671	4			SCREW
20	5502 0572	2			STRAP, Glove Box Door
21	5502 0573	2			BUTTON, Retaining
22	J941 9303	4			SCREW
23	4740 016	1			TOP, Glove Box Housing

MODEL CODES:

72=2 DR Wagon
74=4 DR Wagon
77=Open Body 93" Whlbase
78=Open Body 103" Whlbase - Export
T=2WD
J,N=4WD
U=4WD (RHD)

BODY STYLES:

YJ=Wrangler (4X4) "S"
Weangler (4X4) SE
Wrangler (4X4) Sahara
Wrangler (4X4) Renegade
XJ=Cherokee SE
Cherokee Sport
Cherokee Country
ZJ=Grand Cherokee SE
Grand Cherokee Laredo
Grand Cherolee Limited
ZG=Grand Cherokee European
Y1=Wrangler
X1=Cherokee
Z1=Grand Cherokee
KDX=Vehicles

AR = Use as Required - = Non Illustrated Part P.A.R. = Paint as Required

« RETURN TO GROUP INDEX

INSTRUMENT PANEL ASH RECEIVER AND SWITCHES WRANGLER YJ
Figure 8A-114

8A-114

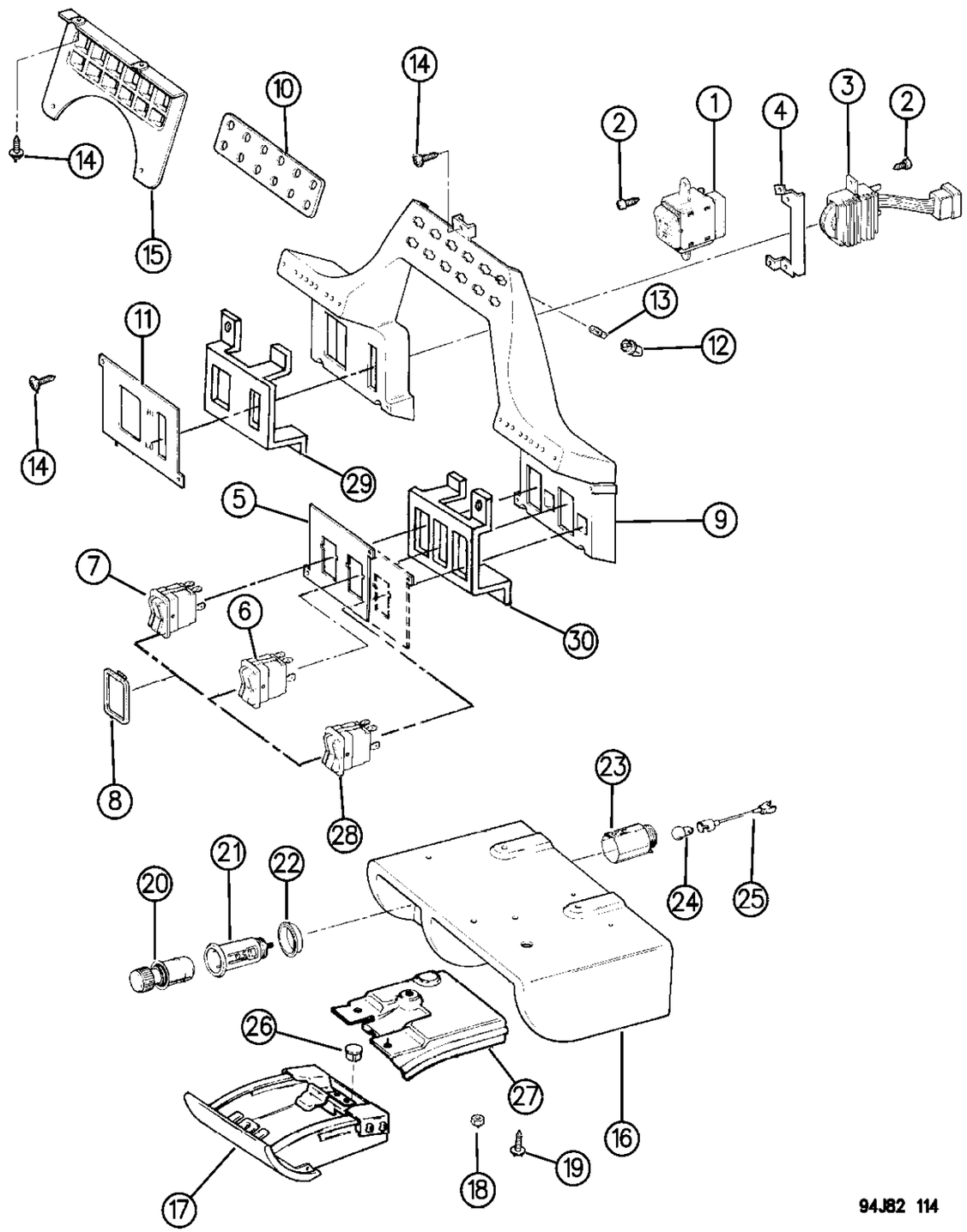

ITEM	PART NUMBER	QTY	BODY	MODEL	DESCRIPTION
1	5600 3119	1			SWITCH, Headlamp
2		6			SCREW, Not Serv.
3	5600 1864	1			RHEOSTAT
4	5501 3336	1			BRACKET
5					APPLIQUE
	5502 4780	1			3-Hole, Fog Lamps, Heated Rear Window, Rear Wiper
	5502 4782	1			2-Hole, Fog Lamps, Rear Wiper
	5502 4781	1			2-Hole, Heated Rear Window, Rear Wiper
	5502 4783	1			1-Hole, Fog Lamps
	5502 1595	1			1-Hole, Rear Wiper
	5500 8216	1			w/o Switch Openings
6	5600 6861	1			SWITCH, Defogger
7					SWITCH, Fog Lamp
	5600 3541	1			EUROPE
	5600 2384	1			w/o EUROPE
8	5500 3005	AR			COVER, Switch
9	8350 6524	1			HOUSING
10	5500 8915	1			GASKET, Switch Housing
11	5500 8217	1			LENS, H/Lamp
12	3600 0091	7			SOCKET
13	9433 184	7			BULB
14	J400 3671	6			SCREW
15					BEZEL, Warning Lamps
	5CN7 6LTB	1			Spice
	5CN7 6LXA	1			Cinder
16	5500 8354	1			HOUSING
17	5500 8351	1			ASHTRAY
18	J012 0361	1			NUT
19	J400 5796	3			SCREW
20	5600 6888	1			LIGHTER, Cigar ***
21	3747 634	1			HOUSING, Cigar Lighter
22	3500 1906	1			RING, Illumination
23	3600 0242	1			CLAMP, Cigar Lighter
24	J013 1282	1			BULB, (53)
25	3600 0279	1			SOCKET, Bulb
26	J400 0081	1			PLUG
27	5500 8352	1			GUIDE, Ash Reciever
28	5600 6733	1			SWITCH, Rear Wipe & Washer
29	5511 4624	1			HOUSING, H/Lamp Switch
30	5511 4628	1			HOUSING, Assessory Switch

MODEL CODES:

72=2 DR Wagon
74=4 DR Wagon
77=Open Body 93" Whlbase
78=Open Body 103" Whlbase - Export
T=2WD
J,N=4WD
U=4WD (RHD)

BODY STYLES:

YJ=Wrangler (4X4) "S"
Weangler (4X4) SE
Wrangler (4X4) Sahara
Wrangler (4X4) Renegade
XJ=Cherokee SE
Cherokee Sport
Cherokee Country
ZJ=Grand Cherokee SE
Grand Cherokee Laredo
Grand Cherolee Limited
ZG=Grand Cherokee European
Y1=Wrangler
X1=Cherokee
Z1=Grand Cherokee
KDX=Vehicles

AR = Use as Required - = Non Illustrated Part P.A.R. = Paint as Required

« RETURN TO GROUP INDEX

INSTRUMENT PANEL PAD AND BEZELS CHEROKEE (EXC.R.H.D.)
Figure 8A-120

8A-120

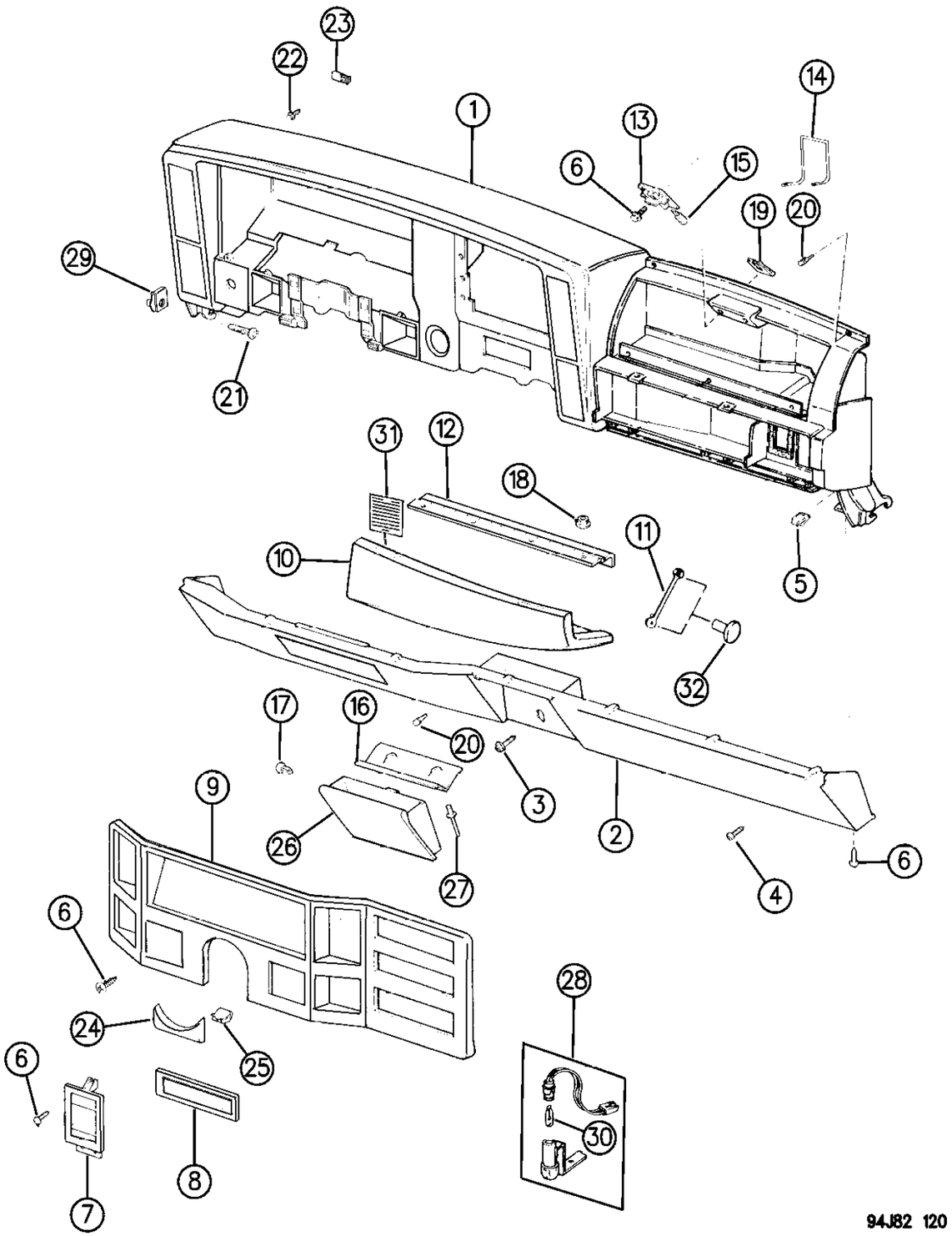

ITEM	PART NUMBER	QTY	BODY	MODEL	DESCRIPTION
1		1			PANEL, Instrument, P.A.R.
	5DF3 0MY6				1994
	5FE4 1RY6				1995-96 (Sand)
	5FE4 1RA8				1995-96 (Charcoal)
-	5BG1 8KY6	1			BEZEL ASSEMBLY, I/Panel (Right) P.A.R. ***
2		1			PANEL, Lower (P.A.R.)
	5EB9 7PY6				1994 w/o Lap Cooler
	5EY2 4SY6				1995-96
	5600 5896	1			PLUG, Lap Cooler
3	3420 1314	1			SCREW
4	J400 2465	7			SCREW
5					DNS ***
6	J400 2461	2			SCREW
7	5500 0652	1			COVER, Clock Opening
8	5500 2063	1			COVER, Radio Opening
9		1			BEZEL, Cluster
					1994
	5500 5659				Black
	5511 4931				Teak (Woodgrain)
					1995-96
	5511 5076				Black
	5511 5169				Teak (Woodgrain)
10	5BK6 4KY6	1			DOOR, Glove Box P.A.R.
-	5503 7135	1			BUMPER, Glove Box
11	5502 0572	1			CABLE, Door
12	5500 0340	1			HINGE, Glove Box
13	5500 1086	1			STRIKER, Door (Incl. Lamp)
14	5500 6506	1			RETAINER, Glove Box Door Latch
15	9421 330	1			BULB, (194)
16	5500 0359	1			RETAINER, Ashtray
17	3420 1650	2			CLIP
18	1150 2722	3			NUT
19	3420 1820	3			NUT
20	J400 0093	AR			BUMPER, Glove Box Door
21	3420 1540	4			SCREW
22	1150 3059	4			SCREW
23	3420 1519	2			NUT
24					FILLER, Steering Column
	5500 3103	1			Black
	5511 4923	1			Teak
	5511 4831	1			Woodgrain
25	3420 2502	8			CLIP

MODEL CODES:

72=2 DR Wagon
74=4 DR Wagon
77=Open Body 93" Whlbase
78=Open Body 103" Whlbase - Export
T=2WD
J,N=4WD
U=4WD (RHD)

BODY STYLES:

YJ=Wrangler (4X4) "S"
Weangler (4X4) SE
Wrangler (4X4) Sahara
Wrangler (4X4) Renegade
XJ=Cherokee SE
Cherokee Sport
Cherokee Country
ZJ=Grand Cherokee SE
Grand Cherokee Laredo
Grand Cherolee Limited
ZG=Grand Cherokee European
Y1=Wrangler
X1=Cherokee
Z1=Grand Cherokee
KDX=Vehicles

AR = Use as Required - = Non Illustrated Part P.A.R. = Paint as Required

INSTRUMENT PANEL PAD AND BEZELS CHEROKEE (EXC.R.H.D.)
Figure 8A-120

8A-120

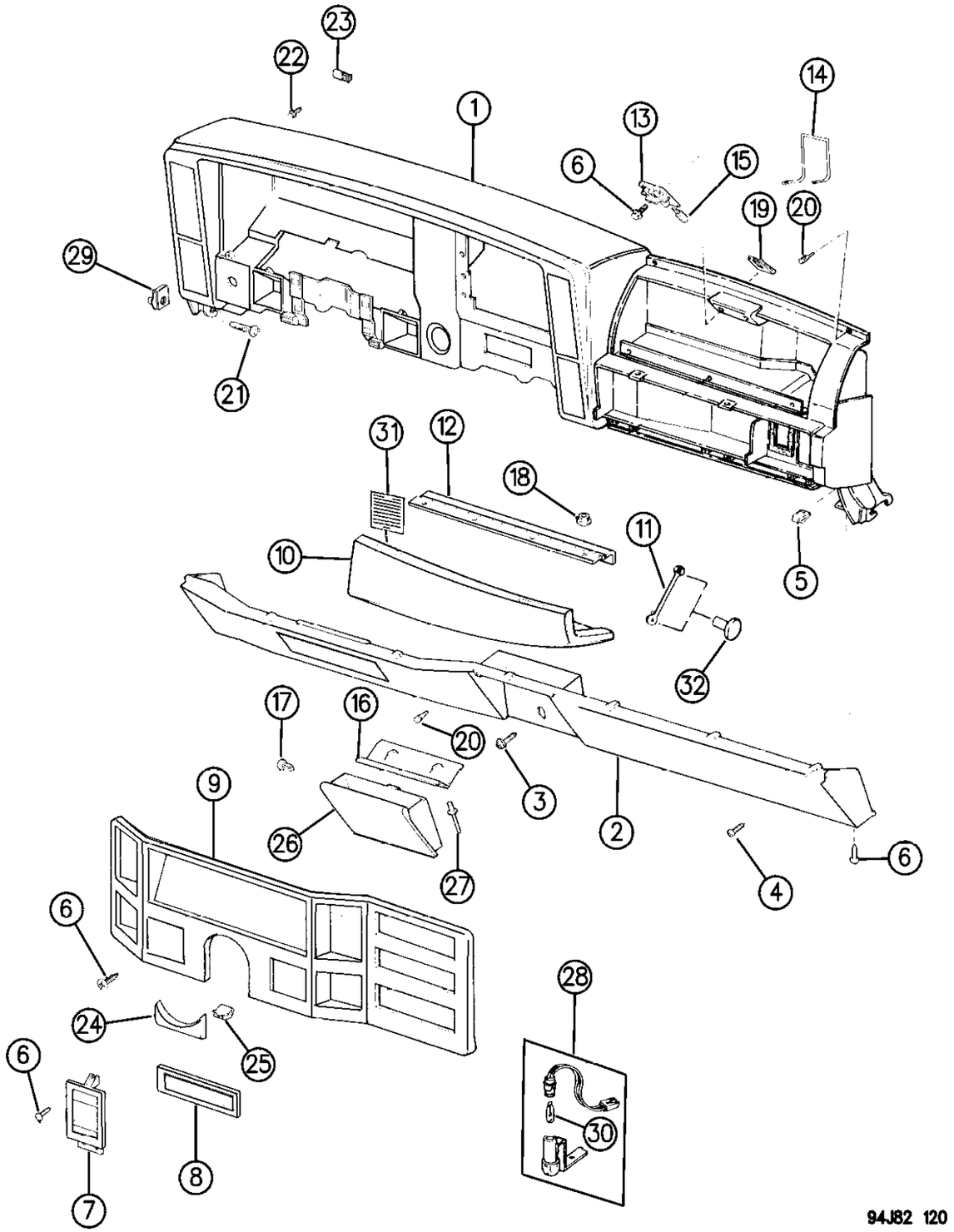

ITEM	PART NUMBER	QTY	BODY	MODEL	DESCRIPTION
26		1			ASHTRAY, P.A.R. ***
	5FF0 0SY6				1994-96
27	3420 1197	2			RIVET
28	5600 0138	1			LAMP, Ash Receiver
29	6100 040	4			NUT
30	J019 3065	1			BULB, (1815)
31	J315 7268	1			STRIKER, Lock Type Differential
32	5502 0573	2			BUTTON, Cable Retaining

MODEL CODES:

72=2 DR Wagon
74=4 DR Wagon
77=Open Body 93" Whlbase
78=Open Body 103" Whlbase - Export
T=2WD
J,N=4WD
U=4WD (RHD)

BODY STYLES:

YJ=Wrangler (4X4) "S"
Weangler (4X4) SE
Wrangler (4X4) Sahara
Wrangler (4X4) Renegade

XJ=Cherokee SE
Cherokee Sport
Cherokee Country

ZJ=Grand Cherokee SE
Grand Cherokee Laredo
Grand Cherolee Limited
ZG=Grand Cherokee European

Y1=Wrangler
X1=Cherokee
Z1=Grand Cherokee
KDX=Vehicles

AR = Use as Required - = Non Illustrated Part P.A.R. = Paint as Required

INSTRUMENT PANEL PAD AND BEZELS CHEROKEE RHD
Figure 8A-122

8A-122

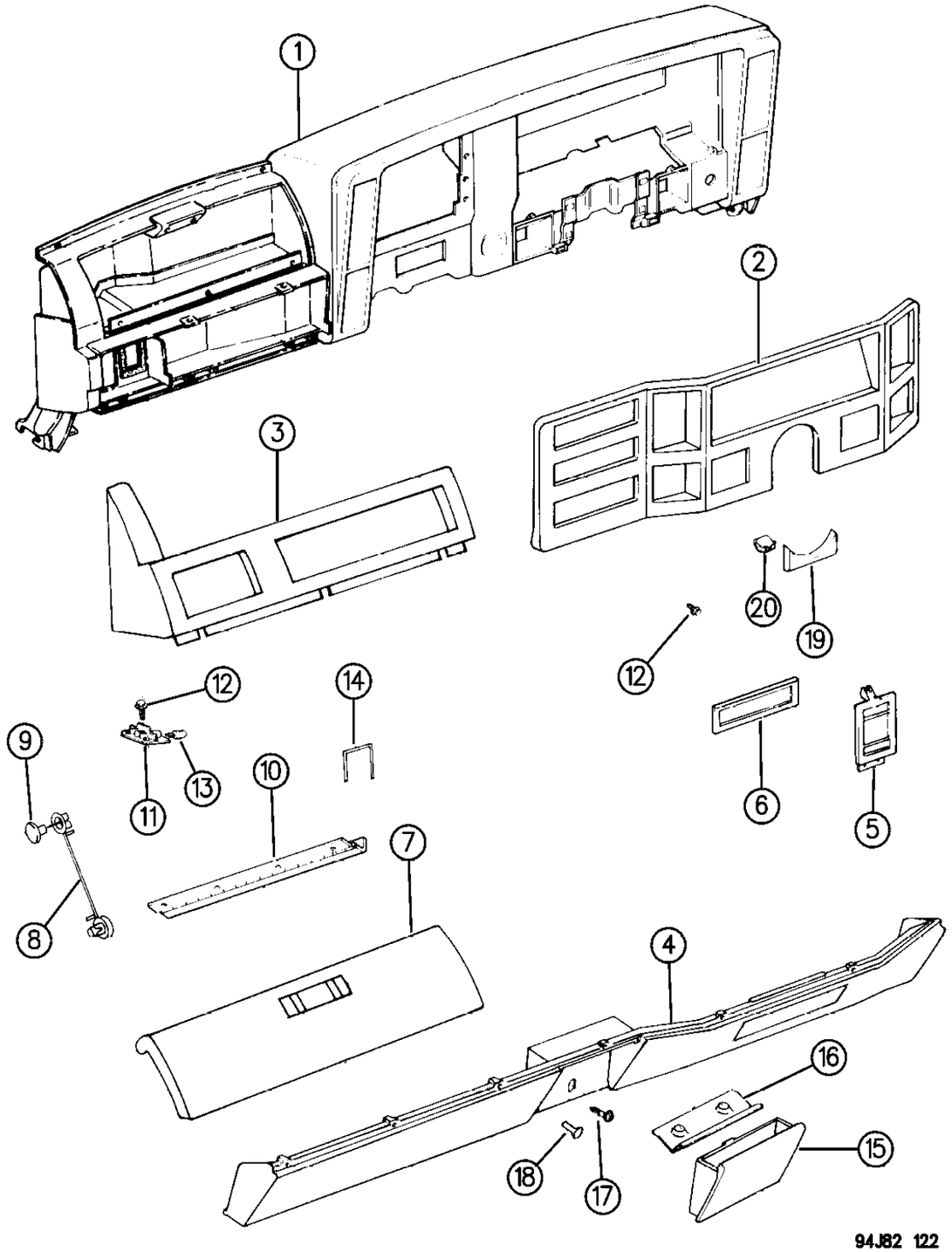

ITEM	PART NUMBER	QTY	BODY	MODEL	DESCRIPTION
1					PANEL, Instrument
	5DF5 7MA8	1			Dark Charcoal 1994
	5DF5 7MY6	1			Dark Sand 1994
	5EY1 3SY6				Sand 1995-96
	5EY1 3SA8				Charcoal 1995-96
2					BEZEL, Instrument Cluster
					1994
	5511 4843	1			Black
	5511 4574	1			Woodgrain
					1995-96
	5511 5070				Black
	5511 5072				Woodgrain
	6501 067	AR			RETAINER, Center Bezel (Grommet)
-	J400 2461	AR			SCREW
-	J400 0383	AR			NUT (U Type Spring) ***
3					BEZEL, I/Panel Left
	5BH1 1LA8				1994-95 Charcoal
	5BH1 1LH9				1994-95 Cordovan
	5BH1 1LY6	1			1994-95 Sand
					1996 (Serviced w/Instrument Panel)
4		1			PANEL, Instrument Lower Left P.A.R.
	5EY2 4SY6				1994 LHD
	5EP8 1RY6				1995-96 LHD
	5DL3 4RY6				1994-96 RHD
	5600 5896	1			PLUG, Lap Cooler
5	5500 0652	1			COVER, Clock Opening
6	5500 2063	1			COVER, Radio Opening
7	5BG8 9LA8	1			DOOR, Glove Box P.A.R.
-	5503 7135	1			BUMPER, Glove Box
8	5502 0572	1			STRAP, Check
9	5502 0573	2			BUTTON, Retaining Glove Box Door Check Strap
10	5500 0340	1			HINGE, Glove Box
11	5500 1086	1			STRICKER, Door (Incl. Lamp) ***
12	J400 2461	2			SCREW
13	9421 330	1			BULB, (194)
14	5500 6506	1			RETAINER, Glove Box Door Latch
15		1			ASHTRAY, P.A.R. ***
	5AC1 8JY6				1994-95 (Larger 1995)
	5FF0 0SY6				1995-96 (Smaller 1995)
16	5500 0359	1			RETAINER, Ashtray
17	3420 1197	2			RIVET
18	J400 0093	AR			BUMPER

MODEL CODES:

72=2 DR Wagon
74=4 DR Wagon
77=Open Body 93" Whlbase
78=Open Body 103" Whlbase - Export
T=2WD
J,N=4WD
U=4WD (RHD)

BODY STYLES:

YJ=Wrangler (4X4) "S"
Weangler (4X4) SE
Wrangler (4X4) Sahara
Wrangler (4X4) Renegade
XJ=Cherokee SE
Cherokee Sport
Cherokee Country
ZJ=Grand Cherokee SE
Grand Cherokee Laredo
Grand Cherolee Limited
ZG=Grand Cherokee European
Y1=Wrangler
X1=Cherokee
Z1=Grand Cherokee
KDX=Vehicles

AR = Use as Required - = Non Illustrated Part P.A.R. = Paint as Required

INSTRUMENT PANEL PAD AND BEZELS CHEROKEE RHD
Figure 8A-122

8A-122

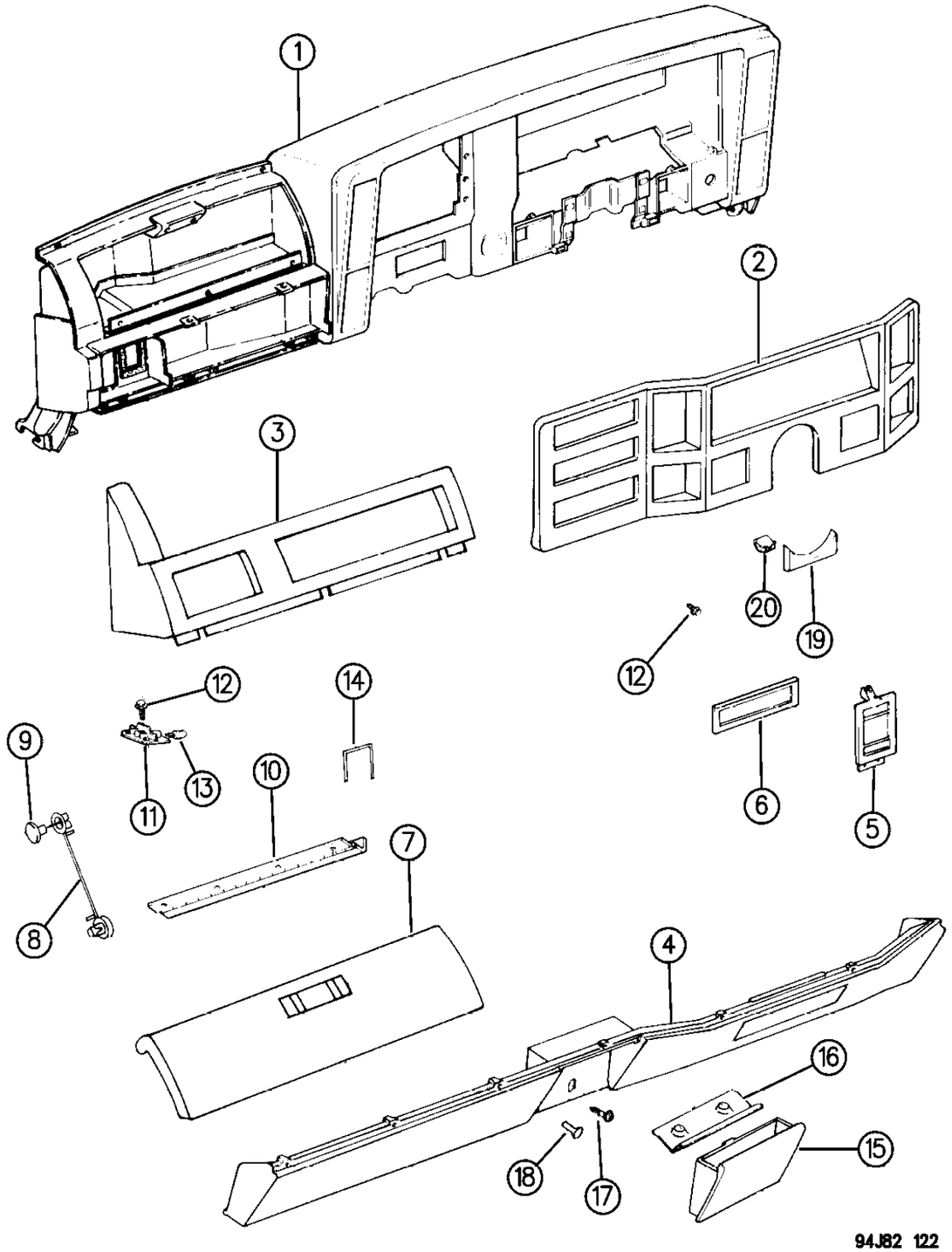

ITEM	PART NUMBER	QTY	BODY	MODEL	DESCRIPTION
19					FILLER, Steering Column
	5511 4847	1			Black
	5511 4831	1			Woodgrain
20	3420 2502	8			CLIP, "U" Type
-	5534 5870	1			BRACKET, Wire Harness Mounting To Dash Panel

MODEL CODES:

72=2 DR Wagon
74=4 DR Wagon
77=Open Body 93" Whlbase
78=Open Body 103" Whlbase - Export
T=2WD
J,N=4WD
U=4WD (RHD)

BODY STYLES:

YJ=Wrangler (4X4) "S"
Weangler (4X4) SE
Wrangler (4X4) Sahara
Wrangler (4X4) Renegade
XJ=Cherokee SE
Cherokee Sport
Cherokee Country
ZJ=Grand Cherokee SE
Grand Cherokee Laredo
Grand Cherolee Limited
ZG=Grand Cherokee European
Y1=Wrangler
X1=Cherokee
Z1=Grand Cherokee
KDX=Vehicles

AR = Use as Required - = Non Illustrated Part P.A.R. = Paint as Required

INSTRUMENT PANEL SWITCHES AND CIGAR LIGHTER CHEROKEE
Figure 8A-124

8A-124

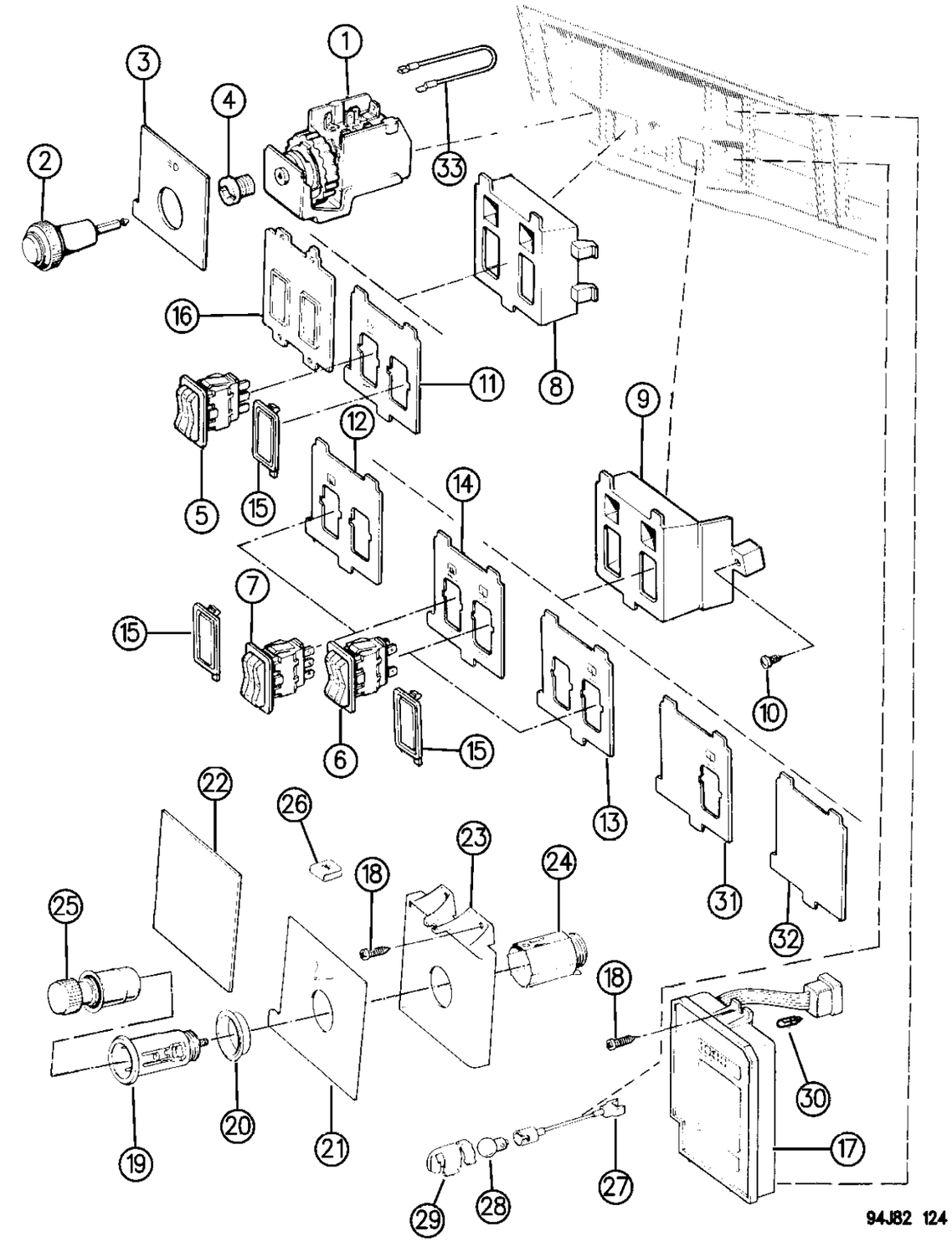

ITEM	PART NUMBER	QTY	BODY	MODEL	DESCRIPTION
1	5600 7334	1			SWITCH, Headlmp
2					KNOB, Headlamp
	5600 6885	1			EUROPE, MIDEAST and KDX
	5600 6886	1			U.S., CANADA, RHD
3					COVER, Headlamp Switch
	5500 4522	1			EUROPE, MIDEAST, KDX
	5600 0492	1			U.S., CANADA
	5502 8569	1			RHD
4	J364 6513	1			NUT
5					SWITCH
	5600 0025	1			Fog Lamp
	5600 0025	1			Idle
	5600 0025	1			Trans. Comfort
6	5600 0029	1			SWITCH, Rear Wiper
7	5600 6859	1			SWITCH, Defogger
8	5500 1893	1			HOUSING, Switch, Left
	5511 4569	1			RHD
9	5500 1892	1			HOUSING, Switch, Right
	5511 4568	1			RHD
10	J400 2461	2			SCREW
11					LENS, Identification
	5600 0494	1			Fog Lamp
	5511 4700	1			Rear Fog Lamp
12					LENS, Identification
	5511 4881	1			Fog/Defogger, EUROPE
	5511 4883	1			Fog/Defogger, U.S., CANADA
	5511 4883	1			Fog/Defogger
	5511 4882	1			Heated Rear Window
	5600 2132	1			Trans.
	5511 4956	1			Idle
13					LENS, Identification
	5600 2132	1			Trans. Mode
	5600 2131	1			Trans. Mode/Rear Wiper
	5511 5094	1			Idle/Wiper
	5511 4956	1			Idle
14					LENS, Identification
	5600 0495	1			1-Hole, Rear Wiper, KDX
15	5500 3005	2			PLATE, Switch
16	5500 2810	AR			COVER, Switch
17					CLOCK
	5600 6862	1			EUROPE, MIDEAST, KDX
	5511 4637	1			Cover RHD

MODEL CODES:

72=2 DR Wagon
74=4 DR Wagon
77=Open Body 93" Whlbase
78=Open Body 103" Whlbase - Export
T=2WD
J,N=4WD
U=4WD (RHD)

BODY STYLES:

YJ=Wrangler (4X4) "S"
Weangler (4X4) SE
Wrangler (4X4) Sahara
Wrangler (4X4) Renegade
XJ=Cherokee SE
Cherokee Sport
Cherokee Country
ZJ=Grand Cherokee SE
Grand Cherokee Laredo
Grand Cherolee Limited
ZG=Grand Cherokee European
Y1=Wrangler
X1=Cherokee
Z1=Grand Cherokee
KDX=Vehicles

AR = Use as Required - = Non Illustrated Part P.A.R. = Paint as Required

INSTRUMENT PANEL SWITCHES AND CIGAR LIGHTER CHEROKEE
Figure 8A-124

8A-124

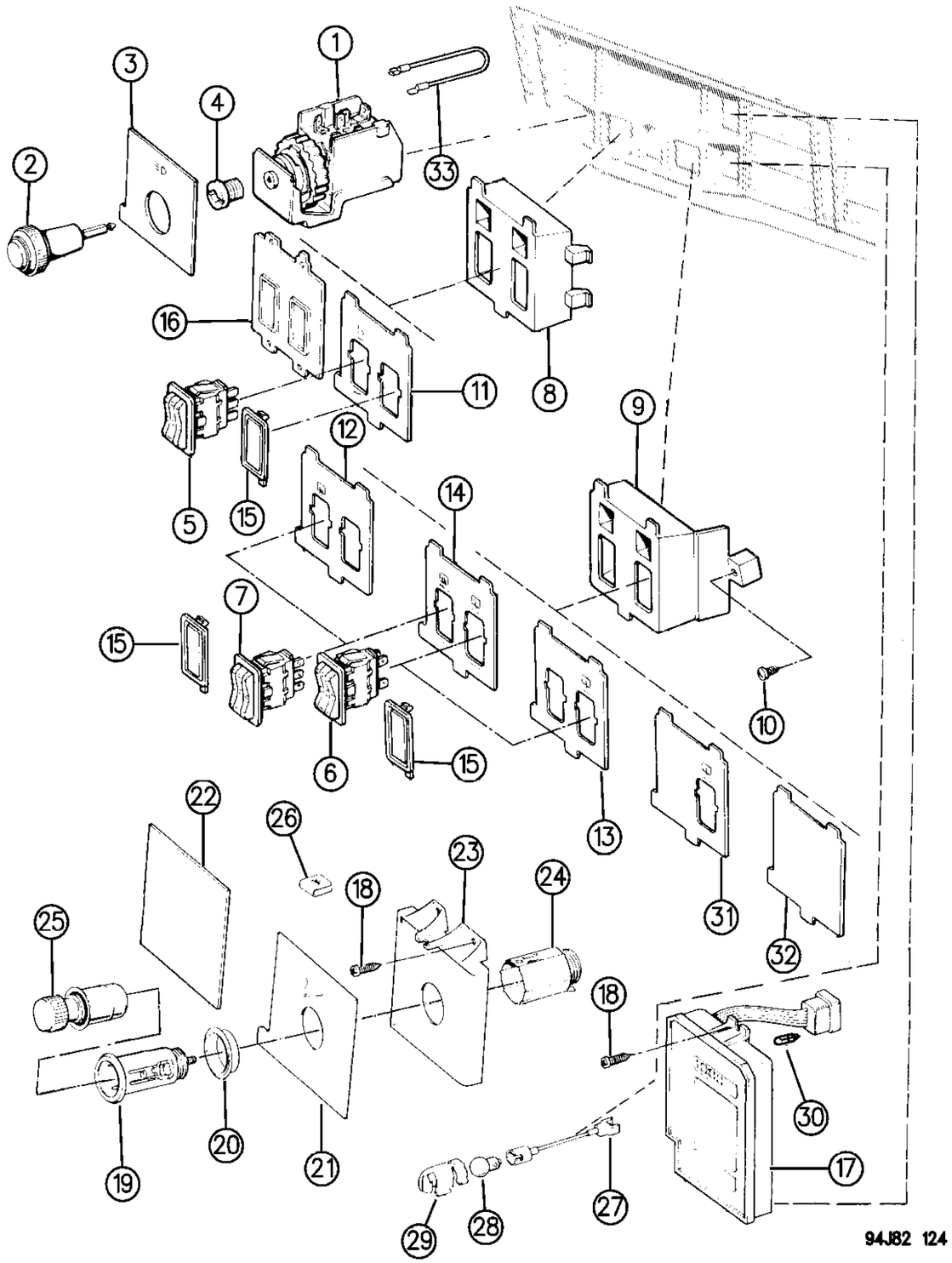

ITEM	PART NUMBER	QTY	BODY	MODEL	DESCRIPTION
18	J400 2461	4			SCREW
19	3747 634	1			HOUSING, Cigar Lighter
20	3500 1906	1			LIGHT RING, Cigar Lighter ***
21	5600 0490	1			COVER
22	5600 0058	1			COVER
23	5500 2664	1			BRACKET, Cigar Lighter
	5511 4567	1			RHD
24	3600 0242	1			CLAMP, Cigar Lighter
25	5600 6888	1			LIGHTER, Cigar ***
26	J400 4223	2			NUT
27	3600 0279	1			SOCKET
28	0131 282	1			BULB (53) ***
29	5600 5742	1			SHIELD, Bulb
30	9433 184	1			BULB (74) ***
31	5600 0495	1			LENS, Wiper Identification, KDX
32	5500 2810	AR			LENS, Blank
33	5600 6975	1			GROUND, Jumper Headlamp Switch ***

MODEL CODES:

72=2 DR Wagon
74=4 DR Wagon
77=Open Body 93" Whlbase
78=Open Body 103" Whlbase - Export
T=2WD
J,N=4WD
U=4WD (RHD)

BODY STYLES:

YJ=Wrangler (4X4) "S"
Weangler (4X4) SE
Wrangler (4X4) Sahara
Wrangler (4X4) Renegade

XJ=Cherokee SE
Cherokee Sport
Cherokee Country

ZJ=Grand Cherokee SE
Grand Cherokee Laredo
Grand Cherolee Limited
ZG=Grand Cherokee European

Y1=Wrangler
X1=Cherokee
Z1=Grand Cherokee
KDX=Vehicles

AR = Use as Required - = Non Illustrated Part P.A.R. = Paint as Required

INSTRUMENT PANEL 1994-95 GRAND CHEROKEE
Figure 8A-130

8A-130

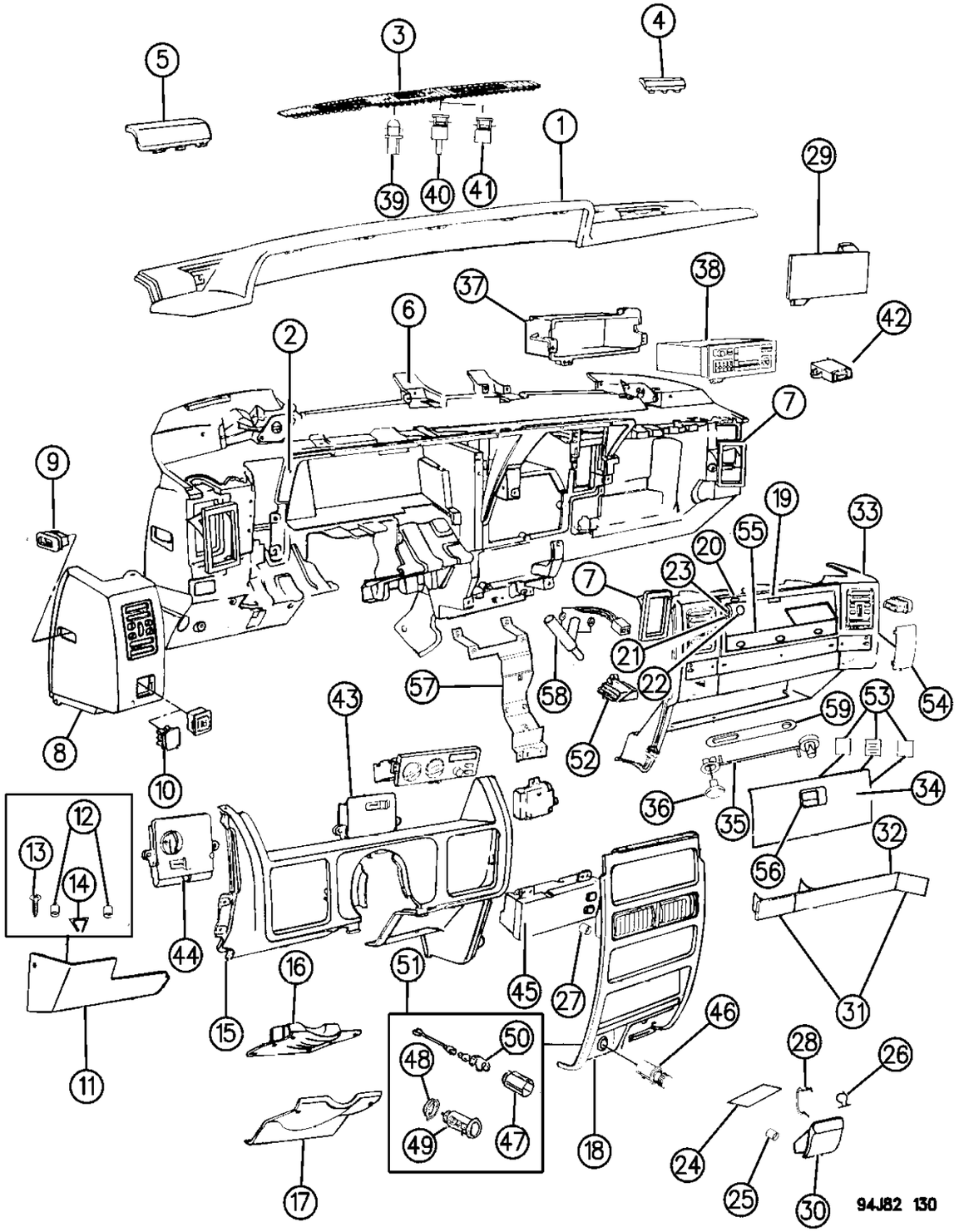

ITEM	PART NUMBER	QTY	BODY	MODEL	DESCRIPTION
1					Pad Assembly, Instrument Panel Upper ***
					1994-95
	5EJ7 8RD5	1			Medium Quartz
	5EJ7 8RF8	1			Dark Driftwood
	5EJ7 8RV8	1			Mediun Champagne
	5DT3 4SAZ	1			Agate
	5DT3 4SC8	1			Dark Cirrus Gray
	5EC5 8SAZ	1			Agate
	6502 067	AR			CLIP, Panel Att.
2		1			BEZEL, Cluster Upper
	5511 5319				1994
	5511 5614				1995
3		1			GRILLE, Defroster Cowl Top P.A.R.
	5511 5046				1994-1995
4					GRILLE, Speaker Right
	5AR5 0LD5	1			Quartz
	5AR5 0LF8	1			Dark Driftwood
	5AR5 0MV8	1			Medium Champagne
5					GRILLE, Speaker Left
	5AR4 1LD5	1			Quartz
	5AR4 1LF8	1			Dark Driftwood
	5AR4 1MV8	1			Medium Champagne
6		1			ARMATURE ***
	5511 5137				1994
	5511 5655				1995
7					SEAL, Armature
	5511 4666	1			Right
	5511 5063	1			Center
	5511 4667	1			Left
8					BEZEL ASSEMBLY, Air Outlet, Left ***
					Contains Bezel, Housing and Barrel
	5DF2 1LD5	1			Medium Quartz
	5DF2 1LF8	1			Dark Driftwood
	5DF2 1MV4	1			Light Champagne
9	5503 0275	2			SEAL
10					COVER, Mirror Switch
	5AU5 0LD5	1			Medium quartz
	5AU5 0LF8	1			Dark Driftwood
	5AU5 0PV4	1			Light Champagne
11	5DK9 3MD5	1			PANEL, Lower P.A.R.
12	4372 887	4			BUMPER, Panel Lower
13	6032 719	7			NUT, Armature

MODEL CODES:

72=2 DR Wagon
74=4 DR Wagon
77=Open Body 93" Whlbase
78=Open Body 103" Whlbase - Export
T=2WD
J,N=4WD
U=4WD (RHD)

BODY STYLES:

YJ=Wrangler (4X4) "S"
Weangler (4X4) SE
Wrangler (4X4) Sahara
Wrangler (4X4) Renegade

XJ=Cherokee SE
Cherokee Sport
Cherokee Country

ZJ=Grand Cherokee SE
Grand Cherokee Laredo
Grand Cherolee Limited
ZG=Grand Cherokee European

Y1=Wrangler
X1=Cherokee
Z1=Grand Cherokee
KDX=Vehicles

AR = Use as Required - = Non Illustrated Part P.A.R. = Paint as Required

INSTRUMENT PANEL 1994-95 GRAND CHEROKEE
Figure 8A-130

8A-130

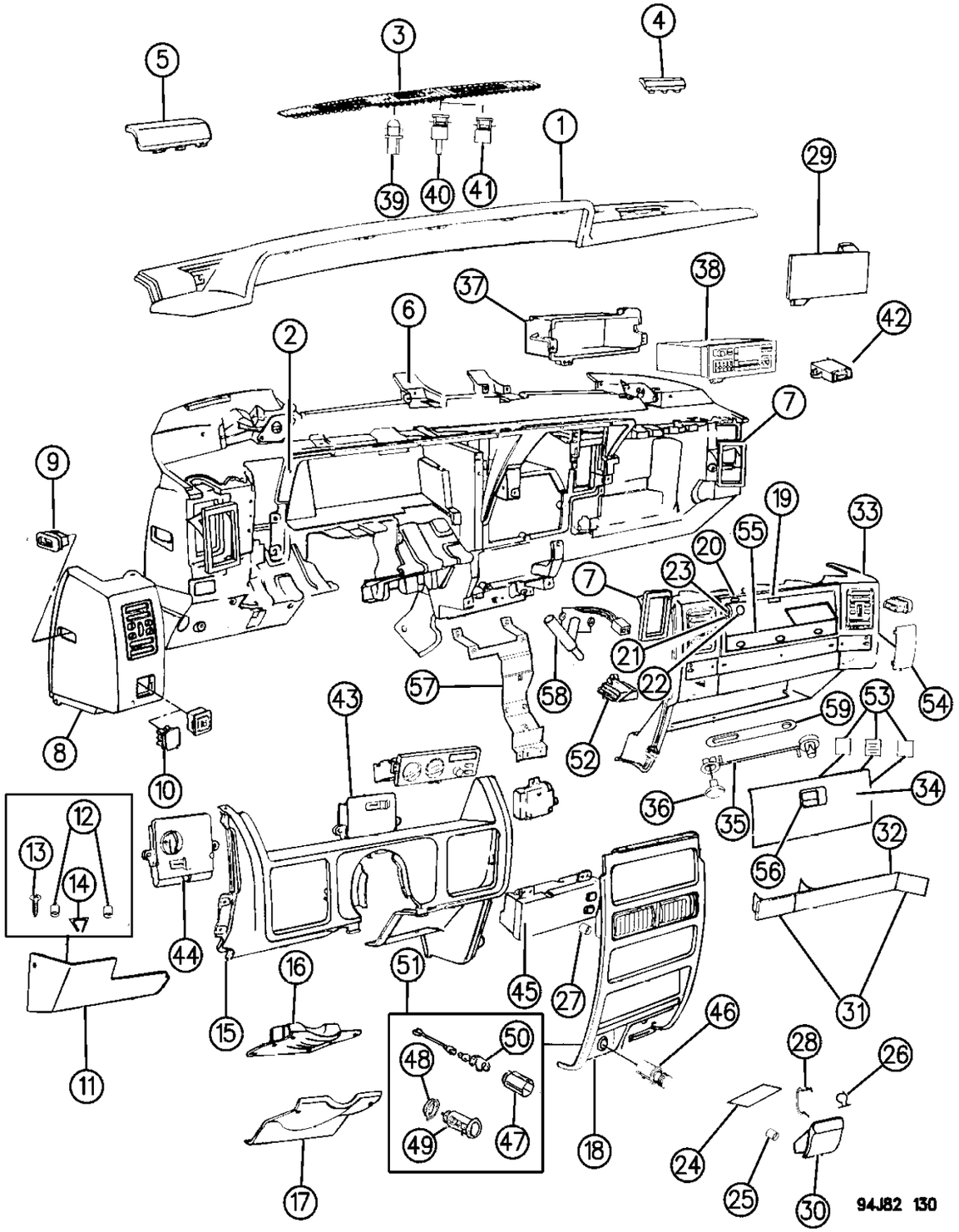

ITEM	PART NUMBER	QTY	BODY	MODEL	DESCRIPTION
14	6501 636	2			CLIP, Panel Lower
15	5DB7 8LD5	1			BEZEL, Cluster Lower
16	5511 5206	1			PLATE, Steering Column Cover
17		1			COVER, Steering Column (P.A.R.)
	5CP1 8LD5				1994-95
18					BEZEL, Instrument Panel Center
	4746 848	1			Black (1994-95)
	4746 849	1			Autumn Teak (1994-95)
	5503 0270	1			BOX, Storage
19	5503 0278	1			STRIKER
20	4524 343	2			BUMPER, Glove Box Door
21	3600 3404	1			LENS
22	4565 022	1			SWITCH, w/Lamp, Glove Box Door
23	5511 4571	1			COVER, Glove Box Lamp Hole
24	5502 8828	1			SHIELD
25	J400 0093	2			BUMPER, Ash Tray Stop
26	4460 238	1			LAMP
27	4372 887	10			BUMPER, Center Bezel
28	5503 3543	1			SPRING, Ash Cup
29	5503 0332	1			PLATE, w/o Radio
30		1			ASHTRAY, Instrument Panel ***
	5502 8830				1994-95
	5511 5121				1996
31					MOULDING, Glove Box
	5511 5048-9	1			Black
	5511 5050-1	1			Autumn Teak
32					NAMEPLATE, Glove Box
	5511 5052	1			Black
	5511 5053	1			Autumn Teak
33	5CU2 2LD5	1			BEZEL, Glove box
34		1			DOOR, Glove Box
	5DL2 0PD5	1			LHD
35	5511 4664	1			STRAP, Check
36					Not Serviced ***
37	5502 8862	1			HOUSING, Radio Mounting
38	5269 429	1			RADIO, Ultimate Cassette
					Knobs
	4762 172	AR			Volume, CD Player
	4762 174	AR			Equalizer
	4762 176	AR			Joy Stick
	4728 580	1			Package: Consists of (4728152, 4728153 two each) ***
39	5503 5501	1			SENSOR, Solar w/Auto Temp. Control

MODEL CODES:

72=2 DR Wagon
74=4 DR Wagon
77=Open Body 93" Whlbase
78=Open Body 103" Whlbase - Export
T=2WD
J,N=4WD
U=4WD (RHD)

BODY STYLES:

YJ=Wrangler (4X4) "S"
Weangler (4X4) SE
Wrangler (4X4) Sahara
Wrangler (4X4) Renegade
XJ=Cherokee SE
Cherokee Sport
Cherokee Country
ZJ=Grand Cherokee SE
Grand Cherokee Laredo
Grand Cherolee Limited
ZG=Grand Cherokee European
Y1=Wrangler
X1=Cherokee
Z1=Grand Cherokee
KDX=Vehicles

AR = Use as Required - = Non Illustrated Part P.A.R. = Paint as Required

INSTRUMENT PANEL 1994-95 GRAND CHEROKEE
Figure 8A-130

8A-130

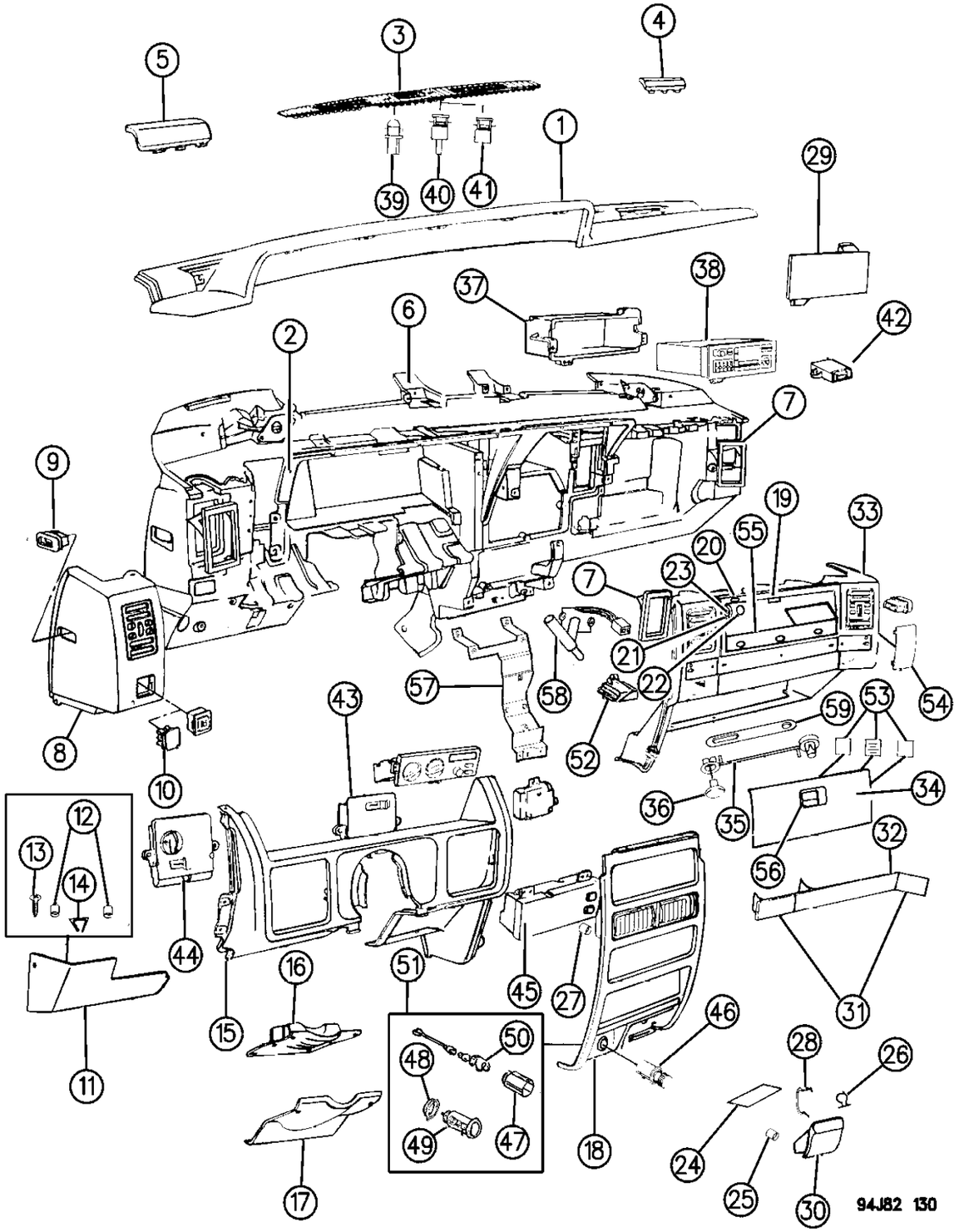

ITEM	PART NUMBER	QTY	BODY	MODEL	DESCRIPTION
40	5511 4622	1			PLUG, w/Air Conditioning
41		1			SENSOR, w/Twilight Sentinal
	5600 5995				1994-95
	5600 8759				1996
42	5600 6184	1			MODULE, Instrument Panel Lamp Dimming
43					SWITCH, Pod Right
					1994-95
	5600 4978	1			w/o Heated Rear Window, w/Rear Wipe & Wash
	5600 5316	1			w/Heated Rear Window, w/Rear Wipe & Wash
	5600 5314	1			O/Drive Lockout, w/Rear Wiper
	5600 5318	1			O/Drive Lockout, w/Heated Rear Window & Rear Wiper
	4713 798	1			Bulb, Pod Right
44					SWITCH, Pod Left
					1994-95
	5600 4965	1			w/Twilight Sentinal, & Fog Lamps
	5600 4959	1			w/o Twilight Sentinal, w/o Fog Lamps
	4713 796	1			Bulb, Pod Left
	5600 4963	1			w/Twilight Sentinal, w/o Fog Lamps
	5600 4961	1			w/o Twilight Sentinal, w/Fog Lamps
	4713 797	1			Bulb, Pod Left
45		1			MODULE ASSEMBLY, Vehicle Monitor
	5600 7088				Up to 8/30/93
	5600 7500				After 8/30/93
	5600 7142	1			1994-95 Graphics and Telltale
	5600 7350	1			1996 GRAPHICS AND TELLTALE
	4762 965	1			LENS, Graphics Display
	4720 994	1			BOARD, Printed Circuit Graphics Display
46	5600 5738	1			KNOB, w/Element, Cigar Lighter
47	5600 5739	1			CLAMP, Cigar Lighter
48	5600 5740	1			RING, Cigar Lighter
49	5600 5741	1			HOUSING, Cigar Lighter
50	5600 5742	1			SHIELD, Cigar Lighter
51	5600 5782	1			HOUSING, Lighter Assembly
52	5600 5996	1			MODULE, Twilight Sentinal
53	4460 923	1			DECAL, Air Bag
54	5AW4 0LD5	1			PANEL, Fuse Box Access
55	5AW3 8LD5	1			PANEL, Relay Access
56		1			LATCH, Glove Box Door
	5DL1 5PD5				Medium Quartz
	5DL1 5PF8				Dark Driftwood
	5DL1 5PV4				Light Champange
57	5503 0290	1			REINFORCEMENT

MODEL CODES:

72=2 DR Wagon
74=4 DR Wagon
77=Open Body 93" Whlbase
78=Open Body 103" Whlbase - Export
T=2WD
J,N=4WD
U=4WD (RHD)

BODY STYLES:

YJ=Wrangler (4X4) "S"
Weangler (4X4) SE
Wrangler (4X4) Sahara
Wrangler (4X4) Renegade
XJ=Cherokee SE
Cherokee Sport
Cherokee Country
ZJ=Grand Cherokee SE
Grand Cherokee Laredo
Grand Cherolee Limited
ZG=Grand Cherokee European
Y1=Wrangler
X1=Cherokee
Z1=Grand Cherokee
KDX=Vehicles

AR = Use as Required - = Non Illustrated Part P.A.R. = Paint as Required

INSTRUMENT PANEL 1994-95 GRAND CHEROKEE
Figure 8A-130

8A-130

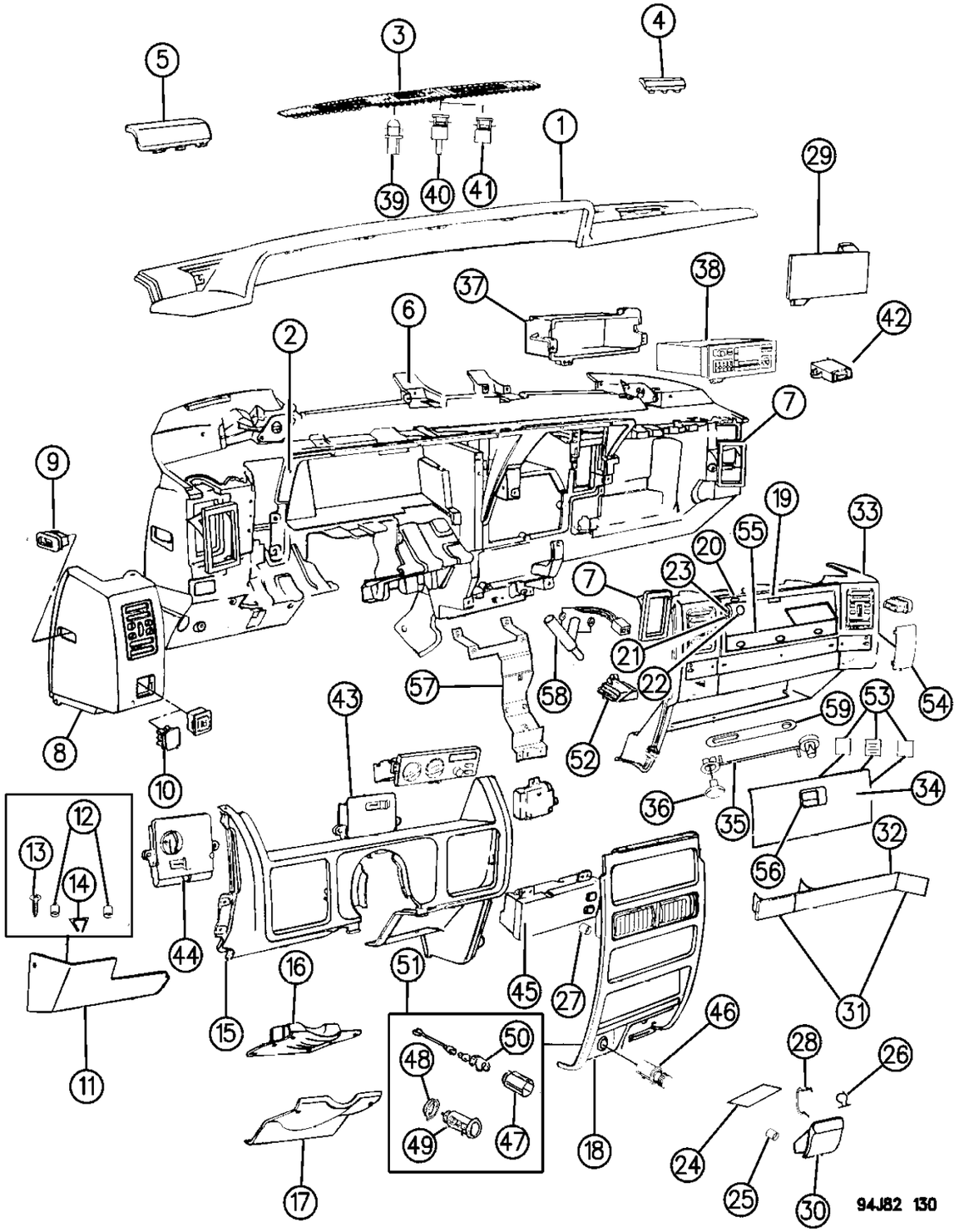

ITEM	PART NUMBER	QTY	BODY	MODEL	DESCRIPTION
58	5600 5557	1			SENSOR, Ambient Temp. (In Car)
59	5511 4664	1			STRAP, Dampener Check

MODEL CODES:

72=2 DR Wagon
74=4 DR Wagon
77=Open Body 93" Whlbase
78=Open Body 103" Whlbase - Export
T=2WD
J,N=4WD
U=4WD (RHD)

BODY STYLES:

YJ=Wrangler (4X4) "S"
Weangler (4X4) SE
Wrangler (4X4) Sahara
Wrangler (4X4) Renegade
XJ=Cherokee SE
Cherokee Sport
Cherokee Country
ZJ=Grand Cherokee SE
Grand Cherokee Laredo
Grand Cherolee Limited
ZG=Grand Cherokee European
Y1=Wrangler
X1=Cherokee
Z1=Grand Cherokee
KDX=Vehicles

AR = Use as Required - = Non Illustrated Part P.A.R. = Paint as Required

INSTRUMENT PANEL 1996 GRAND CHEROKEE
Figure 8A-135

8A-135A

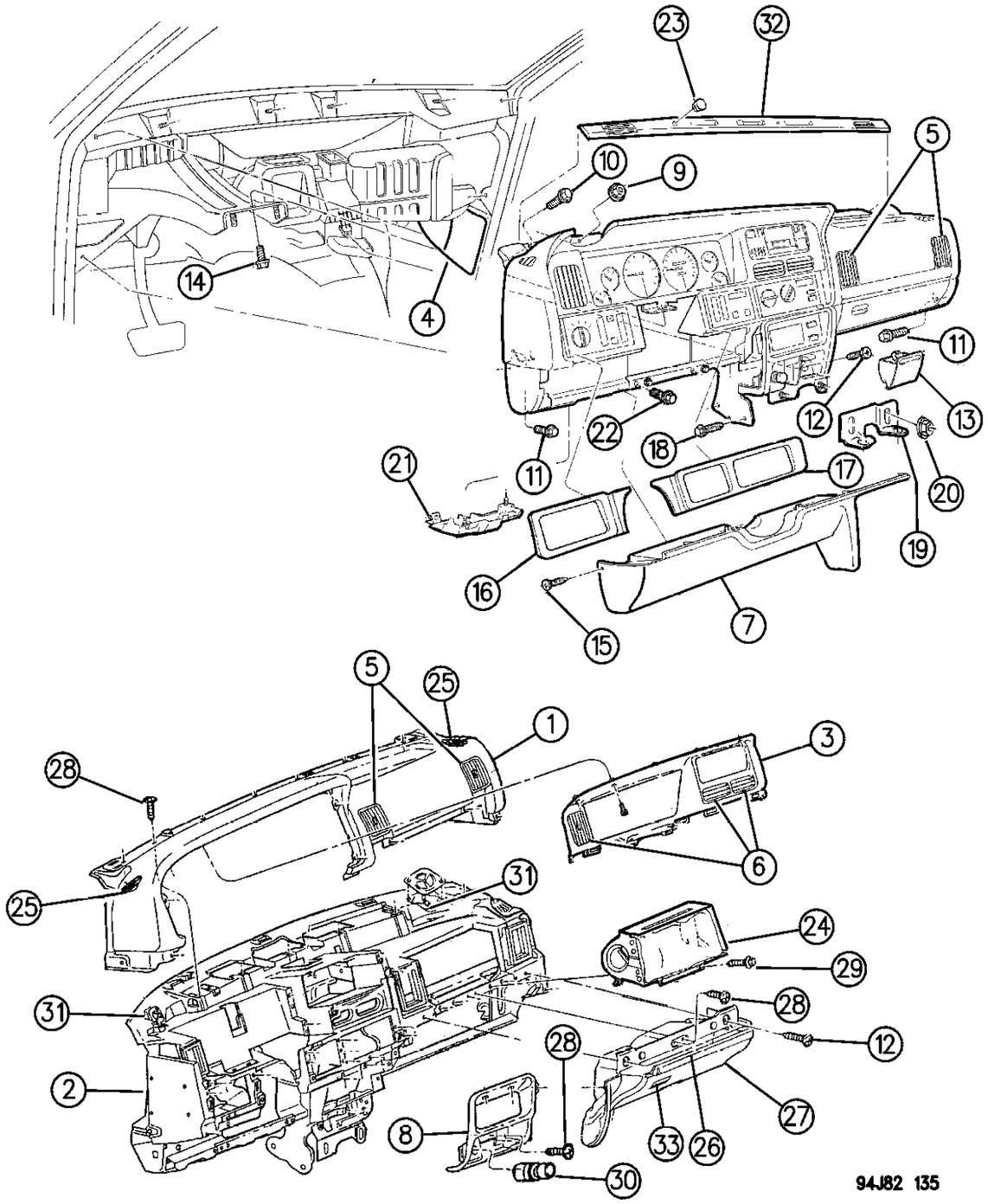

ITEM	PART NUMBER	QTY	BODY	MODEL	DESCRIPTION
1					Pad Assembly, Instrument Panel Upper P.A.R. ***
					LHD
	5DT3 4SAZ				Agate
	5DT3 4SC8				Gray
					RHD
	5EC5 8SAZ	1			Agate
2		1			ARMATURE ASSEMBLY ***
	5511 5109	1			LHD
	5535 6653	1			RHD
-		1			BRACKET, Passenger Air Bag Mounting
	4732 089	1			LHD
	5535 6764	1			RHD
3		1			BEZEL, Cluster Upper
	5511 5119	1			LHD
	5535 6690	1			RHD
4		1			PANEL ASSEMBLY, Fuse Access Door ***
	5FF7 9SAZ				Agate
	5FF7 9SC3				Gray
	5FF7 9ST6				Spice/Saddle
5		AR			OUTLET ASSEMBLY, Right ***
	5DT3 5SAZ				Agate
	5DT3 5SC8				Dark Gray
6		1			OUTLET ASSEMBLY, Left (Serviced in Cluster Bezel Assembly) ***
7					COVER, Steering Column P.A.R.
	5DT3 6SC8	1			LHD
	5EC5 9SC8	1			RHD
8					BEZEL, Instrument Panel Center (Black) Included Power Outlet Assembly
	5535 6620	1			RHD
	5511 5113	1			LHD
-	5600 6927	1			OUTLET ASSEMBLY, Power ***
-	5511 5322	1			DOOR, I/P Power Outer Center Bezel
-	5511 5665	4			BUMPER
-	J400 0093	2			BUMPER
-	5535 5605	1	ZG		INSULATION ASSEMBLY, Dash Complete ***
	5535 5604	1	ZG		INSULATION ASSEMBLY, Dash Panel Outer ***
9	6502 843	4			NUT
10		2			SCREW & WASHER ASSEMBLY (Not Serviced) ***
11	6502 925	2			SCREW & WASHER ASSEMBLY ***
12	J400 3671	AR			SCREW
13	5511 5121	1			ASH RECEIVER ASSEMBLY ***
14	6101 786	AR			SCREW

MODEL CODES:

72=2 DR Wagon
74=4 DR Wagon
77=Open Body 93" Whlbase
78=Open Body 103" Whlbase - Export
T=2WD
J,N=4WD
U=4WD (RHD)

BODY STYLES:

YJ=Wrangler (4X4) "S"
Weangler (4X4) SE
Wrangler (4X4) Sahara
Wrangler (4X4) Renegade
XJ=Cherokee SE
Cherokee Sport
Cherokee Country
ZJ=Grand Cherokee SE
Grand Cherokee Laredo
Grand Cherolee Limited
ZG=Grand Cherokee European
Y1=Wrangler
X1=Cherokee
Z1=Grand Cherokee
KDX=Vehicles

AR = Use as Required - = Non Illustrated Part P.A.R. = Paint as Required

INSTRUMENT PANEL 1996 GRAND CHEROKEE
Figure 8A-135

8A-135A

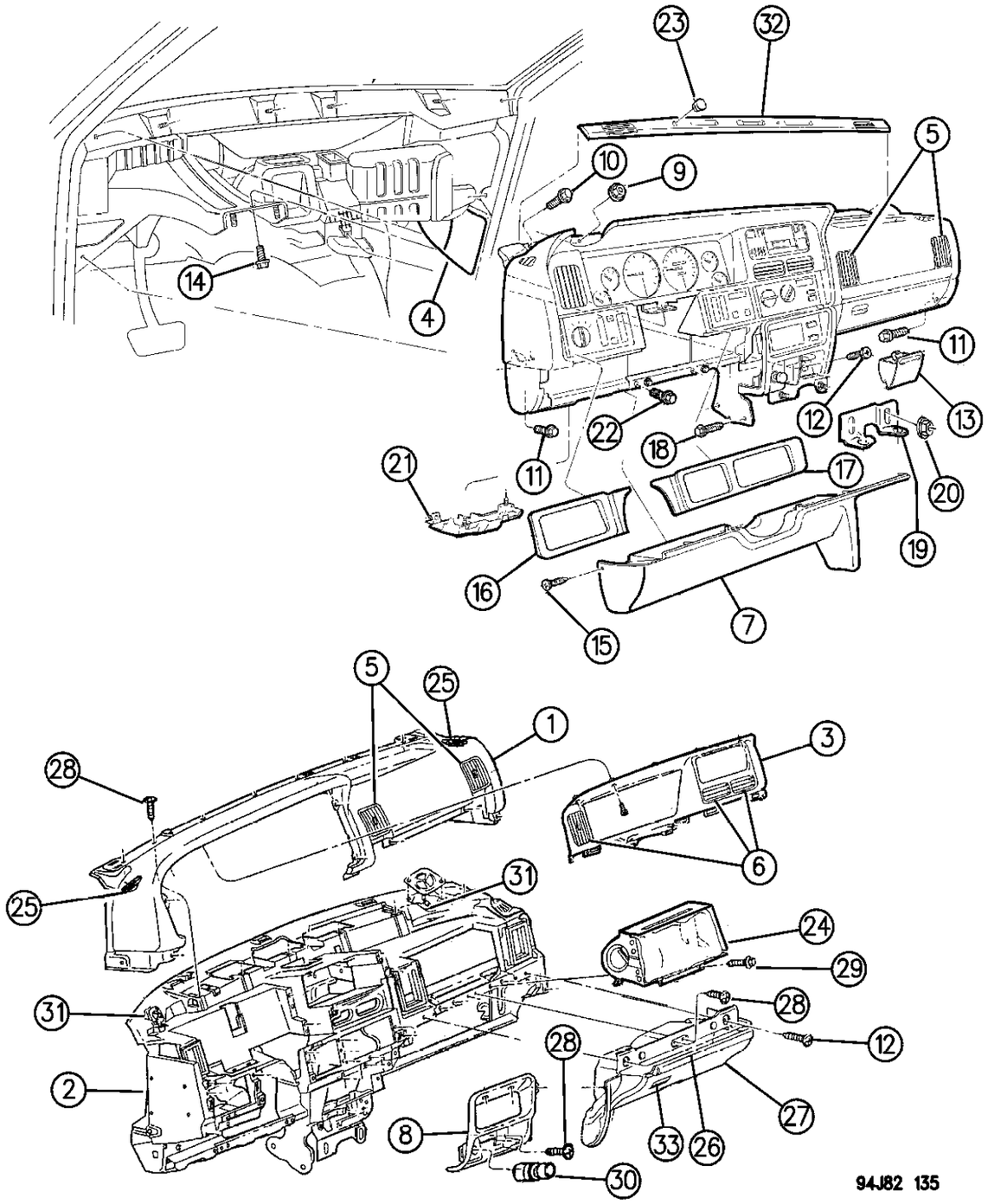

ITEM	PART NUMBER	QTY	BODY	MODEL	DESCRIPTION
15	6032 723	7			SCREW
16		1			BEZEL ASSEMBLY, POD ***
	5511 5117	1			LHD
	5535 6625	1			RHD
17		1			BEZEL ASSEMBLY, POD ***
	5511 5116	1			LHD
	5535 6624	1			RHD
	6034 319				CLIPS, Bezel ***
18		4			SCREW & WASHER (Do Not Serviced) M8x1.25x2500 ***
19	5511 5994	1			BRACKET
20	6100 050	2			NUT & WASHER ***
21	5511 5963	1			COVER ASSEMBLY, Wiring ***
22	6101 786	2			SCREW
23					Ultra Light Sensor
	5EL1 1SAZ				Agate
	5EL1 1SC8				Dark Gray
					Solar Sensor
	5DX7 7SAZ				Agate
24	5531 4704	1			MODULE, Passenger Air Bag
	5DX7 7SC8				Dark Gray
-	5600 8759	1			SENSOR, Ultra (Security)
25					GRILLE, Instrument Panel Demister P.A.R.
					Right
	5DS1 8SC8	1			LHD
	5EC5 6SAZ	1			RHD
					Left
	5DS1 9SC8	1			LHD
	5EC5 7SAZ	1			RHD
26					MOLDING ASSEMBLY. Glove Box Door ***
	5511 5123	1			LHD
	5535 6660	1			RHD
27		1			DOOR ASSEMBLY, Glove Box
					LHD
	5DW8 4SAZ				Agate
	5DW8 4SC8				Gray
					RHD
	5EC2 7SAZ	1			Agate
-		1			BEZEL, Glove Box P.A.R.
	KK41 SC8	1			LHD
	5EK6 0SAZ	1			RHD
-	5511 5327	1			STRIKER
-	4524 343	2			BUMPER, Glove Box Door

MODEL CODES:

72=2 DR Wagon
74=4 DR Wagon
77=Open Body 93" Whlbase
78=Open Body 103" Whlbase - Export
T=2WD
J,N=4WD
U=4WD (RHD)

BODY STYLES:

YJ=Wrangler (4X4) "S"
Weangler (4X4) SE
Wrangler (4X4) Sahara
Wrangler (4X4) Renegade
XJ=Cherokee SE
Cherokee Sport
Cherokee Country
ZJ=Grand Cherokee SE
Grand Cherokee Laredo
Grand Cherolee Limited
ZG=Grand Cherokee European
Y1=Wrangler
X1=Cherokee
Z1=Grand Cherokee
KDX=Vehicles

AR = Use as Required - = Non Illustrated Part P.A.R. = Paint as Required

INSTRUMENT PANEL 1996 GRAND CHEROKEE
Figure 8A-135

8A-135A

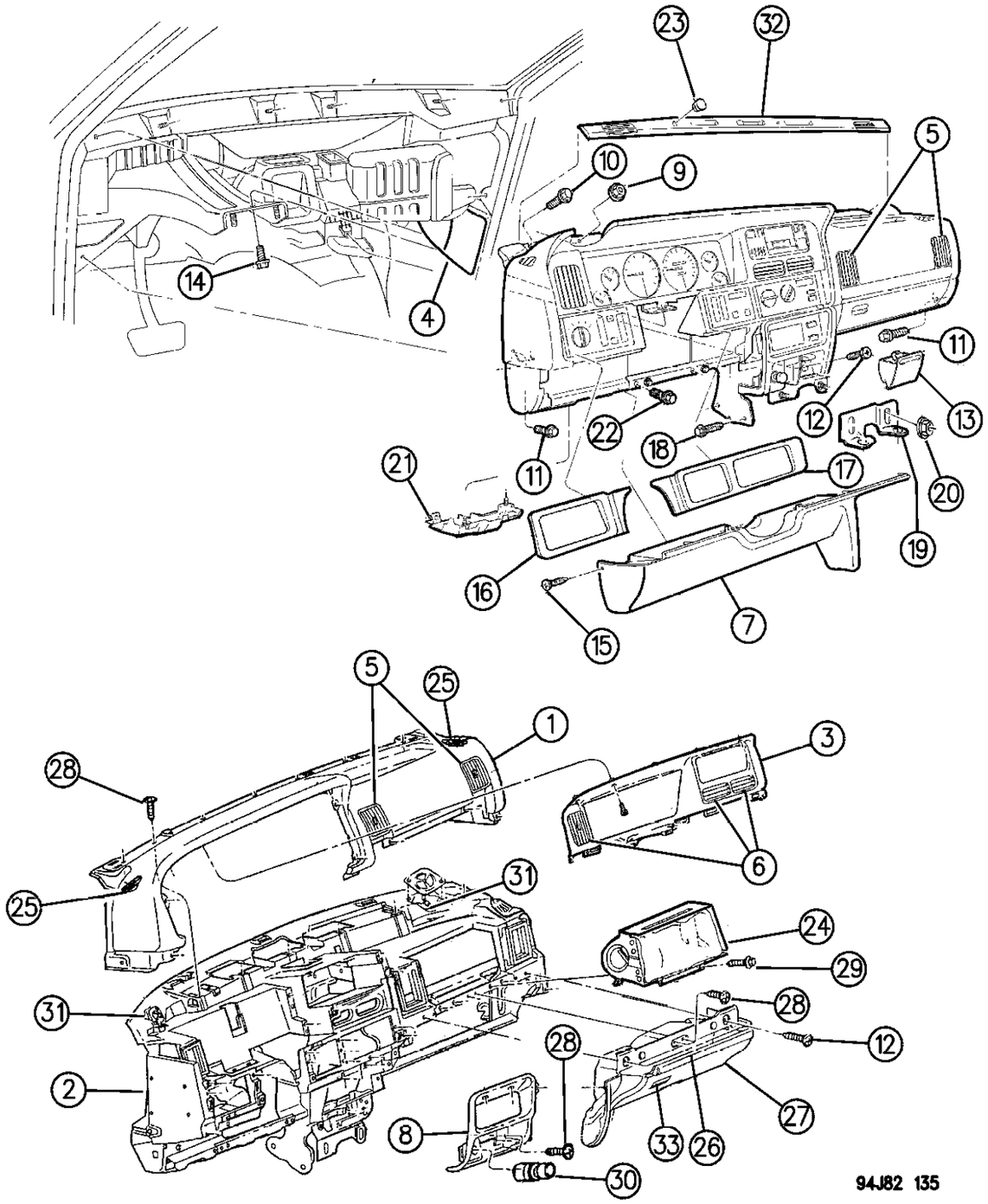

ITEM	PART NUMBER	QTY	BODY	MODEL	DESCRIPTION
-	4565 022	1			LAMP & SWITCH ASSEMBLY, Glove Box ***
-					HINGE ASSEMBLY, Glove Box Door ***
	5511 5326	1			LHD
	5535 6769	1			RHD
-	5503 0270	1			BIN, Storage
	5DW8 6SAZ				Agate
	5DW8 6SC8				Gray
28	6032 723	AR			SCREW
29	6101 786	4			SCREW
30	5600 7364	1			CIGAR LIGHTER ASSEMBLY ***
-	4685 451	1			BASE, Cigar Lighter (Housing)
-	4685 371	1			LIGHT RING ASSEMBLY, Cigar Lighter Push ***
	5600 6927				POWER OUTLET ***
	5511 5322	1			COVER, Power Outlet
31	5604 2100	2			SPEAKER, I/Panel (Tweeter)
32					GRILLE, Defroster Cowl Top P.A.R.
	5DT4 0SC8	1			LHD
	5EP5 2SAZ	1			RHD
33					LATCH & HANDLE ASSEMBLY, Glove Box ***
					LHD
	5DW8 6SAZ	1			Agate
	5DW8 6SC8	1			Gray
					RHD
	5EH9 9SAZ	1			Agate
-	5600 7302	1			INFO CENTER MODULE (Vehicle Info Center) Slaes Code LAZ ***
-	5600 7350	1			Graphic DIsplay Module ***

MODEL CODES:

72=2 DR Wagon
74=4 DR Wagon
77=Open Body 93" Whlbase
78=Open Body 103" Whlbase - Export
T=2WD
J,N=4WD
U=4WD (RHD)

BODY STYLES:

YJ=Wrangler (4X4) "S"
Weangler (4X4) SE
Wrangler (4X4) Sahara
Wrangler (4X4) Renegade
XJ=Cherokee SE
Cherokee Sport
Cherokee Country
ZJ=Grand Cherokee SE
Grand Cherokee Laredo
Grand Cherolee Limited
ZG=Grand Cherokee European
Y1=Wrangler
X1=Cherokee
Z1=Grand Cherokee
KDX=Vehicles

AR = Use as Required - = Non Illustrated Part P.A.R. = Paint as Required

INSTRUMENT CLUSTER WRANGLER YJ
Figure 8A-210

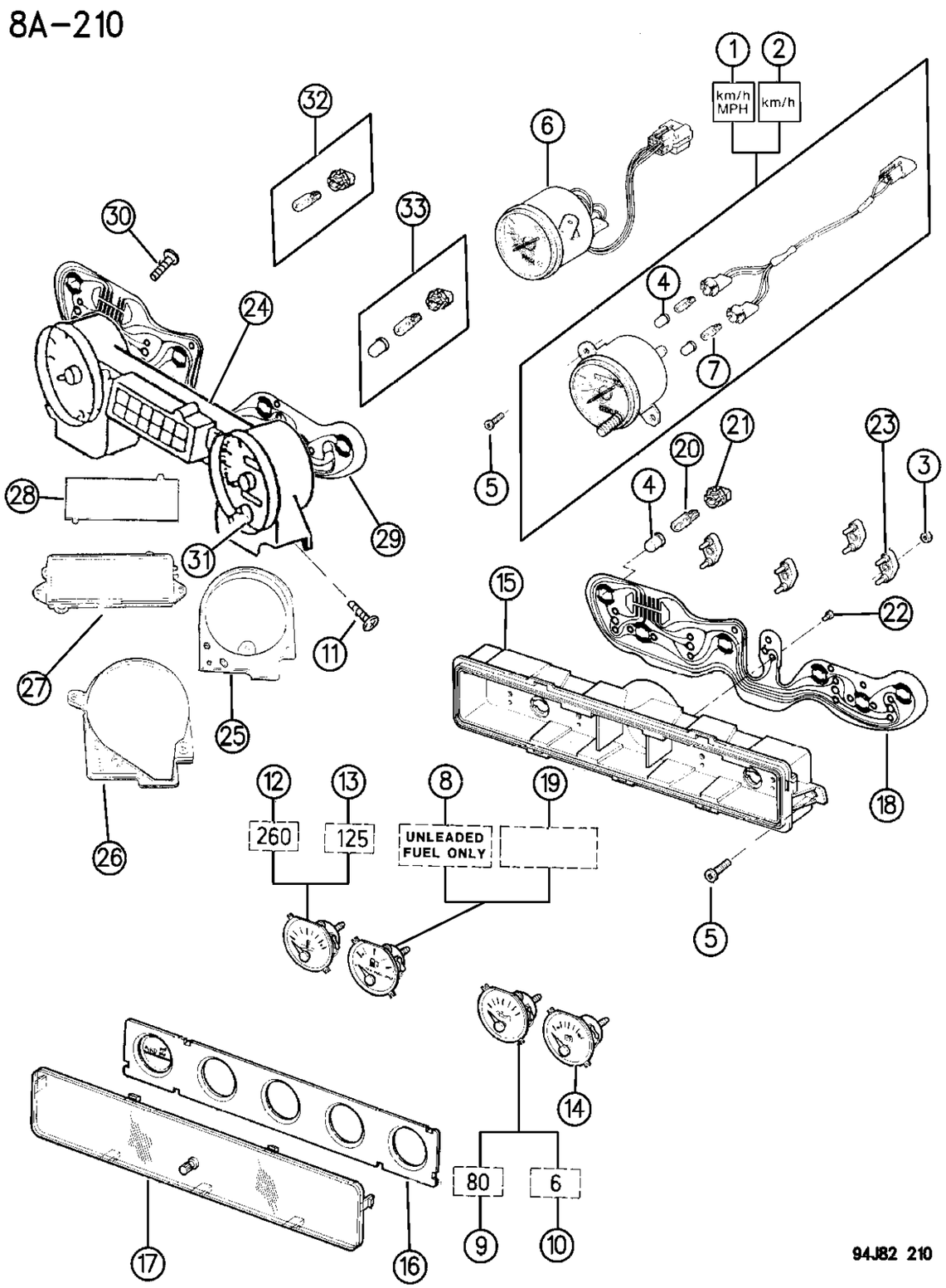

ITEM	PART NUMBER	QTY	BODY	MODEL	DESCRIPTION
1	8350 6588	1			SPEEDOMETER, Miles
2	8350 6589	1			SPEEDOMETER, Kilo
3	3420 1461	4			NUT
4	5600 2289	10			FILTER
5	J448 9487	AR			SCREW
6	8350 6590	1			TACHOMETER
7	9421 330	4			BULB, (194)
8	5600 4879	1			GAUGE, UNLEADED FUEL
9	5600 4880	1			GAUGE, Oil, U.S.
10	5600 4885	1			GAUGE, Oil, Metric
11	5600 5969	6			SCREW
12	5600 4881	1			GAUGE, Temperature
13	5600 4886	1			GAUGE, Temperature, CANADA, EUROPE, MIDEAST, KDX
14	5600 4884	1			VOLTMETER ***
15	8350 6524	1			HOUSING
16	8350 6526	1			BEZEL
17	8350 6527	1			LENS
18	8350 6525	1			BOARD, Circuit
19	5600 4887	1			GAUGE, LEADED FUEL
20	J941 7561	6			BULB, (161)
21	J369 7186	6			SOCKET
22	5600 5967	2			SCREW, Brass M3x16 (Gauge Mounting)
23	8350 2951	4			CONNECTOR, Clip Type (Gauge Mounting)
24	8350 6591	1			CASE
25					MASK
	8350 6592	1			Speedometer
	8350 6593	1			Tachometer
26					LENS
	8350 6594	1			Speedometer
	8350 6595	1			Tachometer
27	8350 6596	1			LENS
28	4720 995	1			TELLTALE LENS ***
29	8350 6599	1			PRINTED CIRCUIT ***
30	5600 5967	3			SCREW
31		1			GROMMET, (not serviced)
32	5600 1787	7			LAMP #74 and Socket (Gray) ***
33	5600 5966	4			LAMP #194(With Bulb Cap) and Socket ***

MODEL CODES:

72=2 DR Wagon
74=4 DR Wagon
77=Open Body 93" Whlbase
78=Open Body 103" Whlbase - Export
T=2WD
J,N=4WD
U=4WD (RHD)

BODY STYLES:

YJ=Wrangler (4X4) "S"
Weangler (4X4) SE
Wrangler (4X4) Sahara
Wrangler (4X4) Renegade
XJ=Cherokee SE
Cherokee Sport
Cherokee Country
ZJ=Grand Cherokee SE
Grand Cherokee Laredo
Grand Cherolee Limited
ZG=Grand Cherokee European
Y1=Wrangler
X1=Cherokee
Z1=Grand Cherokee
KDX=Vehicles

AR = Use as Required - = Non Illustrated Part P.A.R. = Paint as Required

« RETURN TO GROUP INDEX

INSTRUMENT CLUSTER W/O TACHOMETER, W/GAUGES CHEROKEE
Figure 8A-220

8A-220

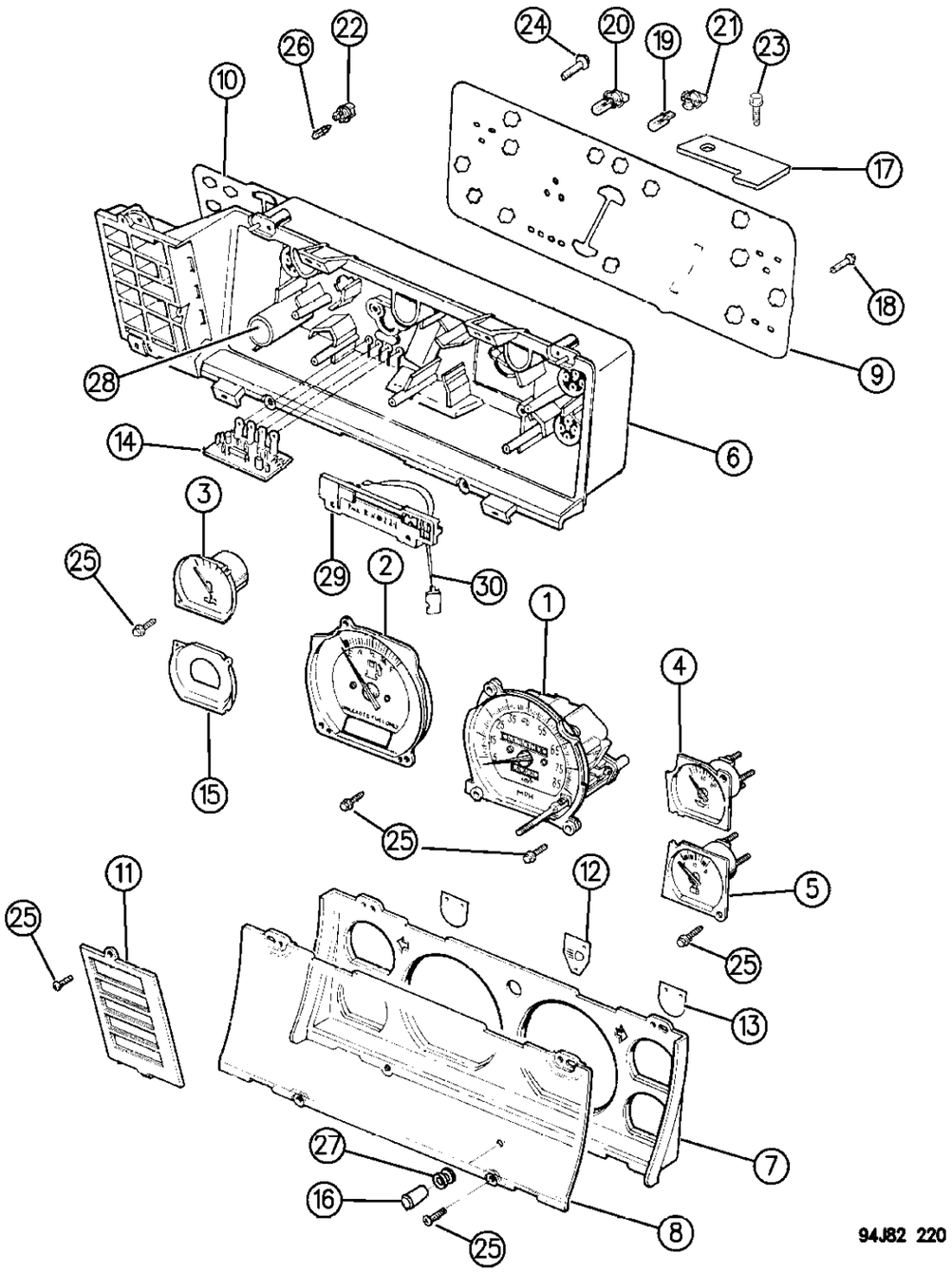

ITEM	PART NUMBER	QTY	BODY	MODEL	DESCRIPTION
1					SPEEDOMETER
					LHD
	4713 888	1			120 M.P.H., Police
	4728 594	1			210 Kilo, Police
	4728 046	1			Kilo
					RHD
	4728 043	1			M.P.H. (Postal)
	8350 6582	1			Kilo
2					GAUGE, Fuel
					LHD
	4720 526	1			Gallons Police
	4728 595	1			Liters, Police
	5600 5974	1			Liters
					RHD
	5600 5973	1			Gallons
	5600 5974	1			Liters
3					GAUGE, Temperature
	8350 4240	1			LHD
	8350 4239	1			RHD
	8350 4239	1			Police, M.P.H.
	8350 4240	1			Police, Kilo
4					GAUGE, Oil
	8350 4244	1			LHD
	8350 4243	1			RHD
	8350 4243	1			Police, M.P.H.
	8350 4244	1			Police, Kilo
5	8350 5413	1			VOLTMETER ***
6					HOUSING, Cluster
	4720 527	1			LHD
	8350 6583	1			RHD
7	8350 6390	1			BEZEL, Cluster
8	5600 5957	1			LENS, Cluster
9	4720 528	1			CONDUCTOR, Printed Circuit ***
	8350 6584	1			RHD ***
10	8350 4262	1			CONDUCTOR, Printed Circuit ***
	8350 6585	1			RHD
11					FILTER, Warning Lamp
	5600 5962	1			U.S.
	5600 5963	1			CANADA, EUROPE, MIDEAST, KDX
	8350 6586	1			RHD
12	8350 4267	1			FILTER, High Beam Lamp
13	8350 4269	2			FILTER, Turn Signal Lamp

MODEL CODES:

72=2 DR Wagon
74=4 DR Wagon
77=Open Body 93" Whlbase
78=Open Body 103" Whlbase - Export
T=2WD
J,N=4WD
U=4WD (RHD)

BODY STYLES:

YJ=Wrangler (4X4) "S"
Weangler (4X4) SE
Wrangler (4X4) Sahara
Wrangler (4X4) Renegade

XJ=Cherokee SE
Cherokee Sport
Cherokee Country

ZJ=Grand Cherokee SE
Grand Cherokee Laredo
Grand Cherolee Limited
ZG=Grand Cherokee European

Y1=Wrangler
X1=Cherokee
Z1=Grand Cherokee
KDX=Vehicles

AR = Use as Required - = Non Illustrated Part P.A.R. = Paint as Required

INSTRUMENT CLUSTER W/O TACHOMETER, W/GAUGES CHEROKEE
Figure 8A-220

8A-220

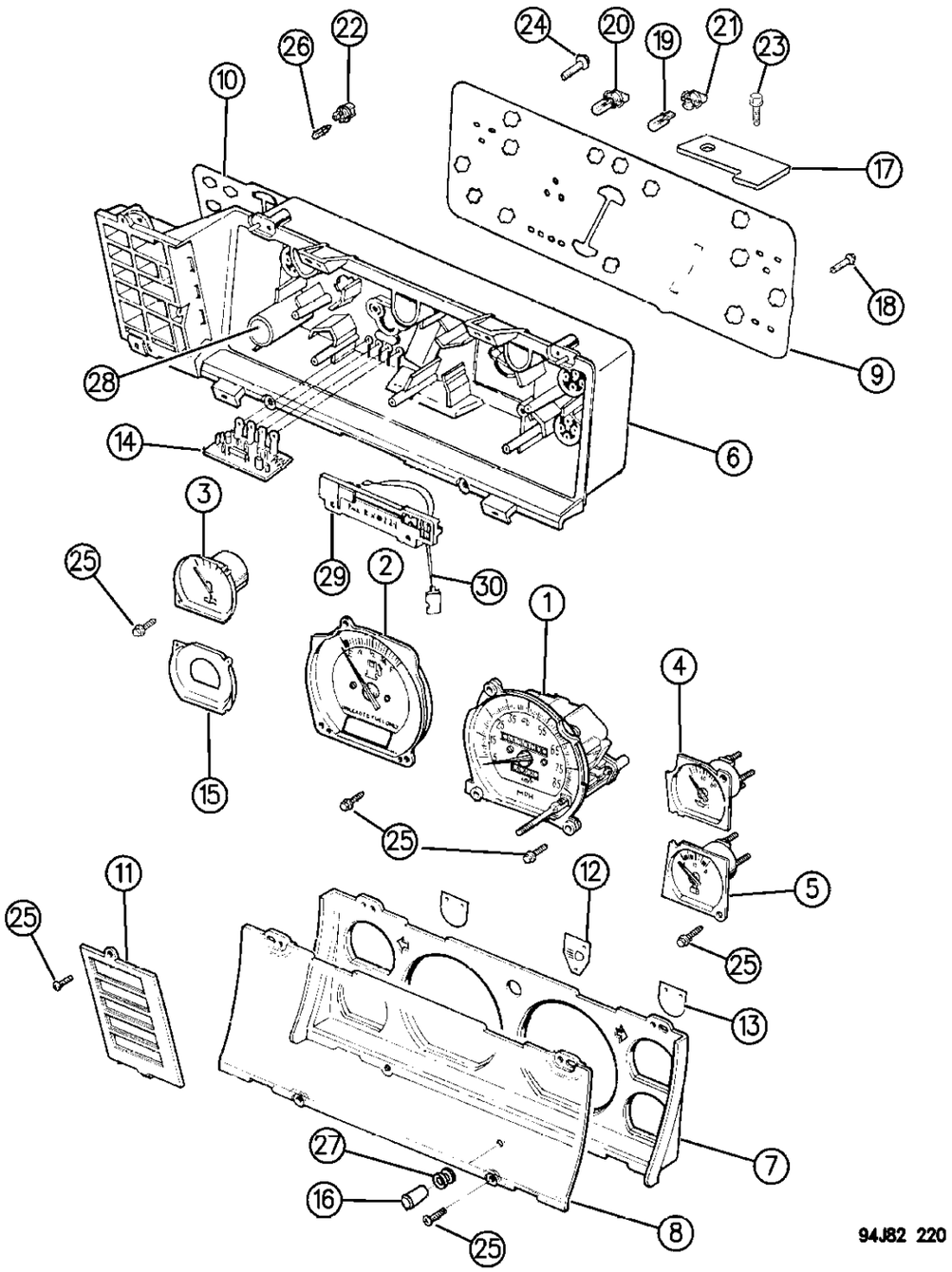

ITEM	PART NUMBER	QTY	BODY	MODEL	DESCRIPTION
14	4720 529	1			MODULE, Low Fuel Warning
15	8350 6392	1			BEZEL, Low Fuel Warning
16	8350 4273	1			KNOB, Odometer
17	5600 5961	1			BRACKET
18	5600 5979	AR			SCREW, 22mm Long
19					BULB
	9421 330	15			Coded (194)
	9425 542	1			Coded (168)
	J941 7561	1			Coded (161)
20	5600 5966	7			BULB AND SOCKET ***
21	J369 7186	15			SOCKET
22	5600 1787	10			SOCKET
23	5600 5968	AR			SCREW, 14mm Long
24	8350 4278	AR			SCREW, 30.5 mm Long
25	S016 1860	AR			SCREW
26					BULB
	9433 184	10			Coded (74)
	J943 6789	1			Coded (37)
27	8350 4276	1			GROMMET, Trip Reset
28	8350 5408	1			FILTER, Light
29	8350 4235	1			DIAL, Shift ***
30	8350 6061	1			CABLE

MODEL CODES:

72=2 DR Wagon
74=4 DR Wagon
77=Open Body 93" Whlbase
78=Open Body 103" Whlbase - Export
T=2WD
J,N=4WD
U=4WD (RHD)

BODY STYLES:

YJ=Wrangler (4X4) "S"
Weangler (4X4) SE
Wrangler (4X4) Sahara
Wrangler (4X4) Renegade

XJ=Cherokee SE
Cherokee Sport
Cherokee Country

ZJ=Grand Cherokee SE
Grand Cherokee Laredo
Grand Cherolee Limited
ZG=Grand Cherokee European

Y1=Wrangler
X1=Cherokee
Z1=Grand Cherokee
KDX=Vehicles

AR = Use as Required - = Non Illustrated Part P.A.R. = Paint as Required

INSTRUMENT CLUSTER W/O TACHOMETER, W/WARNING LAMPS CHEROKEE
Figure 8A-222

8A-222

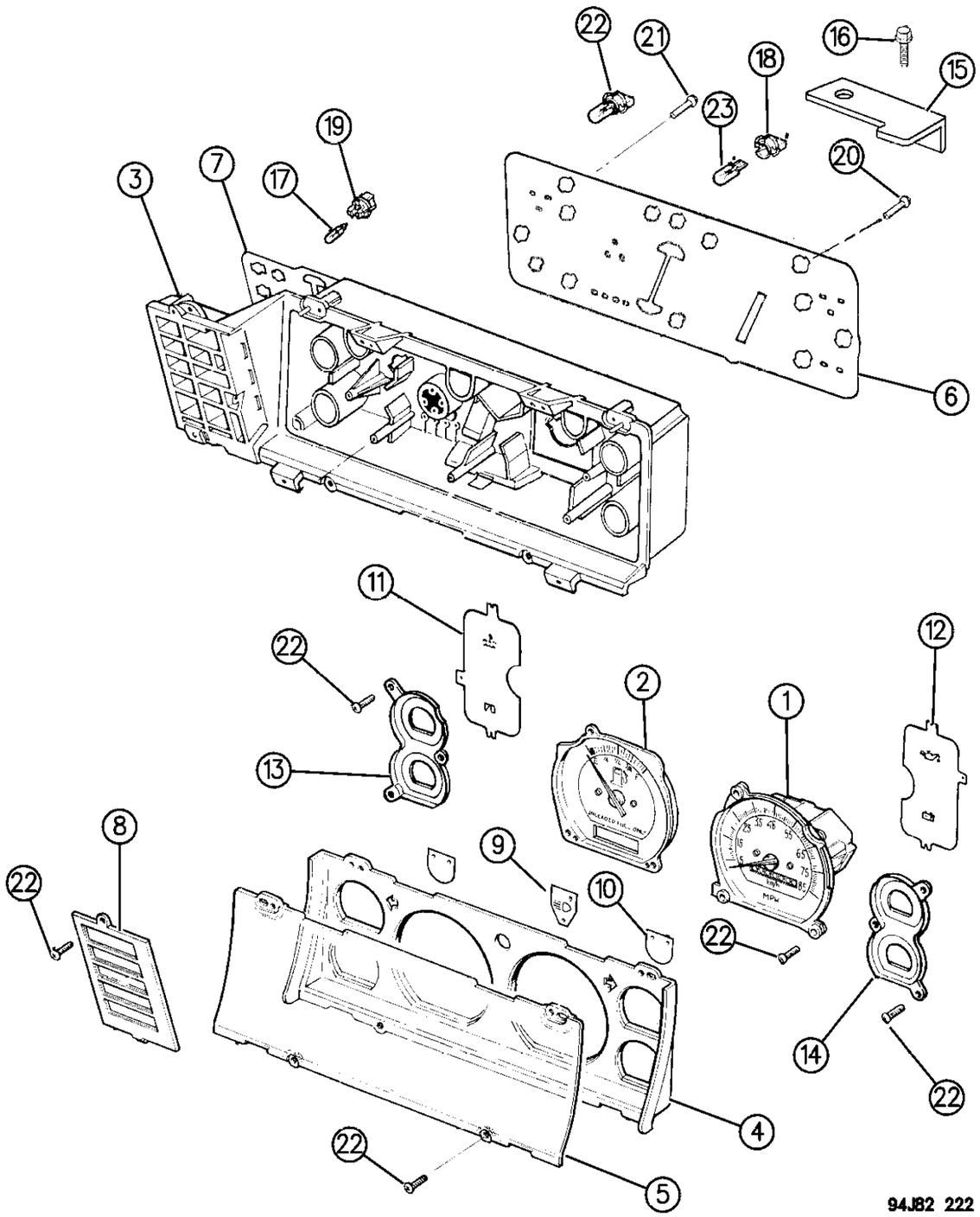

ITEM	PART NUMBER	QTY	BODY	MODEL	DESCRIPTION
1					SPEEDOMETER
	4713 885	1			85 M.P.H.
	4713 886	1			210 K.P.H.
2					GAUGE, Fuel
	8350 6393	1			Gallons
	8350 6394	1			Liters
3	5600 5977	1			HOUSING, Cluster
4	8350 6395	1			BEZEL, Cluster
5	8350 4256	1			LENS, Cluster
6	5600 5978	1			CONDUCTOR, Printed Circuit ***
7	8350 4263	1			CONDUCTOR, Printed Circuit
8					FILTER, Warning Lamps
	5600 5962	1			U.S.
	5600 5965	1			CANADA, EUROPE, MIDEAST, KDX
9	8350 4267	1			FILTER, H/Beam Lamp
10	8350 4269	2			FILTER, Turn Signal Lamp
11	8350 5409	1			FILTER, Cluster
12	8350 4272	1			FILTER, Cluster
13	8350 6396	1			BEZEL, Temperature
14	8350 6397	1			BEZEL, Oil
15	5600 5961	2			BRACKET
16	5600 5979	3			SCREW, 22mm Long
17					BULB
	9433 184	10			Coded (74)
	J943 6789	1			Coded (37)
18	J369 7186	15			SOCKET
19	5600 1787	10			BULB (74), and Socket ***
20	5600 5968	7			SCREW, 14mm long
21	5600 5969	11			SCREW, 28mm long
22	5600 5966	1			BULB AND SOCKET ***
23					BULB
	9421 330	15			Coded (194)
	J941 7561	1			Coded (161)
	9425 542	1			Coded (168)

MODEL CODES:

72=2 DR Wagon
74=4 DR Wagon
77=Open Body 93" Whlbase
78=Open Body 103" Whlbase - Export
T=2WD
J,N=4WD
U=4WD (RHD)

BODY STYLES:

YJ=Wrangler (4X4) "S"
Weangler (4X4) SE
Wrangler (4X4) Sahara
Wrangler (4X4) Renegade
XJ=Cherokee SE
Cherokee Sport
Cherokee Country
ZJ=Grand Cherokee SE
Grand Cherokee Laredo
Grand Cherolee Limited
ZG=Grand Cherokee European
Y1=Wrangler
X1=Cherokee
Z1=Grand Cherokee
KDX=Vehicles

AR = Use as Required - = Non Illustrated Part P.A.R. = Paint as Required

« RETURN TO GROUP INDEX

INSTRUMENT CLUSTER W/TACHOMETER, W/GAUGES CHEROKEE
Figure 8A-224

8A-224A

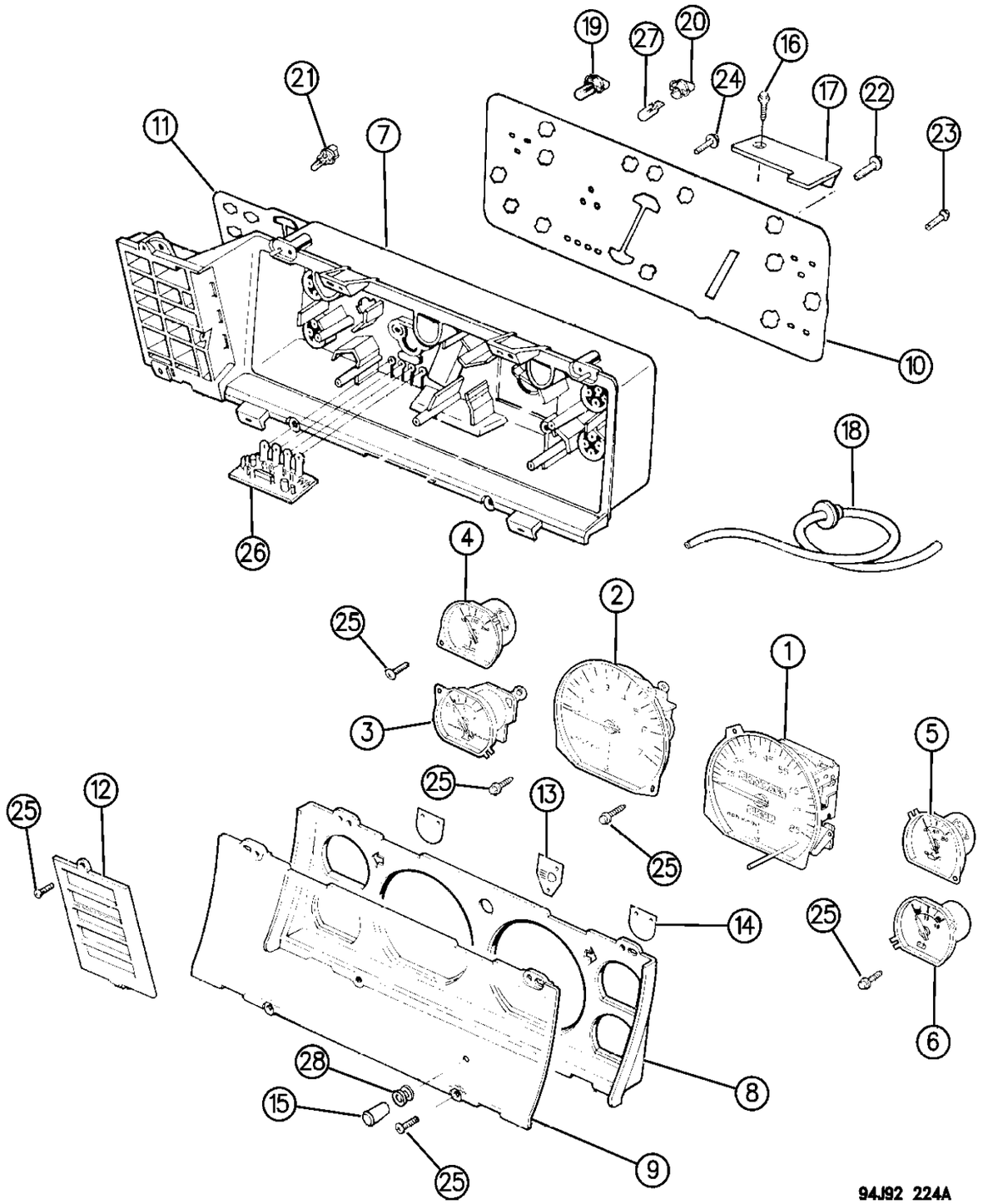

ITEM	PART NUMBER	QTY	BODY	MODEL	DESCRIPTION
1					SPEEDOMETER
					Miles
	4713 883	1			M.P.H
	4713 512	1			RHD
					Kilo
	4713 884	1			K.P.H
	4713 517	1			RHD (1994)
	4773 798				RHD (1995-96)
2					TACHOMETER
	5600 4092	1			Gas
		1			Diesel
	4741 677				1994-95
	4798 853				1996
3					GAUGE, Fuel
	5600 5952	1			Unleaded
	5600 5953	1			Leaded
	5600 5954	1			Diesel
4					GAUGE, Temperature
	8350 4461	1			Gas - U.S.
	8350 4239				RHD
	8350 4462	1			Gas - CANADA, EUROPE, MIDEAST, KDX
		1			Diesel
	8350 4507				1994
	4741 678				1995-96
5					GAUGE, Oil
	8350 4463	1			Gas - U.S.
	8350 4464	1			Gas - CANADA, EUROPE, MIDEAST, KDX
		1			Diesel
	8350 4509				1994
	4741 679				1995-96
6					VOLTMETER ***
	8350 5414	1			Diesel & Gasoline Engine
	8350 6389	1			Gauge, Turbo Boost, Diesel
7	5600 5955	1			HOUSING, Cluster
	5600 5972	1			Diesel
	4638 851	1			RHD
8	5600 5956	1			BEZEL, Cluster
9	5600 5957	1			LENS, Cluster
10	5600 5958	1			CONDUCTOR, Printed Circuit ***
		1			Diesel
	5600 5959				1994
	4741 680				1995-96

MODEL CODES:

72=2 DR Wagon
74=4 DR Wagon
77=Open Body 93" Whlbase
78=Open Body 103" Whlbase - Export
T=2WD
J,N=4WD
U=4WD (RHD)

BODY STYLES:

YJ=Wrangler (4X4) "S"
Weangler (4X4) SE
Wrangler (4X4) Sahara
Wrangler (4X4) Renegade
XJ=Cherokee SE
Cherokee Sport
Cherokee Country
ZJ=Grand Cherokee SE
Grand Cherokee Laredo
Grand Cherolee Limited
ZG=Grand Cherokee European
Y1=Wrangler
X1=Cherokee
Z1=Grand Cherokee
KDX=Vehicles

AR = Use as Required - = Non Illustrated Part P.A.R. = Paint as Required

INSTRUMENT CLUSTER W/TACHOMETER, W/GAUGES CHEROKEE
Figure 8A-224

8A-224A

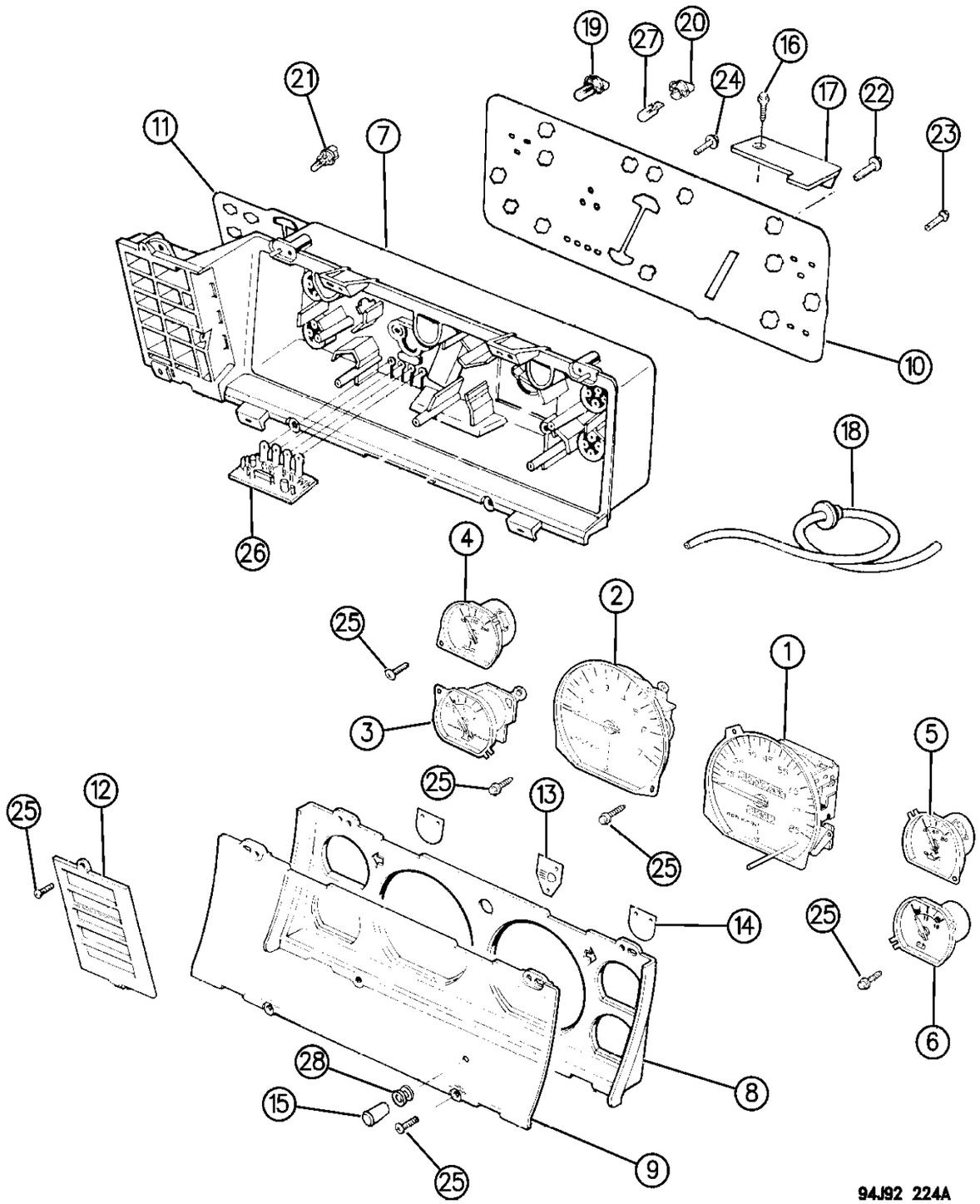

ITEM	PART NUMBER	QTY	BODY	MODEL	DESCRIPTION
	4638 852	1			RHD
11	8350 4262	1			CONDUCTOR, Printed Circuit ***
	8350 4263	1			Diesel
	8350 6585	1			RHD
12		1			FILTER, Warning Lamp
	5600 5962				Gas - U.S.
	5600 5963				Gas - CANADA, EUROPE, MIDAEST, KDX
	5600 5965				1994 2.1L Diesel
	4741 681				1995-96 2.5L Turbo Diesel
	4741 688				1995-96 2.5L Diesel
	4713 520				RHD 2.5L/4.0L Gas (1994-95)
	4773 538				RHD 2.5L/4.0L Gas (1996)
13	8350 4267	1			FILTER, High Beam
14	8350 4269	2			FILTER, Turn Signal Lamp
15	8350 4273	1			KNOB, Odometer
16	5600 5979	2			SCREW, 22mm Long
17	5600 5961	1			BRACKET
18	5600 1448	1			HOSE, Turbo Boost Guage
19	5600 5966	AR			BULB AND SOCKET ***
20	J369 7186	12			SOCKET
21	5600 1787	10			LAMP and SOCKET ASSEMBLY, Warning ***
22	5600 5967	9			SCREW, 16mm Long
23	8350 4278	11			SCREW, 30.5mm long
24	8350 4279	9			SCREW, 13mm Long
25	S016 1860	AR			SCREW
26	5600 5960	1			MODULE, Low Fuel Warning
	9433 184	10			Coded (74)
27					BULB
	9421 330	12			Coded (194)
28	8350 4276	1			GROMMET, Trip Reset
-	4882 485	1			WINDOW FRAME ASSY, Cluster (MPH) ***
-	4882 486	1			WINDOW FRAME ASSY, Cluster (KPH) ***

MODEL CODES:

72=2 DR Wagon
74=4 DR Wagon
77=Open Body 93" Whlbase
78=Open Body 103" Whlbase - Export
T=2WD
J,N=4WD
U=4WD (RHD)

BODY STYLES:

YJ=Wrangler (4X4) "S"
Weangler (4X4) SE
Wrangler (4X4) Sahara
Wrangler (4X4) Renegade
XJ=Cherokee SE
Cherokee Sport
Cherokee Country
ZJ=Grand Cherokee SE
Grand Cherokee Laredo
Grand Cherolee Limited
ZG=Grand Cherokee European
Y1=Wrangler
X1=Cherokee
Z1=Grand Cherokee
KDX=Vehicles

AR = Use as Required - = Non Illustrated Part P.A.R. = Paint as Required

INSTRUMENT CLUSTER GRAND CHEROKEE
Figure 8A-230

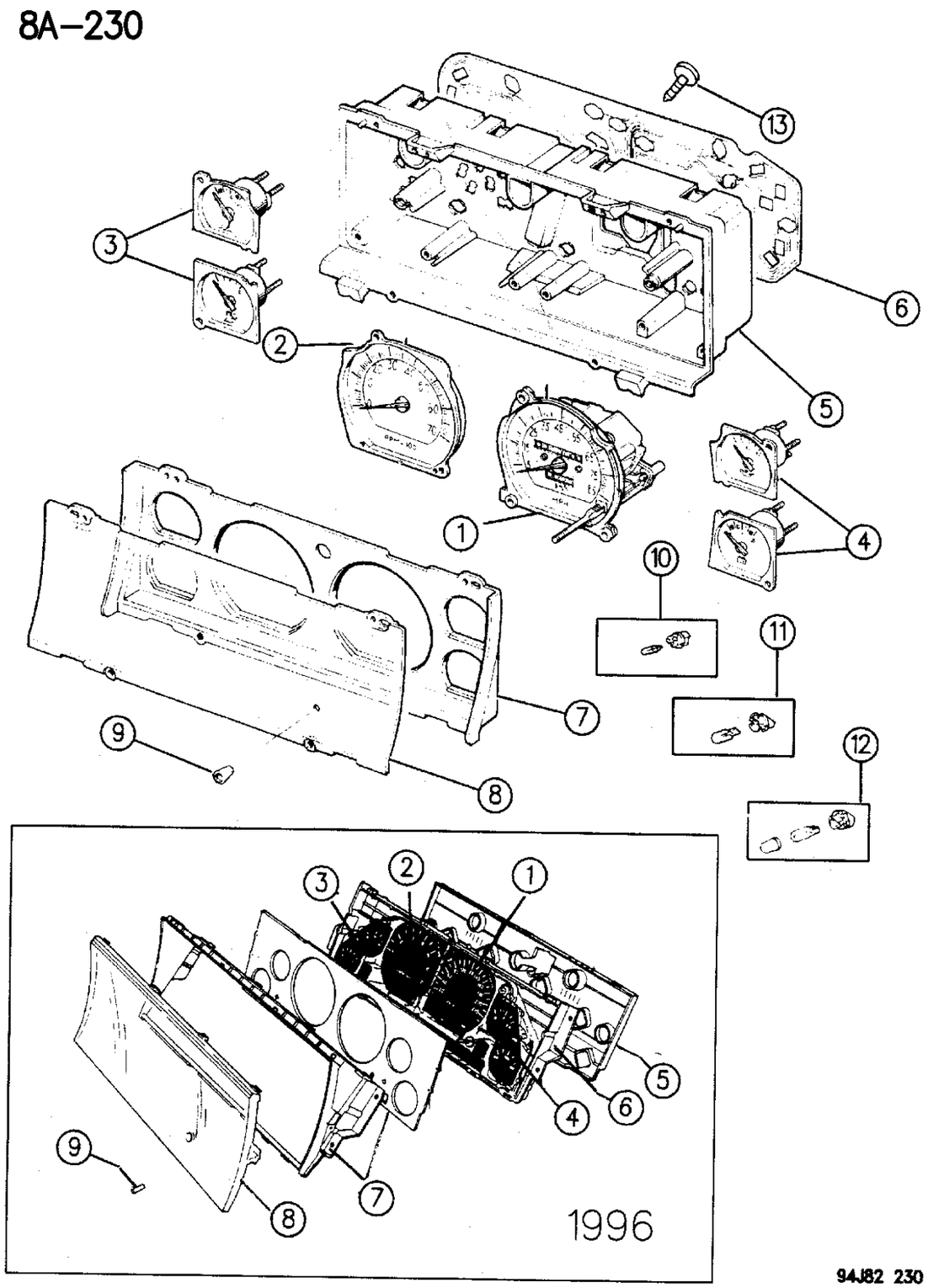

ITEM	PART NUMBER	QTY	BODY	MODEL	DESCRIPTION
1					SPEEDOMETER
	4637 879	1	ZJZ1		Miles (1994-95)
	4798 828	1	ZJZ1		Miles 1996 (Odometer Serviced w/Printed Circuit Board)
	4637 880	1	ZJZ1ZG		Kilo (1994-95)
	4798 829	1	ZJZ1ZG		Kilo (1996) 230 Kilo Primary
	4797 920	1	ZG		Kilo (1995-96) 240 Kilo
	4798 831	1	ZG		Kilo (1996) 200 Kilo w/o Secondary
	4798 830	1	ZG		Miles (1996) 120/125 Primary
	4798 839		ZG		MPH, w/Tach., RHD, EUROPE
2					TACHOMETER
	4637 881	1			1994-95
	4798 832	1			1996
	4798 833		ZG		RHD, EUROPE
3					FUEL/VOLT Guage ***
	4637 882	1			U.S.A. (1994-95)
	4798 837	1			U.S.A. (1996)
	4637 883	1			EXPORT & CANADA (1994-95)
	4798 838	1			EXPORT & CANADA (1996)
4					TEMP/OIL Guage ***
	4637 884	1			U.S.A. (1994-95)
	4798 834	1			U.S.A. (1996)
	4637 885	1			EXPORT & CANADA (1994-95)
	4798 836	1	ZG		Gauge, Oil, RHD, EUROPE
	4798 835	1			EXPORT & CANADA (1996)
5					CASE
					1994-95
	4761 161	1			U.S.
	4761 163	1			EXPORT
	4761 162	1			Canada
					1996 (Serviced w/Printed Circuit Board Item # 6)
6					PRINTED Circuit w/Telltale Strip ***
	4637 888	1	ZJ ZG		1994-95
	4856 049	1	ZJ ZG		w/MPH & Tach 5.2L, 4.0L (1996)
	4856 050	1	ZJ ZG		w/Kilo & Tach 5.2L, 4.0L (1996)
	4856 051	1	ZG		w/Kilo & Tach 2.5L Diesel
	4856 584	1	ZG		w/MPH & Tach 2.5L Diesel United Kingdom RHD
7					MASK
	4746 384	1			U.S.A. (1994-95)
	4746 389	1			EXPORT (1994-96)
	4746 387	1			Canada (1994-95)
	4798 823	1			#1 (1996)
	4798 824	1			#2 (1996)

MODEL CODES:

72=2 DR Wagon
74=4 DR Wagon
77=Open Body 93" Whlbase
78=Open Body 103" Whlbase - Export
T=2WD
J,N=4WD
U=4WD (RHD)

BODY STYLES:

YJ=Wrangler (4X4) "S"
Weangler (4X4) SE
Wrangler (4X4) Sahara
Wrangler (4X4) Renegade
XJ=Cherokee SE
Cherokee Sport
Cherokee Country
ZJ=Grand Cherokee SE
Grand Cherokee Laredo
Grand Cherolee Limited
ZG=Grand Cherokee European
Y1=Wrangler
X1=Cherokee
Z1=Grand Cherokee
KDX=Vehicles

AR = Use as Required - = Non Illustrated Part P.A.R. = Paint as Required

INSTRUMENT CLUSTER GRAND CHEROKEE
Figure 8A-230

8A–230

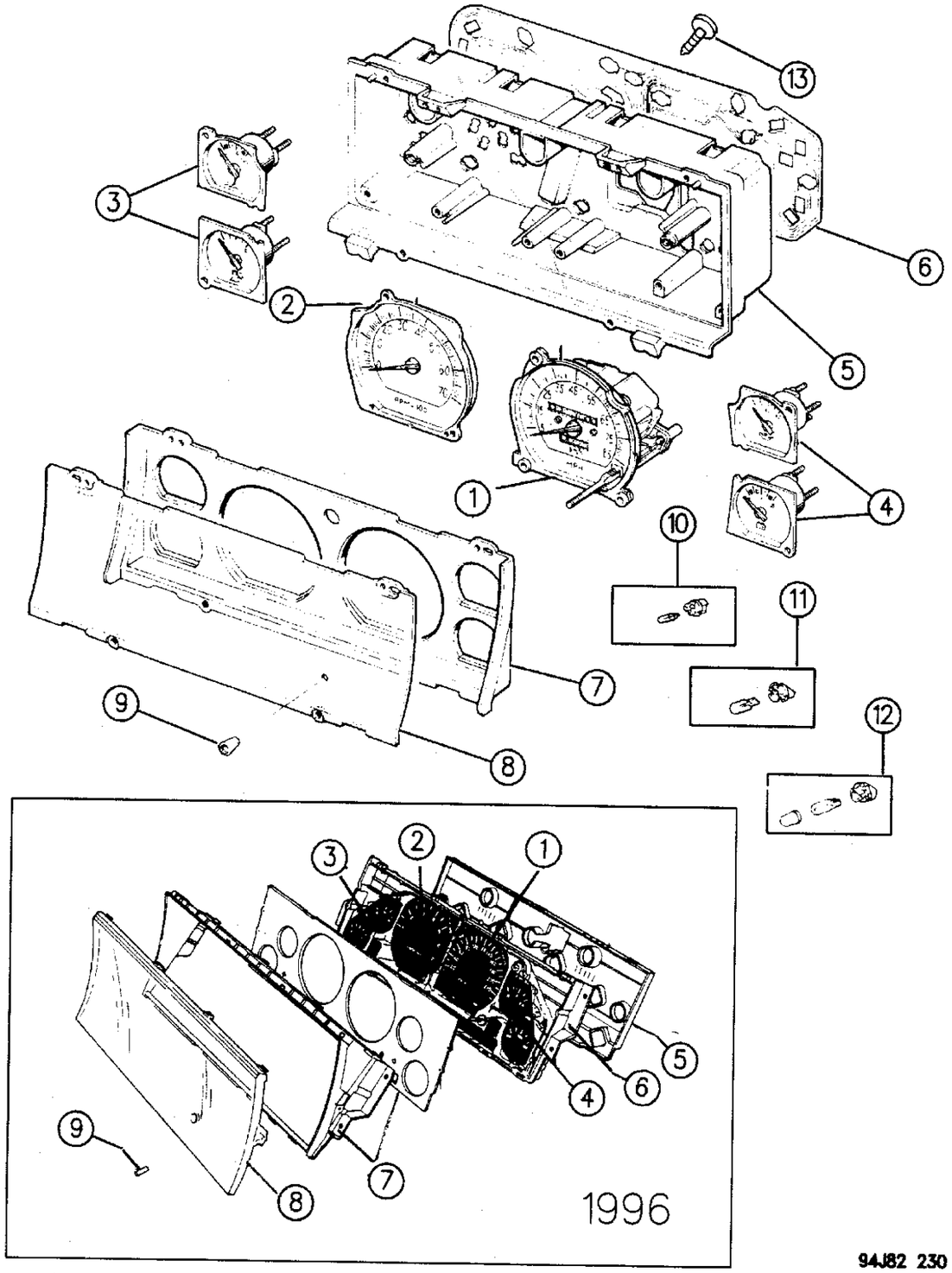

ITEM	PART NUMBER	QTY	BODY	MODEL	DESCRIPTION
8					LENS
		1			1994-95 (Serviced in Mask Assembly)
	4798 826	1			1996
9	4638 220	1			KNOB
10		AR			BULB (74), and Socket ***
	5600 1787				1994-95
	4798 827				1996
11-12		AR			BULB (194), and Socket and Cap ***
	5600 5966				1994-95
	4437 590				1996
13		AR			SCREW (Cross Recess Head Machine) ***
	5600 5967				M3X16 (1994-95)
	5600 5968				4X14 Tapping (1994-95)
	4798 995				1996

MODEL CODES:

72=2 DR Wagon
74=4 DR Wagon
77=Open Body 93" Whlbase
78=Open Body 103" Whlbase - Export
T=2WD
J,N=4WD
U=4WD (RHD)

BODY STYLES:

YJ=Wrangler (4X4) "S"
Weangler (4X4) SE
Wrangler (4X4) Sahara
Wrangler (4X4) Renegade
XJ=Cherokee SE
Cherokee Sport
Cherokee Country
ZJ=Grand Cherokee SE
Grand Cherokee Laredo
Grand Cherolee Limited
ZG=Grand Cherokee European
Y1=Wrangler
X1=Cherokee
Z1=Grand Cherokee
KDX=Vehicles

AR = Use as Required - = Non Illustrated Part P.A.R. = Paint as Required

RADIO, ANTENNA AND SPEAKERS WRANGLER YJ
Figure 8A-310

8A-310

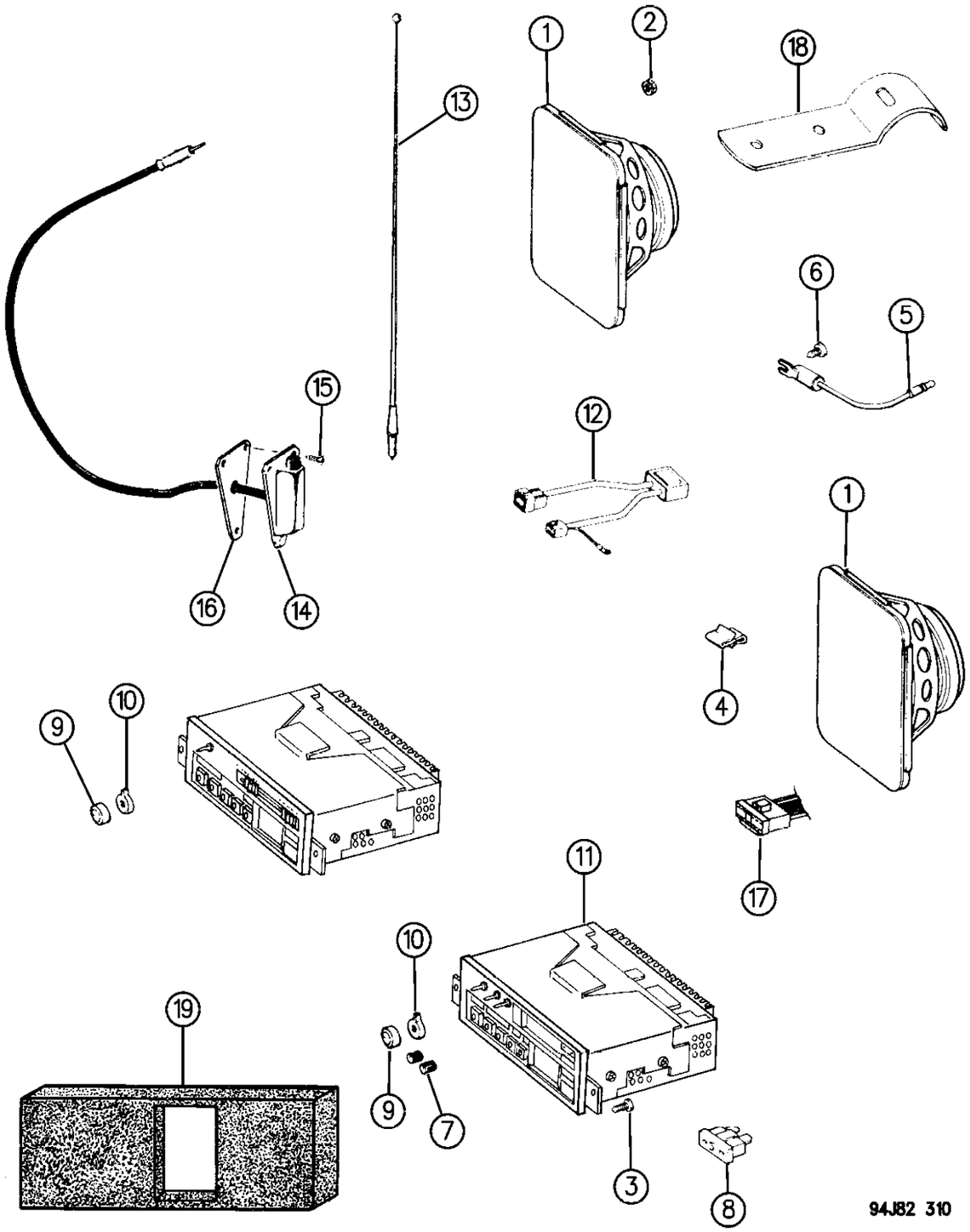

ITEM	PART NUMBER	QTY	BODY	MODEL	DESCRIPTION
1					SPEAKER
	5600 2695	2			Front
	5600 5924	2			Rear (Sound Bar)
2		8			NUT (8-32 DNS)
3	J400 3671	2			SCREW
4	J400 5963	1			CLIP
5		1			CAPACITOR, Ignition (Not Serviced)
6	J940 9106	1			SCREW
7	8350 7042	2			KNOB, Bass/Treble w/Cass.
8	J323 1213	1			FUSE, 5 Ampere
9	8350 7040	1			KNOB, Volume
10	8350 7078	1			KNOB, Fader
11					RADIO
	5600 9003	1			AM/FM/ETR Stereo w/Clock
	5600 7215	1			AM/FM Stereo Cassette w/Clock
	5600 6837	1			EUROPE
12	5600 3160	1			HARNESS, Jumper. KDX-Venezuela
13	8220 0684	1			ANTENNA, Radio-Black
14		1			BASE, w/Cable-Black
	8220 0683				1994
	5600 9039				1995
15	J400 2807	1			SCREW
16	J097 5528	1			GASKET
17	8350 6510	AR			HARNESS, Radio Repair
18					BRACKET, Rear Speaker
	5600 6320	1			Rt.
	5600 6959	1			Lt.
19	5600 6863	1			SEAL
-		1			SOUNDBAR w or w/o Map Light (Modify for w/Map Light, Cut Opening) ***
	8220 1657				1994 Cinder
	8220 1424				1994 Charcoal
	8220 3031				1995 Black
	8220 3032				1995 Spice
	4761 492	1			Cover Assembly
	4761 494	2			Grille, Speaker
	5600 5924	2			Speaker Assembly (4")
		1			Bracket, Rear Speaker Enclosure
	5600 6320				Right
	5600 6959				Left
		1			LAMP ASSEMBLY, Dome
	GS87 RC1				Blue

MODEL CODES:

72=2 DR Wagon
74=4 DR Wagon
77=Open Body 93" Whlbase
78=Open Body 103" Whlbase - Export
T=2WD
J,N=4WD
U=4WD (RHD)

BODY STYLES:

YJ=Wrangler (4X4) "S"
Weangler (4X4) SE
Wrangler (4X4) Sahara
Wrangler (4X4) Renegade
XJ=Cherokee SE
Cherokee Sport
Cherokee Country
ZJ=Grand Cherokee SE
Grand Cherokee Laredo
Grand Cherolee Limited
ZG=Grand Cherokee European
Y1=Wrangler
X1=Cherokee
Z1=Grand Cherokee
KDX=Vehicles

AR = Use as Required - = Non Illustrated Part P.A.R. = Paint as Required

RADIO, ANTENNA AND SPEAKERS WRANGLER YJ
Figure 8A-310

8A-310

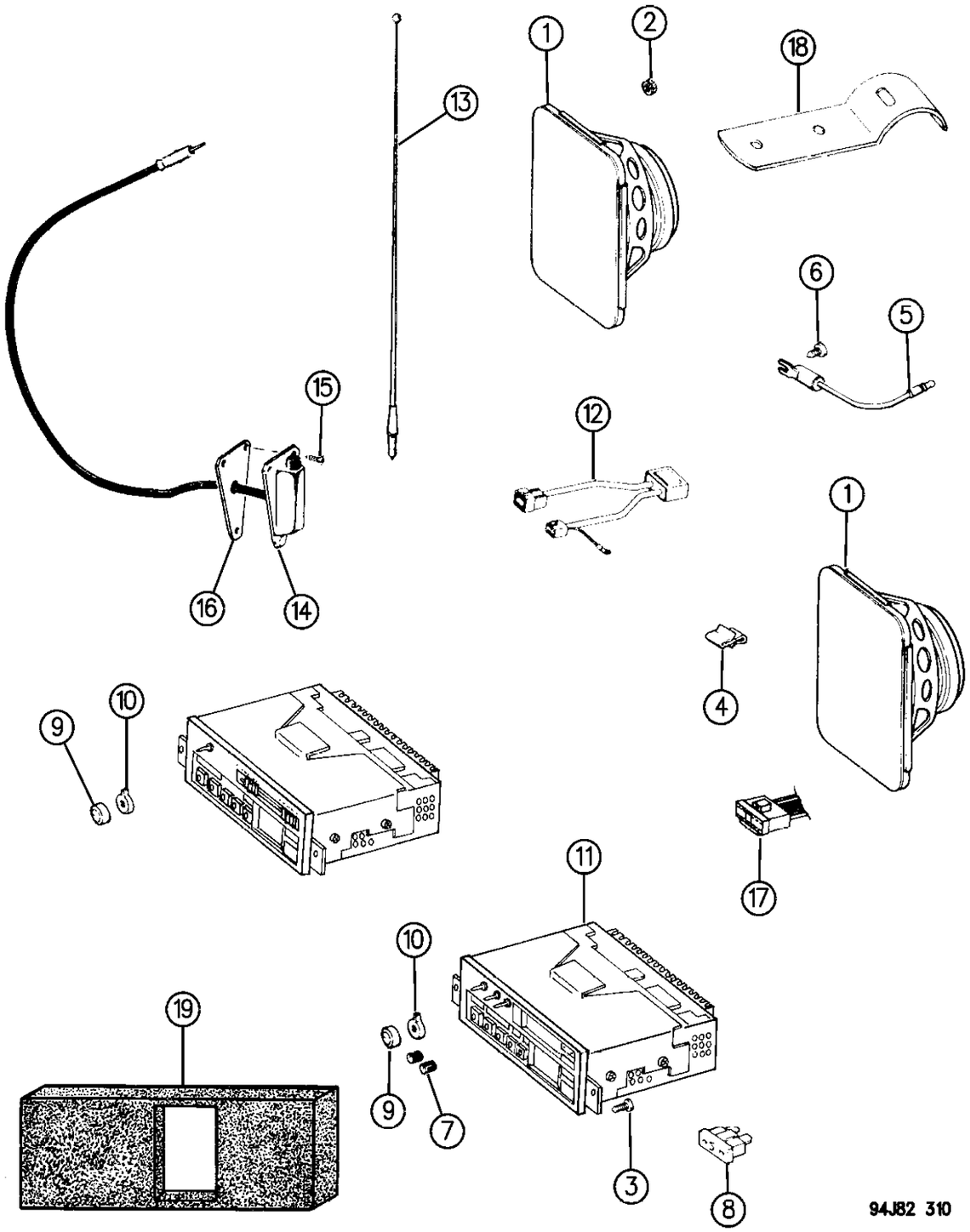

ITEM	PART NUMBER	QTY	BODY	MODEL	DESCRIPTION
	GS87 RF1				Neutral
	GS87 RJJ				Silverfern
	GS87 RX9				Black
	0154 655	1			Bulb & Lamp Assembly
	4746 362	2			Lens

MODEL CODES:

72=2 DR Wagon
74=4 DR Wagon
77=Open Body 93" Whlbase
78=Open Body 103" Whlbase - Export
T=2WD
J,N=4WD
U=4WD (RHD)

BODY STYLES:

YJ=Wrangler (4X4) "S"
Weangler (4X4) SE
Wrangler (4X4) Sahara
Wrangler (4X4) Renegade
XJ=Cherokee SE
Cherokee Sport
Cherokee Country
ZJ=Grand Cherokee SE
Grand Cherokee Laredo
Grand Cherolee Limited
ZG=Grand Cherokee European
Y1=Wrangler
X1=Cherokee
Z1=Grand Cherokee
KDX=Vehicles

AR = Use as Required - = Non Illustrated Part P.A.R. = Paint as Required

RADIO AND SPEAKERS TWO SPEAKER SYSTEM CHEROKEE
Figure 8A-320

8A-320

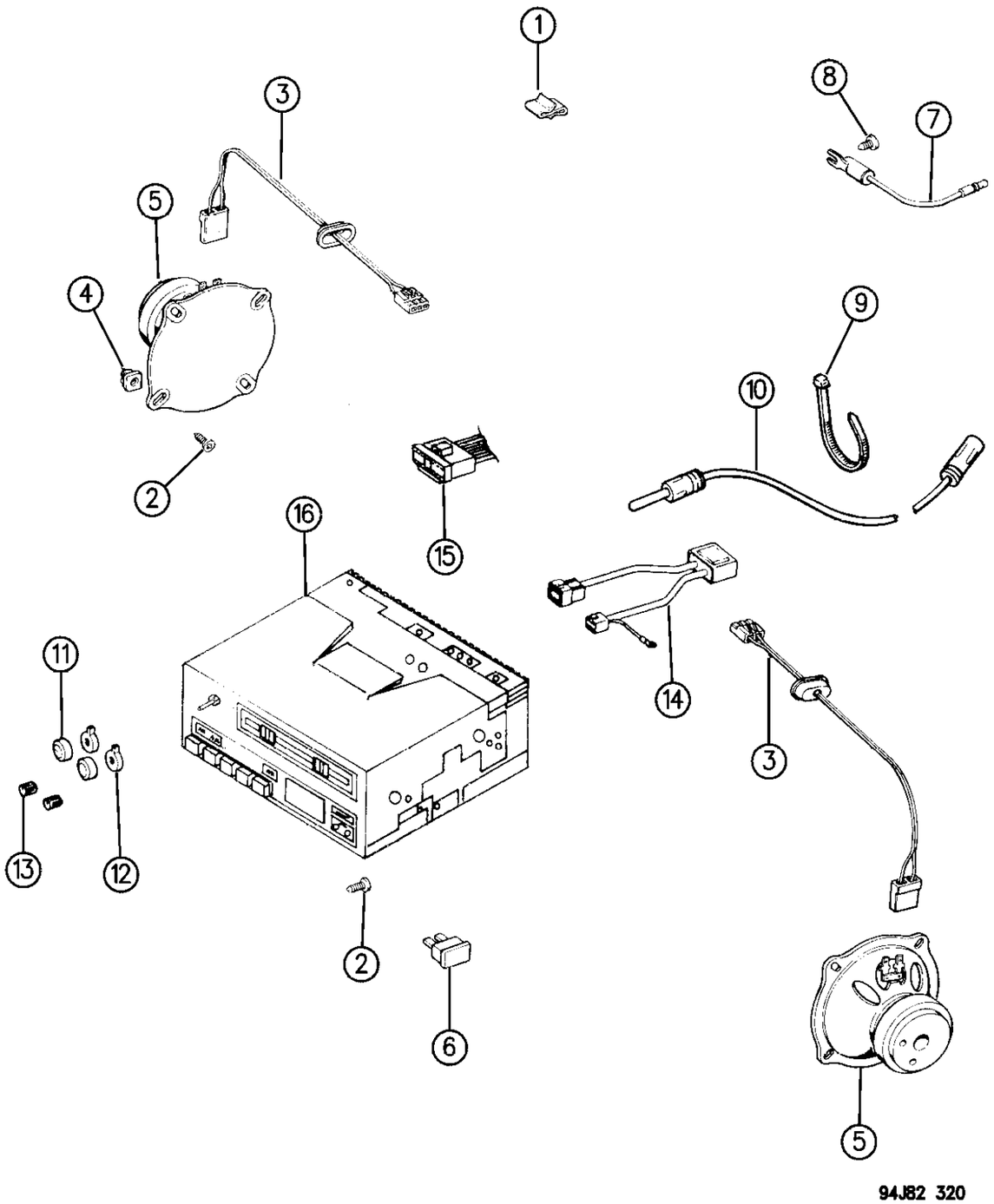

ITEM	PART NUMBER	QTY	BODY	MODEL	DESCRIPTION
1	J400 5963	1			CLIP
2	J448 9487	10			SCREW
3	5600 4900	2			WIRING, Speaker, w/o Power Locks or Windows
4	J400 5242	8			NUT
5	5600 1880	2			SPEAKER, Door
6	J323 1213	1			FUSE, 5 Ampere
7		1			CAPACITOR, Ignition (Not Serviced)
8	3420 1895	1			SCREW
9	6015 756	1			STRAP
10	5600 2952	1			CABLE, Antenna
11		1			KNOB, Radio Volume
	4728 151				(RAY)
	8350 7040				(RAF)
12		1			KNOB, Fader
	8350 7078				(RAF)
13	8350 7042	2			KNOB, Bass/Treble w/Cass.
14	5600 3160	1			WIRING, Jumper, KDX-CHINA
15	8350 6510	AR			WIRING, Radio Repair
16					RADIO, Also See Accessory Catalog
	5600 7519	1			Am/Fm ETR Stereo w/Clock (RAB)
	5600 7214	1			Am/Fm Cassette w/Clock (RAF)
	5600 6833	1			Stereo Cassette EUROPE ***
-		1			HOUSING, Speaker Mounting (Rear)
	LB63 PS1				Charcoal
	LB63 PY6				Sand

MODEL CODES:

72=2 DR Wagon
74=4 DR Wagon
77=Open Body 93" Whlbase
78=Open Body 103" Whlbase - Export
T=2WD
J,N=4WD
U=4WD (RHD)

BODY STYLES:

YJ=Wrangler (4X4) "S"
Weangler (4X4) SE
Wrangler (4X4) Sahara
Wrangler (4X4) Renegade
XJ=Cherokee SE
Cherokee Sport
Cherokee Country
ZJ=Grand Cherokee SE
Grand Cherokee Laredo
Grand Cherolee Limited
ZG=Grand Cherokee European
Y1=Wrangler
X1=Cherokee
Z1=Grand Cherokee
KDX=Vehicles

AR = Use as Required - = Non Illustrated Part P.A.R. = Paint as Required

« RETURN TO GROUP INDEX

RADIO AND SPEAKERS FOUR AND SIX SPEAKER SYSTEM CHEROKEE AND GRAND CHEROKEE
Figure 8A-324

8A-324

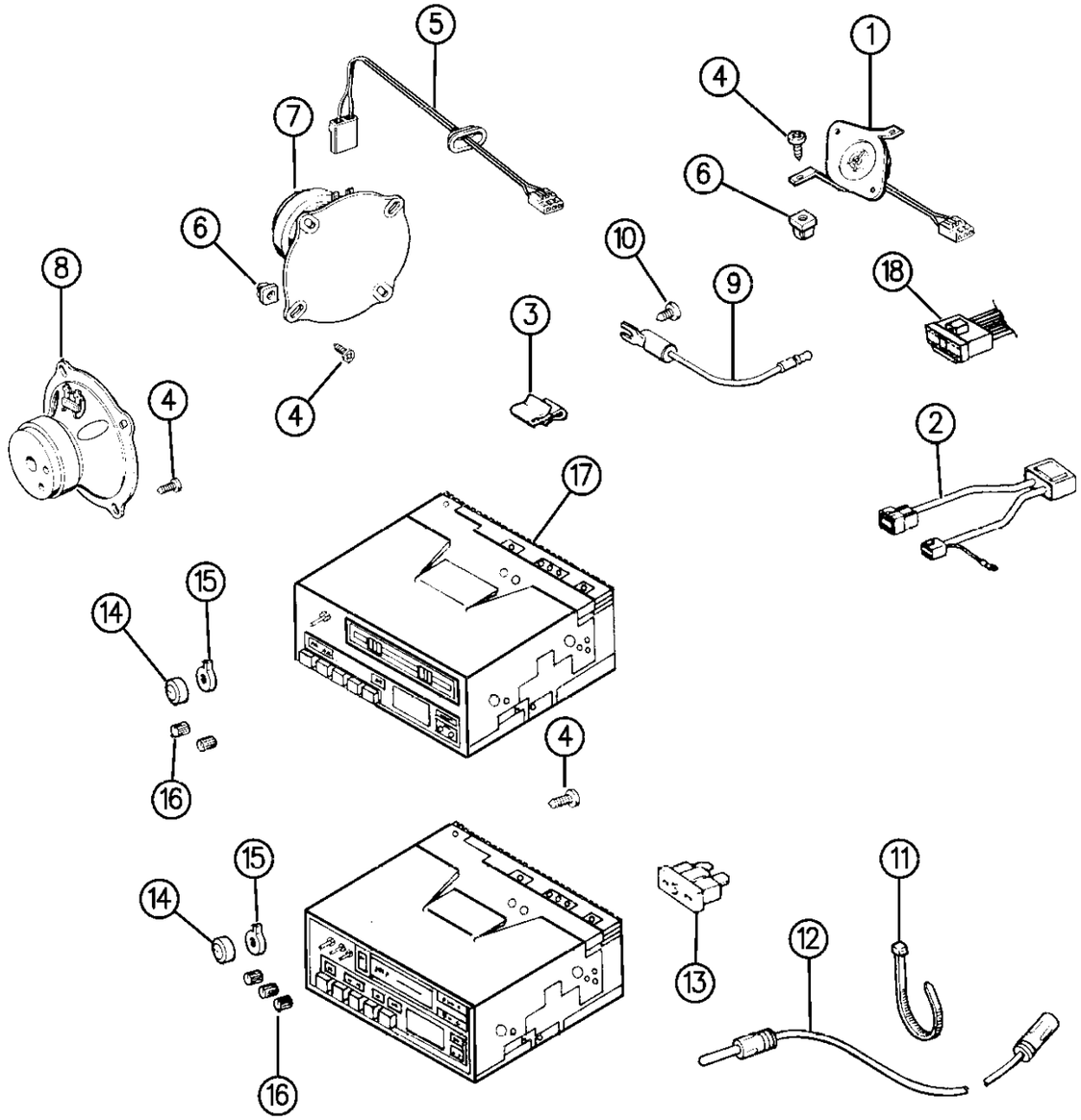

ITEM	PART NUMBER	QTY	BODY	MODEL	DESCRIPTION
1			XJ		SPEAKER, Instrument Panel
	3600 1123	1			Right
	5600 2013	1			Left
	5600 6935	2	ZJ		1994-95 ***
	5604 2100	2	ZJ		1996 ***
2	5600 3160	1			HARNESS, Jumper KDX-China
3	J400 5963	2			CLIP
4	J448 9487	18			SCREW
5	5600 4900	2			HARNESS, Speaker, w/o Power Locks or Windows
6	J400 5242	8			NUT
7					SPEAKER, Door Front
	5600 1880	2			w/o D.N.R.
	5600 5005	2	ZJ		1994-94 ***
	5600 7349	2	ZJ		1996 ***
	3600 1124	2			w/D.N.R.
	5600 8731	2	ZJ		
8					SPEAKER, Rear Door
	5600 5005	2	ZJ		w/o D.N.R.
		2	ZJ		w/D.N.R
	5600 8730				1994
	5600 9340				1995-96
					SPEAKER, Liftgate
	3600 1125	2	XJ		w/D.N.R.
		1			SPEAKER, Sound Bar
	5600 1879	AR			Up to 11/01/94 (Standard)
	3600 1125	AR			Up to 11/01/94 (Premium)
	5600 9045	AR			After 11/01/94 (Standard or Premium)
	4762 955	AR			GRILLE, Speaker (Headliner)
-	5521 6704	AR			NAMEPLATE, Speaker ("Infinity Gold")
9	J322 9510	1			CAPACITOR, Ignition
10	3420 1895	1			SCREW
11	6015 756	1			STRAP
12	5600 2952	1			CABLE, Antenna
13					FUSE
	J323 1211	1			3 Ampere
	J323 1213	1			5 Ampere
14		AR			KNOB
		1			Volume
	4762 172				(RAY)
	4741 435				(RBC)
	4762 158				(RAS)
	8350 7040				(RAF)

MODEL CODES:

72=2 DR Wagon
74=4 DR Wagon
77=Open Body 93" Whlbase
78=Open Body 103" Whlbase - Export
T=2WD
J,N=4WD
U=4WD (RHD)

BODY STYLES:

YJ=Wrangler (4X4) "S"
Weangler (4X4) SE
Wrangler (4X4) Sahara
Wrangler (4X4) Renegade
XJ=Cherokee SE
Cherokee Sport
Cherokee Country
ZJ=Grand Cherokee SE
Grand Cherokee Laredo
Grand Cherolee Limited
ZG=Grand Cherokee European
Y1=Wrangler
X1=Cherokee
Z1=Grand Cherokee
KDX=Vehicles

AR = Use as Required - = Non Illustrated Part P.A.R. = Paint as Required

RADIO AND SPEAKERS FOUR AND SIX SPEAKER SYSTEM CHEROKEE AND GRAND CHEROKEE
Figure 8A-324

8A-324

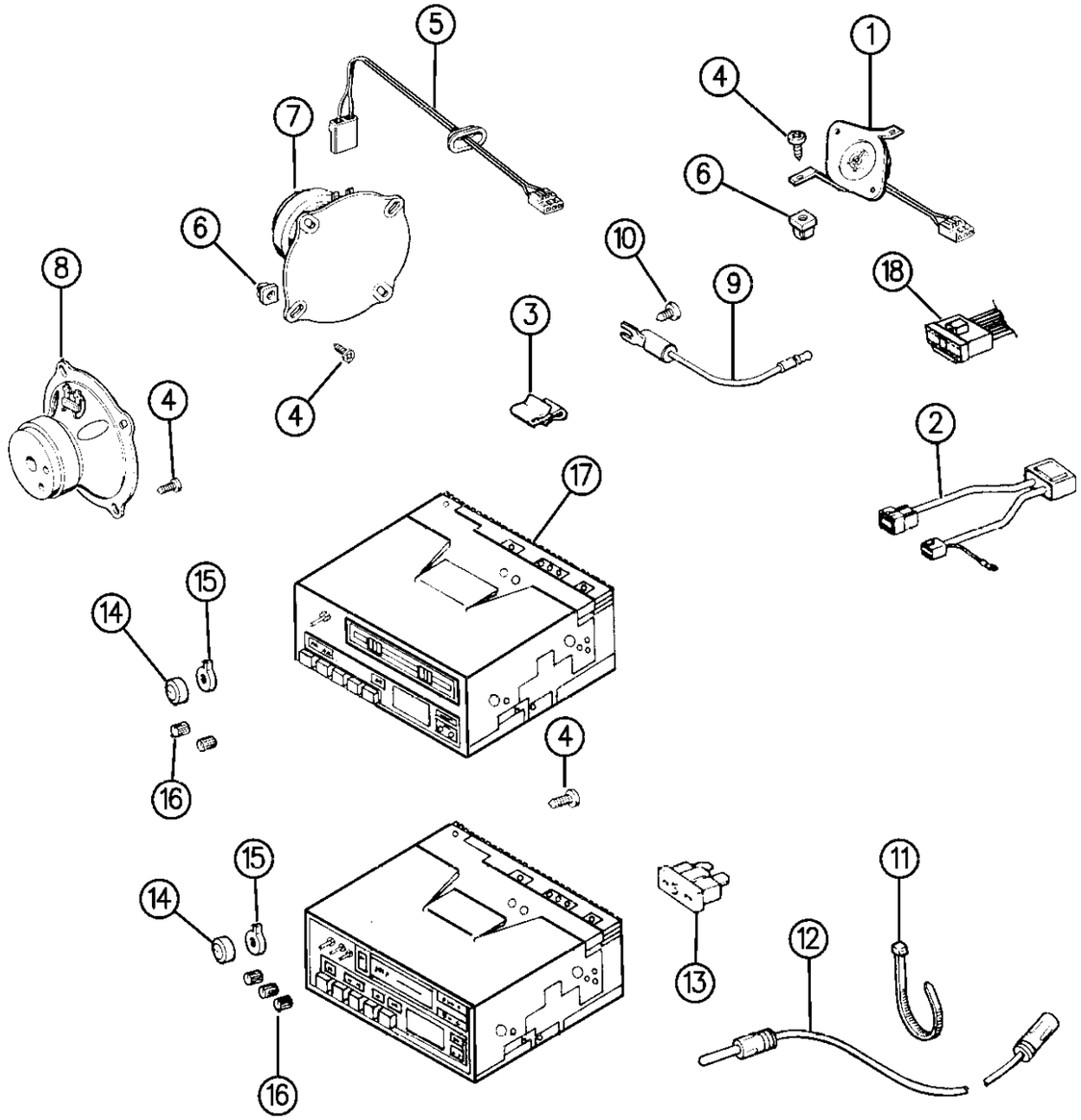

ITEM	PART NUMBER	QTY	BODY	MODEL	DESCRIPTION
		1			Joystick
	4762 176				(RAY)
	4741 436				(RBC) 1994
	4886 083AA				(RBC) 1995-96
		1			Equilizer
	4762 174				(RAY)
	4741 437				(RBC)
		1			Balance
	4762 159				(RAS)
		1			Tune
	4762 160				(RAS)
15		1			KNOB, Fader
	4762 161				(RAS)
	8350 7078				(RAF)
16	4762 157	2			KNOB, Bass/Treble (RAS)
17					RADIO
	4858 517	1	ZJ		Radio w/Am/Fm/Cassette/CD (RAZ)
	5600 7519	1			AM/FM ETR Stereo w/Clock (RAB)
	5600 7214	1			AM/FM w/Cassette w/Clock (RAF)
	5600 6833	1			AM/FM w/Cassette Europe
	5600 6760	1	ZJ		AM/FM MPX Cassette (RAS)
	5269 480	1	ZJ		Radio w/Equalizer and CD (RBC)
	5269 482	1	ZJ		Radio w/Equalizer and Cassette (RAY)
	5269 488	1	ZJ		Radio Assembly, Blue/Blue Light (EUROPE) RBL 1994-95
	4704 345				1996 (RBL) EUROPE
	5600 6932	1	ZJ		AM/FM Stereo Cassette
		1			AMPLIFIER ASSEMBLY (Infinity) ***
	5600 8993				1994-95
	5600 7499				1996
18	8350 6510	AR	XJ		HARNESS, Radio Repair
-	5600 7524	2	ZJ		GROUND-STRAP, Radio Supression ***

D.N.R. (Dynamic Noise Reduction)

NOTE: ZJ uses "Chrysler" Radio XJ uses "Jeep" Radio

MODEL CODES:

72=2 DR Wagon
74=4 DR Wagon
77=Open Body 93" Whlbase
78=Open Body 103" Whlbase - Export
T=2WD
J,N=4WD
U=4WD (RHD)

BODY STYLES:

YJ=Wrangler (4X4) "S"
Weangler (4X4) SE
Wrangler (4X4) Sahara
Wrangler (4X4) Renegade
XJ=Cherokee SE
Cherokee Sport
Cherokee Country
ZJ=Grand Cherokee SE
Grand Cherokee Laredo
Grand Cherolee Limited
ZG=Grand Cherokee European
Y1=Wrangler
X1=Cherokee
Z1=Grand Cherokee
KDX=Vehicles

AR = Use as Required - = Non Illustrated Part P.A.R. = Paint as Required

ANTENNA CHEROKEE
Figure 8A-330

8A-330A

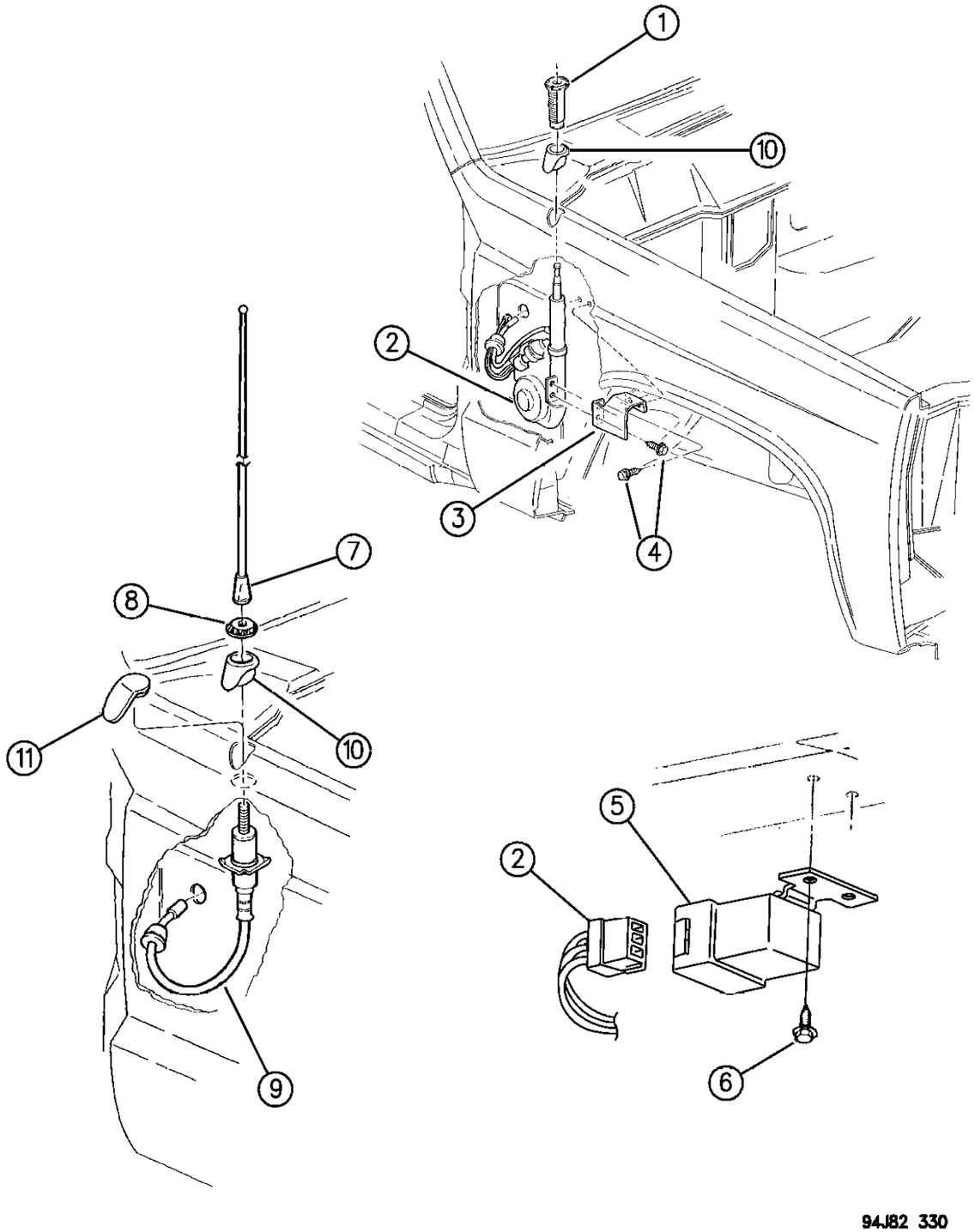

ITEM	PART NUMBER	QTY	BODY	MODEL	DESCRIPTION
1	5600 0552	1			ESCUTCHEON, Power Antenna Mounting
2	5600 3151	1			ANTENNA ASSEMBLY, Power
3	5600 7107	1			BRACKET, Power Antenna Lower Mounting
4	3420 1522	4			SCREW, Hex Flange Head m4.8x1.59x8.00
5	3600 3031	1			RELAY, Power Antenna
6	6503 491	2			SCREW, Hex Flange m4.8x1.59x16.00
7	8220 0031	1			MAST PACKAGE, Radio Antenna
8	5600 0506	1			CAPNUT, Antenna ***
9	5600 0282	1			BASE, w/Cable
10	5600 1183	1			PAD, Antenna Mounting
11	5600 1184	1			COVER, Antenna Hole (Front Fender)

MODEL CODES:

72=2 DR Wagon
74=4 DR Wagon
77=Open Body 93" Whlbase
78=Open Body 103" Whlbase - Export
T=2WD
J,N=4WD
U=4WD (RHD)

BODY STYLES:

YJ=Wrangler (4X4) "S"
Weangler (4X4) SE
Wrangler (4X4) Sahara
Wrangler (4X4) Renegade
XJ=Cherokee SE
Cherokee Sport
Cherokee Country
ZJ=Grand Cherokee SE
Grand Cherokee Laredo
Grand Cherolee Limited
ZG=Grand Cherokee European
Y1=Wrangler
X1=Cherokee
Z1=Grand Cherokee
KDX=Vehicles

AR = Use as Required - = Non Illustrated Part P.A.R. = Paint as Required

« RETURN TO GROUP INDEX

ANTENNA GRAND CHEROKEE
Figure 8A-340

8A-340A

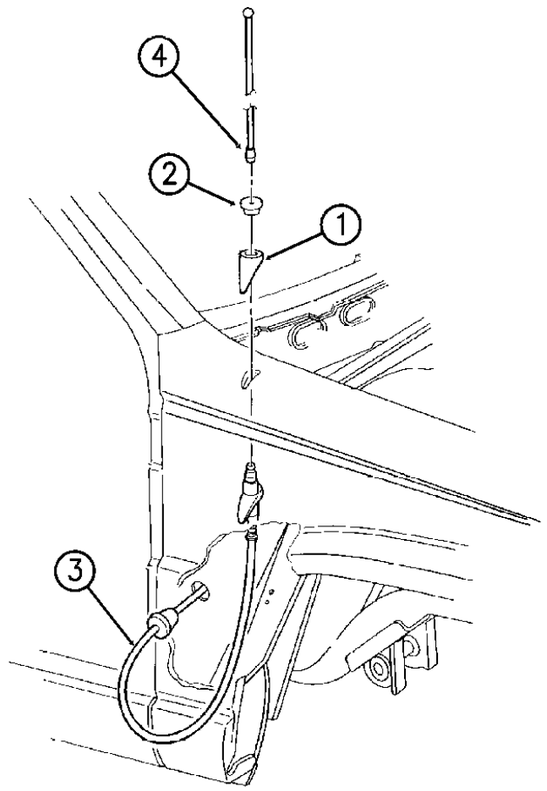

94J82 340

ITEM	PART NUMBER	QTY	BODY	MODEL	DESCRIPTION
1	5600 7173	1			ESCUTCHEON, Antenna
2					CAPNUT, Antenna ***
		1			Power Antenna
	5600 7295				Up to 02/28/94
	5600 7376				After 02/28/94
	5600 6828	1			Fixed Antenna
3	5600 7363	1			BASE w/LEAD ASSEMBLY, Fixed Antenna ***
	5600 5500	1			CABLE, Antenna Adapter to Radio
4	8220 0031	1			MAST PACKAGE, Radio Antenna
-		1			ANTENNA ASSEMBLY, Power
	5600 7174				Up to 02/28/94
	5600 7374				After 02/28/94
	5604 2062				1996
		1			MAST REPAIR KIT ***
	4741 282				Up to 02/28/94
	4773 086				After 02/28/94
-	6101 603	2			SCREW, Hex Flange m6x1.0x20.0
-	3600 3031	1			RELAY, Power Antenna
-	5600 5500	1			CABLE, Antenna
-	6503 491	2			SCREW, Hex Flange Head m4.8x1.59x16.0

MODEL CODES:

72=2 DR Wagon
74=4 DR Wagon
77=Open Body 93" Whlbase
78=Open Body 103" Whlbase - Export
T=2WD
J,N=4WD
U=4WD (RHD)

BODY STYLES:

YJ=Wrangler (4X4) "S"
Weangler (4X4) SE
Wrangler (4X4) Sahara
Wrangler (4X4) Renegade
XJ=Cherokee SE
Cherokee Sport
Cherokee Country
ZJ=Grand Cherokee SE
Grand Cherokee Laredo
Grand Cherolee Limited
ZG=Grand Cherokee European
Y1=Wrangler
X1=Cherokee
Z1=Grand Cherokee
KDX=Vehicles

AR = Use as Required - = Non Illustrated Part P.A.R. = Paint as Required

CONSOLE, FLOOR WRANGLER YJ
Figure 8A-410

8A-410

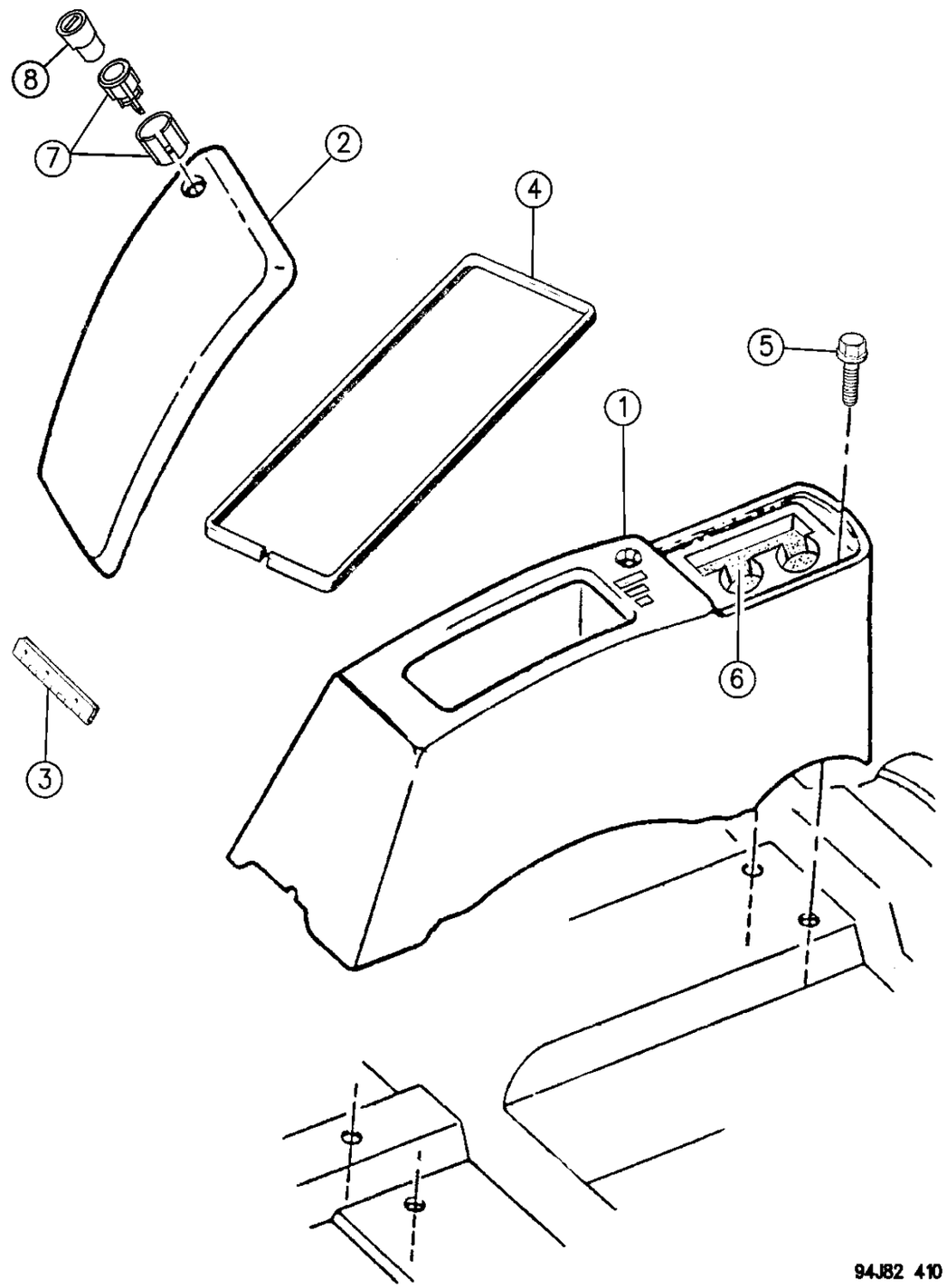

ITEM	PART NUMBER	QTY	BODY	MODEL	DESCRIPTION
1					BASE, Console
	4636 719	1			Cinder
	4713 328	1			Green
	4713 329	1			Spice
2					LID, w/Latch and Cylinder Case
	4636 721	1			Cinder
	4713 330	1			Green
	4713 331	1			Spice
3	4636 712	1			HINGE, Lid
4	4636 711	1			SEAL, Lid
5	J943 1948	4			SCREW
6	4636 713	1			MAT
7	4741 954	1			CASE, Cylinder (W/Retainer)
8	4746 305	1			CYLINDER, Lock

MODEL CODES:

72=2 DR Wagon
74=4 DR Wagon
77=Open Body 93" Whlbase
78=Open Body 103" Whlbase - Export
T=2WD
J,N=4WD
U=4WD (RHD)

BODY STYLES:

YJ=Wrangler (4X4) "S"
Weangler (4X4) SE
Wrangler (4X4) Sahara
Wrangler (4X4) Renegade

XJ=Cherokee SE
Cherokee Sport
Cherokee Country

ZJ=Grand Cherokee SE
Grand Cherokee Laredo
Grand Cherolee Limited
ZG=Grand Cherokee European

Y1=Wrangler
X1=Cherokee
Z1=Grand Cherokee
KDX=Vehicles

AR = Use as Required - = Non Illustrated Part P.A.R. = Paint as Required

« RETURN TO GROUP INDEX

CONSOLE CHEROKEE
Figure 8A-420

8A-420B

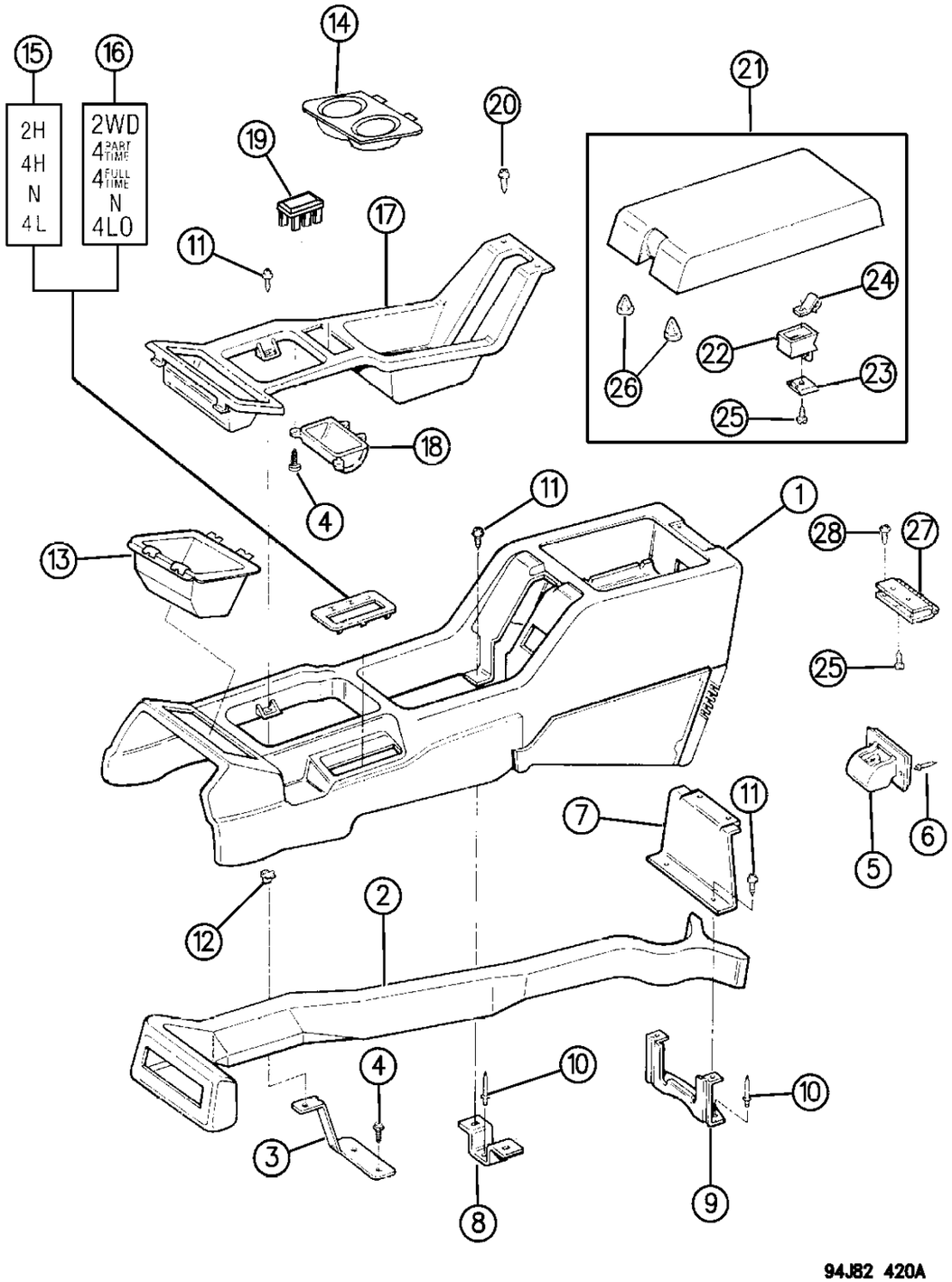

ITEM	PART NUMBER	QTY	BODY	MODEL	DESCRIPTION
1	4638 404	1			BASE, Console
2	5500 1303	1			DUCT, Rear Heater
3	5300 0812	1			BRACKET, Manual Trans.
4	1150 2843	6			SCREW
5	5AC3 5JY6	1			RECEIVER, Ash
6	3420 1197	2			RIVET
7	5500 1294	1			REINFORCEMENT
8	5500 1307	1			BRACKET, Center
9	5500 1308	1			BRACKET, Rear
10	3420 1197	4			RIVET
11	3420 1314	6			SCREW
12	3420 1509	2			CLIP
13	5500 1391	1			BOX, Storage
14	5511 5020	1			CUPHOLDER ***
15					BEZEL, Transfer Case 4WD
	5500 5175	1			Left Hand Drive
	5511 4944	1			Right Hand Drive
-	5AD9 3JY6	1			BEZEL, Without Transfer Case
16		1			BEZEL, Transfer Case 4WD
	5502 0094				LHD
	5502 7707				RHD
17					COVER, Shift, P.A.R.
	5511 4998	1			w/o H/Lamp Leveling Device Switch
	5511 5000				EUROPE
18	5500 3281	1			CUP, Coin Retainer ***
19		AR			PLUG, Plastic (Used w/o Cupholder)
	5DH5 8LA8				Drk. Charcoal
	5DH5 8LY6				Drk. Sand
20	3420 1286	2			SCREW
21		1			COVER, Storage
	5AC5 3JA8				Dark Charcoal
	5AC5 3JY6				Dark Sand
22	5500 1299	1			LATCH, Storage Compartment
23	5500 1300	1			RETAINER, Latch
24	5500 1301	1			SPRING, Latch
25	3420 1510	5			SCREW
26	3420 1902	2			BUMPER, Cover
27	5500 1302	1			HINGE, Cover
28	J448 9487	3			SCREW

MODEL CODES:

72=2 DR Wagon
74=4 DR Wagon
77=Open Body 93" Whlbase
78=Open Body 103" Whlbase - Export
T=2WD
J,N=4WD
U=4WD (RHD)

BODY STYLES:

YJ=Wrangler (4X4) "S"
Weangler (4X4) SE
Wrangler (4X4) Sahara
Wrangler (4X4) Renegade
XJ=Cherokee SE
Cherokee Sport
Cherokee Country
ZJ=Grand Cherokee SE
Grand Cherokee Laredo
Grand Cherolee Limited
ZG=Grand Cherokee European
Y1=Wrangler
X1=Cherokee
Z1=Grand Cherokee
KDX=Vehicles

AR = Use as Required - = Non Illustrated Part P.A.R. = Paint as Required

« RETURN TO GROUP INDEX

CONSOLE GRAND CHEROKEE
Figure 8A-430

8A-430

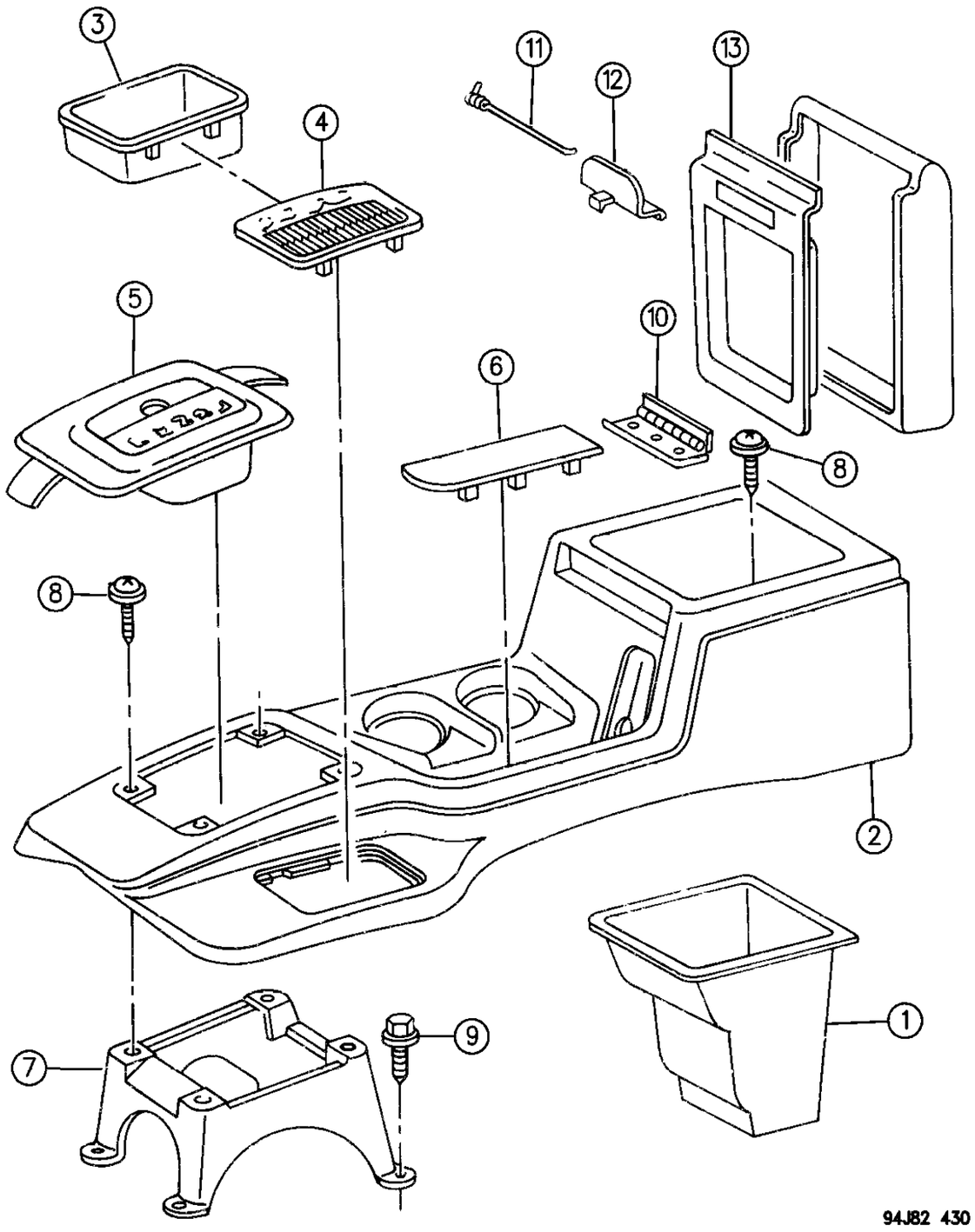

ITEM	PART NUMBER	QTY	BODY	MODEL	DESCRIPTION
1		1			BIN
	4638 400				1994-95
	5511 5230				1996
2		1			BASE (P.A.R.) ***
					1994-95
	4740 820				Smooth/Grain Finish (Two-Tone)
	PE89 RD5				Grain Finish (Monotone)
					1996
	5DY0 5SAZ				Agate
	5DY0 5SC3				Mist Gray
	5DY0 5ST6				Saddle
	6032 838	3			Clip
3	5503 0314	1			COVER
4		1			BEZEL Transfer Case
	5502 7662				w/231 (1994-95)
	5502 7663				w/242 (1994-95)
	5511 5772				w/242 (1996)
	5502 7664				w/249 (1994-95)
	5511 5773				w/249 (1996)
5		1	ZJ		BEZEL
	5511 5610				P R (D) 2 1 Shift Pattern (1994-95)
	5511 5774				1996
6	5EP1 4SAZ	1			BEZEL, Park Brake (Agate) P.A.R.
7	5511 6124	1			BRACKET
8					SCREW (DNS) Tapping, Washer Head .190-16x.750 ***
9					SCREW (DNS) Self Piercing, Flange Head .190-16x.750 ***
10	4638 396	1			HINGE
	6032 838	3			CLIP, Console Lid Screws
11	4638 397	1			SPRING
12		1			LATCH
	4638 398				1994-95
					1996 (Serviced w/Lid)
13		1			LID
					1994-95
	4723 005				Quartz
	4723 006				Driftwood
	4740 413				Champagne
					1996 W/Cup Holders
	5DT4 6SAZ				Agate
	5DT4 6SC3				Mist Gray
	5DT4 6ST6				Saddle
	4773 169	AR			BUMPER, Console Lid

MODEL CODES:

72=2 DR Wagon
74=4 DR Wagon
77=Open Body 93" Whlbase
78=Open Body 103" Whlbase - Export
T=2WD
J,N=4WD
U=4WD (RHD)

BODY STYLES:

YJ=Wrangler (4X4) "S"
Weangler (4X4) SE
Wrangler (4X4) Sahara
Wrangler (4X4) Renegade
XJ=Cherokee SE
Cherokee Sport
Cherokee Country
ZJ=Grand Cherokee SE
Grand Cherokee Laredo
Grand Cherolee Limited
ZG=Grand Cherokee European
Y1=Wrangler
X1=Cherokee
Z1=Grand Cherokee
KDX=Vehicles

AR = Use as Required - = Non Illustrated Part P.A.R. = Paint as Required

« RETURN TO GROUP INDEX

SHIFT BEZELS CHEROKEE AND GRAND CHEROKEE
Figure 8A-440

8A-440A

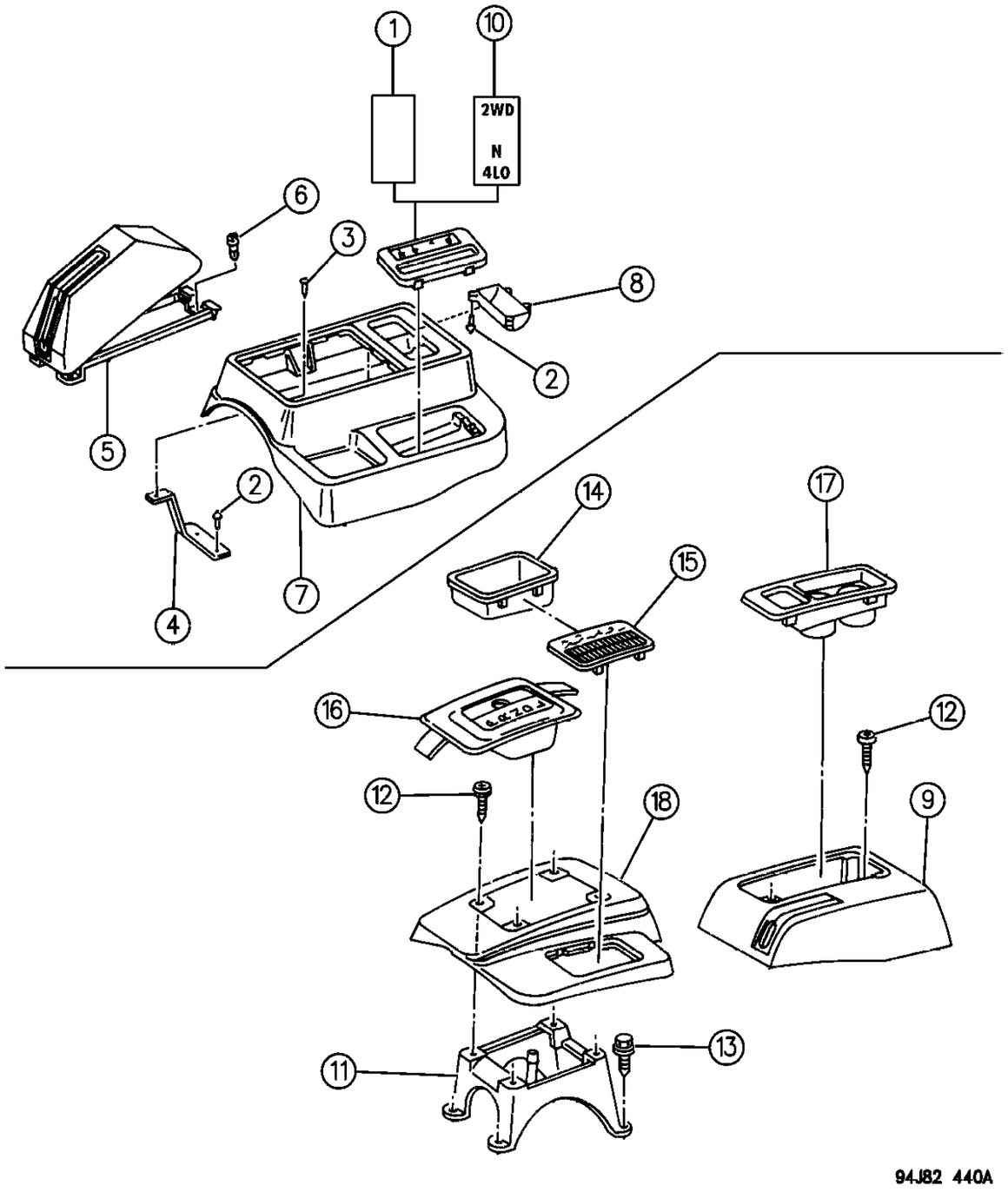

ITEM	PART NUMBER	QTY	BODY	MODEL	DESCRIPTION
1	5500 5175	1	XJ		BEZEL, Transfer Case, 4WD (Command Trac 231)
	5511 4944	1	XJ		RHD
	5AD9 2JY6	1			w/Police Package (AHB) P.A.R.
2	1150 2843	4			SCREW
3	3420 1314	AR			SCREW
4	5300 0812	1			BRACKET, Manual Trans.
5	5AC6 9JY6	1	XJ		COVER, Parking Brake, P.A.R.
6	J400 6633	3			SCREW
7	5BA6 9JY6	1			BEZEL, Shift, P.A.R.
8		1			CUP, Holder ***
	5511 4662		ZJ		
	5511 5020		XJ		
9	5CP4 8LD5	1	ZJ		COVER, Park Brake
10		1	XJ		BEZEL, Transfer Case, 4WD (Select Trac 242)
	5502 0094				LHD
	5502 7707		XJ		RHD
11	5511 6124	1	ZJ		BRACKET
12			ZJ		SCREW (DNS)
13			ZJ		SCREW (DNS)
14	5503 0314	1	ZJ		COVER
15			ZJ		BEZEL, Transfer Case
	5502 7662	1			w/231
	5502 7663	1			w/242
	5502 7664	1			w/249
16		1	ZJ		BEZEL
	5511 5064				P R (D) 1 2 3 Shift Pattern
	5511 5610				P R (D) 2 1 Shift Pattern
17	5511 4662	1	ZJ		HOLDER, Cup
18	5DK4 7LD5		ZJ		CONSOLE. Floor-Mini ***

MODEL CODES:

72=2 DR Wagon
74=4 DR Wagon
77=Open Body 93" Whlbase
78=Open Body 103" Whlbase - Export
T=2WD
J,N=4WD
U=4WD (RHD)

BODY STYLES:

YJ=Wrangler (4X4) "S"
Weangler (4X4) SE
Wrangler (4X4) Sahara
Wrangler (4X4) Renegade
XJ=Cherokee SE
Cherokee Sport
Cherokee Country
ZJ=Grand Cherokee SE
Grand Cherokee Laredo
Grand Cherolee Limited
ZG=Grand Cherokee European
Y1=Wrangler
X1=Cherokee
Z1=Grand Cherokee
KDX=Vehicles

AR = Use as Required - = Non Illustrated Part P.A.R. = Paint as Required

« RETURN TO GROUP INDEX

CONSOLE, OVERHEAD CHEROKEE
Figure 8A-450

8A-450A

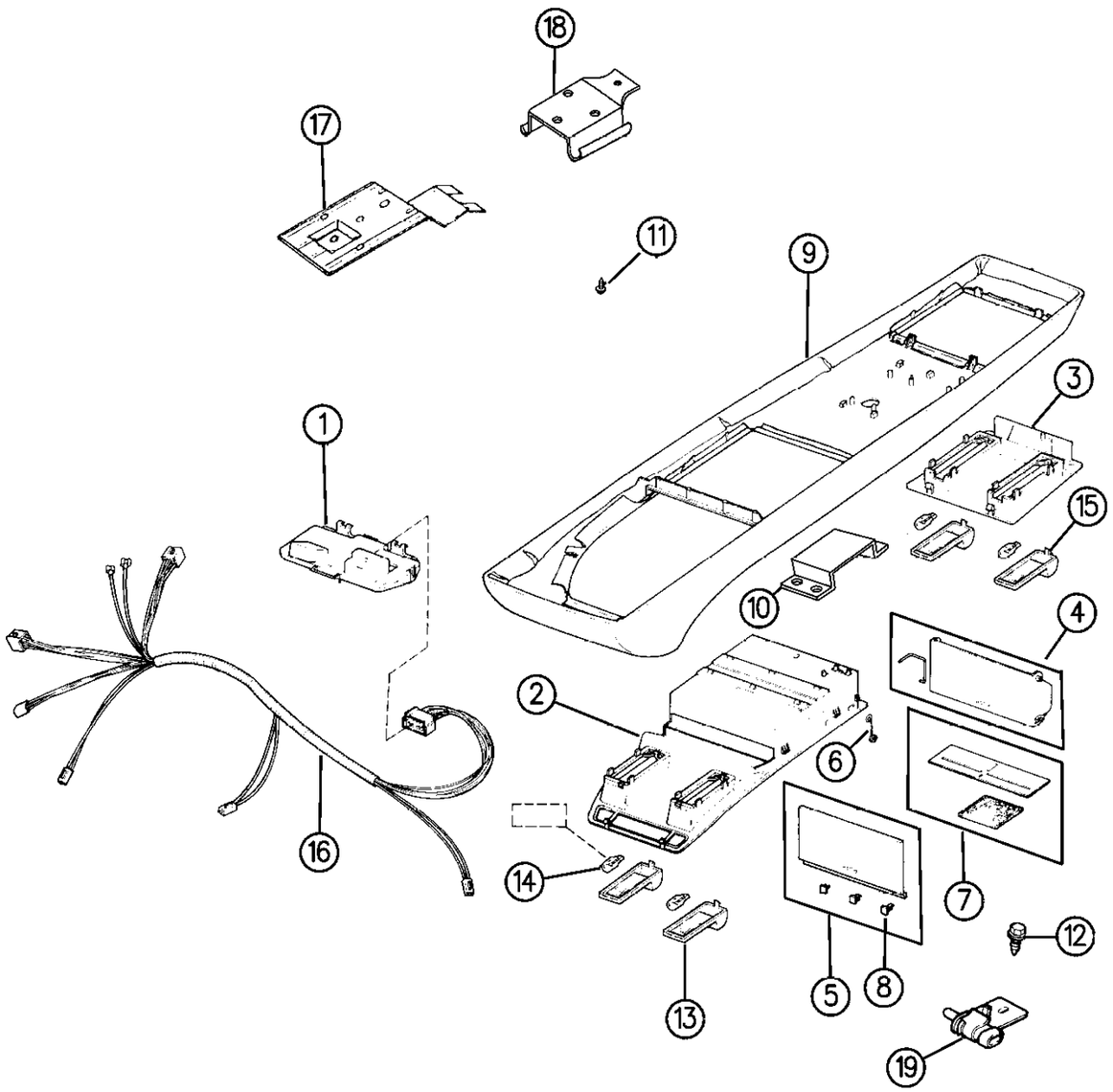

ITEM	PART NUMBER	QTY	BODY	MODEL	DESCRIPTION
1	5266 173	1			MODULE, Compass/Temperture
-	4728 962	1			WIRING & SOCKET ASSEMBLY, Overhead Console ***
2	4521 399	1			HOUSING
-	4798 913	AR			SCREW, Trim (Ferrule)
3	5502 7824	1			HOUSING, Rear
4	8350 6210	1			DOOR & SPRING, Sunglass Bin ***
5	4507 567	1			DOOR, Garage Door Opener
6	4409 911	1			SPRING
7	4309 345	1			FASTENER, Velcro Hook
8	4309 344	1			ADAPTER, Garage Door Button
9					HOUSING, Console
	4740 018	1			Charcoal
	4740 020	1			Dark Sand
-	4507 567	1			Serviced Kit (Garage Door Opener) ***
-	4741 817	1			SCREW, Mounting
10	5521 5595	1			COVER, Keyless Entry
11	6032 456	5			SCREW
12	1150 2843	1			SCREW
13	4507 896-7	1			LENS, Switch Front
14	9437 173	4			BULB, (912)
15	4507 584-5	1			LENS, Switch, Rear
16	5601 9148	1			HARNESS, Overhead Console
17	5503 3358	1			BRACKET, Front Mounting
18	5502 5816	1			BRACKET, Rear Mounting
19	4688 204	1			SENSOR, Outside Air Temp.

MODEL CODES:

72=2 DR Wagon
74=4 DR Wagon
77=Open Body 93" Whlbase
78=Open Body 103" Whlbase - Export
T=2WD
J,N=4WD
U=4WD (RHD)

BODY STYLES:

YJ=Wrangler (4X4) "S"
Weangler (4X4) SE
Wrangler (4X4) Sahara
Wrangler (4X4) Renegade
XJ=Cherokee SE
Cherokee Sport
Cherokee Country
ZJ=Grand Cherokee SE
Grand Cherokee Laredo
Grand Cherolee Limited
ZG=Grand Cherokee European
Y1=Wrangler
X1=Cherokee
Z1=Grand Cherokee
KDX=Vehicles

AR = Use as Required - = Non Illustrated Part P.A.R. = Paint as Required

« RETURN TO GROUP INDEX

CONSOLE, OVERHEAD GRAND CHEROKEE
Figure 8A-460

8A-460A

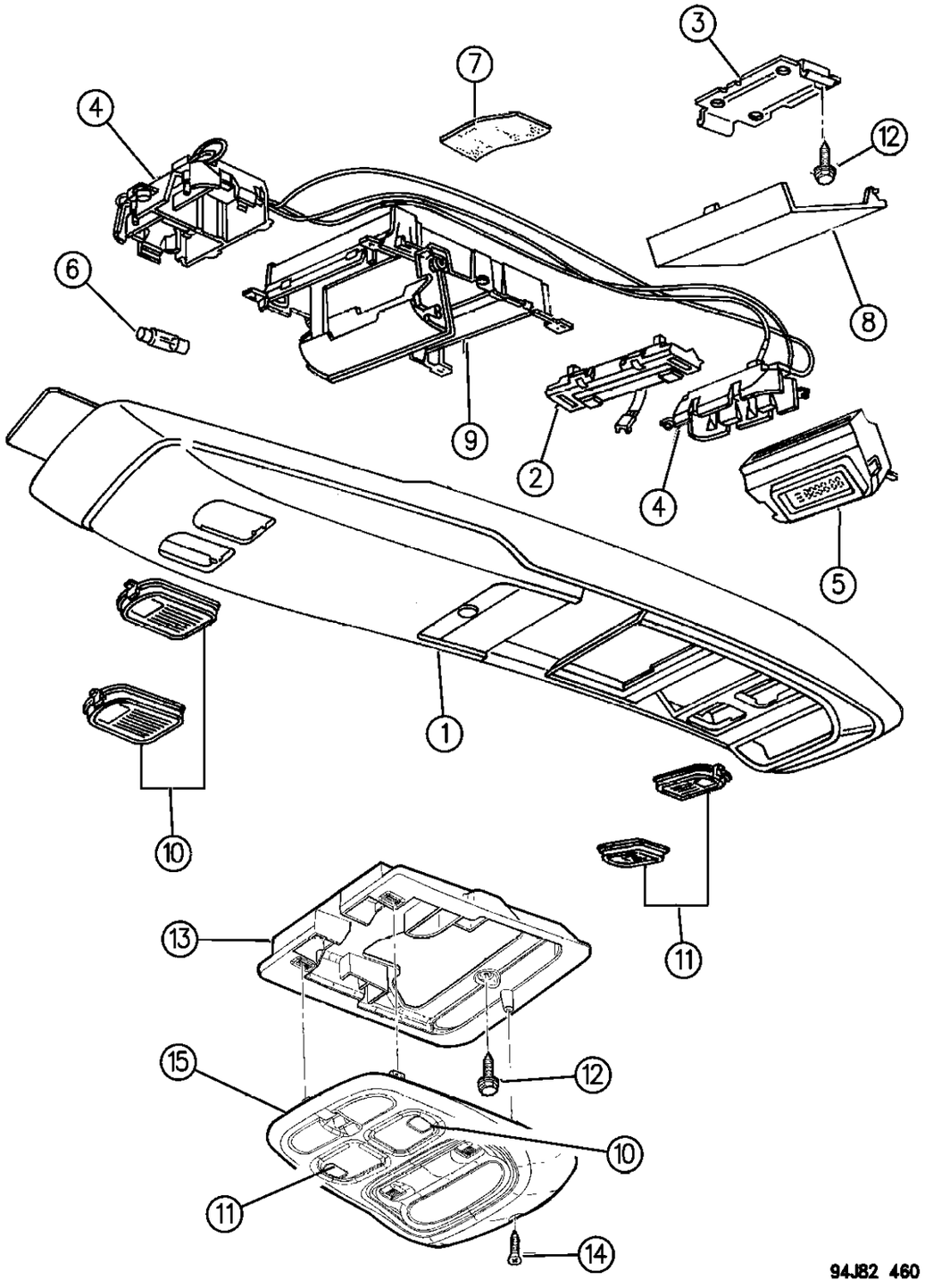

ITEM	PART NUMBER	QTY	BODY	MODEL	DESCRIPTION
1					HOUSING sales code CUN ***
	5CJ4 2LD5	1			Silver (contains Compass Lens)
	KS46 PF4	1			Light Driftwood
	KS46 PV4	1			Light Champagne 1994-95
	5CJ4 2LMA	1			Red 1994
	PL85 SAZ				Agate 1996
	PL85 SC1				Mist Gray (C3) 1996
	PL85 ST6				Spice 1996
	4741 817	2			SCREW, Console Mtg.
	4798 913	AR			SCREW, Trim (Ferrule)
	6035 828				NUT, Front Console Mounting
2		1			SWITCH, Push Button, Mini Trip (Include Socket/Bulb)
	5600 6956				Full Console
	4761 966				Mini Console
	4373 860	1			SWITCH (1-Gang) Mini Console ***
-	4773 572	AR			RETAINER, Switch (Mini Console)
	9436 790	AR			BULB (GE Type 73)(Socket/Bulb Service w/Switch) ***
3	5503 3850	1			BRACKET
4		1			HARNESS, Overhead Console
					Full Console
	5521 4857				1994-95
	4863 982				1996
	4773 569				Mini Console
5		1			MODULE, Temp./Compass/Minitrip
	5600 7488				1994
	5600 8719				1995
	5604 2177				1996
NOTES: Refer to Serviced Manual for Calibrating Module.					
6	9431 809	4			BULB, (212)
7	4547 583	1			KIT, Garage Door Opener Velcro ***
8		1			DOOR, Garage Door Opener
	5268 173				1994
	4761 965				1995-96
9		1			MODULE, Sunglass
	5268 174				1994-96
	4761 436				1996
10		1			LENS, Reading Rear
	5268 178				Right
	5268 177				Left
11		1			LENS, Reading Front
	5268 176				Right
	5268 175				Left

MODEL CODES:

72=2 DR Wagon
74=4 DR Wagon
77=Open Body 93" Whlbase
78=Open Body 103" Whlbase - Export
T=2WD
J,N=4WD
U=4WD (RHD)

BODY STYLES:

YJ=Wrangler (4X4) "S"
Weangler (4X4) SE
Wrangler (4X4) Sahara
Wrangler (4X4) Renegade
XJ=Cherokee SE
Cherokee Sport
Cherokee Country
ZJ=Grand Cherokee SE
Grand Cherokee Laredo
Grand Cherolee Limited
ZG=Grand Cherokee European
Y1=Wrangler
X1=Cherokee
Z1=Grand Cherokee
KDX=Vehicles

AR = Use as Required - = Non Illustrated Part P.A.R. = Paint as Required

CONSOLE, OVERHEAD GRAND CHEROKEE
Figure 8A-460

8A-460A

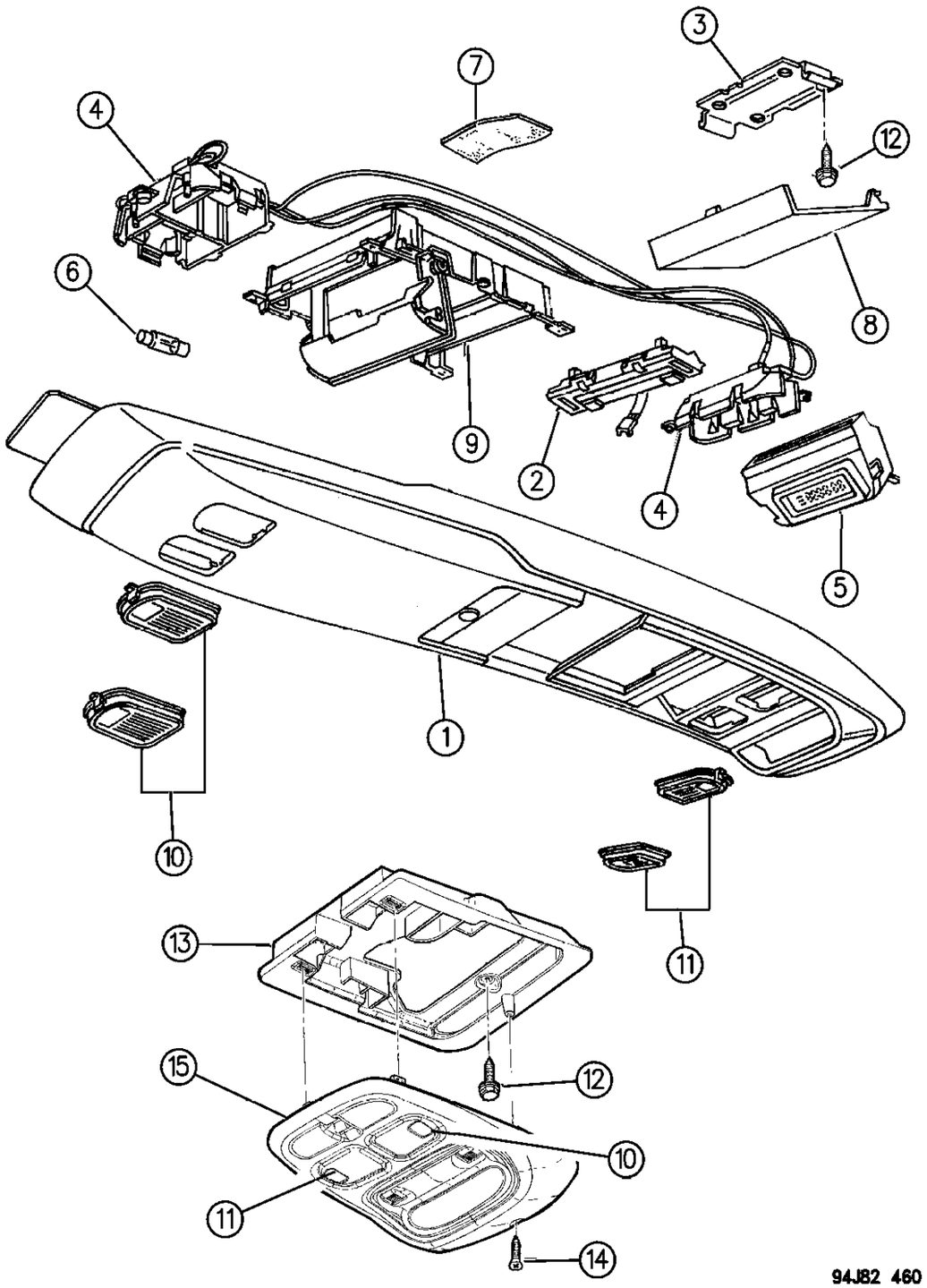

ITEM	PART NUMBER	QTY	BODY	MODEL	DESCRIPTION
12	0154 688	AR			SCREW
13	5521 6382	1			BRACKET, Mini Console
14		AR			SCREW (Not Serviced) ***
15		1			HOUSING ASSEMBLY, Mini Console (P.A.R.) with sales code CUD ***
	LE65 RD5				1994-96
-	4773 571	1			BEZEL, Display Lens
-	4773 573	AR			CLIP (Z-Axis) ***

MODEL CODES:

72=2 DR Wagon	77=Open Body 93" Whlbase	T=2WD	U=4WD (RHD)
74=4 DR Wagon	78=Open Body 103" Whlbase - Export	J,N=4WD	

BODY STYLES:

YJ=Wrangler (4X4) "S"	XJ=Cherokee SE	ZJ=Grand Cherokee SE	Y1=Wrangler
Weangler (4X4) SE	Cherokee Sport	Grand Cherokee Laredo	X1=Cherokee
Wrangler (4X4) Sahara	Cherokee Country	Grand Cherolee Limited	Z1=Grand Cherokee
Wrangler (4X4) Renegade		ZG=Grand Cherokee European	KDX=Vehicles

AR = Use as Required - = Non Illustrated Part P.A.R. = Paint as Required

SAGIPARTS

GROUP-9A
2.5L ENGINE

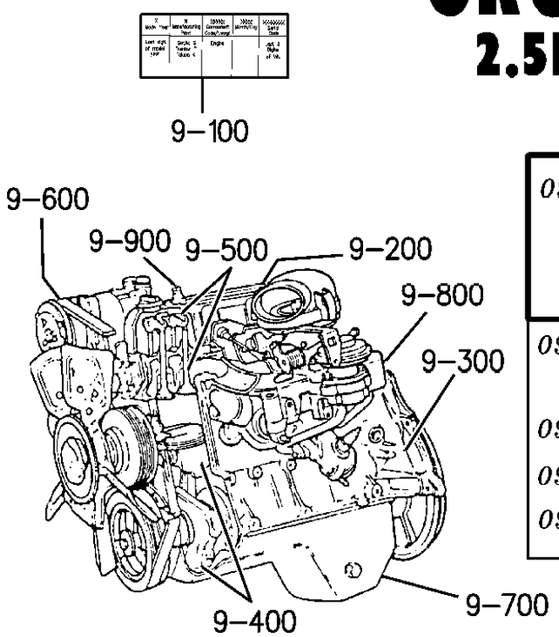

09A	(G) EDA = 2.5L ENGINE 4 CYL. (GAS) TBI
	(H) EPE = 2.5L ENGINE 4 CYL. (GAS) LEADED
	(P) EPE = 2.5L ENGINE 4 CYL. (GAS) UNLEADED
	(F) EPB = 2.5L ENGINE 4 CYL. (GAS) MPI
09B	(S) ERH UNLEADED = 4.0L ENGINE 6 CYL. (GAS) MPI
	(V) ERH LEADED = 4.0L ENGINE 6 CYL. (GAS) MPI
09C	(Y) ELF = 5.2L ENGINE 8 CYL. MPI
09D	(B) ENA = 2.1L ENGINE 4 CYL. DIESEL
09E	(M) ENC = 2.5L ENGINE 4 CYL. DIESEL

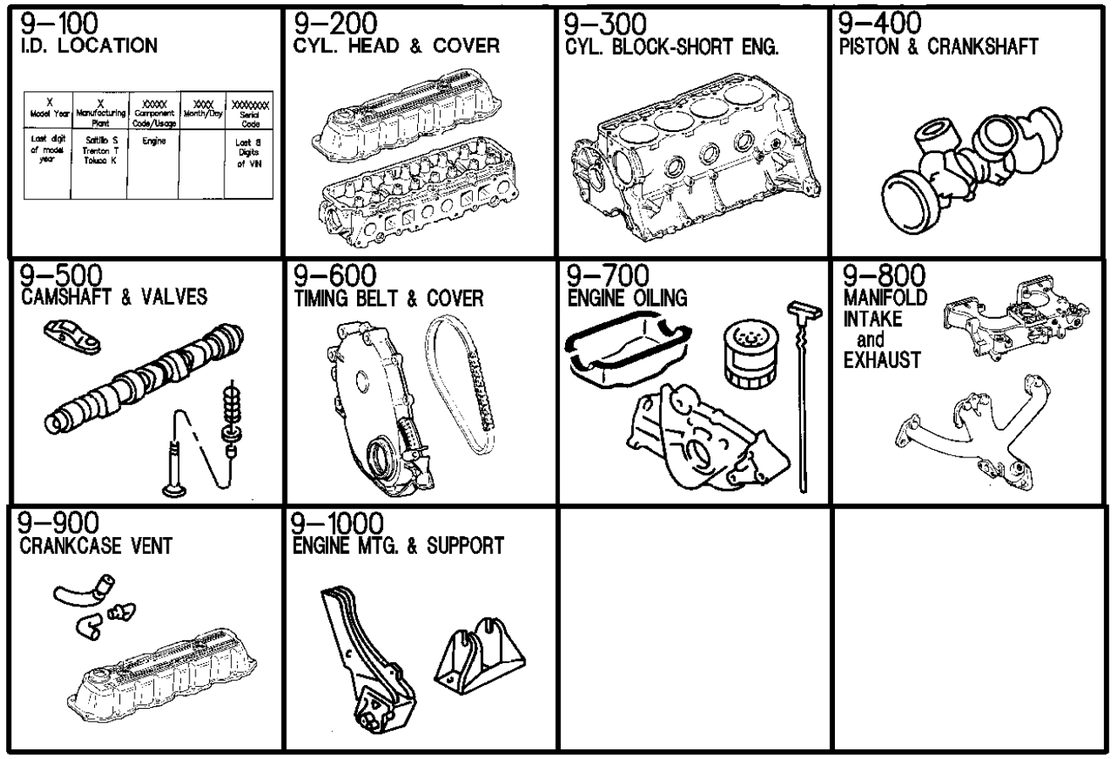

GROUP 9A - ENGINE, 4 CYLINDER

ILLUSTRATION TITLE	GROUP-FIG. NO.
I.D. LOCATION	
I.D. LOCATION 2.5L ENGINE	Fig. 9A-110
CYLINDER HEAD	
CYLINDER HEAD 2.5L ENGINE	Fig. 9A-210
CYLINDER BLOCK	
CYLINDER BLOCK 2.5L ENGINE	Fig. 9A-310
CRANKSHAFT, PISTON, AND TORQUE CONVERTER	
CRANKSHAFT, PISTON, AND TORQUE CONVERTER 2.5L ENGINE	Fig. 9A-410
CAMSHAFT AND VALVES	
CAMSHAFT AND VALVE 2.5L ENGINE	Fig. 9A-510
TIMING COVER	
TIMING COVER 2.5L ENGINE	Fig. 9A-610
ENGINE OILING	
ENGINE OILING 2.5L ENGINE	Fig. 9A-710
MANIFOLDS	
MANIFOLD, INTAKE AND EXHAUST 2.5L EFI ENGINE	Fig. 9A-810
MANIFOLD, INTAKE AND EXHAUST 2.5L CARBURETED ENGINE	Fig. 9A-820
CRANKCASE VENTILATION	
CRANKCASE VENTILATION 2.5L ENGINE	Fig. 9A-910
ENGINE MOUNTS	
ENGINE MOUNTING 2.5L ENGINE YJ BODY	Fig. 9A-1010
ENGINE MOUNTING 2.5L ENGINE XJ BODY	Fig. 9A-1020

I.D. LOCATION 2.5L ENGINE
Figure 9A-110

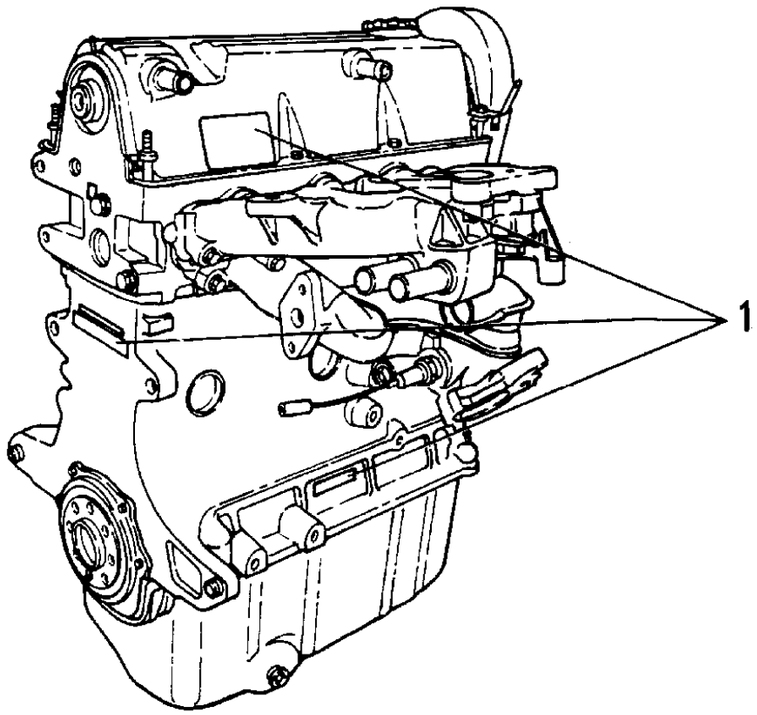

ITEM	PART NUMBER	QTY	BODY	MODEL	DESCRIPTION
1					I.D. LOCATION IS ON RIGHT FRONT SIDE OF ENGINE NEAR OIL FILTER. ***

MODEL CODES:

72=2 DR Wagon
74=4 DR Wagon
77=Open Body 93" Whlbase
78=Open Body 103" Whlbase - Export
T=2WD
J,N=4WD
U=4WD (RHD)

BODY STYLES:

YJ=Wrangler (4X4) "S"
Weangler (4X4) SE
Wrangler (4X4) Sahara
Wrangler (4X4) Renegade
XJ=Cherokee SE
Cherokee Sport
Cherokee Country
ZJ=Grand Cherokee SE
Grand Cherokee Laredo
Grand Cherolee Limited
ZG=Grand Cherokee European
Y1=Wrangler
X1=Cherokee
Z1=Grand Cherokee
KDX=Vehicles

AR = Use as Required - = Non Illustrated Part P.A.R. = Paint as Required

« RETURN TO GROUP INDEX

CYLINDER HEAD 2.5L ENGINE
Figure 9A-210

9A-210C

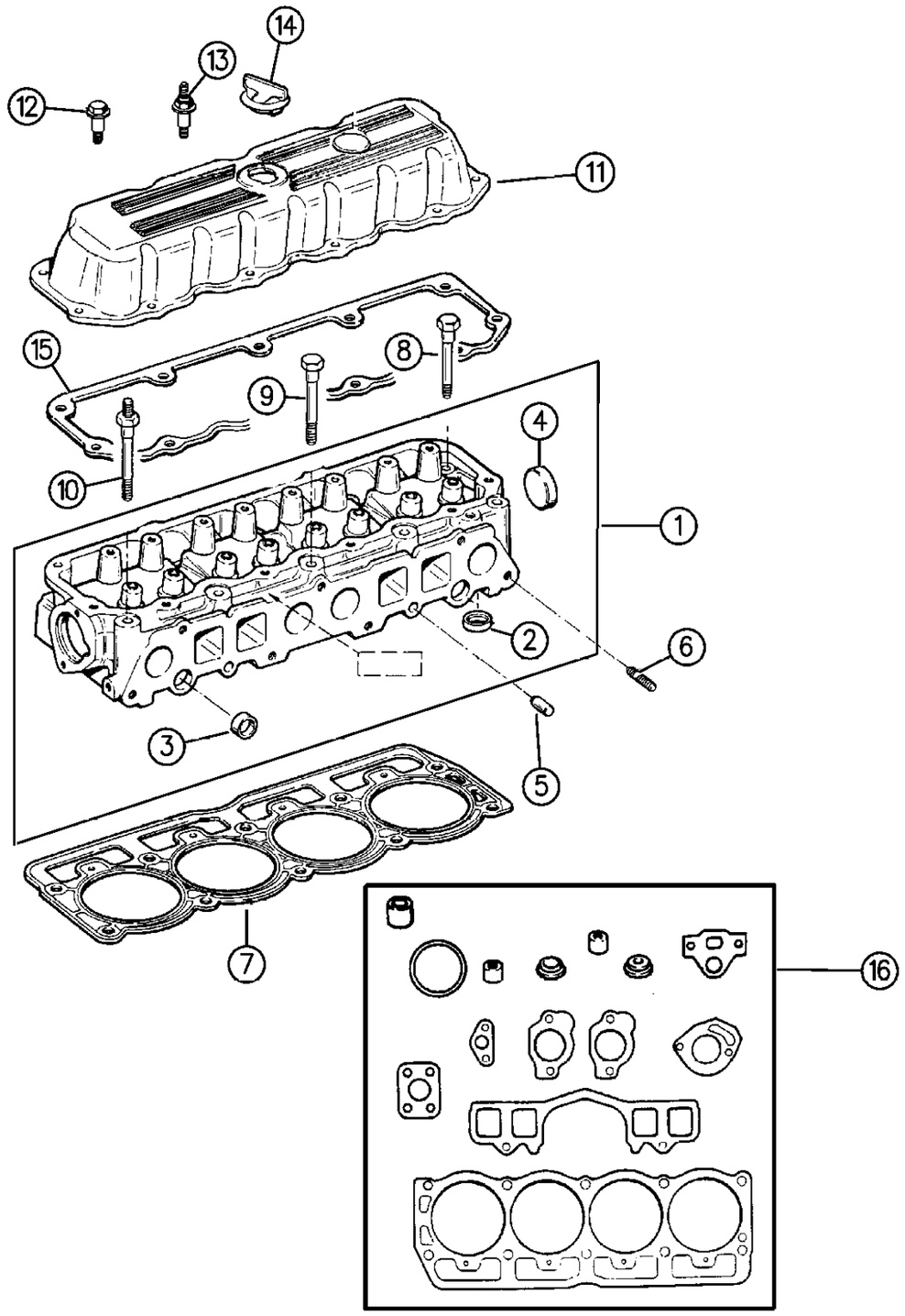

ITEM	PART NUMBER	QTY	BODY	MODEL	DESCRIPTION
1					HEAD, Cylinder, Injected
	3300 7115	1			
	5302 0183	1		X1	
2	3300 7142	4			SEAT, Exhaust Valve
3	J317 2319	4			PLUG, (.875)
4	J310 5394	1			PLUG, (2.00)
5	J317 2318	2			PIN
6	5301 0165	2			STUD, Exhaust Manifold
7	5300 9549	1			GASKET, Cylinder Head
8	J400 7308	5			BOLT, (3.75)
9	J400 7307	1			BOLT, (4.52)
10	J400 7310	AR			BOLT/STUD ***
11	5301 0428	1			COVER, Cylinder Head, (w/Sealant)
12					BOLT, Cover
	6034 478	8			1994-95
	6035 566	10			1996, (250-20-1.00)
13					STUD
	6034 477	3			1994-95, (.250-20x1.970)
	6035 567	7			1996, (.250-20x2.00)
14	5302 0555	1			CAP, Oil Filler
15					GASKET, Cylinder Head Cover
	5093 826AA	1			Gasket, 1994
	4318 025	AR			RTV Sealant
		1			Non-KDX, (Serviced in Rocker Cover)
16	4798 992	1			GASKET PKG, Engine Upper ***

MODEL CODES:

72=2 DR Wagon
74=4 DR Wagon
77=Open Body 93" Whlbase
78=Open Body 103" Whlbase - Export
T=2WD
J,N=4WD
U=4WD (RHD)

BODY STYLES:

YJ=Wrangler (4X4) "S"
Weangler (4X4) SE
Wrangler (4X4) Sahara
Wrangler (4X4) Renegade
XJ=Cherokee SE
Cherokee Sport
Cherokee Country
ZJ=Grand Cherokee SE
Grand Cherokee Laredo
Grand Cherolee Limited
ZG=Grand Cherokee European
Y1=Wrangler
X1=Cherokee
Z1=Grand Cherokee
KDX=Vehicles

AR = Use as Required - = Non Illustrated Part P.A.R. = Paint as Required

« RETURN TO GROUP INDEX

CYLINDER BLOCK 2.5L ENGINE
Figure 9A-310

9A-310A

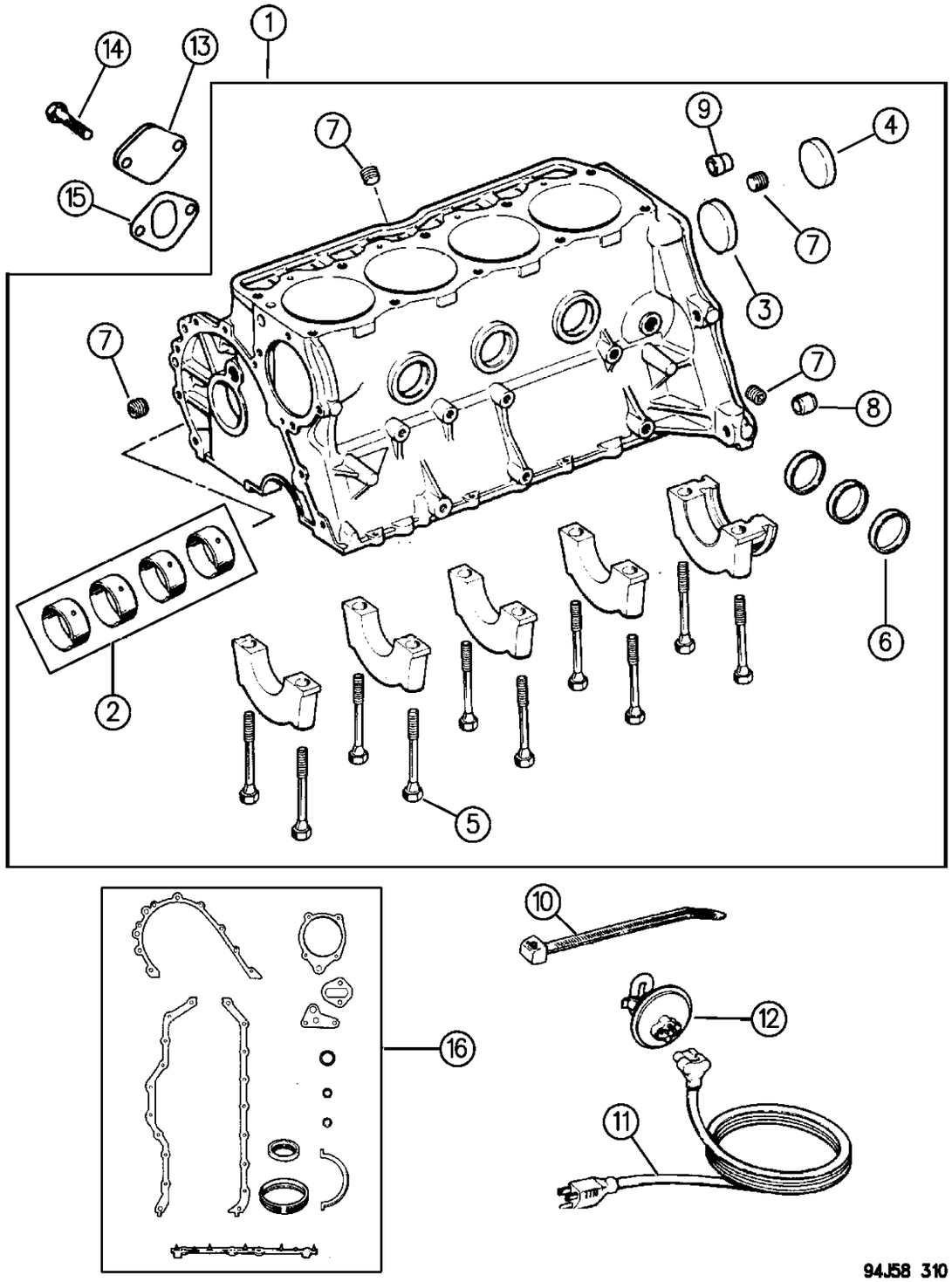

ITEM	PART NUMBER	QTY	BODY	MODEL	DESCRIPTION
1					ENGINE, Short Block, (Contains Crankshaft, Pistons, Rings, Connecting Rods, and Bearings)
	4773 160	1			1994-95
	4856 744	1		XJ	1996
	4856 750	1		X1	
2					BEARING PACKAGE, Camshaft
	J320 5711	1			Standard
	J320 8985	1			.010 O/S
3	J317 2313	1			PLUG
4	5302 0465	1			PLUG, Hole
5	J400 6948	10			BOLT
6	J400 6580	3			PLUG
7	6034 166	4			PLUG
8	J400 6953	1			PIN
9	J324 1332	1			PIN
10	J369 3058	AR			STRAP, (300mm)
11	5601 6834	1			CORD, Power Supply
12	5602 6888	1			HEATER, Engine Block
13	3300 4223	1			PLATE, Cover, Fuel Pump
14	J018 0077	2			BOLT
15	J317 4685	1			GASKET
16	4713 023	1			GASKET PACKAGE, Engine Lower

MODEL CODES:

72=2 DR Wagon
74=4 DR Wagon
77=Open Body 93" Whlbase
78=Open Body 103" Whlbase - Export
T=2WD
J,N=4WD
U=4WD (RHD)

BODY STYLES:

YJ=Wrangler (4X4) "S"
Weangler (4X4) SE
Wrangler (4X4) Sahara
Wrangler (4X4) Renegade
XJ=Cherokee SE
Cherokee Sport
Cherokee Country
ZJ=Grand Cherokee SE
Grand Cherokee Laredo
Grand Cherolee Limited
ZG=Grand Cherokee European
Y1=Wrangler
X1=Cherokee
Z1=Grand Cherokee
KDX=Vehicles

AR = Use as Required - = Non Illustrated Part P.A.R. = Paint as Required

« RETURN TO GROUP INDEX

CRANKSHAFT, PISTON, AND TORQUE CONVERTER 2.5L ENGINE
Figure 9A-410

9A-410A

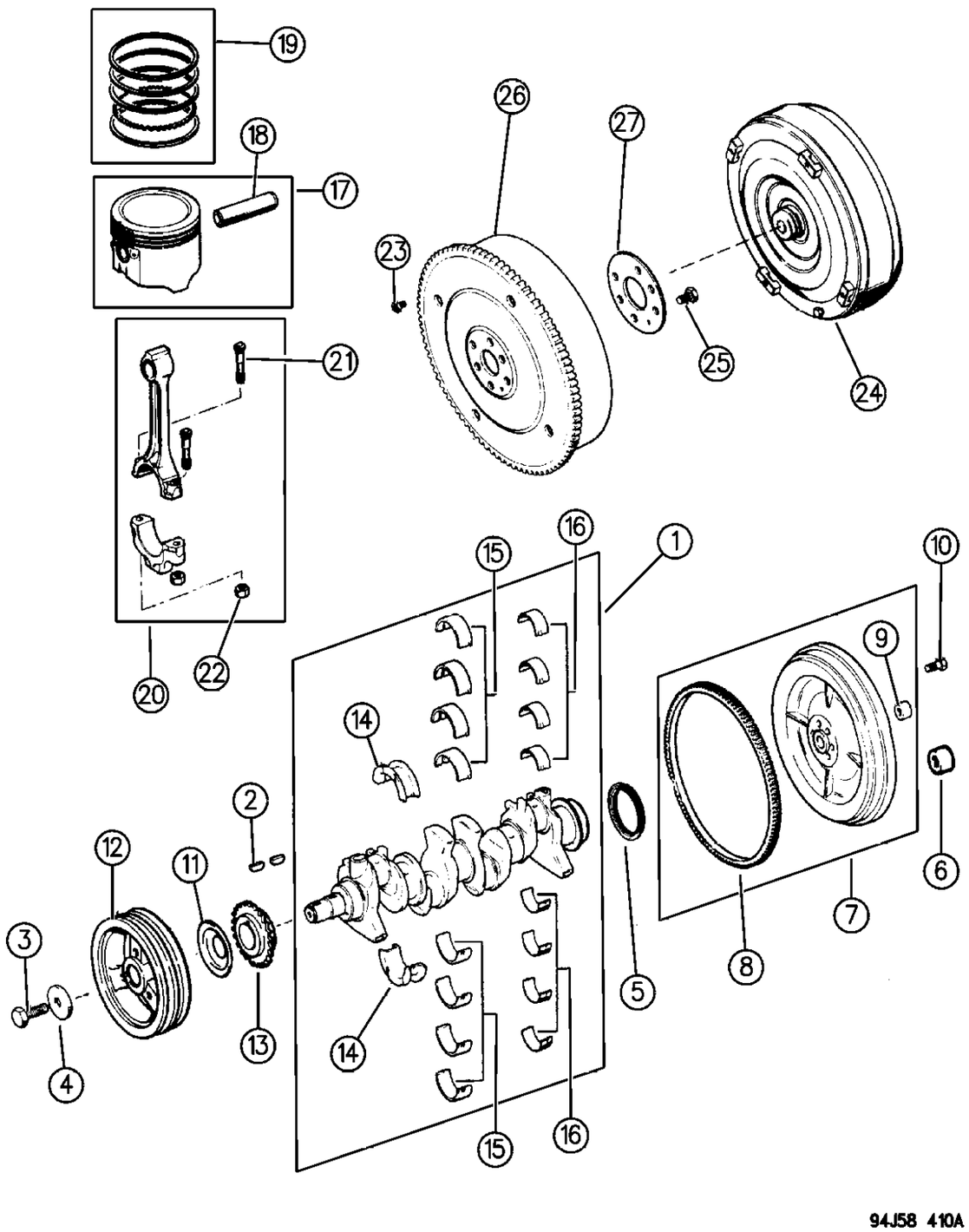

ITEM	PART NUMBER	QTY	BODY	MODEL	DESCRIPTION
1					CRANKSHAFT PACKAGE ***
	4713 051	1			
	5302 0329	1			KDX China, (Casting)
2	6034 749	2			KEY
3	S018 1698				BOLT, (1.25)
4	J323 0155	1			WASHER, Vibration Dampener
5	3300 4143	1			SEAL, Crankshaft Rear
6	5211 7830	1			BUSHING, Auto Trans.
7					FLYWHEEL
	5300 5526	1			1994-95
	5302 0578	1			1996
8	J324 1718	1			GEAR, Ring
9	J325 0005	1			BEARING, Pilot, Man. Trans.
10	J400 7123	6			BOLT, Flywheel to Crankshaft
11	J317 3076	1			SLINGER, Oil ***
12	3300 2879	1			DAMPER, Vibration
13	3300 4020	1			SPROCKET, Crankshaft
14					BEARING PACKAGE, Main Thrust
	8350 7084	1			Standard
	8350 7086	1			.001 U/S
	8350 7090	1			.010 U/S
15					BEARING PACKAGE, Main
	8350 7079	4			Standard
	8350 7080	4			.001 U/S
	8350 7083	4			.010 U/S
16					BEARING PACKAGE, Rod
	8350 0300	4			Standard
	8350 1397	4			.001 U/S
	8350 0301	4			.010 U/S
17					PISTON ASSEMBLY, Standard ***
					1994-95
	4773 157	4			"B" Size, 3.8746
	4773 158	4			"C" Size, 3.8750
	4773 159	4			"D" Size, 3.8754
	4773 456	4			"E" Size, 3.8758
	4773 568	4			"F" Size, 3.8762
					1996
	4798 329	4			"B" Size, 3.8742
	4798 330	4			"C" Size, 3.8746
	4798 331	4			"D" Size, 3.8750
	4798 332	4			"E" Size, 3.8754
	4798 333	4			"F" Size, 3.8758

MODEL CODES:

72=2 DR Wagon
74=4 DR Wagon
77=Open Body 93" Whlbase
78=Open Body 103" Whlbase - Export
T=2WD
J,N=4WD
U=4WD (RHD)

BODY STYLES:

YJ=Wrangler (4X4) "S"
Weangler (4X4) SE
Wrangler (4X4) Sahara
Wrangler (4X4) Renegade
XJ=Cherokee SE
Cherokee Sport
Cherokee Country
ZJ=Grand Cherokee SE
Grand Cherokee Laredo
Grand Cherolee Limited
ZG=Grand Cherokee European
Y1=Wrangler
X1=Cherokee
Z1=Grand Cherokee
KDX=Vehicles

AR = Use as Required - = Non Illustrated Part P.A.R. = Paint as Required

CRANKSHAFT, PISTON, AND TORQUE CONVERTER 2.5L ENGINE
Figure 9A-410

9A-410A

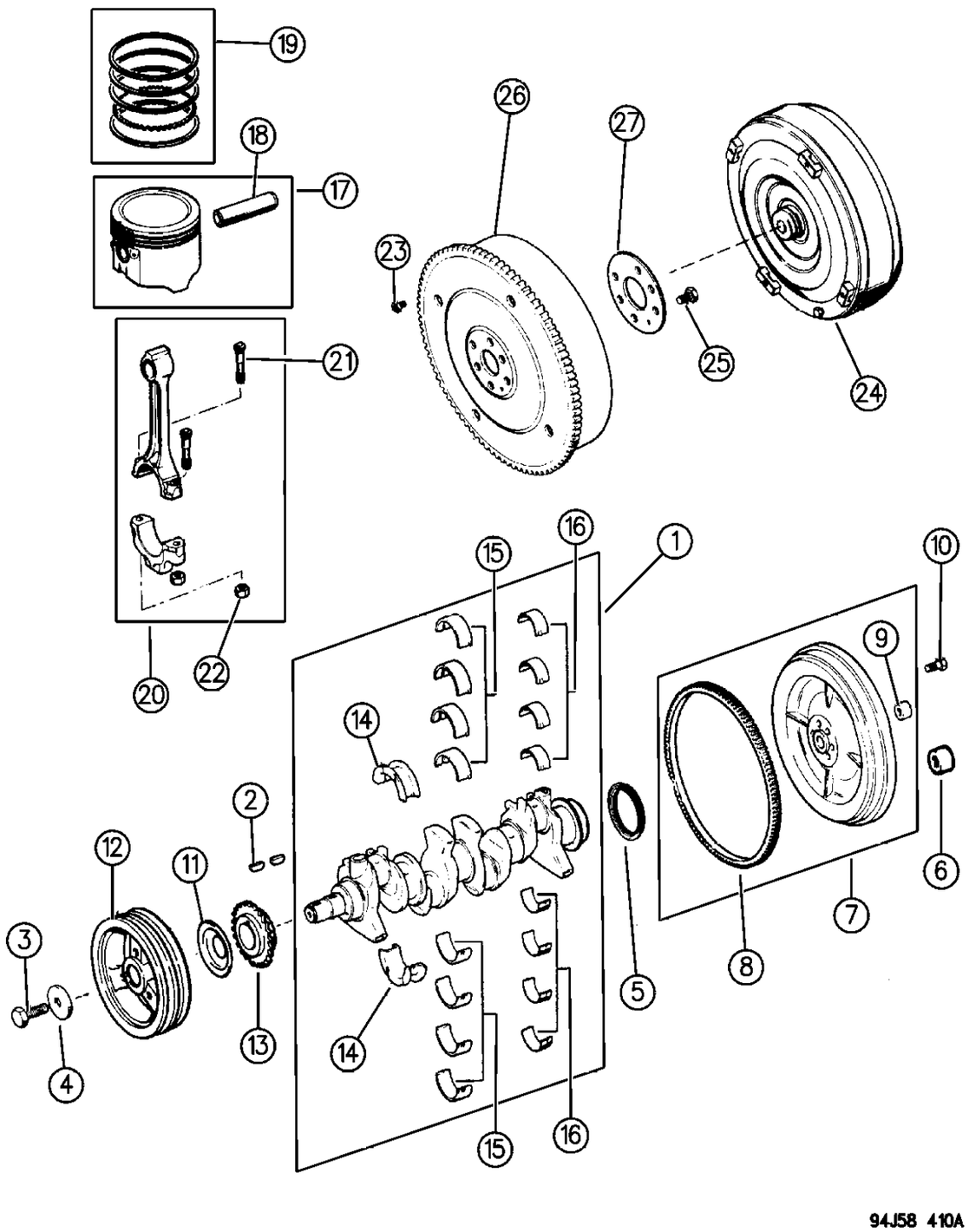

ITEM	PART NUMBER	QTY	BODY	MODEL	DESCRIPTION
18		4			PIN, Piston, Standard, (Serviced in Piston Assy.)
19					RING PACKAGE, Engine
	4762 461	1			1994-95
	4798 324	1			1996
20		4			ROD, Connecting, (Serviced in Piston Assy.)
21	5302 0123	8			BOLT, Connecting Rod
22	J400 6385	8			NUT, Connecting Rod Cap
23	J420 0302	4			BOLT
24	4736 311	1			CONVERTER, Torque, (30RH)
25	6034 780	6			BOLT, Driveplate to Crankshaft
26	5211 7827	1			PLATE, Torque Converter Drive
27	5300 2234	1			REINFORCEMENT

MODEL CODES:

72=2 DR Wagon
74=4 DR Wagon
77=Open Body 93" Whlbase
78=Open Body 103" Whlbase - Export
T=2WD
J,N=4WD
U=4WD (RHD)

BODY STYLES:

YJ=Wrangler (4X4) "S"
Weangler (4X4) SE
Wrangler (4X4) Sahara
Wrangler (4X4) Renegade
XJ=Cherokee SE
Cherokee Sport
Cherokee Country
ZJ=Grand Cherokee SE
Grand Cherokee Laredo
Grand Cherolee Limited
ZG=Grand Cherokee European
Y1=Wrangler
X1=Cherokee
Z1=Grand Cherokee
KDX=Vehicles

AR = Use as Required - = Non Illustrated Part P.A.R. = Paint as Required

CAMSHAFT AND VALVE 2.5L ENGINE
Figure 9A-510

9A-510

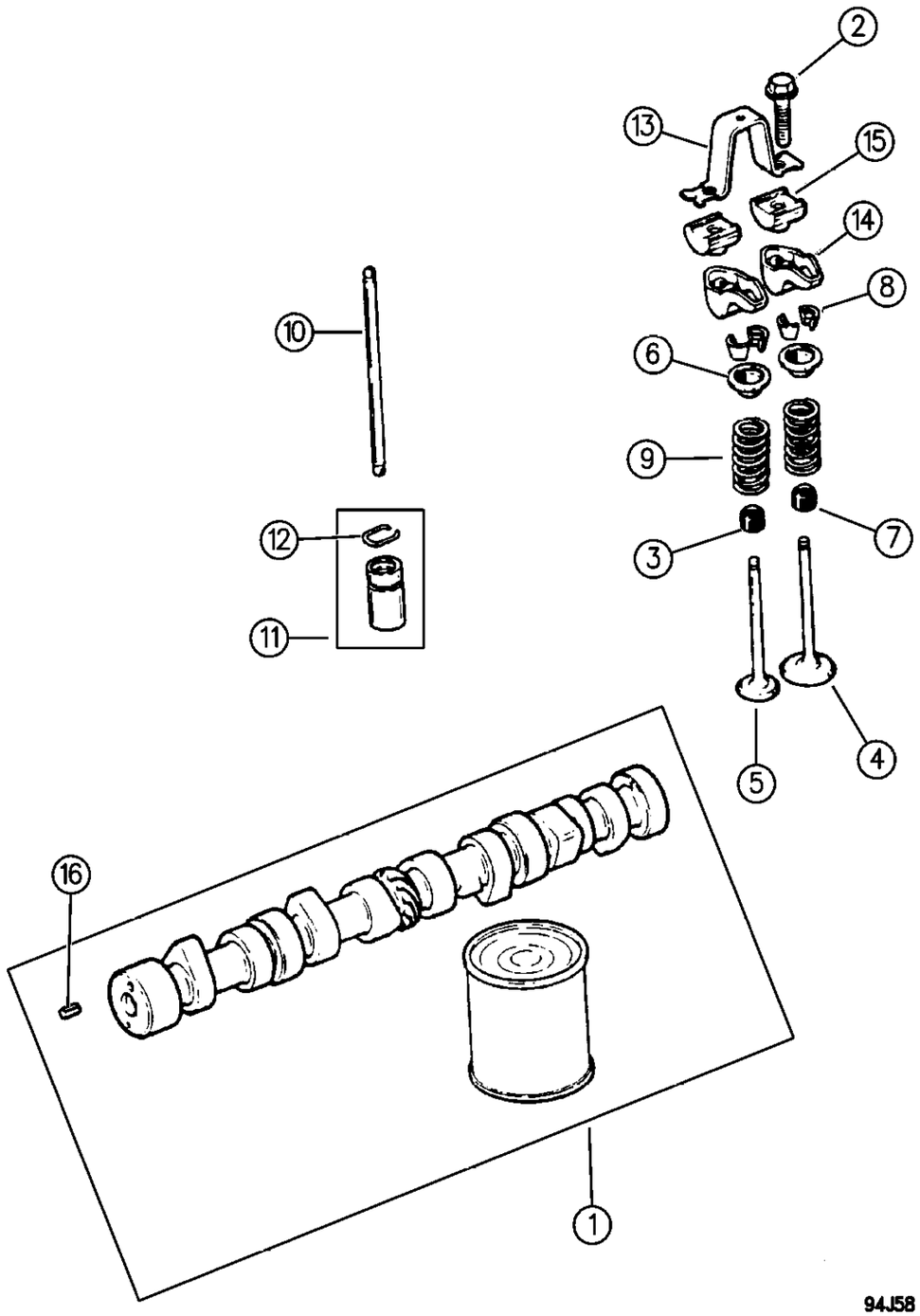

ITEM	PART NUMBER	QTY	BODY	MODEL	DESCRIPTION
1					CAMSHAFT
					1994-95
	4883 910AA	1			Fuel Injected
	5300 6646	1			Carbureted
	5302 0497	1			1996
2	J942 5708	8			BOLT
3					SEAL, Exhaust Valve
	5300 9887	4			Standard
	3300 2733	4			.015 O/S
4					VALVE, Intake
	3300 3515	4			Standard
	3300 3519	4			.003 O/S
	3300 3575	4			.015 O/S
5					VALVE, Exhaust
	4637 537	4			Standard
	4637 538	4			.003 O/S
	4637 539	4			.015 O/S
6	3300 4626	8			RETAINER
7					SEAL, Intake Valve
	5300 9886	4			Standard
	3300 3016	4			.015 O/S
8	3300 3521	16			LOCK, Valve Spring Retainer
9					SPRING, 2" Conicle Shape
	5302 1056	8			1994-95
	5302 0556	8			1996
10	J324 1709	8			PUSHROD
11	J318 9883	8			TAPPET, Valve Hydraulic
12	J644 0614	8			RING
13	J323 6513	4			BRIDGE, Rocker Arm ***
14	4778 743	8			ARM, Valve Rocker
15	J323 5090	8			PIVOT, Rocker Arm
16	J045 6384	1			PIN

MODEL CODES:

72=2 DR Wagon
74=4 DR Wagon
77=Open Body 93" Whlbase
78=Open Body 103" Whlbase - Export
T=2WD
J,N=4WD
U=4WD (RHD)

BODY STYLES:

YJ=Wrangler (4X4) "S"
Weangler (4X4) SE
Wrangler (4X4) Sahara
Wrangler (4X4) Renegade

XJ=Cherokee SE
Cherokee Sport
Cherokee Country

ZJ=Grand Cherokee SE
Grand Cherokee Laredo
Grand Cherolee Limited
ZG=Grand Cherokee European

Y1=Wrangler
X1=Cherokee
Z1=Grand Cherokee
KDX=Vehicles

AR = Use as Required - = Non Illustrated Part P.A.R. = Paint as Required

« RETURN TO GROUP INDEX

TIMING COVER 2.5L ENGINE
Figure 9A-610

9A-610B

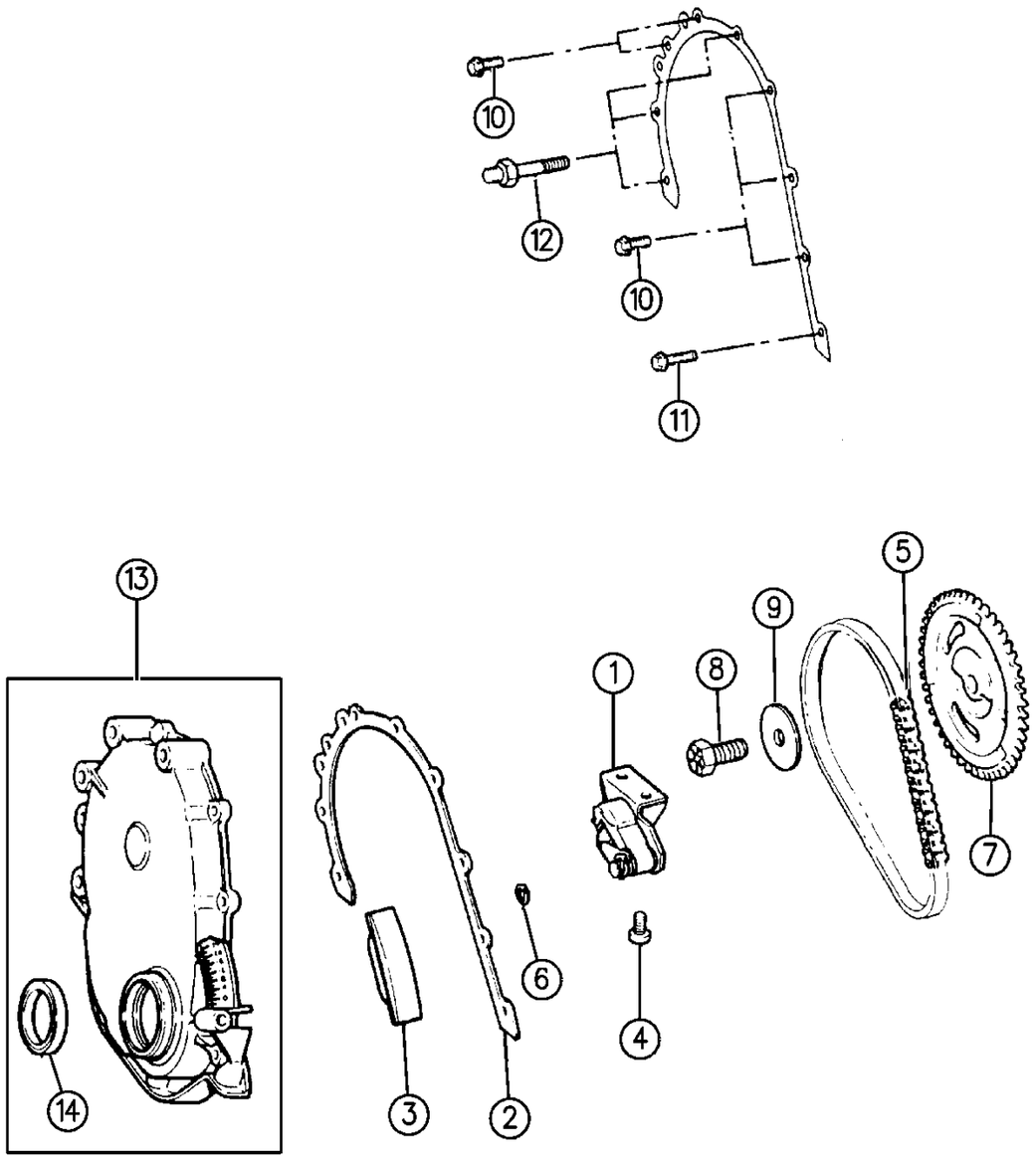

94J58 610A

ITEM	PART NUMBER	QTY	BODY	MODEL	DESCRIPTION
1	3300 3421	1			TENSIONER ASSEMBLY ***
2	5302 0487	1			GASKET, Engine Front Cover
3	3300 3446	1			BUMPER, Timing Chain
4	J400 6708	2			SCREW
5	J324 2300	1			CHAIN, Timing
6		1			CLIP, (Serviced in Tensioner Assembly)
7	J324 2280	1			SPROCKET, Camshaft
8	J324 3156	1			BOLT, Camshaft Sprocket
9	J317 3284	1			WASHER, Camshaft Sprocket
10	J400 6906	5			BOLT, (.75)
	6034 604	2			BOLT, Shoulder
11	6034 914	1			BOLT, (1.12)
12	6033 909	3			BOLT, Stud
13	5302 0222	1			COVER, w/Seal, Timing Case
14	3300 4681	1			SEAL, Oil Crankshaft Front

MODEL CODES:

72=2 DR Wagon
74=4 DR Wagon
77=Open Body 93" Whlbase
78=Open Body 103" Whlbase - Export
T=2WD
J,N=4WD
U=4WD (RHD)

BODY STYLES:

YJ=Wrangler (4X4) "S"
Weangler (4X4) SE
Wrangler (4X4) Sahara
Wrangler (4X4) Renegade
XJ=Cherokee SE
Cherokee Sport
Cherokee Country
ZJ=Grand Cherokee SE
Grand Cherokee Laredo
Grand Cherolee Limited
ZG=Grand Cherokee European
Y1=Wrangler
X1=Cherokee
Z1=Grand Cherokee
KDX=Vehicles

AR = Use as Required - = Non Illustrated Part P.A.R. = Paint as Required

« RETURN TO GROUP INDEX

ENGINE OILING 2.5L ENGINE
Figure 9A-710

9A-710A

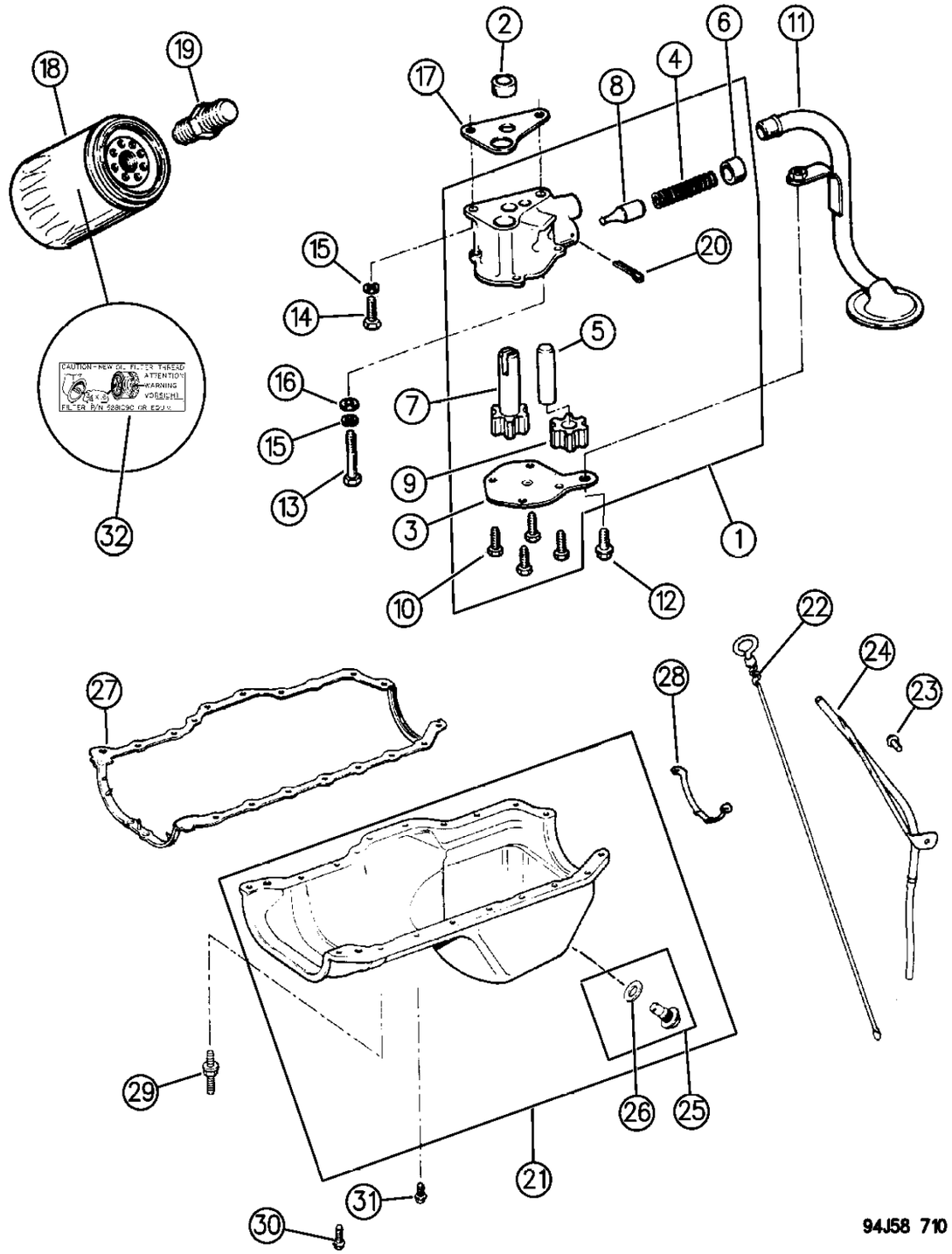

ITEM	PART NUMBER	QTY	BODY	MODEL	DESCRIPTION
1	J324 1399	1			PUMP ASSEMBLY, Oil
2	J400 5149	1			PIN
3	J324 1733	1			COVER, Oil Pump
4	J323 9668	1			SPRING, Oil Release Valve
5	J317 1956	1			SHAFT, Oil Pump Gear
6	J317 1958	1			RETAINER
7	J317 2334	1			GEAR, Oil Pump Drive
8					PLUNGER
	J318 8661	1			Standard
	J324 1676	1			.010 O/S
9	J319 6843	1			GEAR, Oil Pump Driven
10	J941 6852	4			BOLT
11					TUBE, Oil Pump Inlet
	J324 3111	1			1994-95
	5302 0564	1			1996
12	J400 6909	1			BOLT
13					BOLT, Oil Pump
	J943 7670	1			1994, (2.62)
	0154 593	1			1995-96, (.312-18x2.625)
14	6022 235	1			BOLT, (.88)
15	J012 0214	2			WASHER, Lock
16	J012 0393	1			WASHER
17	J317 2332	1			GASKET, Oil Pump
18		1			FILTER, Engine Oil
	5281 090	1			
	3300 4195	1		X1	
19					CONNECTOR, Oil Filter
	5300 7563	1			
	3300 3538	1		X1	
20	J027 1448	1			PIN, Roll, (5/32x1.0)
21					PAN, Engine Oil
	5302 0831	1			1994-95
	5302 0560	1			1996
22					INDICATOR, Engine Oil Level
	3300 7108	1			1994-95
	5302 0557	1			1996
23	J400 7448	1			STUD, Bolt, (.312-18x1.56)
24	J324 1748	1			TUBE, Engine Oil Indicator
25	6035 417	1			PLUG, w/Gasket, Oil Pan Drain
26		1			GASKET, (Serviced in Plug)
27	4713 021	1			GASKET, Oil Pan
28	J324 3116	1			SUPPORT, Oil Pan

MODEL CODES:

72=2 DR Wagon
74=4 DR Wagon
77=Open Body 93" Whlbase
78=Open Body 103" Whlbase - Export
T=2WD
J,N=4WD
U=4WD (RHD)

BODY STYLES:

YJ=Wrangler (4X4) "S"
Weangler (4X4) SE
Wrangler (4X4) Sahara
Wrangler (4X4) Renegade
XJ=Cherokee SE
Cherokee Sport
Cherokee Country
ZJ=Grand Cherokee SE
Grand Cherokee Laredo
Grand Cherolee Limited
ZG=Grand Cherokee European
Y1=Wrangler
X1=Cherokee
Z1=Grand Cherokee
KDX=Vehicles

AR = Use as Required - = Non Illustrated Part P.A.R. = Paint as Required

ENGINE OILING 2.5L ENGINE
Figure 9A-710

9A-710A

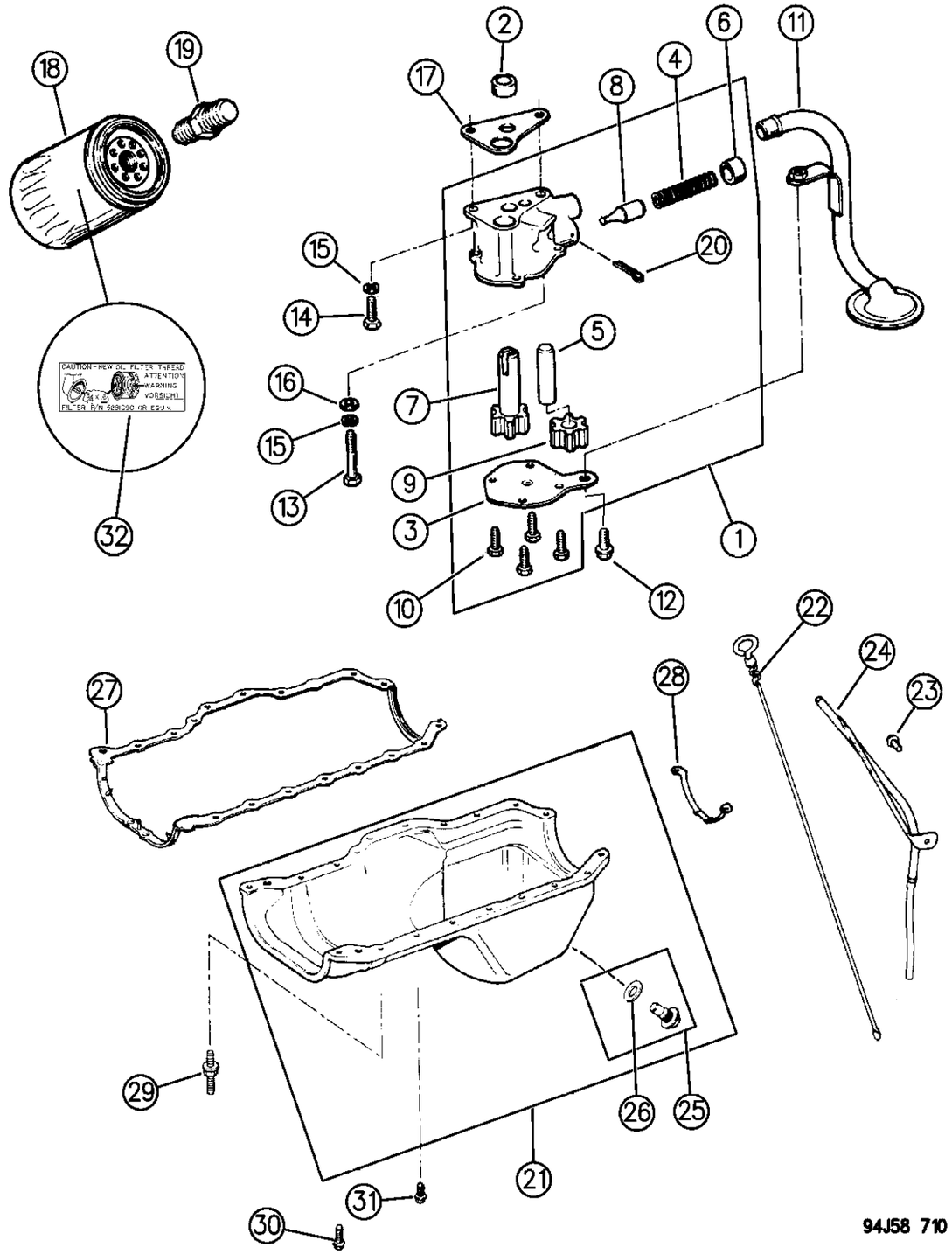

ITEM	PART NUMBER	QTY	BODY	MODEL	DESCRIPTION
29	6034 734	AR			BOLT, Stud
30					SCREW/STUD, Oil Pan ***
	6034 483	AR			Screw, (.75)
	6034 733	AR			Stud, (5/16-18x1/4-20)
31	6034 732	17			SCREW, (.56)
32	5300 8907	1			DECAL, Oil Filter Thread I.D. ***

MODEL CODES:

72=2 DR Wagon
74=4 DR Wagon
77=Open Body 93" Whlbase
78=Open Body 103" Whlbase - Export
T=2WD
J,N=4WD
U=4WD (RHD)

BODY STYLES:

YJ=Wrangler (4X4) "S"
Weangler (4X4) SE
Wrangler (4X4) Sahara
Wrangler (4X4) Renegade
XJ=Cherokee SE
Cherokee Sport
Cherokee Country
ZJ=Grand Cherokee SE
Grand Cherokee Laredo
Grand Cherolee Limited
ZG=Grand Cherokee European
Y1=Wrangler
X1=Cherokee
Z1=Grand Cherokee
KDX=Vehicles

AR = Use as Required - = Non Illustrated Part P.A.R. = Paint as Required

MANIFOLD, INTAKE AND EXHAUST 2.5L EFI ENGINE
Figure 9A-810

9A-810A

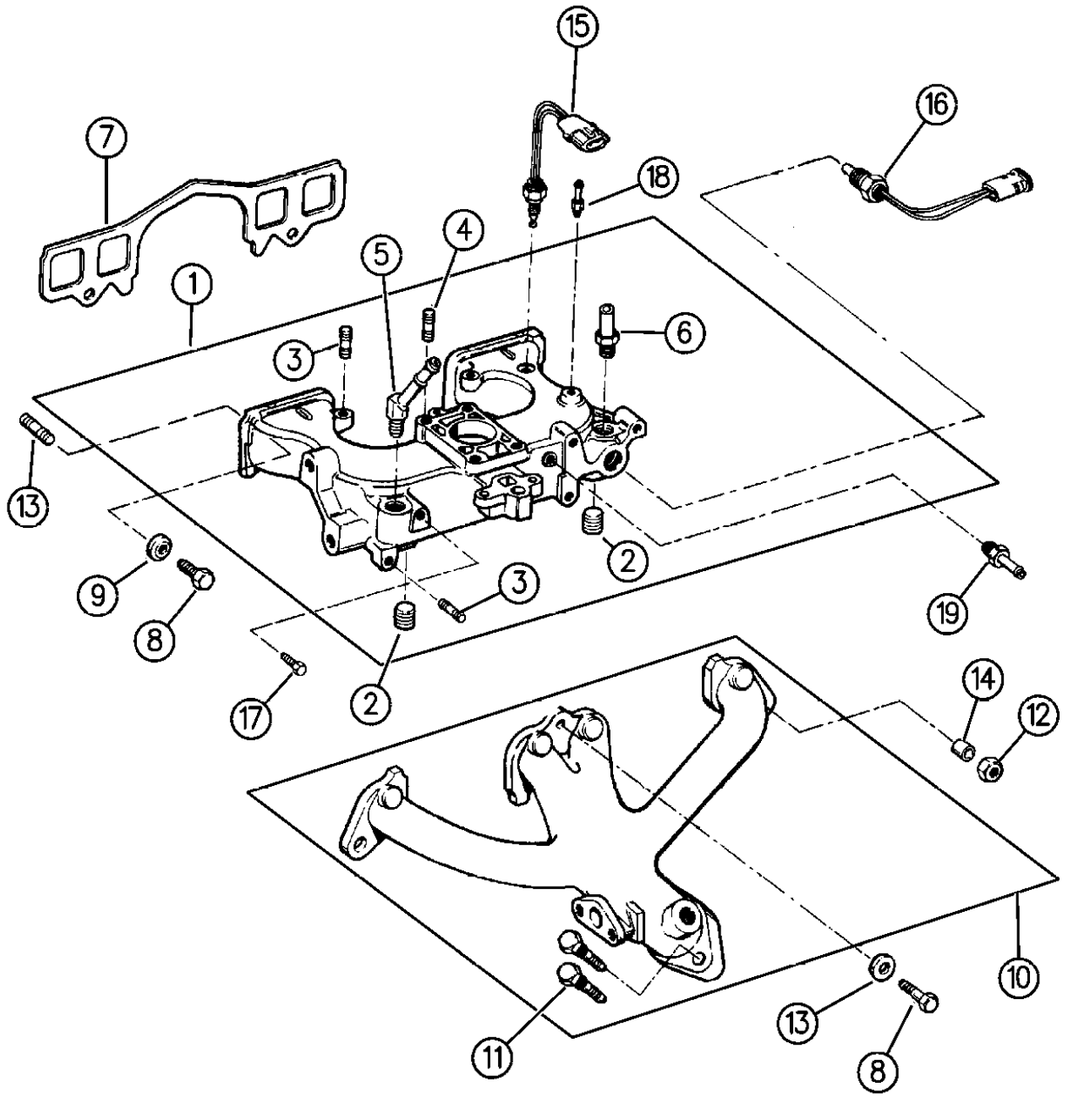

94J58 810A

ITEM	PART NUMBER	QTY	BODY	MODEL	DESCRIPTION
1	3300 7050	1			MANIFOLD, Intake
2	J400 7434	1			PLUG, Drain Square Socket
3	J400 1617	2			STUD
4	J400 7314	4			STUD
5	3300 3580	1			NIPPLE, Straight
6					NIPPLE
	3300 2501				Elbow
	3200 2709	1			Straight
7	5302 0112	1			GASKET
8	J018 6622	AR			BOLT
9	3300 4255	7			WASHER, Manifold to Head
10	5300 8860	1			MANIFOLD, Exhaust
11	J400 7109	2			STUD
12	6034 984	2			NUT
13	5301 0165	2			STUD, Exhaust Manifold
14	3300 3332	2			SPACER
15	3300 4280	1			SENSOR, Air Intake Temperature
16	3300 4281	1			SENSOR, Coolant Temperature
17	J027 3573	1			BOLT
18	5300 4523	1			FITTING, Vacuum, 2-Port
19	3300 2327	1			FITTING,Vacuum

MODEL CODES:

72=2 DR Wagon
74=4 DR Wagon
77=Open Body 93" Whlbase
78=Open Body 103" Whlbase - Export
T=2WD
J,N=4WD
U=4WD (RHD)

BODY STYLES:

YJ=Wrangler (4X4) "S"
Weangler (4X4) SE
Wrangler (4X4) Sahara
Wrangler (4X4) Renegade
XJ=Cherokee SE
Cherokee Sport
Cherokee Country
ZJ=Grand Cherokee SE
Grand Cherokee Laredo
Grand Cherolee Limited
ZG=Grand Cherokee European
Y1=Wrangler
X1=Cherokee
Z1=Grand Cherokee
KDX=Vehicles

AR = Use as Required - = Non Illustrated Part P.A.R. = Paint as Required

« RETURN TO GROUP INDEX

MANIFOLD, INTAKE AND EXHAUST 2.5L CARBURETED ENGINE
Figure 9A-820

9A-820

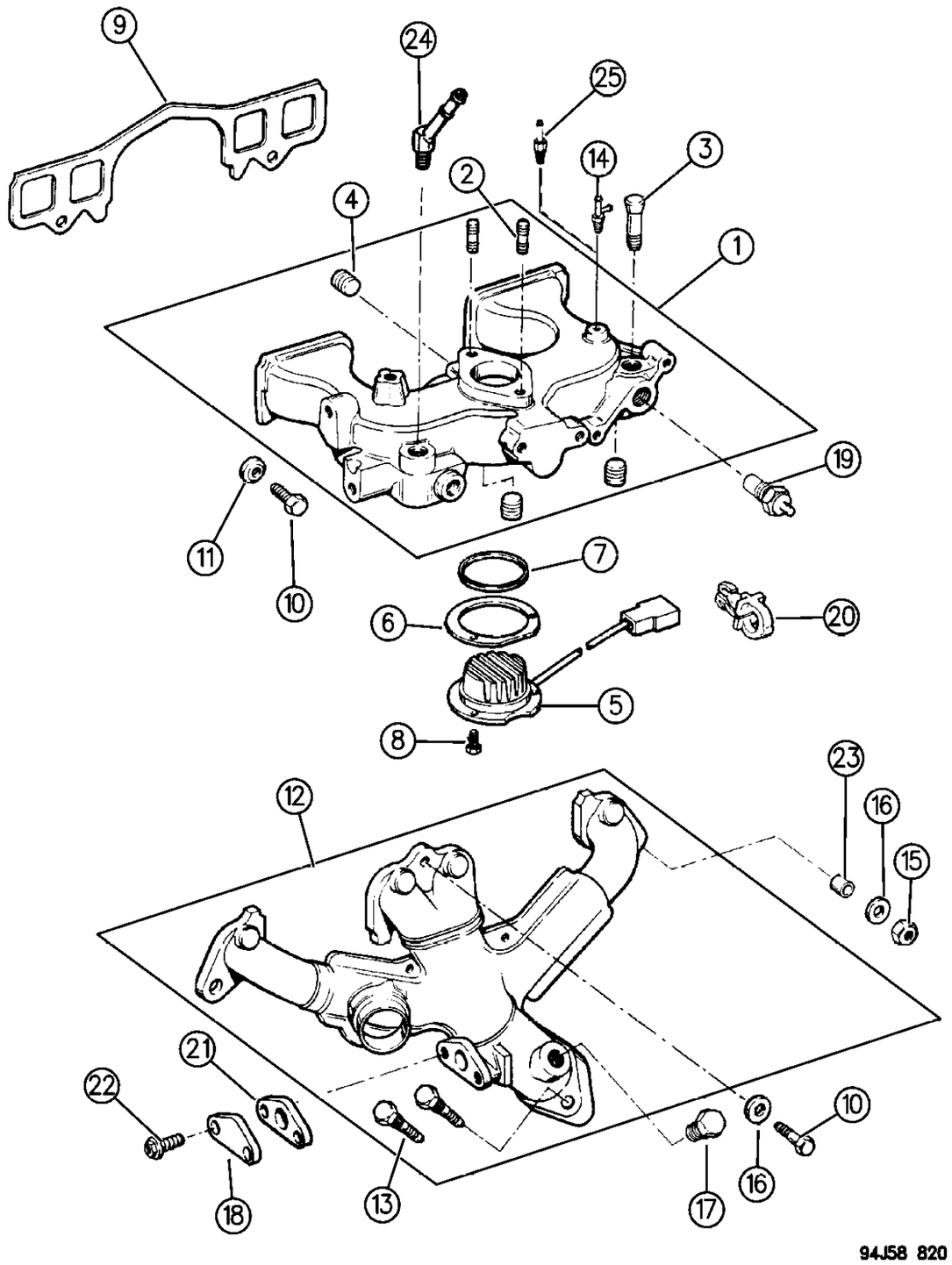

ITEM	PART NUMBER	QTY	BODY	MODEL	DESCRIPTION
1	J324 2582	1			MANIFOLD, Intake
2	J400 6957	2			STUD
3	3200 2709	2			NIPPLE
4	S940 9961	3			PLUG
5	3300 2466	1			HEATER, Early Fuel Evaporation
6	J323 8909	1			GASKET
7	J420 0431	1			O-RING
8	J018 0016	3			BOLT
9	5302 0112	1			GASKET
10	J018 6622	5			BOLT
11	3300 4255	4			WASHER, Manifold to Head
12	5301 0194	1			MANIFOLD PACKAGE, Exhaust ***
13	J400 7109	2			STUD
14	5302 0106	1			FITTING, Vacuum
15	6034 984	2			NUT
16	J317 3077	3			WASHER
17	J420 0413	1			PLUG, Oxygen Sensor
18	J324 2583	1			COVER, EGR Port
19	J324 2321	1			SWITCH, Early Fuel Evaporation
20	3420 1633	1			CLIP
21	3300 3879	1			GASKET
22	J400 6985	2			BOLT
23	3300 3332	2			SPACER
24	3200 2707	1			ELBOW
25	5302 0101	1			FITTING, Vacuum

MODEL CODES:

72=2 DR Wagon
74=4 DR Wagon
77=Open Body 93" Whlbase
78=Open Body 103" Whlbase - Export
T=2WD
J,N=4WD
U=4WD (RHD)

BODY STYLES:

YJ=Wrangler (4X4) "S"
Weangler (4X4) SE
Wrangler (4X4) Sahara
Wrangler (4X4) Renegade
XJ=Cherokee SE
Cherokee Sport
Cherokee Country
ZJ=Grand Cherokee SE
Grand Cherokee Laredo
Grand Cherolee Limited
ZG=Grand Cherokee European
Y1=Wrangler
X1=Cherokee
Z1=Grand Cherokee
KDX=Vehicles

AR = Use as Required - = Non Illustrated Part P.A.R. = Paint as Required

« RETURN TO GROUP INDEX

CRANKCASE VENTILATION 2.5L ENGINE
Figure 9A-910

9A-910A

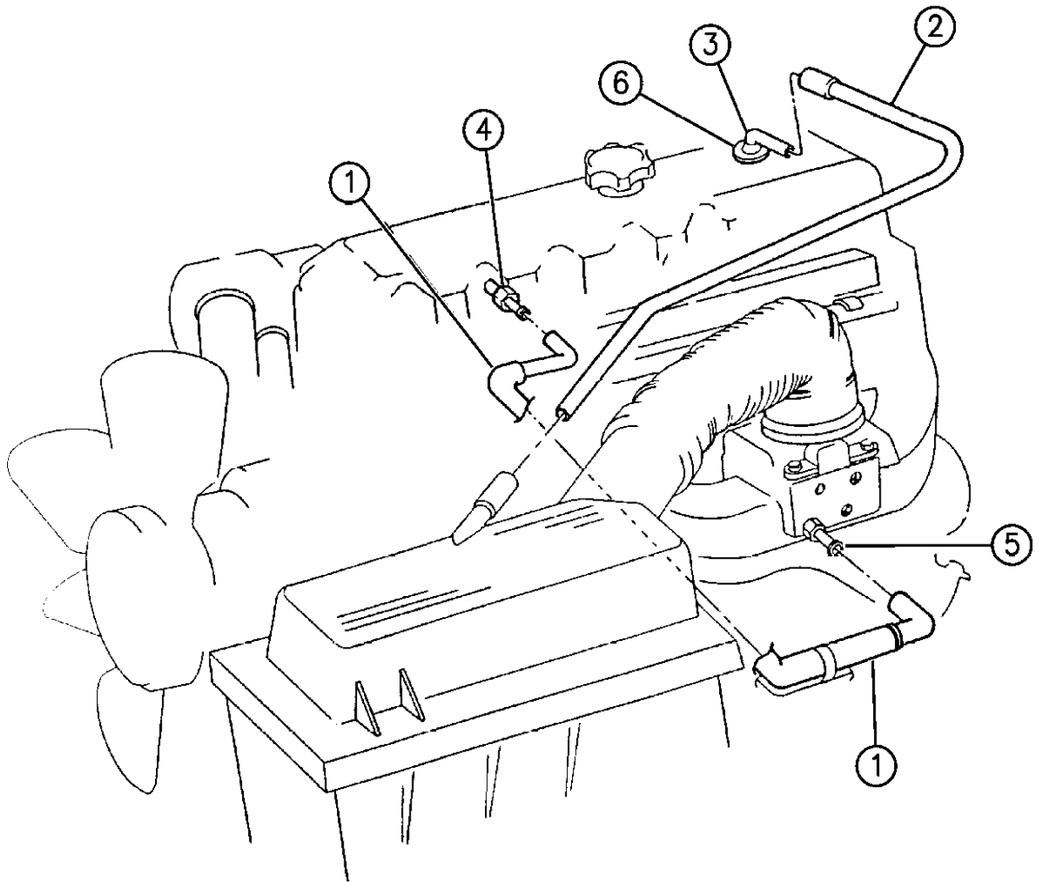

94J58 910

ITEM	PART NUMBER	QTY	BODY	MODEL	DESCRIPTION
1	5303 0189	1			TUBE ASSEMBLY, Crankcase Vent to Manifold ***
2					TUBE ASSEMBLY, Crankcase Vent to Air Cleaner ***
	5300 6236	1			
	5303 0241	1			KDX Egypt, w/Severe Use Air Cleaner
3	5303 0497	1			TUBE FITTING, w/Gasket, Crankcase Vent ***
4	3300 4175	1			FITTING, Vacuum
5	5302 0027	1			CONNECTOR, Manifold Vacuum
6	2946 079	1			GROMMET, Crankcase Vent Valve

MODEL CODES:

72=2 DR Wagon
74=4 DR Wagon
77=Open Body 93" Whlbase
78=Open Body 103" Whlbase - Export
T=2WD
J,N=4WD
U=4WD (RHD)

BODY STYLES:

YJ=Wrangler (4X4) "S"
Weangler (4X4) SE
Wrangler (4X4) Sahara
Wrangler (4X4) Renegade
XJ=Cherokee SE
Cherokee Sport
Cherokee Country
ZJ=Grand Cherokee SE
Grand Cherokee Laredo
Grand Cherolee Limited
ZG=Grand Cherokee European
Y1=Wrangler
X1=Cherokee
Z1=Grand Cherokee
KDX=Vehicles

AR = Use as Required - = Non Illustrated Part P.A.R. = Paint as Required

« RETURN TO GROUP INDEX

ENGINE MOUNTING 2.5L ENGINE YJ BODY
Figure 9A-1010

9A-1010A

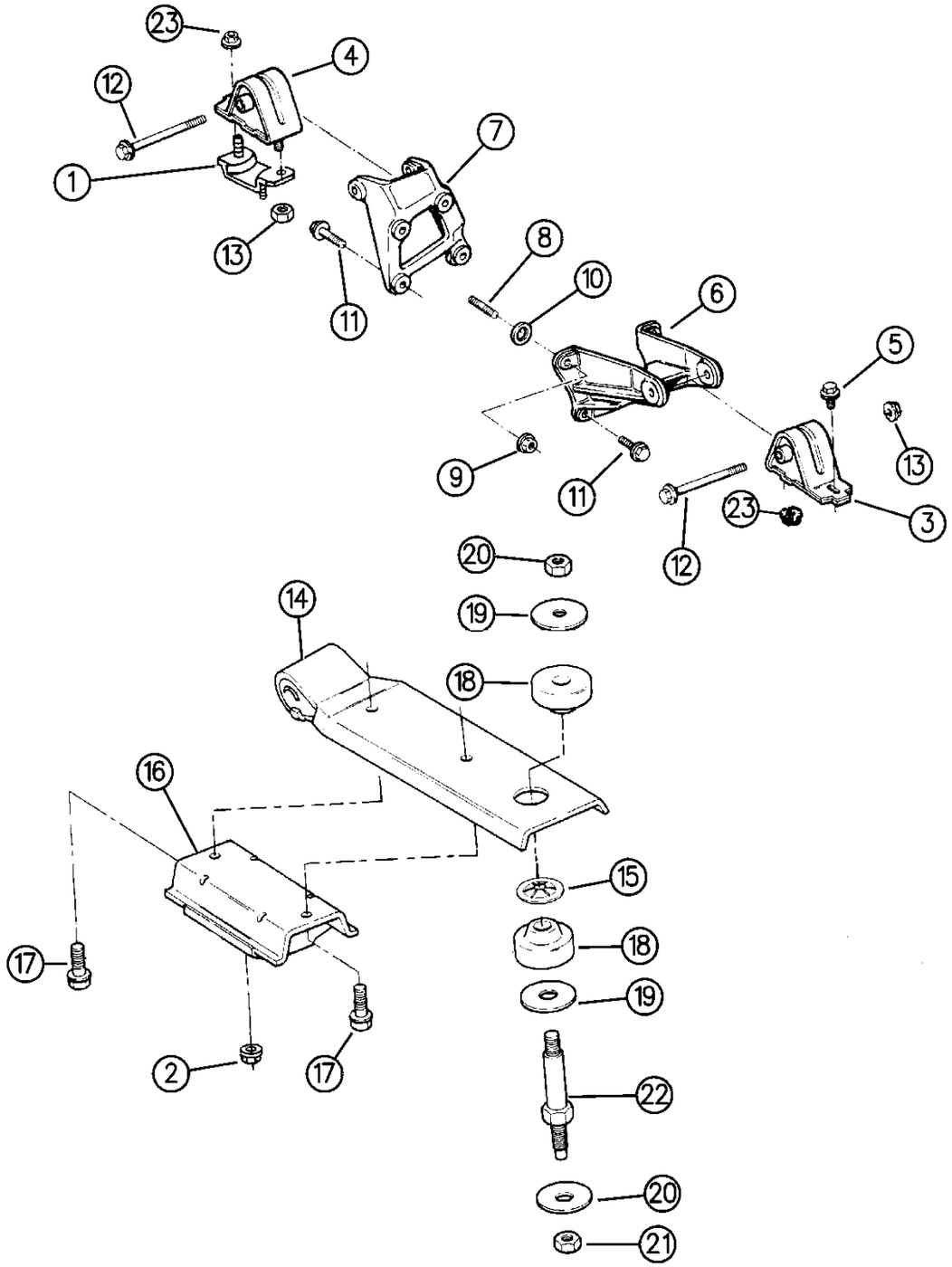

94J58 1010A

ITEM	PART NUMBER	QTY	BODY	MODEL	DESCRIPTION
1	5205 8562	1			BRACKET, Mount to Sill
2	3420 2013	2			NUT, (M10)
3	5200 0074	1			INSULATOR, Lt., Support Front Cushion
4	5201 7534	1			INSULATOR, Rt., Support Front Cushion
5	3420 1559	1			BOLT
6	5200 6093	1			BRACKET, Lt., Support Front Cushion
7	5200 5078	1			BRACKET, Rt., Support Front Cushion
8	6033 883	1			STUD, Double Ended
9	J400 6653	1			NUT
10	J400 1161	1			WASHER, Spacer
11	J400 6995	7			BOLT, (.375-16x1.12)
12	3420 2605	2			BOLT
13	6502 697				NUT, (M12)
		1			Left
		2			Right
14					BRACKET, Torque Arm
	5200 3043	1			Man. Trans.
	5200 3045	1			Auto Trans.
15	J400 0235	1			NUT, Push, (.38 I.D.)
16	5201 9386	1			INSULATOR, Trans. Support Rear
17	J400 7162	2			BOLT, (7/16-14x1-1/8)
18	J094 5266	2			INSULATOR
19	J094 1399	2			WASHER
20	J094 5269	4			WASHER
21	J941 1783	2			NUT
22	J535 8879	1			STUD
23	6502 135	3			NUT, (M10)

MODEL CODES:

72=2 DR Wagon
74=4 DR Wagon
77=Open Body 93" Whlbase
78=Open Body 103" Whlbase - Export
T=2WD
J,N=4WD
U=4WD (RHD)

BODY STYLES:

YJ=Wrangler (4X4) "S"
Weangler (4X4) SE
Wrangler (4X4) Sahara
Wrangler (4X4) Renegade

XJ=Cherokee SE
Cherokee Sport
Cherokee Country

ZJ=Grand Cherokee SE
Grand Cherokee Laredo
Grand Cherolee Limited
ZG=Grand Cherokee European

Y1=Wrangler
X1=Cherokee
Z1=Grand Cherokee
KDX=Vehicles

AR = Use as Required - = Non Illustrated Part P.A.R. = Paint as Required

« RETURN TO GROUP INDEX

ENGINE MOUNTING 2.5L ENGINE XJ BODY
Figure 9A-1020

9A-1020B

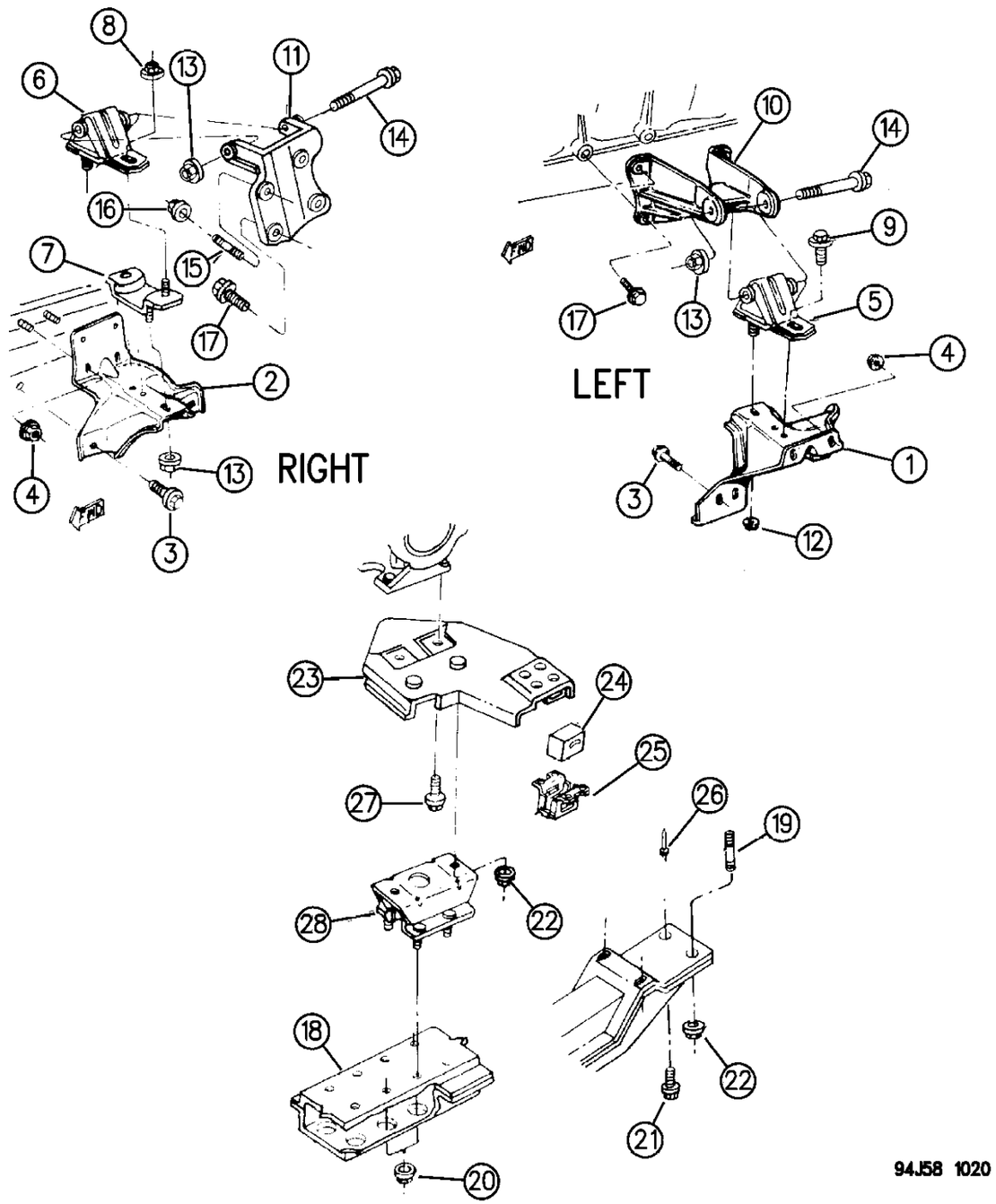

ITEM	PART NUMBER	QTY	BODY	MODEL	DESCRIPTION
1					BRACKET, Lt., Support Front Cushion to Sill
	5200 3005	1			Man. Trans.
	5202 0219	1			Auto Trans.
2					BRACKET, Rt., Support Front Cushion to Sill
					Man. Trans.
	5200 0572	1			1994
	5205 8808	1			1995-96
	5205 9031	1		X1	1996
	5201 8021	1			1994, RHD
	5205 8809	1			1995, RHD
	5205 9030	1			1996, RHD
					Auto Trans.
	5205 9010	1			
3					BOLT
	6502 673	AR			Up To 3-11-96, (M10x1.5x40.00)
	6504 511	AR			After 3-11-96, (M10x1.5x40.00)
4	3420 1416	4			NUT, (M8x1.25)
5	5200 7394	1			INSULATOR, Lt., Support Front Cushion
6					INSULATOR, Rt., Support Front Cushion
	J324 2711	1			
	J324 2728	1			RHD
7	5200 7290	1			BRACKET, Adapter Cushion to Sill
8	6502 135	2			NUT
9	3420 1559	1			BOLT
10					BRACKET, Lt., Support Front Cushion Mounting
					Man. Trans.
	5200 6093	1			1994-95
	5206 0003	1			1996
					Auto Trans.
	5201 8451	1			1994-95
	5205 8877	1			1996
11					BRACKET, Rt., Support Front Cushion Mounting
	5201 7731	1			Man. Trans.
	5201 8450	1			Auto Trans.
12	6502 135	1			NUT
13	6502 697	2			NUT
14					BOLT
	6101 742	1			Right
	3420 1959	1			Left, (M12x1.75x125.0)
15	6033 883	1			STUD, Double Ended
16	0152 344	AR			NUT
17					BOLT/STUD ***

MODEL CODES:

72=2 DR Wagon
74=4 DR Wagon
77=Open Body 93" Whlbase
78=Open Body 103" Whlbase - Export
T=2WD
J,N=4WD
U=4WD (RHD)

BODY STYLES:

YJ=Wrangler (4X4) "S"
Weangler (4X4) SE
Wrangler (4X4) Sahara
Wrangler (4X4) Renegade
XJ=Cherokee SE
Cherokee Sport
Cherokee Country
ZJ=Grand Cherokee SE
Grand Cherokee Laredo
Grand Cherolee Limited
ZG=Grand Cherokee European
Y1=Wrangler
X1=Cherokee
Z1=Grand Cherokee
KDX=Vehicles

AR = Use as Required - = Non Illustrated Part P.A.R. = Paint as Required

ENGINE MOUNTING 2.5L ENGINE XJ BODY
Figure 9A-1020

9A-1020B

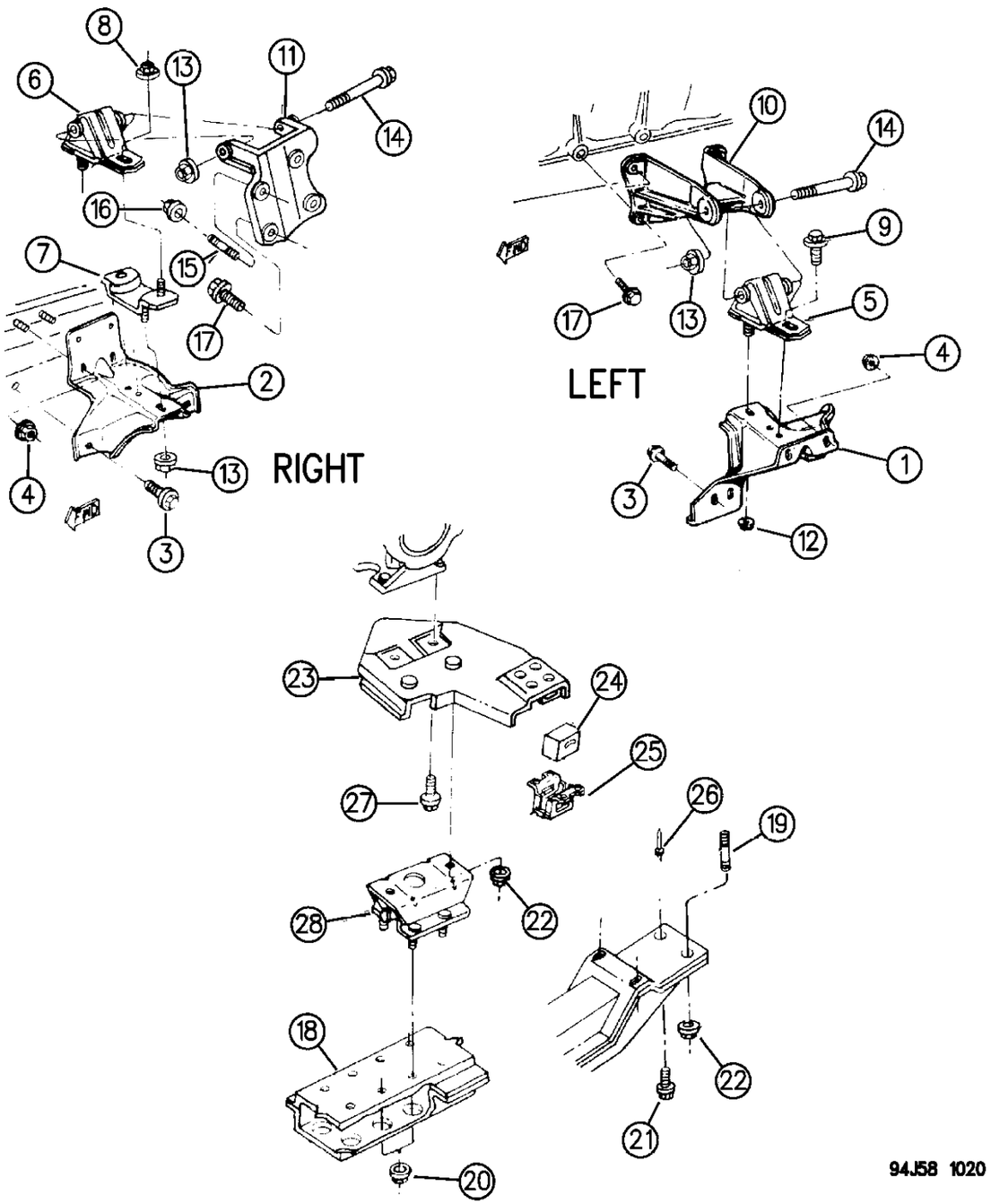

ITEM	PART NUMBER	QTY	BODY	MODEL	DESCRIPTION
	6034 989	6			BOLT, (.375-16x1.125)
	J400 4110	1			STUD, Bracket to Block, KDX-China
18					CROSSMEMBER, Trans. Support
	5200 2328	1			Man. Trans.
	5205 8643	1			Auto Trans.
19	3420 1710	2			STUD
20	3420 1918	4			NUT
21	3420 1540	6			BOLT, (30mm)
22	6502 135	4			NUT
23	5200 3069	1			BRACKET, Rear Support, Man. Trans.
24					INSULATOR
	5300 0101	1			1994-95
	5205 8884	1			1996
25	5300 0104	1			BRACKET
26	3420 1629	4			RIVET
27	J027 4902	3			BOLT
28					INSULATOR, Transmission Support Rear
	5200 7393	1			2WD
	5200 1180	1			4WD

MODEL CODES:

72=2 DR Wagon 77=Open Body 93" Whlbase T=2WD U=4WD (RHD)
74=4 DR Wagon 78=Open Body 103" Whlbase - Export J,N=4WD

BODY STYLES:

YJ=Wrangler (4X4) "S"
Weangler (4X4) SE
Wrangler (4X4) Sahara
Wrangler (4X4) Renegade

XJ=Cherokee SE
Cherokee Sport
Cherokee Country

ZJ=Grand Cherokee SE
Grand Cherokee Laredo
Grand Cherolee Limited
ZG=Grand Cherokee European

Y1=Wrangler
X1=Cherokee
Z1=Grand Cherokee
KDX=Vehicles

AR = Use as Required - = Non Illustrated Part P.A.R. = Paint as Required

SAGIPARTS

GROUP-9B
4.0L ENGINE

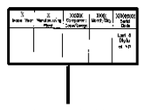

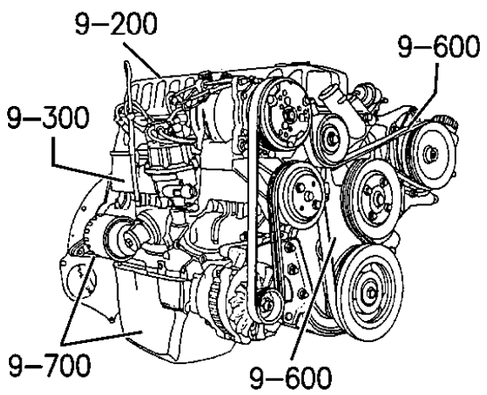

09A	(G) EDA = 2.5L ENGINE 4 CYL. (GAS) TBI
	(H) EPE = 2.5L ENGINE 4 CYL. (GAS) LEADED
	(P) EPE = 2.5L ENGINE 4 CYL. (GAS) UNLEADED
	(F) EPB = 2.5L ENGINE 4 CYL. (GAS) MPI
09B	(S) ERH UNLEADED = 4.0L ENGINE 6 CYL. (GAS) MPI
	(V) ERH LEADED = 4.0L ENGINE 6 CYL. (GAS) MPI
09C	(Y) ELF = 5.2L ENGINE 8 CYL. MPI
09D	(B) ENA = 2.1L ENGINE 4 CYL. DIESEL
09E	(M) ENC = 2.5L ENGINE 4 CYL. DIESEL

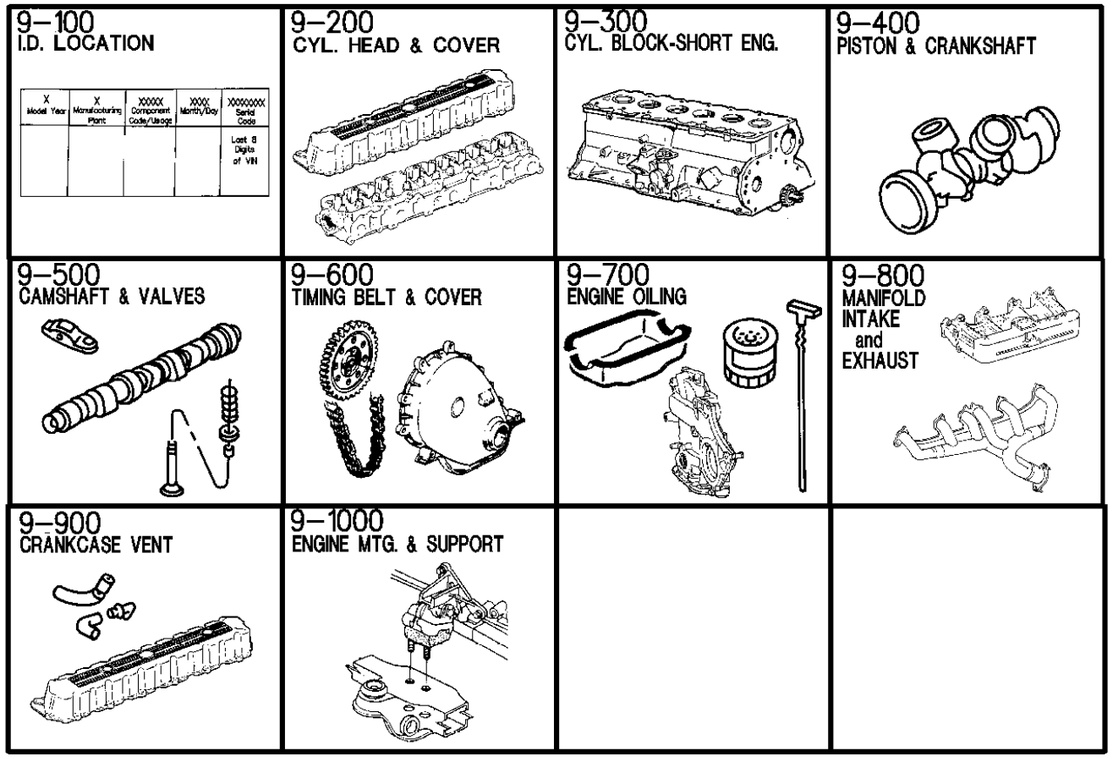

GROUP 9B - ENGINE, 6 CYLINDER

ILLUSTRATION TITLE	GROUP-FIG. NO.
I.D. LOCATION	
I.D. LOCATION 4.0L ENGINE	Fig. 9B-110
CYLINDER HEAD	
CYLINDER HEAD 4.0L ENGINE	Fig. 9B-210
CYLINDER BLOCK	
CYLINDER BLOCK 4.0L ENGINE	Fig. 9B-310
CRANKSHAFT, PISTON, AND TORQUE CONVERTER	
CRANKSHAFT, PISTON, AND TORQUE CONVERTER 4.0L ENGINE	Fig. 9B-410
CAMSHAFT AND VALVES	
CAMSHAFT AND VALVE 4.0L ENGINE	Fig. 9B-510
TIMING COVER	
TIMING COVER 4.0L ENGINE	Fig. 9B-610
ENGINE OILING	
ENGINE OILING 4.0L ENGINE	Fig. 9B-710
MANIFOLDS	
MANIFOLD, INTAKE AND EXHAUST 4.0L ENGINE	Fig. 9B-810
CRANKCASE VENTILATION	
CRANKCASE VENTILATION 4.0L ENGINE	Fig. 9B-910
ENGINE MOUNTS	
ENGINE MOUNTING 4.0L ENGINE YJ BODY	Fig. 9B-1010
ENGINE MOUNTING 4.0L ENGINE XJ BODY	Fig. 9B-1020
ENGINE MOUNTS 4.0L ENGINE ZJ BODY	Fig. 9B-1030

I.D. LOCATION 4.0L ENGINE
Figure 9B-110

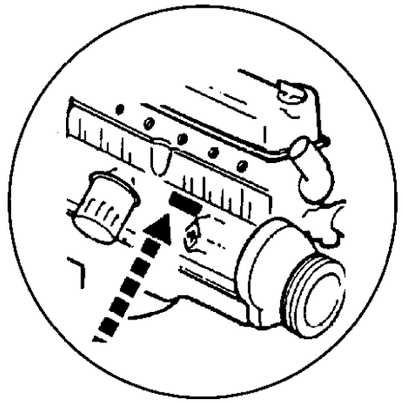

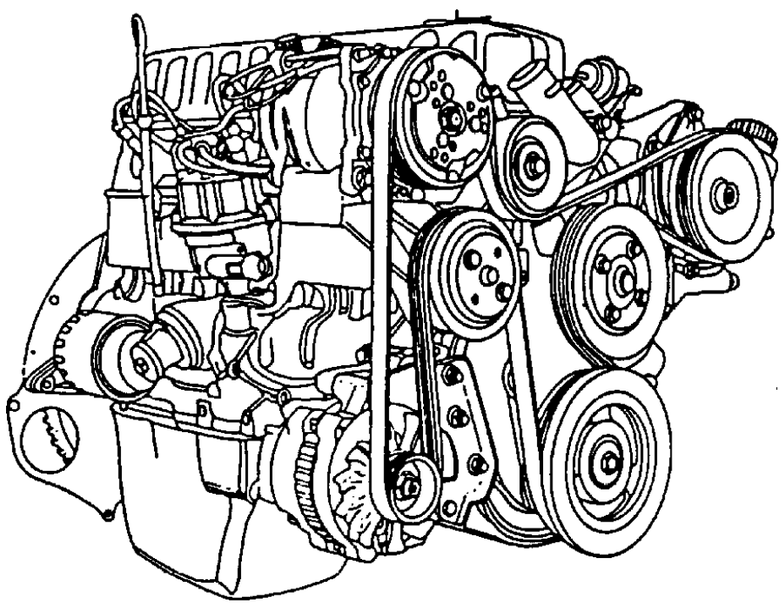

94J56 110

ITEM	PART NUMBER	QTY	BODY	MODEL	DESCRIPTION
1					I.D. LOCATION IS ON RIGHT FRONT SIDE OF ENGINE NEAR OIL FILTER. ***

MODEL CODES:

72=2 DR Wagon
74=4 DR Wagon
77=Open Body 93" Whlbase
78=Open Body 103" Whlbase - Export
T=2WD
J,N=4WD
U=4WD (RHD)

BODY STYLES:

YJ=Wrangler (4X4) "S"
Weangler (4X4) SE
Wrangler (4X4) Sahara
Wrangler (4X4) Renegade

XJ=Cherokee SE
Cherokee Sport
Cherokee Country

ZJ=Grand Cherokee SE
Grand Cherokee Laredo
Grand Cherolee Limited
ZG=Grand Cherokee European

Y1=Wrangler
X1=Cherokee
Z1=Grand Cherokee
KDX=Vehicles

AR = Use as Required - = Non Illustrated Part P.A.R. = Paint as Required

CYLINDER HEAD 4.0L ENGINE
Figure 9B-210

9B-210E

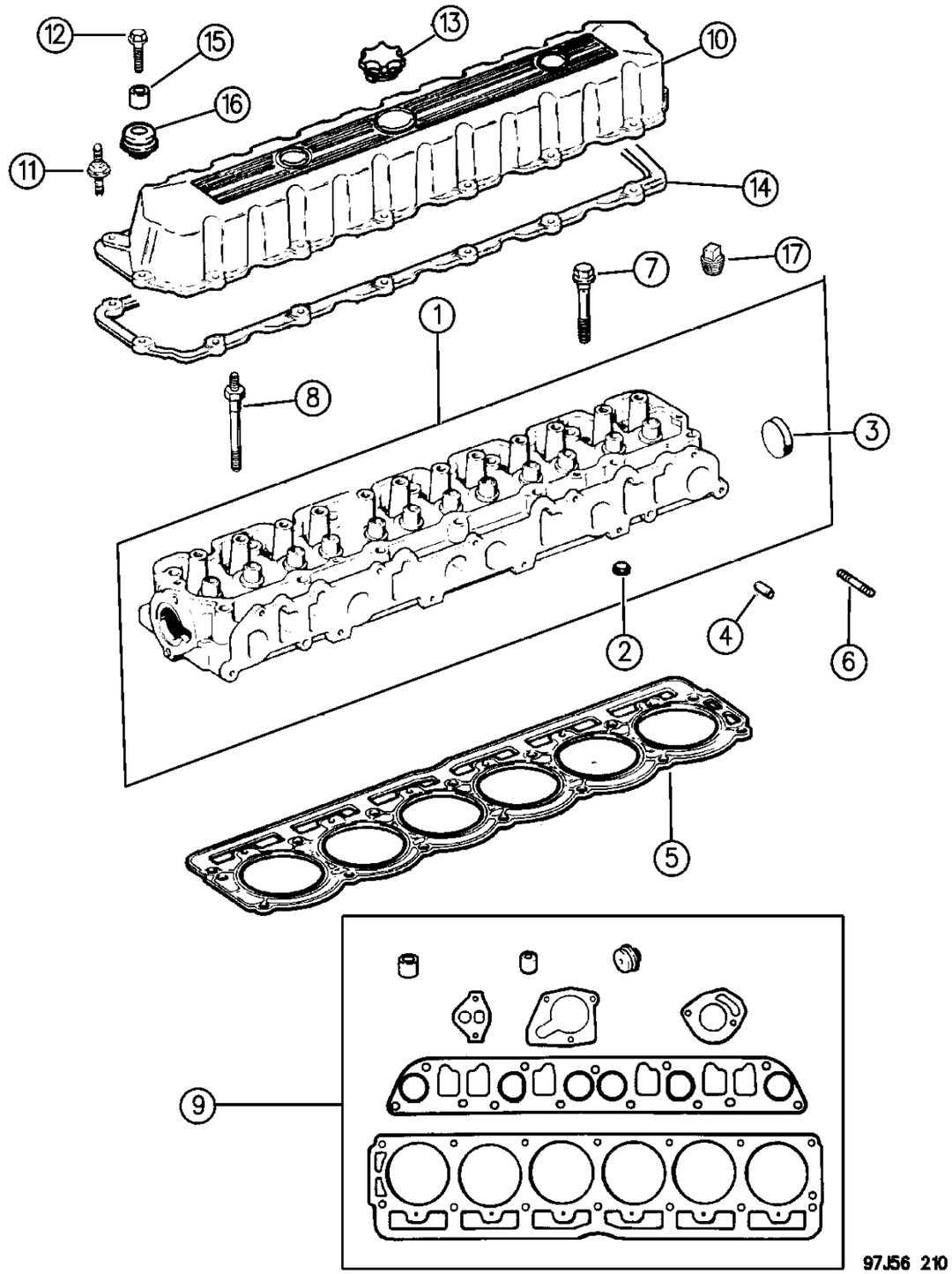

ITEM	PART NUMBER	QTY	BODY	MODEL	DESCRIPTION
1					HEAD, Engine Cylinder
	3300 7118	1			1994-95
	5302 0622	1			1996
2	J400 7434	6			PLUG, Drain, (Square Socket)
3	J310 5394	1			PLUG, (2")
4	J317 2318	2			PIN, Cylinder Head to Manifold Dowel
5					GASKET, Cylinder Head
	5302 0219	1			1994-95
	5302 0754	1			1996
6	5301 0165	2			STUD, Exhaust Manifold
7					BOLT, Cylinder Head
	J400 7308	7			1994-95, (3.75)
	6035 514	5			1996, w/o Dome Head, (.500-13-3.750)
	6035 515	2			1996, w/Dome Head, (.500-13-3.750)
8	6035 516	7			BOLT/STUD, Cylinder Head, (.500-13x4.500/.437-14x1.00) ***
9	4636 982	1			GASKET PACKAGE, Engine Upper
10					COVER, Cylinder Head
	5302 0543	1			1994-95, w/Sealant
	5302 0323	1			1996, w/o Sealant
11					BOLT/STUD ***
	6034 477	AR			1994-95, (.25-20x1.970)
	6035 567	AR			1996, (.250-20x2.00)
12					BOLT, Cover
	6034 478	AR			1994-95, (.250-20x1.130)
	6035 566	AR			1996, (.250-20x1.00)
13					CAP, Oil Filler
	5302 0555	1			1994
	5302 0554	1		YJ	1995
	5302 0555	1		XJ,ZJ	1995
	5302 0554	1			1996
14					GASKET, Cylinder Head Cover
	5093 785AA	1			1994,95
	5302 0758	1			1996
15	5302 0598	15			SLEEVE, Torque Limiter 1996
16	5301 0424	15			GROMMET, Isolator 1996
17	6035 687	1			PLUG, Temperature Sending Hole

MODEL CODES:

72=2 DR Wagon
74=4 DR Wagon
77=Open Body 93" Whlbase
78=Open Body 103" Whlbase - Export
T=2WD
J,N=4WD
U=4WD (RHD)

BODY STYLES:

YJ=Wrangler (4X4) "S"
Weangler (4X4) SE
Wrangler (4X4) Sahara
Wrangler (4X4) Renegade
XJ=Cherokee SE
Cherokee Sport
Cherokee Country
ZJ=Grand Cherokee SE
Grand Cherokee Laredo
Grand Cherolee Limited
ZG=Grand Cherokee European
Y1=Wrangler
X1=Cherokee
Z1=Grand Cherokee
KDX=Vehicles

AR = Use as Required - = Non Illustrated Part P.A.R. = Paint as Required

« RETURN TO GROUP INDEX

CYLINDER BLOCK 4.0L ENGINE
Figure 9B-310

9B-310F

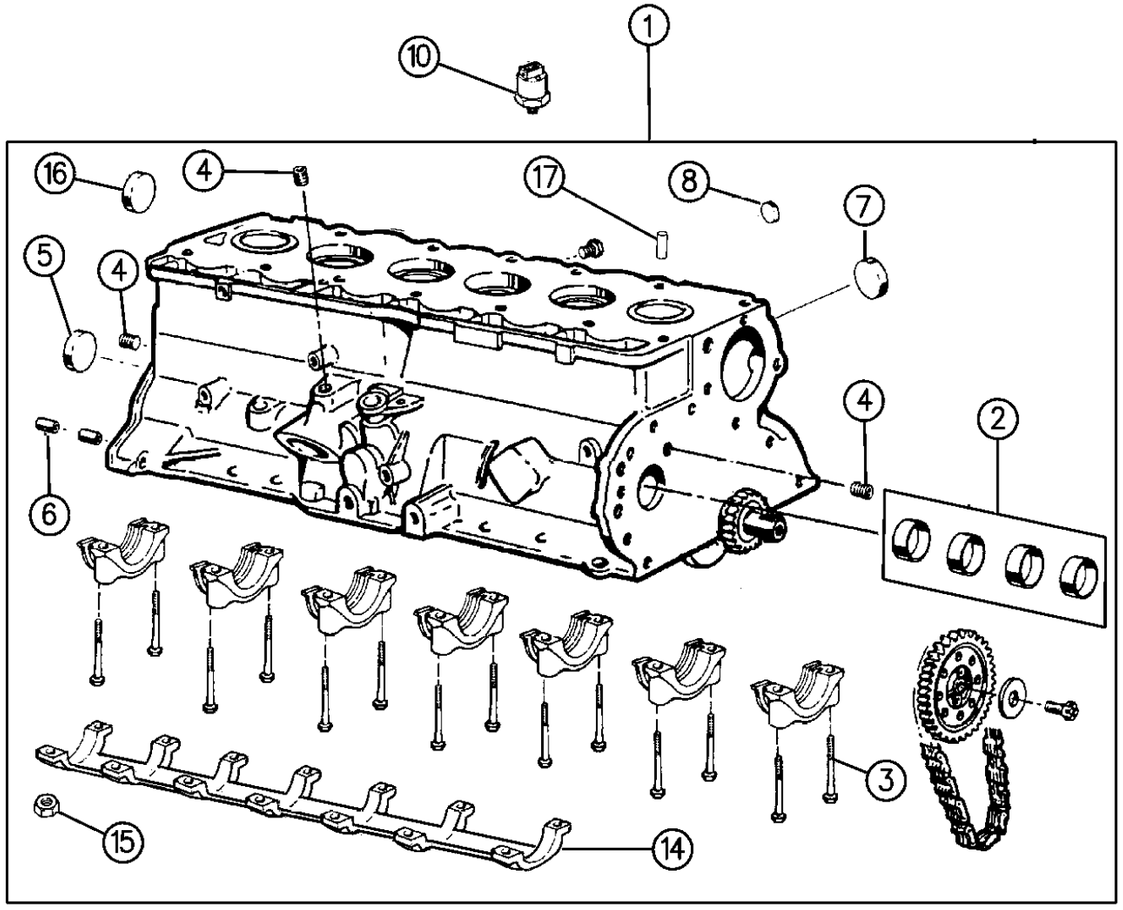

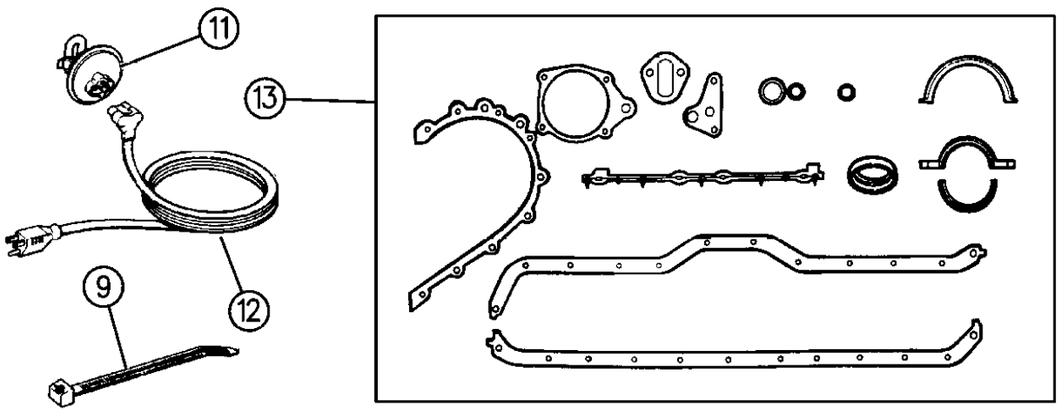

94J56 310

ITEM	PART NUMBER	QTY	BODY	MODEL	DESCRIPTION
1					BLOCK, Short, w/o Camshaft ***
	4778 882	1			1994-95
	4883 025	1			1996
2					BEARING PACKAGE, Camshaft ***
	J320 5711	1			Standard
	J320 8985	1			.010 O/S
3					BOLT/STUD ***
	J400 6948	14			Bolt
	6035 207	14			Stud, (.500-13/.375-16x3.970)
4	6034 166	4			PLUG
5	J317 2313	1			PLUG, Core Hole
6	J400 5148	2			PIN, Trans. to Cylinder Block
7	J310 5394	4			PLUG, (2")
8	J317 8449	2			PLUG, (1")
9					STRAP
	6015 756	AR			(200mm)
	J369 3058	AR			(300mm)
	6016 155	AR			(350mm)
10	3300 2933	1			SENSOR, Knock
11	5300 9803	1			HEATER, Engine Block
12					CORD, Power Supply
	5601 6834	1		YJ	
	J575 2677	1		XJ,ZJ	
13	4740 008	1			GASKET PACKAGE, Engine Lower
14	5302 0566	1			BRACE, Main Bearing Cap
15	0152 474	14			NUT, Brace, (3.75-16)
16	5302 0465	1			PLUG, Hole
17	0141 215	2			PIN, Dowel, Cylinder Block to Cylinder Head

MODEL CODES:

72=2 DR Wagon
74=4 DR Wagon
77=Open Body 93" Whlbase
78=Open Body 103" Whlbase - Export
T=2WD
J,N=4WD
U=4WD (RHD)

BODY STYLES:

YJ=Wrangler (4X4) "S"
Weangler (4X4) SE
Wrangler (4X4) Sahara
Wrangler (4X4) Renegade
XJ=Cherokee SE
Cherokee Sport
Cherokee Country
ZJ=Grand Cherokee SE
Grand Cherokee Laredo
Grand Cherolee Limited
ZG=Grand Cherokee European
Y1=Wrangler
X1=Cherokee
Z1=Grand Cherokee
KDX=Vehicles

AR = Use as Required - = Non Illustrated Part P.A.R. = Paint as Required

« RETURN TO GROUP INDEX

CRANKSHAFT, PISTON, AND TORQUE CONVERTER 4.0L ENGINE
Figure 9B-410

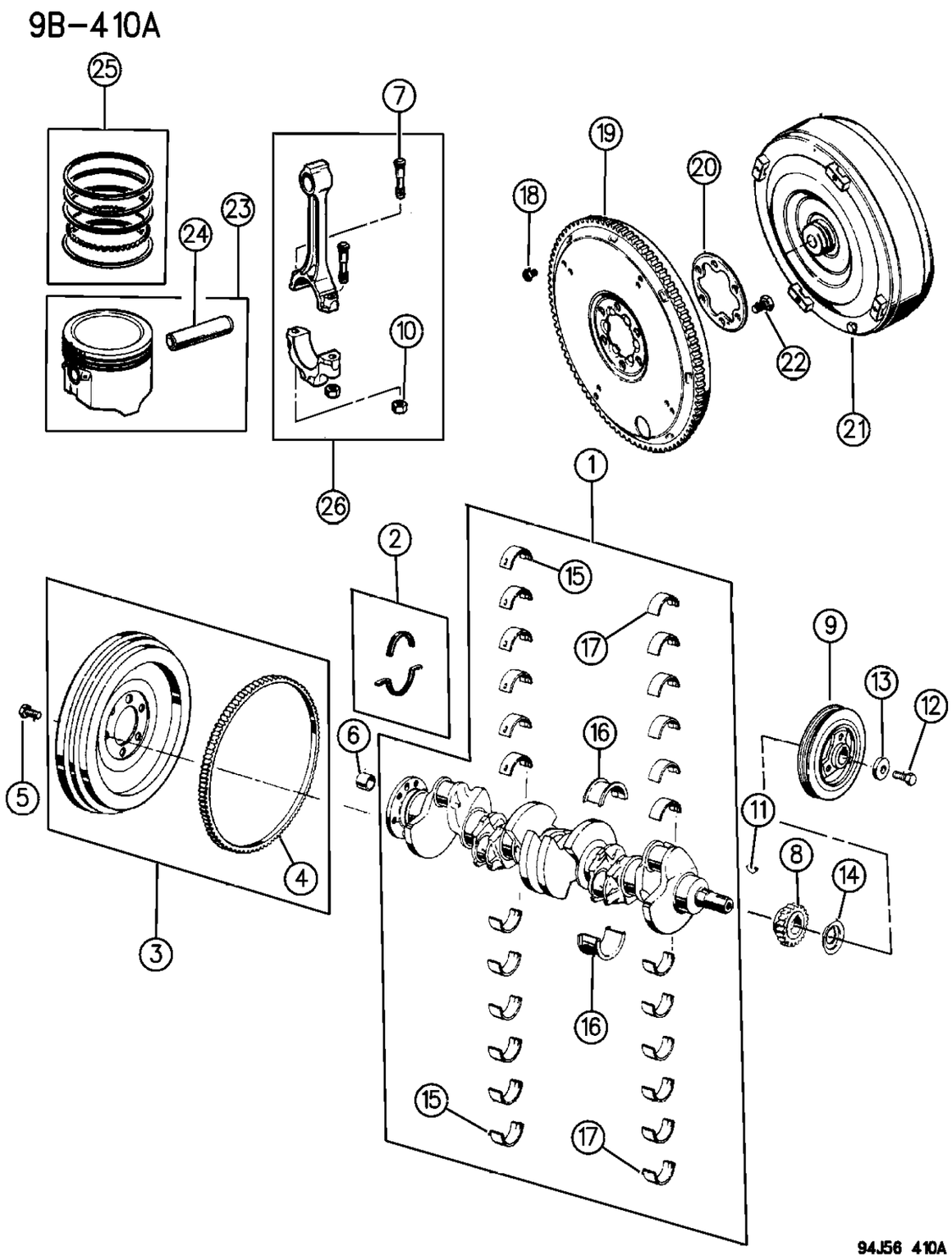

ITEM	PART NUMBER	QTY	BODY	MODEL	DESCRIPTION
1	4728 882	1			CRANKSHAFT PACKAGE ***
2	4778 126	1			SEAL PACKAGE, Crankshaft
3					FLYWHEEL ***
	5300 5524	1			1994-95
	5302 0519	1			1996
4	J317 9741	1			GEAR, Ring
5	J317 0524	6			BOLT, Flywheel to Crankshaft
6					BEARING, Pilot
	5300 9181	1			Bearing
	5300 9180	1			Sleeve and Bearing
7	5302 0123	12			BOLT, Connecting Rod
8	5302 0443	1			SPROCKET, Crankshaft
9	3300 2920	1			DAMPER, Vibration
10	J400 6385	12			NUT, Connecting Rod Cap
11	6034 749	1			KEY, Shaft
12	S018 1698	1			BOLT
13	J323 0155				WASHER
14	J317 3076	1			SLINGER, Oil
15					BEARING PACKAGE, Main
	8350 7079	6			Standard
	8350 7080	6			.001 O/S
	8350 7083	6			.010 O/S
16					BEARING PACKAGE, Thrust ***
	8350 7084	1			Standard
	8350 7086	1			.001 O/S
	8350 7090	1			.010 O/S
17					BEARING PACKAGE, Rod ***
	8350 0300	6			Standard
	8350 1397	6			.001 O/S
	8350 0301	6			.010 O/S
18					BOLT, Drive Plate to Converter
	J321 4097	4	YJ,ZJ		
	3420 2497	4	XJ		
19					PLATE, Torque Converter Drive
	5300 6328	1	YJ		
					42RE
	5300 6328	1	ZJ		1994-95
	5211 8257	1	ZJ		1996
					Aisin Warner
	5211 7761	1	XJ		1994-95
	5211 8551	1	XJ		1996
20	J321 4094	1			REINFORCEMENT

MODEL CODES:

72=2 DR Wagon
74=4 DR Wagon
77=Open Body 93" Whlbase
78=Open Body 103" Whlbase - Export
T=2WD
J,N=4WD
U=4WD (RHD)

BODY STYLES:

YJ=Wrangler (4X4) "S"
Weangler (4X4) SE
Wrangler (4X4) Sahara
Wrangler (4X4) Renegade
XJ=Cherokee SE
Cherokee Sport
Cherokee Country
ZJ=Grand Cherokee SE
Grand Cherokee Laredo
Grand Cherolee Limited
ZG=Grand Cherokee European
Y1=Wrangler
X1=Cherokee
Z1=Grand Cherokee
KDX=Vehicles

AR = Use as Required - = Non Illustrated Part P.A.R. = Paint as Required

CRANKSHAFT, PISTON, AND TORQUE CONVERTER 4.0L ENGINE
Figure 9B-410

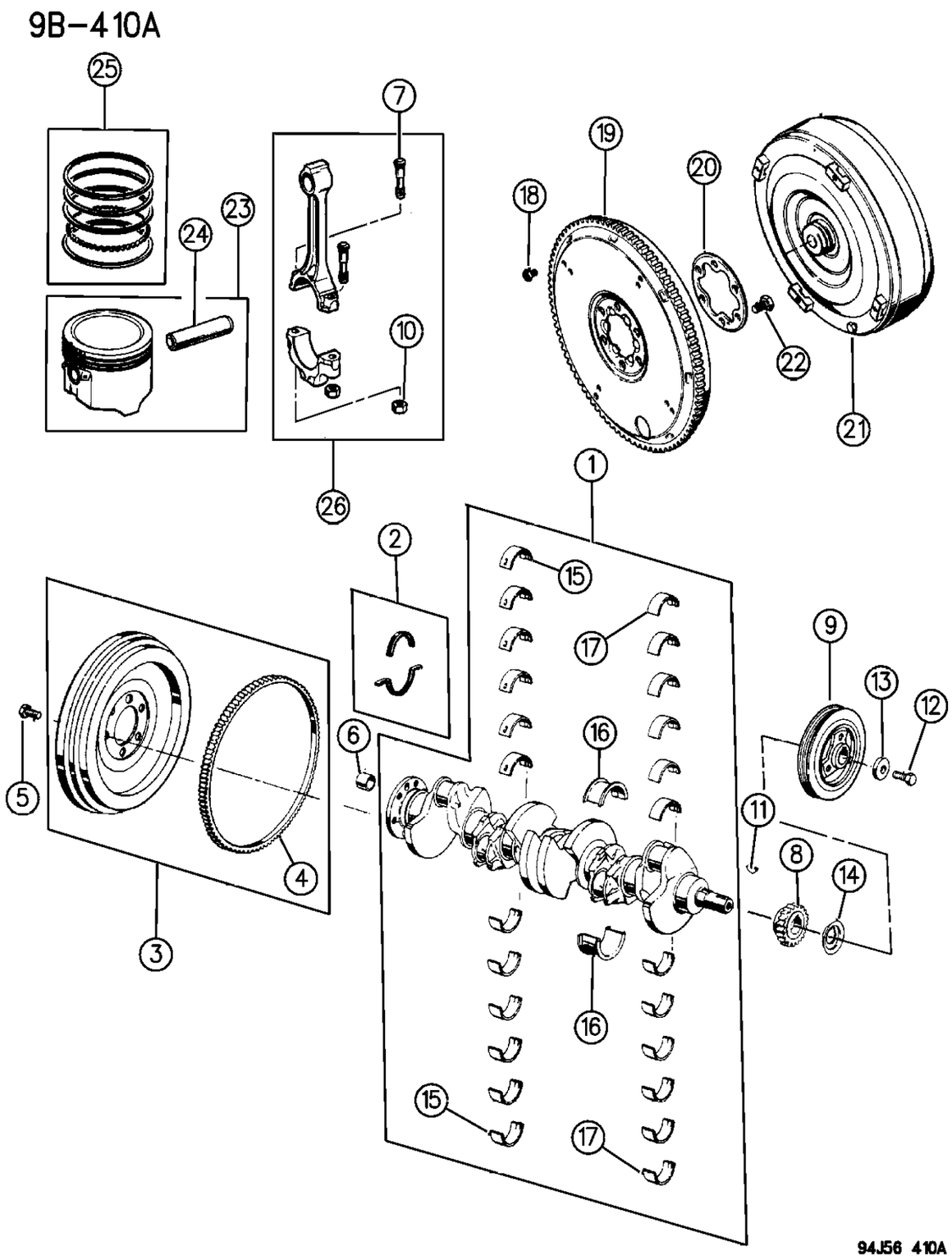

ITEM	PART NUMBER	QTY	BODY	MODEL	DESCRIPTION
21					CONVERTER, Torque, (Lock-Up)
	5211 7703	1		YJ	
					42RE
	5211 7703	1		ZJ	1994-95
	5211 9783	1		ZJ	1996
	5300 3431	1		XJ,ZJ	Aisin Warner
22	J315 1407	6			BOLT, Torque Converter Plate to Crankshaft
23					PISTON ASSEMBLY, Standard ***
					1994-95
	4773 157	6			"B" Size, 3.8746
	4773 158	6			"C" Size, 3.8750
	4773 159	6			"D" Size, 3,8754
	4773 456	6			"E" Size, 3.8758
	4773 568	6			"F" Size, 3.8762
					1996
	4798 329	6			"B" Size, 3.8742
	4798 330	6			"C" Size, 3.8746
	4798 331	6			"D" Size, 3,8750
	4798 332	6			"E" Size, 3.8754
	4798 333	6			"F" Size, 3.8758
24		6			PIN, Piston, Standard, (Serviced in Piston Assy.)
25					RING PACKAGE, Engine ***
	4762 462	1			1994-95
	4798 878	1			1996
26		6			ROD, Connecting, (Serviced in Piston Assy.)

MODEL CODES:

72=2 DR Wagon
74=4 DR Wagon
77=Open Body 93" Whlbase
78=Open Body 103" Whlbase - Export
T=2WD
J,N=4WD
U=4WD (RHD)

BODY STYLES:

YJ=Wrangler (4X4) "S"
Weangler (4X4) SE
Wrangler (4X4) Sahara
Wrangler (4X4) Renegade
XJ=Cherokee SE
Cherokee Sport
Cherokee Country
ZJ=Grand Cherokee SE
Grand Cherokee Laredo
Grand Cherolee Limited
ZG=Grand Cherokee European
Y1=Wrangler
X1=Cherokee
Z1=Grand Cherokee
KDX=Vehicles

AR = Use as Required - = Non Illustrated Part P.A.R. = Paint as Required

CAMSHAFT AND VALVE 4.0L ENGINE
Figure 9B-510

9B-510

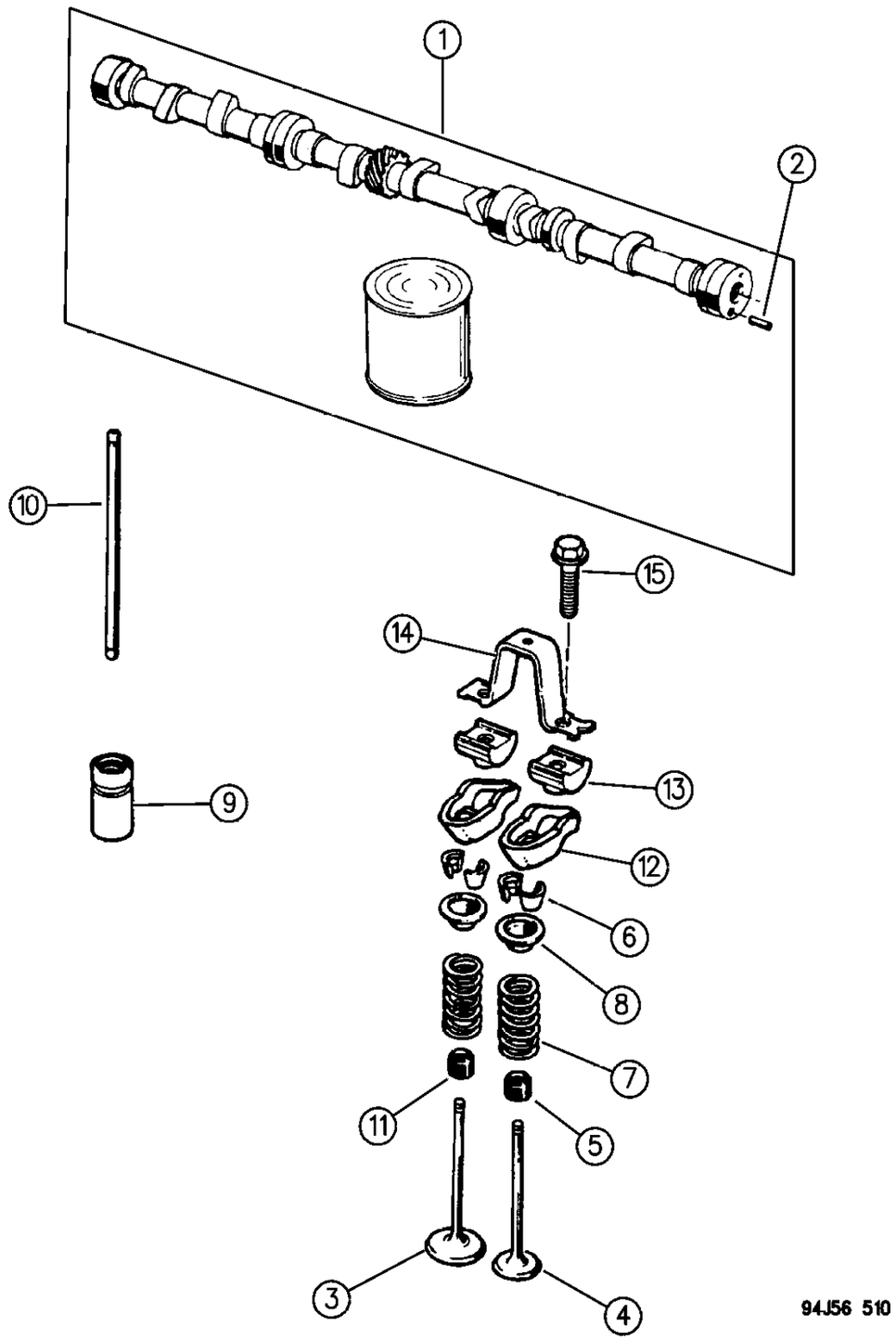

ITEM	PART NUMBER	QTY	BODY	MODEL	DESCRIPTION
1					CAMSHAFT, w/Dowel Pin
	3300 2981	1			1994-95
	5302 0438	1			1996
2	J045 6384	1			PIN, Camshaft Front Spring
3					VALVE, Intake
	3300 3515	6			Standard
	3300 3519	6			.003 O/S
	3300 3575	6			.015 O/S
4					VALVE, Exhaust
	4637 537	6			Standard
	4637 538	6			.003 O/S
	4637 539	6			.015 O/S
5					SEAL, Exhaust Valve
	5300 9887	6			Standard
	3300 2733	6			.015 O/S
6	3300 3521	24			LOCK, Valve Spring Retainer
7					SPRING, Valve
	5302 1056	12			1994-95
	5302 0556	12			1996
8	3300 4626	12			RETAINER
9	J318 9883	12			TAPPET, Valve Hydraulic
10	3300 2986	12			PUSHROD ***
11					SEAL, Intake Valve
	5300 9886	6			Standard
	3300 3016	6			.015 O/S
12	4778 743	12			ARM, Valve Rocker
13	J323 5090	12			PIVOT, Rocker Arm
14	J323 6513	6			BRIDGE, Rocker Arm ***
15	J942 5708	12			BOLT

MODEL CODES:

72=2 DR Wagon
74=4 DR Wagon
77=Open Body 93" Whlbase
78=Open Body 103" Whlbase - Export
T=2WD
J,N=4WD
U=4WD (RHD)

BODY STYLES:

YJ=Wrangler (4X4) "S"
Weangler (4X4) SE
Wrangler (4X4) Sahara
Wrangler (4X4) Renegade
XJ=Cherokee SE
Cherokee Sport
Cherokee Country
ZJ=Grand Cherokee SE
Grand Cherokee Laredo
Grand Cherolee Limited
ZG=Grand Cherokee European
Y1=Wrangler
X1=Cherokee
Z1=Grand Cherokee
KDX=Vehicles

AR = Use as Required - = Non Illustrated Part P.A.R. = Paint as Required

« RETURN TO GROUP INDEX

TIMING COVER 4.0L ENGINE
Figure 9B-610

9B-610

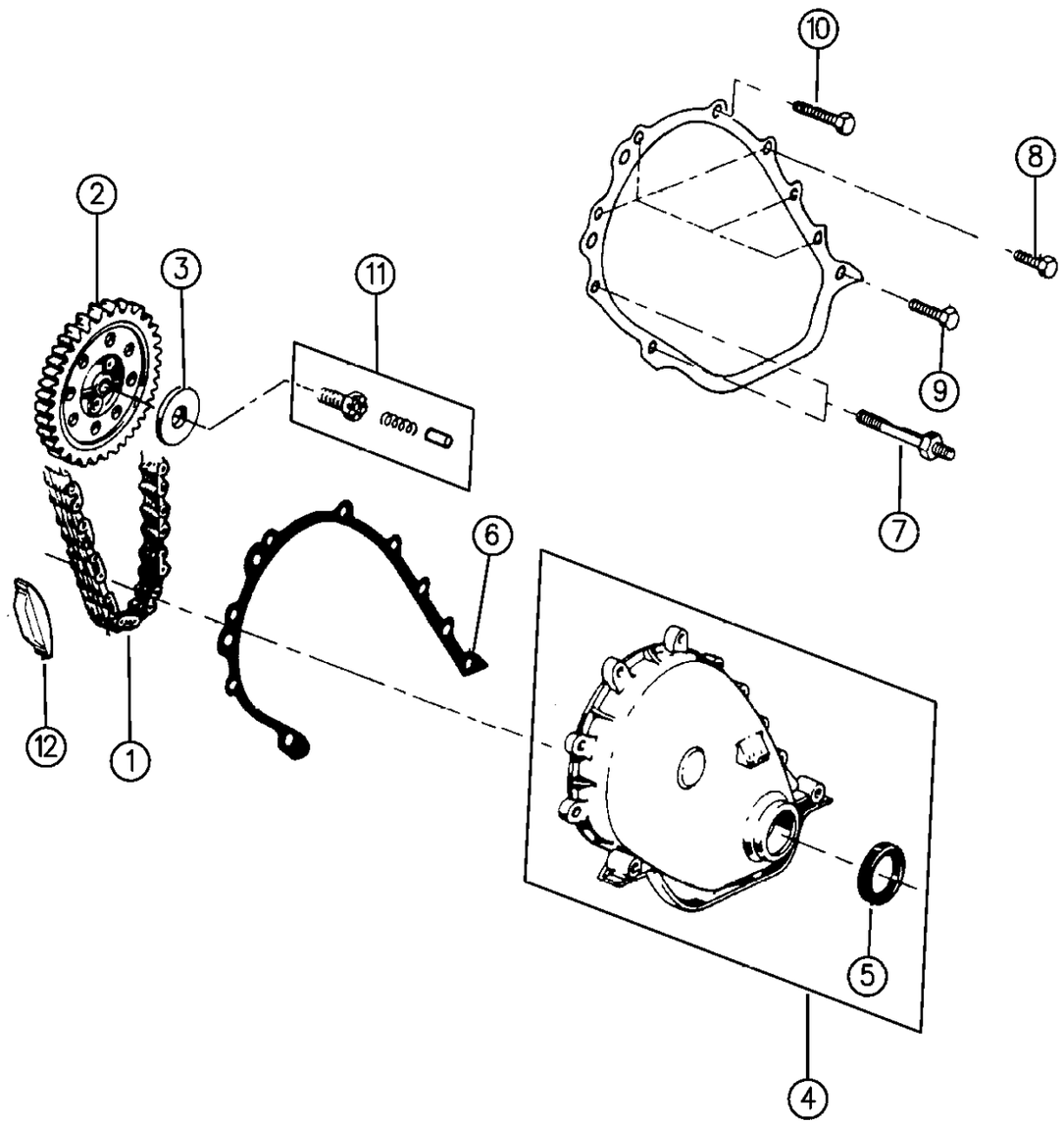

ITEM	PART NUMBER	QTY	BODY	MODEL	DESCRIPTION
1	5302 0444	1			CHAIN, Timing
2	5302 0445	1			SPROCKET, Camshaft
3	J317 3284	1			WASHER, Camshaft Sprocket
4	5302 0222				COVER, Timing Case, w/Seal
5	3300 4681	1			SEAL, Oil, Crankshaft Front
6	5302 0487	1			GASKET, Engine Cover Front
7	6035 744	1			BOLT/STUD, (5/16-18x3/8-16x2.575) ***
8	J400 6906	5			BOLT, (.75)
	6034 604	AR			BOLT, Shoulder, (.312-18x1.56)
9	6034 914	1			BOLT, Front Cover
10	6034 604	AR			BOLT
11	8350 2890	1			PIN PACKAGE, Cam Thrust ***
12	3300 3446	1			BUMPER, Timing Chain

MODEL CODES:

72=2 DR Wagon
74=4 DR Wagon
77=Open Body 93" Whlbase
78=Open Body 103" Whlbase - Export
T=2WD
J,N=4WD
U=4WD (RHD)

BODY STYLES:

YJ=Wrangler (4X4) "S"
Weangler (4X4) SE
Wrangler (4X4) Sahara
Wrangler (4X4) Renegade
XJ=Cherokee SE
Cherokee Sport
Cherokee Country
ZJ=Grand Cherokee SE
Grand Cherokee Laredo
Grand Cherolee Limited
ZG=Grand Cherokee European
Y1=Wrangler
X1=Cherokee
Z1=Grand Cherokee
KDX=Vehicles

AR = Use as Required - = Non Illustrated Part P.A.R. = Paint as Required

« RETURN TO GROUP INDEX

ENGINE OILING 4.0L ENGINE
Figure 9B-710

9B-710F

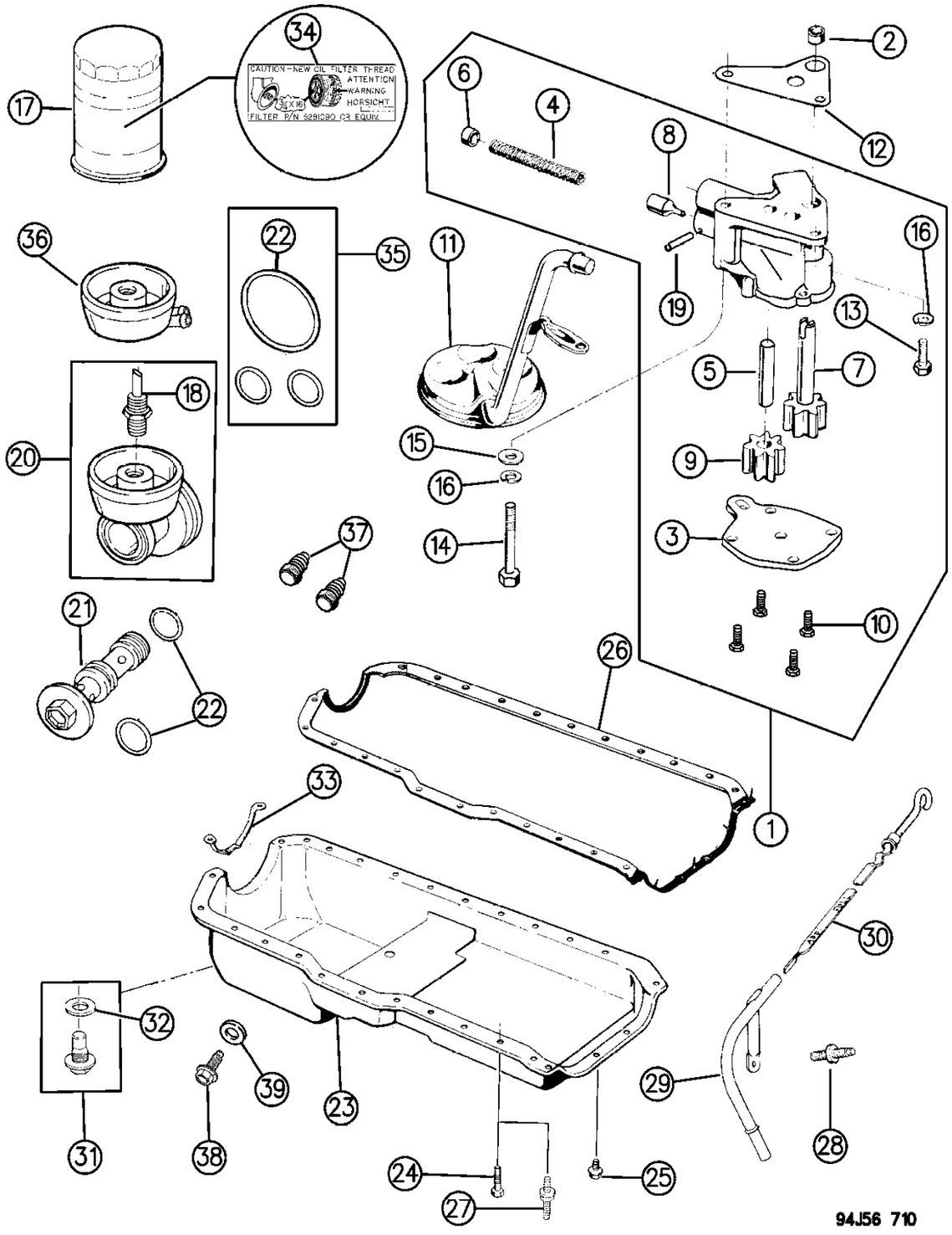

ITEM	PART NUMBER	QTY	BODY	MODEL	DESCRIPTION
1	J324 1399	1			PUMP ASSEMBLY, Oil ***
2	J400 5149	1			PIN
3	J324 1733	1			COVER, Oil Pump
4	J323 9668	1			SPRING, Oil Release Valve
5	J317 1956	1			SHAFT, Oil Pump Gear
6	J317 1958	1			RETAINER, Oil Pump
7	J317 2334	1			GEAR, Oil Pump Drive
8	J318 8661	1			PLUNGER, Oil Pump Release Valve
9	J319 6843	1			GEAR, Oil Pump Driven
10	J941 6852	4			SCREW
11	3300 2696	1			TUBE, Oil Pump Inlet
12	J317 2332	1			GASKET, Oil Pump
13	6022 235	1			BOLT
14					BOLT, Oil Pump
	J943 7670	1			1994, (2.62)
	0154 593	1			1995-96, (.312-18x2.625)
15	J012 0393	1			WASHER
16	J012 0214	2			WASHER, Lock
17					FILTER, Engine Oil
	5281 090	1			
	5302 0311	1			Egypt, Severe Use
18	5300 7563	1			CONNECTOR
19	J027 1448	1			PIN, Roll, (5/32x1.00)
20	5302 0080	1			ADAPTER, Oil Filter
21	5302 0237	1			BOLT, Oil Filter Adapter
22	3300 2972	1			O-RING, (2.48)
23					PAN, Engine Oil
	5302 0833	1			w/o Sensor Hole
	5302 0108	1			w/Sensor Hole
24	6034 732	19			SCREW, (.56)
25					SCREW/STUD, Oil Pan ***
	6034 483	3			Screw, (.75)
	6034 733	1			Stud, w/Washer, (.312-18/.25-20x1.680)
26	5300 7568	1			GASKET, Oil Pan
27	6034 734	AR			STUD, Bolt
28	J400 7448	1			STUD, Bolt, (.312-18x1.56)
29					TUBE, Engine Oil Indicator
	5302 0766	1			Up To 10-04-95
	5302 0782	1			After 10-04-95
30	3300 7167	1			INDICATOR, Engine Oil Level
	3300 7167	1			Up To 10-04-95
	5302 0760	1			After 10-04-95

MODEL CODES:

72=2 DR Wagon
74=4 DR Wagon
77=Open Body 93" Whlbase
78=Open Body 103" Whlbase - Export
T=2WD
J,N=4WD
U=4WD (RHD)

BODY STYLES:

YJ=Wrangler (4X4) "S"
Weangler (4X4) SE
Wrangler (4X4) Sahara
Wrangler (4X4) Renegade
XJ=Cherokee SE
Cherokee Sport
Cherokee Country
ZJ=Grand Cherokee SE
Grand Cherokee Laredo
Grand Cherolee Limited
ZG=Grand Cherokee European
Y1=Wrangler
X1=Cherokee
Z1=Grand Cherokee
KDX=Vehicles

AR = Use as Required - = Non Illustrated Part P.A.R. = Paint as Required

9B-710F

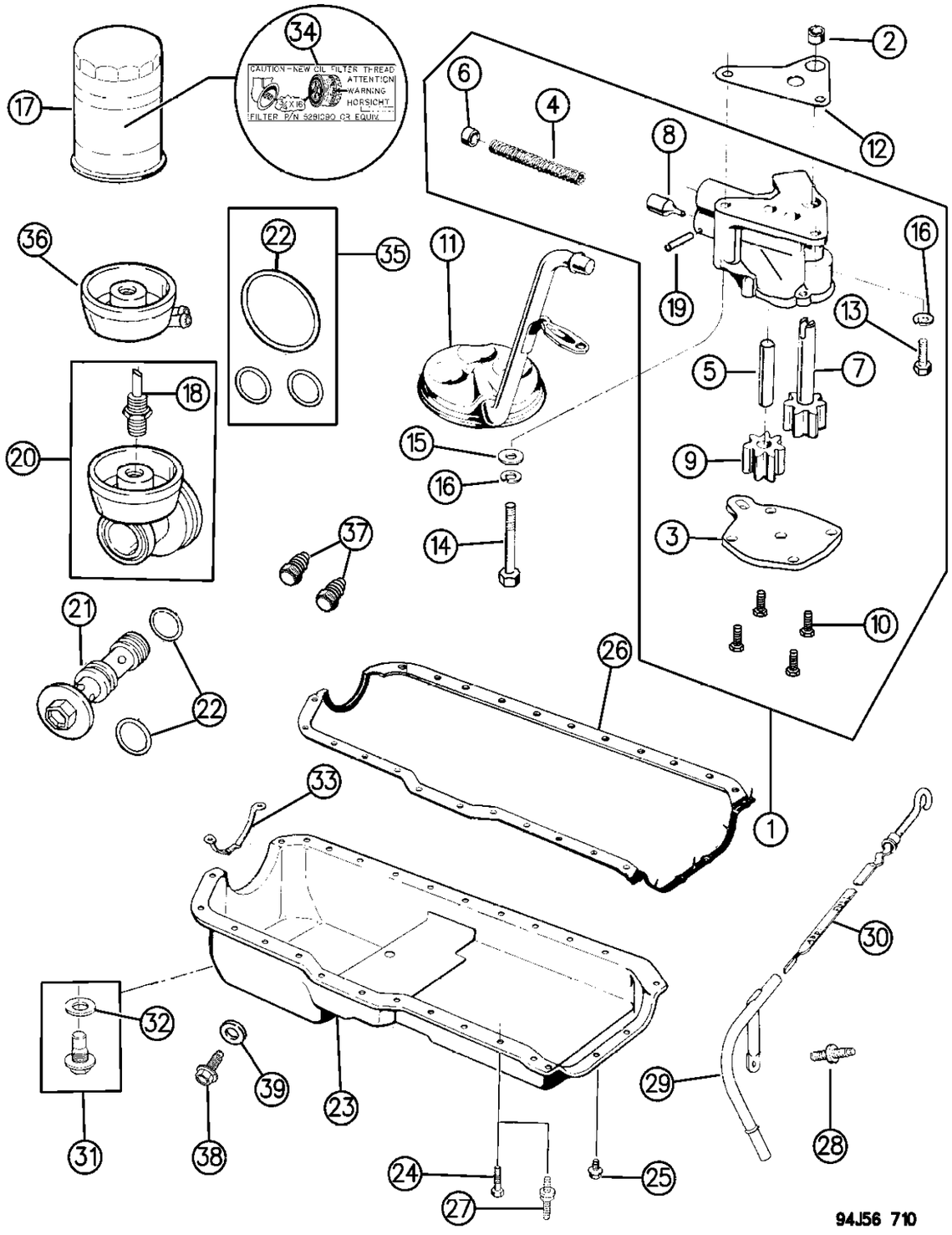

ITEM	PART NUMBER	QTY	BODY	MODEL	DESCRIPTION
31	6035 417	1			PLUG, w/Gasket, Oil Pan Drain
32		1			GASKET, Drain Plug, (Serviced in Plug)
33	J324 3116	1			SUPPORT, Oil Pan
34	5300 8907	1			DECAL, Oil Filter Thread I.D. ***
35	4720 363	1			SEAL PACKAGE, Oil Filter Adapter
					Contains:
					2-Adapter Bolt O-Rings
					1-Adapter O-Ring
36	4762 268	1			COOLER, Engine Oil ***
37	4762 270	2			CONNECTOR, Oil Cooler
38	6034 061	1			PLUG, Oil Pan Sensor
39	5302 0281	1			GASKET, Oil Pan Sensor Plug

MODEL CODES:

72=2 DR Wagon
74=4 DR Wagon
77=Open Body 93" Whlbase
78=Open Body 103" Whlbase - Export
T=2WD
J,N=4WD
U=4WD (RHD)

BODY STYLES:

YJ=Wrangler (4X4) "S"
Weangler (4X4) SE
Wrangler (4X4) Sahara
Wrangler (4X4) Renegade

XJ=Cherokee SE
Cherokee Sport
Cherokee Country

ZJ=Grand Cherokee SE
Grand Cherokee Laredo
Grand Cherolee Limited
ZG=Grand Cherokee European

Y1=Wrangler
X1=Cherokee
Z1=Grand Cherokee
KDX=Vehicles

AR = Use as Required - = Non Illustrated Part P.A.R. = Paint as Required

MANIFOLD, INTAKE AND EXHAUST 4.0L ENGINE
Figure 9B-810

9B-810A

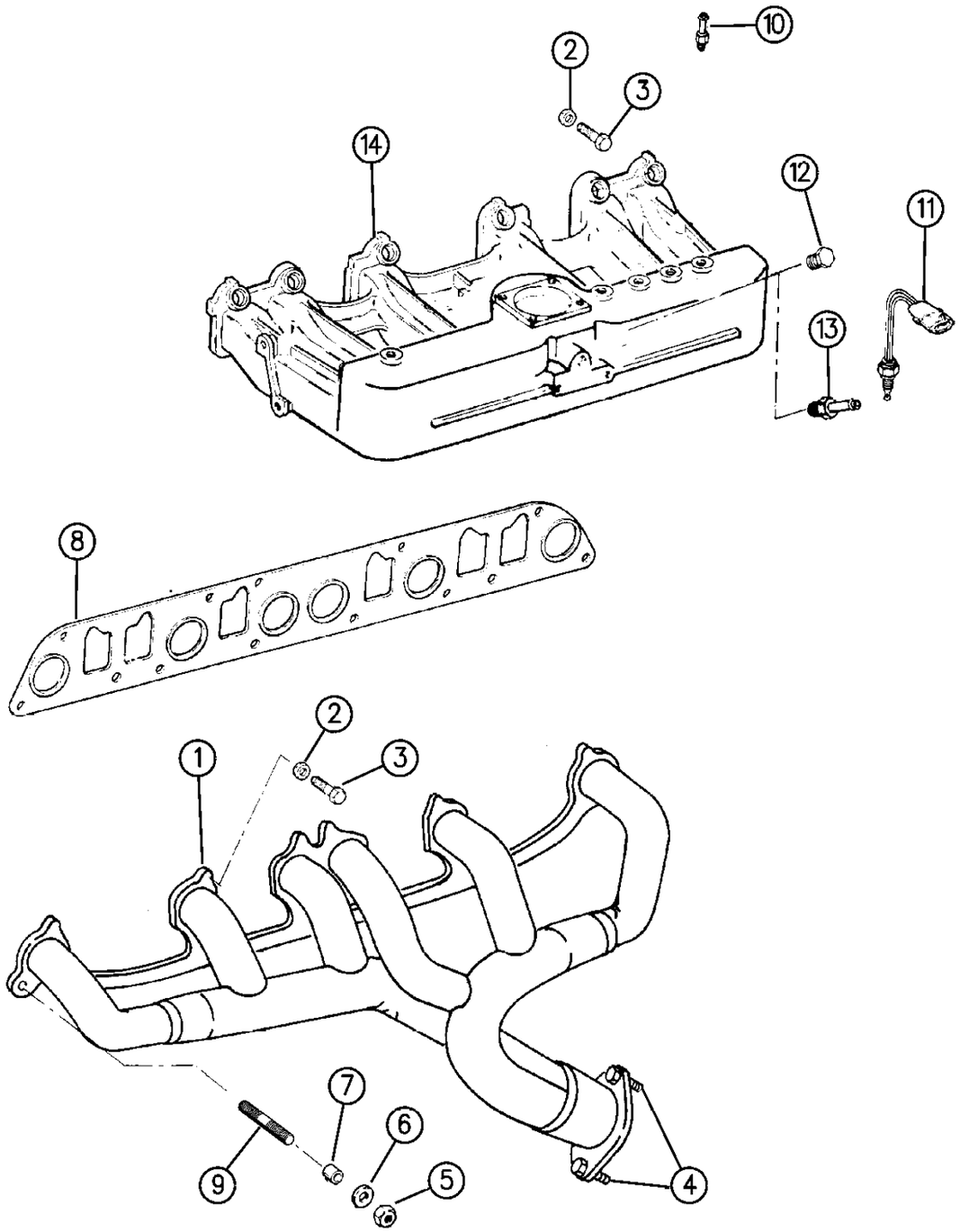

ITEM	PART NUMBER	QTY	BODY	MODEL	DESCRIPTION
1	3300 7072	1			MANIFOLD, Exhaust
2	3300 4255	8			WASHER
3	J018 6622	9			BOLT
4	J400 7109	2			STUD
5	J535 1688	2			NUT
6	3300 4255	11			CLAMP
7	3300 4026	2			SPACER
8	5301 0238	1			GASKET, Intake and Exhaust
9	5301 0165	2			STUD, Exhaust Manifold
10					FITTING, Vacuum ***
	3300 2327	1			1994
	5303 0756	1			1995-96
11	3300 4280	1			SENSOR, Air Temperature
12	J812 1104	AR			PLUG, (1/4x18PT)
13	3300 2327	AR			NIPPLE, (1/4x18PTx3/8)
14					MANIFOLD, Intake
	3300 7067	1			1994-95
	5301 0237	1			1996

MODEL CODES:

72=2 DR Wagon
74=4 DR Wagon
77=Open Body 93" Whlbase
78=Open Body 103" Whlbase - Export
T=2WD
J,N=4WD
U=4WD (RHD)

BODY STYLES:

YJ=Wrangler (4X4) "S"
Weangler (4X4) SE
Wrangler (4X4) Sahara
Wrangler (4X4) Renegade
XJ=Cherokee SE
Cherokee Sport
Cherokee Country
ZJ=Grand Cherokee SE
Grand Cherokee Laredo
Grand Cherolee Limited
ZG=Grand Cherokee European
Y1=Wrangler
X1=Cherokee
Z1=Grand Cherokee
KDX=Vehicles

AR = Use as Required - = Non Illustrated Part P.A.R. = Paint as Required

« RETURN TO GROUP INDEX

CRANKCASE VENTILATION 4.0L ENGINE
Figure 9B-910

9B-910B

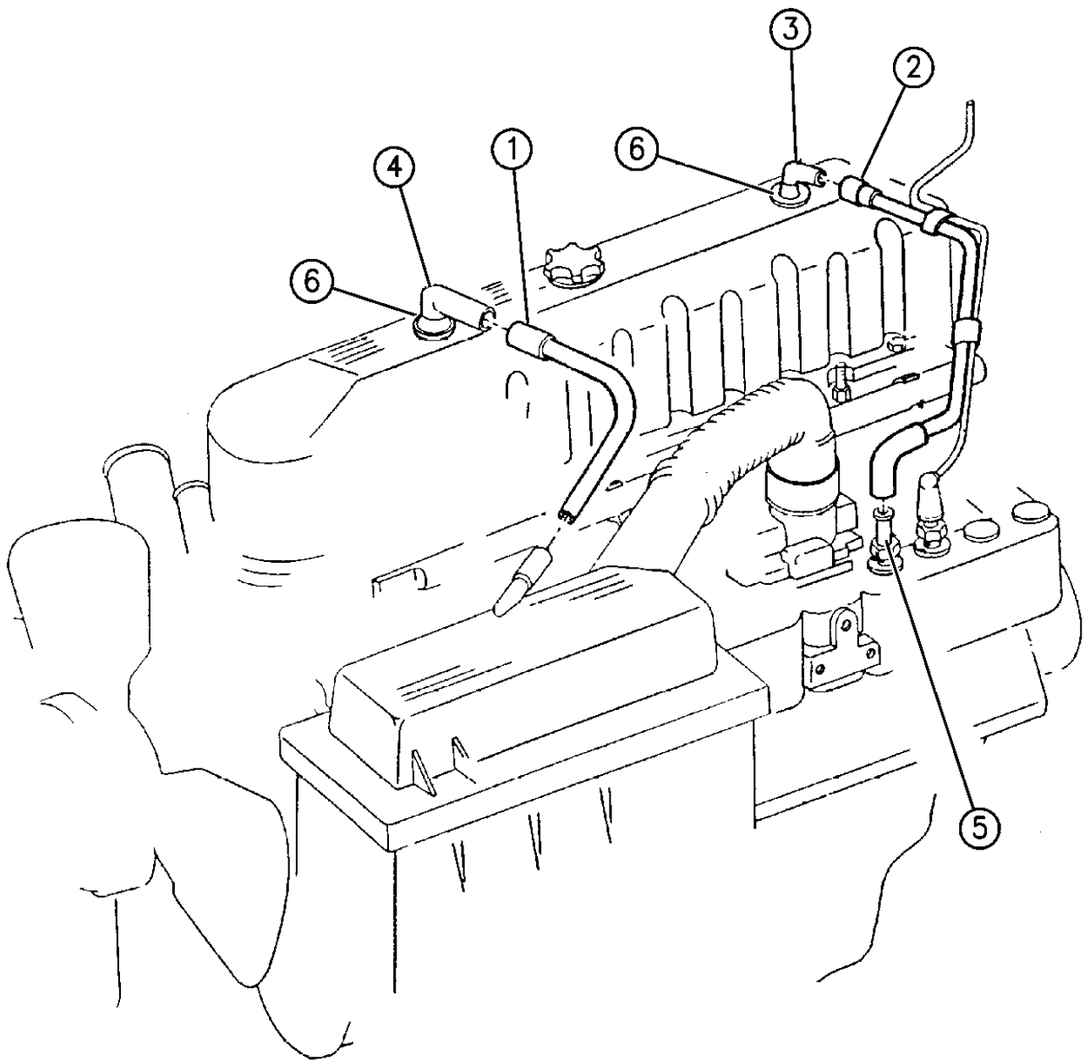

94J56 910

ITEM	PART NUMBER	QTY	BODY	MODEL	DESCRIPTION
1					TUBE ASSEMBLY, CCV to Air Cleaner ***
	5300 6237	1		YJ	
	5300 6239	1		XJ	
	5303 0241	1		Y1	KDX Egypt, w/Severe Use Air Cleaner
	5300 7422	1		ZJ	
2					TUBE ASSEMBLY, CCV To Manifold ***
	5303 0728	1		YJ	
	5303 0726	1		XJ	1994-95
	5303 0729	1		ZJ	1994-95
	5303 0561	1			1996
3	5303 0495	1			TUBE and FITTING ASSEMBLY, w/Orifice ***
4					TUBE and FITTING ASSEMBLY, w/o Orifice ***
	5303 0497	1			
	5303 0497	1		XJ	1996, 2.5L Eng.
	5303 0991	1		XJ	1996, 4.0L Eng.
5					FITTING, Crankcase Vent Vacuum ***
	5303 0599	1		XJ	
	5302 0027	1		ZJ	
6	2946 079	2			GROMMET, CCV

MODEL CODES:

72=2 DR Wagon
74=4 DR Wagon
77=Open Body 93" Whlbase
78=Open Body 103" Whlbase - Export
T=2WD
J,N=4WD
U=4WD (RHD)

BODY STYLES:

YJ=Wrangler (4X4) "S"
Weangler (4X4) SE
Wrangler (4X4) Sahara
Wrangler (4X4) Renegade
XJ=Cherokee SE
Cherokee Sport
Cherokee Country
ZJ=Grand Cherokee SE
Grand Cherokee Laredo
Grand Cherolee Limited
ZG=Grand Cherokee European
Y1=Wrangler
X1=Cherokee
Z1=Grand Cherokee
KDX=Vehicles

AR = Use as Required - = Non Illustrated Part P.A.R. = Paint as Required

« RETURN TO GROUP INDEX

ENGINE MOUNTING 4.0L ENGINE YJ BODY
Figure 9B-1010

9B-1010A

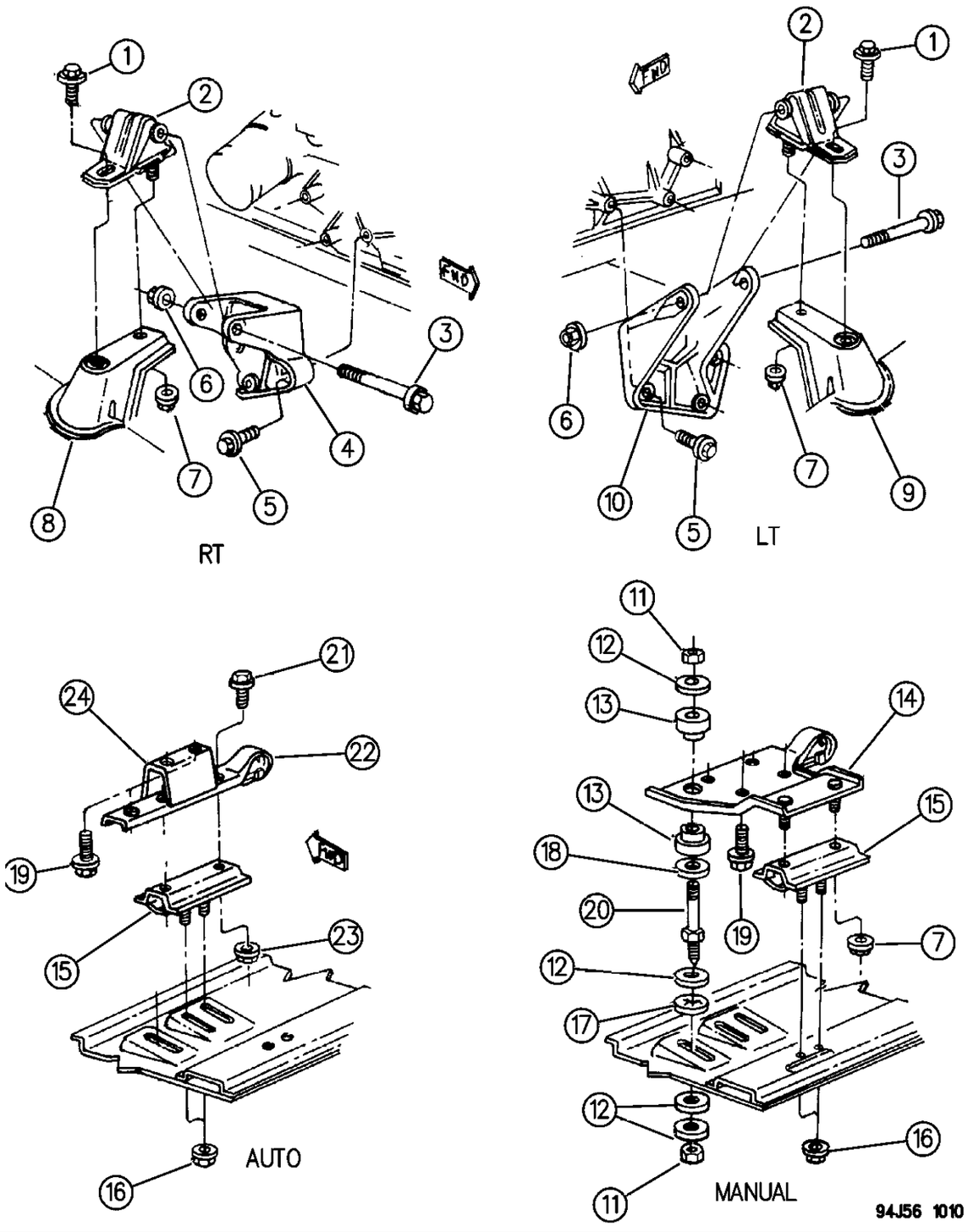

ITEM	PART NUMBER	QTY	BODY	MODEL	DESCRIPTION
1	3420 1559	1			BOLT
2	5201 9201	2			CUSHION, Support Front
3	3420 2606	2			BOLT, Cushion to Engine Bracket
4					BRACKET, Rt., Support
	5200 2783	1			Up To, 2-1-95
	5202 0270	1			After, 2-1-95
5	6034 989	6			BOLT, (.375-16x1.125)
6	6502 697	2			NUT
7	6502 135	4			NUT, Engine Mount
8	5204 0335	1			BRACKET ASSEMBLY, Rt. ***
9	5204 0333	1			BRACKET ASSEMBLY, Lt. ***
10	5204 0269	1			BRACKET, Lt., Support
11	J941 1783	2			NUT
12	J094 5269	4			WASHER
13	J094 5266	2			INSULATOR
14	5200 3925	1			BRACKET, Torque Arm
15	5201 9386	1			CUSHION, Trans. Support Rear
16	3420 2013	2			NUT, w/Washer
17	J400 0235	1			NUT, Push
18	J094 1399	2			WASHER
19		AR			BOLT, (7/16x14x1-1/8), (Not Serviced)
20	J535 8879	1			STUD
21		2			SCREW, Cushion to Bracket, (7/16-14x1.00), (Not Serviced)
22	5200 3045	1			BRACKET ASSEMBLY, Torque Arm, w/Exhaust Hanger ***
23	J400 4005	2			NUT
24	5200 3041	1			BRACKET, Torque Arm

MODEL CODES:

72=2 DR Wagon
74=4 DR Wagon
77=Open Body 93" Whlbase
78=Open Body 103" Whlbase - Export
T=2WD
J,N=4WD
U=4WD (RHD)

BODY STYLES:

YJ=Wrangler (4X4) "S"
Weangler (4X4) SE
Wrangler (4X4) Sahara
Wrangler (4X4) Renegade
XJ=Cherokee SE
Cherokee Sport
Cherokee Country
ZJ=Grand Cherokee SE
Grand Cherokee Laredo
Grand Cherolee Limited
ZG=Grand Cherokee European
Y1=Wrangler
X1=Cherokee
Z1=Grand Cherokee
KDX=Vehicles

AR = Use as Required - = Non Illustrated Part P.A.R. = Paint as Required

« RETURN TO GROUP INDEX

ENGINE MOUNTING 4.0L ENGINE XJ BODY
Figure 9B-1020

9B-1020A

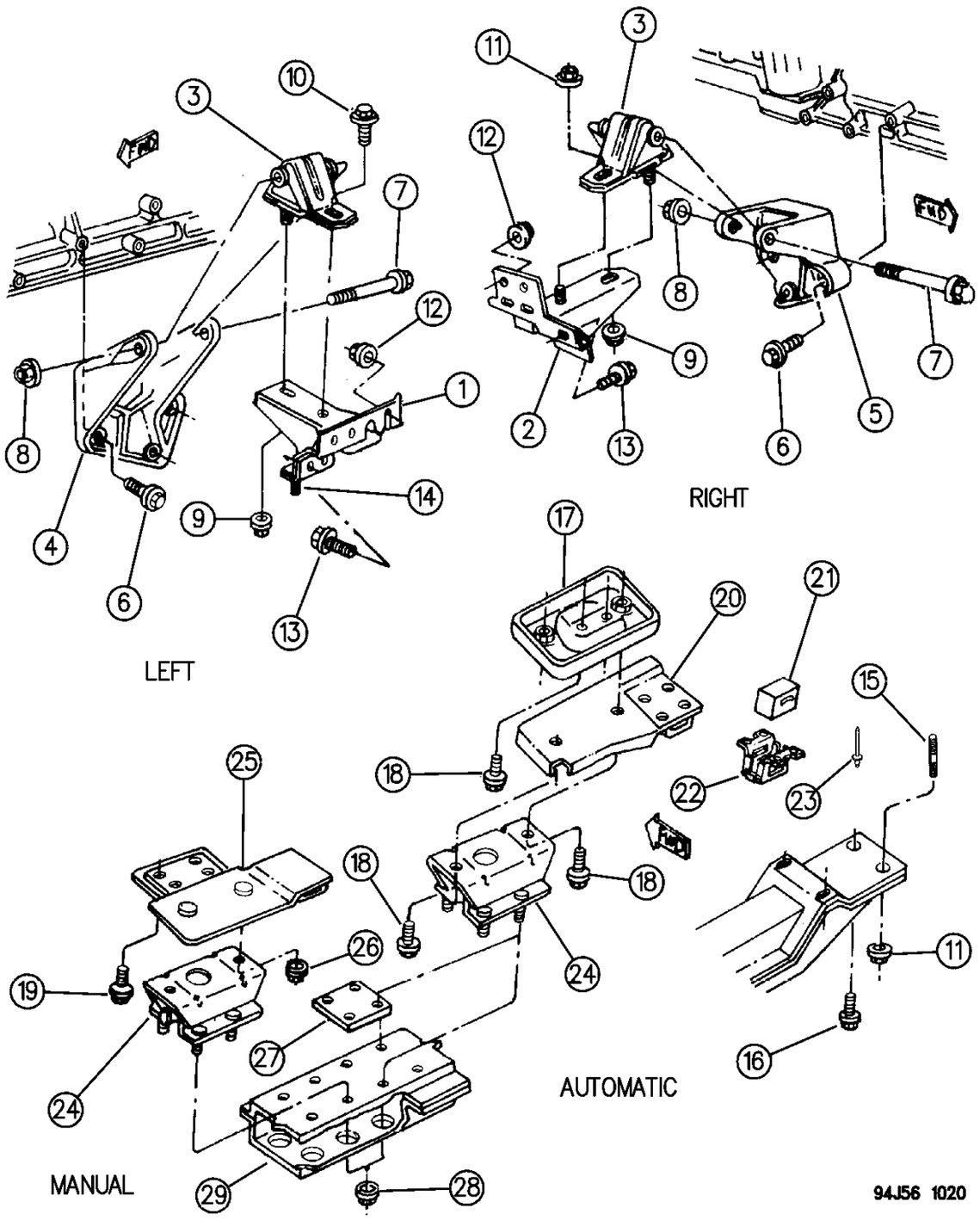

ITEM	PART NUMBER	QTY	BODY	MODEL	DESCRIPTION
1	5200 2603	1			BRACKET ASSEMBLY, Lt., Support Front ***
2					BRACKET ASSEMBLY, Rt., Support Front ***
	5201 9010	1			
	5205 8424	1			RHD
3					CUSHION, Support Front
	5201 9201	2			
	5202 0018	1			RHD, Right
	5201 9201	1			RHD, Left
4	5200 2607	1			BRACKET, Lt., Support Front
5					BRACKET, Rt., Support Front
	5200 2785	1			Up To, 2-1-95
	5202 0270	1			After, 2-1-95
6	6034 989	6			BOLT, (.375-16x1.125)
7	3420 2606	2			BOLT, Cushion to Engine Bracket
8	6502 697	AR			NUT
9	3420 1828	2			NUT, (M10x1.50)
10	3420 1559	1			BOLT
11					NUT
	6502 135	5			Man. Trans.
	6502 135	3			Auto Trans.
12	3420 1416	3			NUT, (M8x1.25)
13					BOLT
	6502 673	AR			Up To 3-11-96, (M10x1.5x40.00)
	6504 511	AR			After 3-11-96, (M10x1.5x40.00)
14	3420 2742	2			STUD
15	3420 1710	2			STUD
16	3420 1540	AR			BOLT, (30mm)
17	5200 2337	1			BRACKET ASSEMBLY, Trans. Support, 2WD ***
18	5201 7887	AR			BOLT
19	J400 7162	4			BOLT
20	5200 3071	1			BRACKET, Rear Support, Auto Trans.
21					INSULATOR
	5300 0101	1			1994-95
	5205 8884	1			1996
22	5300 0104	1			BRACKET
23	J400 6543	4			RIVET
24	5200 2334	1			CUSHION, Trans. Support Rear
25					BRACKET, Rear Support, Man. Trans.
	5200 3927	1			1994-95
	5205 8883	1			1996
26	6502 697	2			NUT
27	5200 3939	1			SPACER

MODEL CODES:

72=2 DR Wagon
74=4 DR Wagon
77=Open Body 93" Whlbase
78=Open Body 103" Whlbase - Export
T=2WD
J,N=4WD
U=4WD (RHD)

BODY STYLES:

YJ=Wrangler (4X4) "S"
Weangler (4X4) SE
Wrangler (4X4) Sahara
Wrangler (4X4) Renegade
XJ=Cherokee SE
Cherokee Sport
Cherokee Country
ZJ=Grand Cherokee SE
Grand Cherokee Laredo
Grand Cherolee Limited
ZG=Grand Cherokee European
Y1=Wrangler
X1=Cherokee
Z1=Grand Cherokee
KDX=Vehicles

AR = Use as Required - = Non Illustrated Part P.A.R. = Paint as Required

9B-1020A

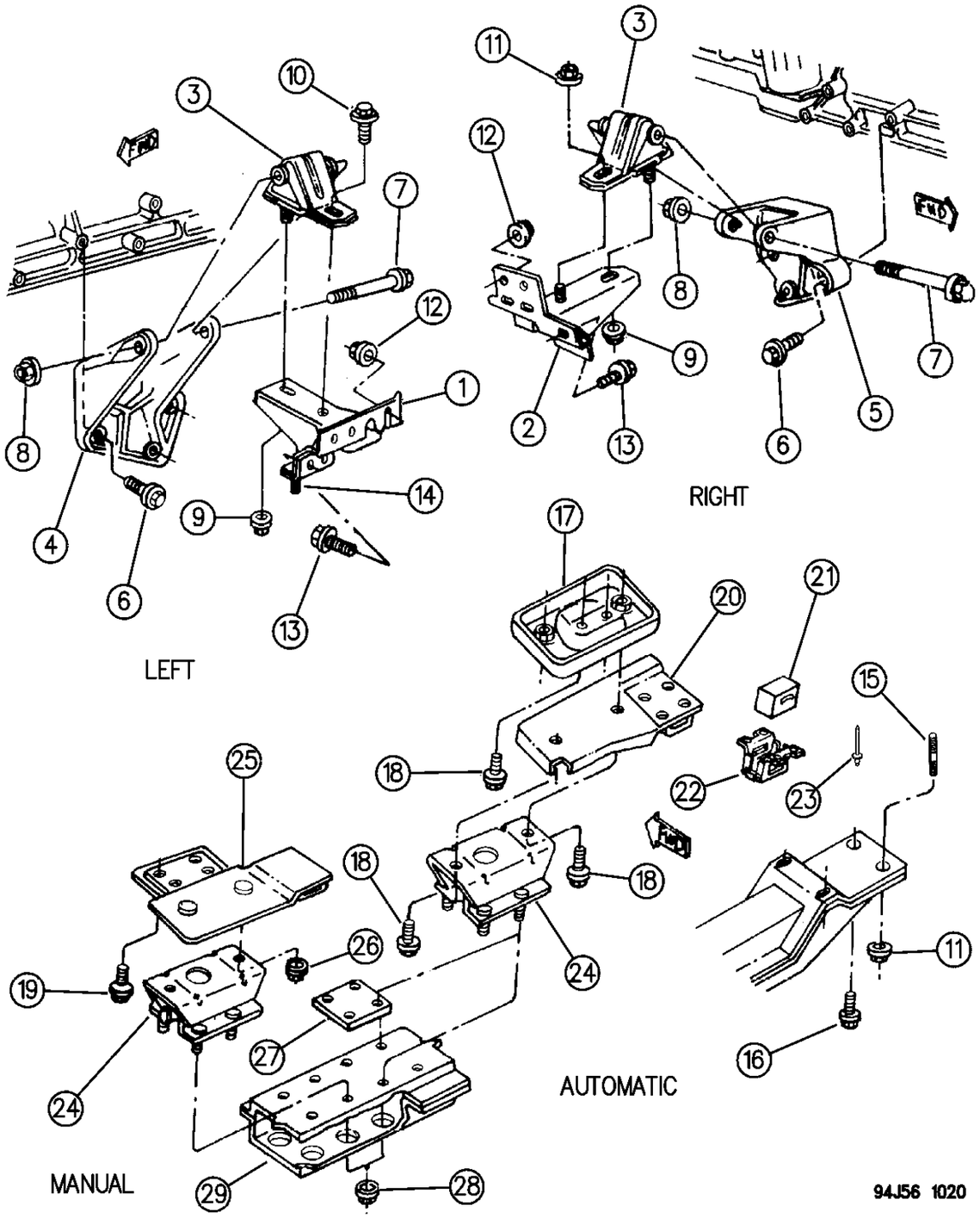

ITEM	PART NUMBER	QTY	BODY	MODEL	DESCRIPTION
28	1150 2811	4			NUT
29					CROSSMEMBER, Trans. Support
	5200 3929	1			Man. Trans.
	5200 2328	1			Auto Trans.

MODEL CODES:

72=2 DR Wagon	77=Open Body 93" Whlbase	T=2WD	U=4WD (RHD)
74=4 DR Wagon	78=Open Body 103" Whlbase - Export	J,N=4WD	

BODY STYLES:

YJ=Wrangler (4X4) "S"	XJ=Cherokee SE	ZJ=Grand Cherokee SE	Y1=Wrangler
Weangler (4X4) SE	Cherokee Sport	Grand Cherokee Laredo	X1=Cherokee
Wrangler (4X4) Sahara	Cherokee Country	Grand Cherolee Limited	Z1=Grand Cherokee
Wrangler (4X4) Renegade		ZG=Grand Cherokee European	KDX=Vehicles

AR = Use as Required - = Non Illustrated Part P.A.R. = Paint as Required

ENGINE MOUNTS 4.0L ENGINE ZJ BODY
Figure 9B-1030

9B-1030B

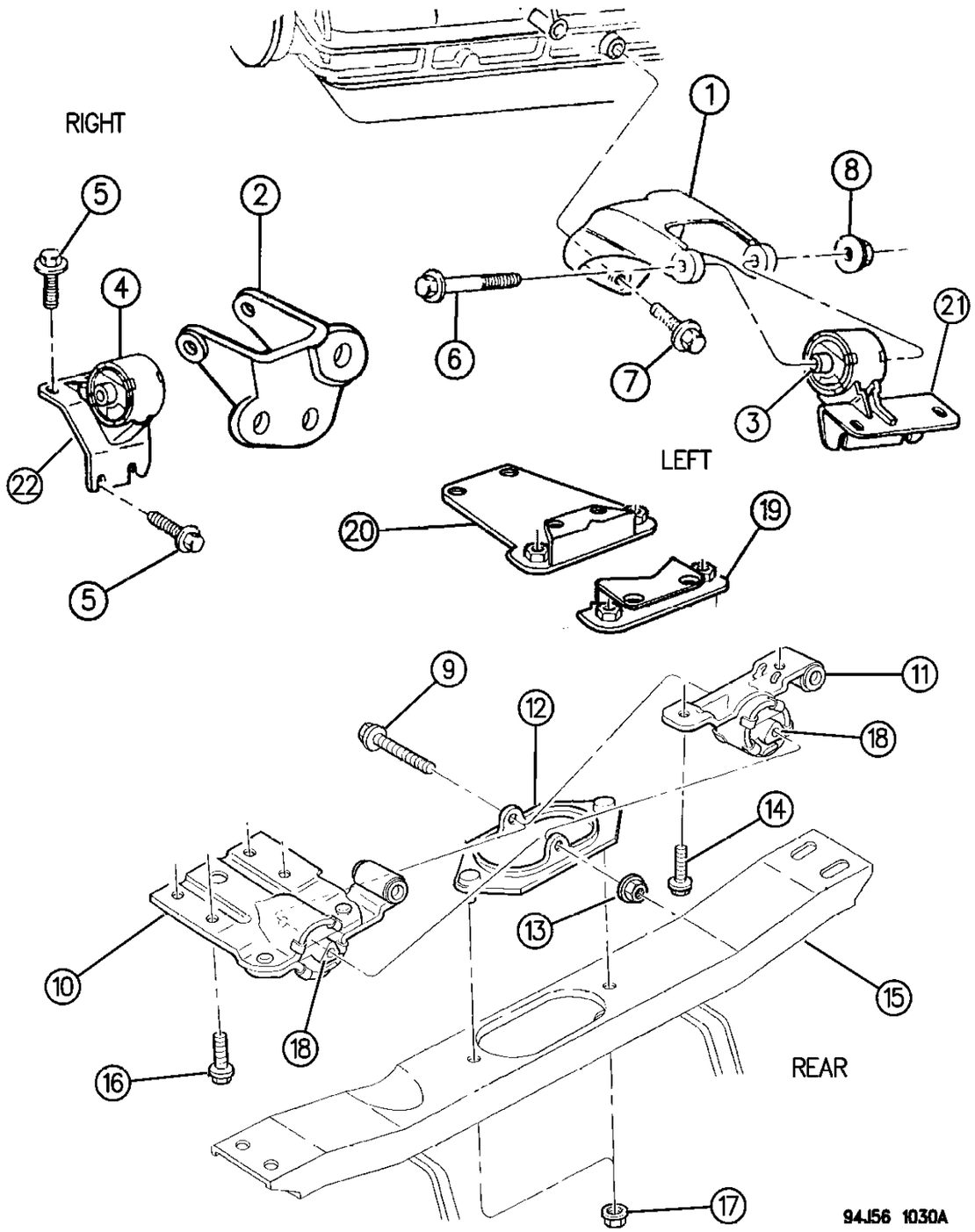

ITEM	PART NUMBER	QTY	BODY	MODEL	DESCRIPTION
1	5201 7829	1			BRACKET, Lt., Front Mount
2					BRACKET, Rt., Front Mount
	5201 7851	1			
	5305 4305	1		ZG	RHD
3					INSULATOR ASSEMBLY, Lt., Front Support ***
	5201 8281	1			1994-95
	5205 8503	1			1996
4					INSULATOR ASSEMBLY, Rt., Front Support ***
	5201 8280	1			1994-95
	5205 8502	1			1996
	5305 4300	1		ZG	RHD
5	6503 119	8			SCREW, w/Washer, (M10x1.5x40)
6	3420 2606	2			BOLT, Cushion to Engine Bracket
7	6034 989	2			BOLT, (.375-16x1.125)
8	6502 697	2			NUT
9	6502 809	1			BOLT, (M12x1.75x110)
10	5201 8096	1			BRACKET ASSEMBLY, Rear Engine Mount, Man. Trans. ***
11					BRACKET ASSEMBLY, Rear Engine Mount, Auto Trans. ***
	5205 8608	1			1994-95
	5205 8486	1			1996
12	5205 8225	1			BRACKET, Clevis Rear Engine Mount
13	6502 697	1			NUT, (M12x1.75)
14	3420 1964	2			BOLT
15					CROSSMEMBER, Transmission Support
	5205 8656	1			1994-95
	5205 8765	1			1996
16	6033 358	4			BOLT
17	6502 337	2			NUT, (M10x1.5)
18		1			CUSHION, (Serviced in Rear Mount Bracket)
19					ADAPTER, Trans. Support, 2WD, w/Auto Trans.
	5200 5353	1			1994-95
	5205 8783	1			1996
20					ADAPTER, Trans Support, 4WD, Auto. Trans.
	5201 7693	1			1994-95
	5201 9542	1			1996
21	5201 7850	1			BRACKET, Lt., Front Support
22	5201 7849	1			BRACKET, Rt., Front Support

MODEL CODES:

72=2 DR Wagon
74=4 DR Wagon
77=Open Body 93" Whlbase
78=Open Body 103" Whlbase - Export
T=2WD
J,N=4WD
U=4WD (RHD)

BODY STYLES:

YJ=Wrangler (4X4) "S"
Weangler (4X4) SE
Wrangler (4X4) Sahara
Wrangler (4X4) Renegade
XJ=Cherokee SE
Cherokee Sport
Cherokee Country
ZJ=Grand Cherokee SE
Grand Cherokee Laredo
Grand Cherolee Limited
ZG=Grand Cherokee European
Y1=Wrangler
X1=Cherokee
Z1=Grand Cherokee
KDX=Vehicles

AR = Use as Required - = Non Illustrated Part P.A.R. = Paint as Required

« RETURN TO GROUP INDEX

SAGIPARTS

GROUP-9C
5.2L ENGINE

9–100

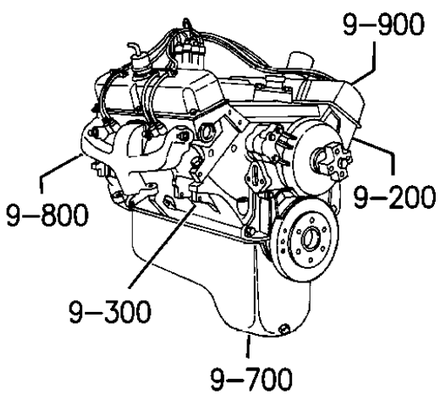

09A	(G) EDA = 2.5L ENGINE 4 CYL. (GAS) TBI
	(H) EPE = 2.5L ENGINE 4 CYL. (GAS) LEADED
	(P) EPE = 2.5L ENGINE 4 CYL. (GAS) UNLEADED
	(F) EPB = 2.5L ENGINE 4 CYL. (GAS) MPI
09B	(S) ERH UNLEADED = 4.0L ENGINE 6 CYL. (GAS) MPI
	(V) ERH LEADED = 4.0L ENGINE 6 CYL. (GAS) MPI
09C	(Y) ELF = 5.2L ENGINE 8 CYL. MPI
09D	(B) ENA = 2.1L ENGINE 4 CYL. DIESEL
09E	(M) ENC = 2.5L ENGINE 4 CYL. DIESEL

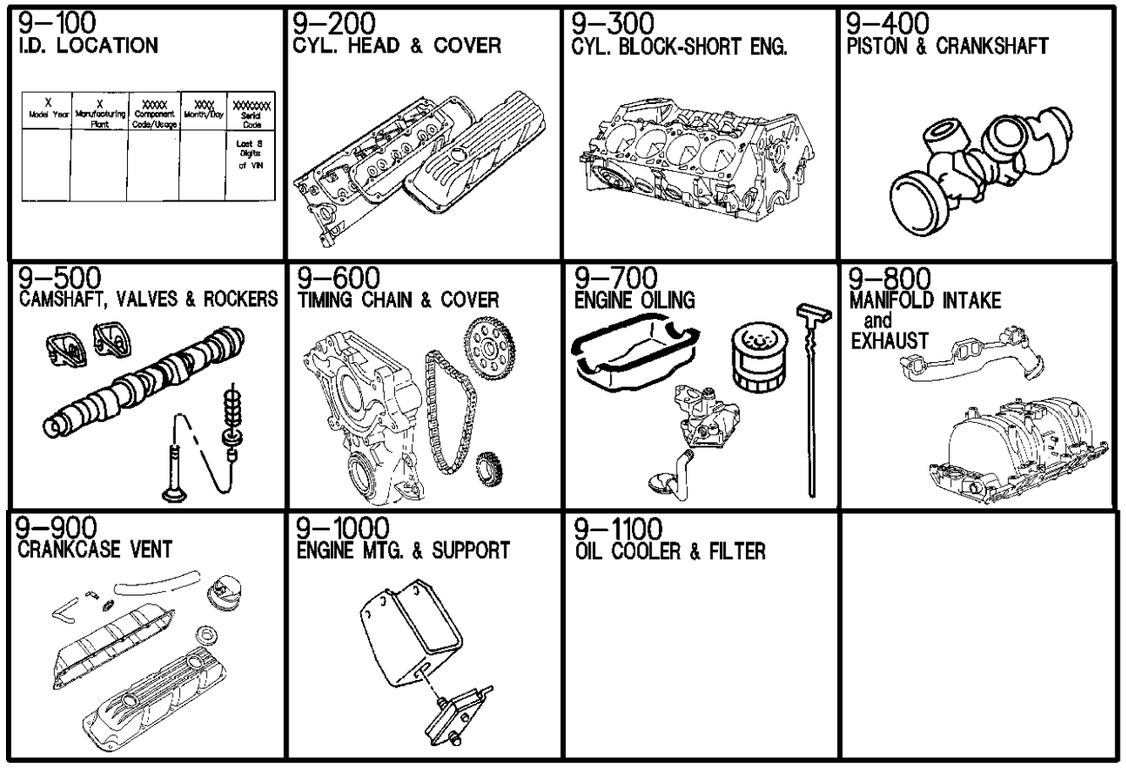

GROUP 9C - ENGINE, 8 CYLINDER

ILLUSTRATION TITLE	GROUP-FIG. NO.
CYLINDER HEAD	
CYLINDER HEAD 5.2L ENGINE	Fig. 9C-210
CYLINDER BLOCK	
CYLINDER BLOCK 5.2L ENGINE	Fig. 9C-310
CRANKSHAFT, PISTON, AND TORQUE CONVERTER	
CRANKSHAFT, PISTONS AND TORQUE CONVERTER 5.2L ENGINE	Fig. 9C-410
CAMSHAFT AND VALVES	
CAMSHAFT AND VALVES 5.2L ENGINE	Fig. 9C-510
TIMING COVER AND INDICATOR	
TIMING COVER AND INDICATOR 5.2L ENGINE	Fig. 9C-610
ENGINE OILING	
ENGINE OILING 5.2L ENGINE	Fig. 9C-710
MANIFOLDS	
MANIFOLD, INTAKE AND EXHAUST 5.2L ENGINE	Fig. 9C-810
CRANKCASE VENTILATION	
CRANKCASE VENTILATION 5.2L ENGINE	Fig. 9C-910
ENGINE MOUNTS	
ENGINE MOUNTS, FRONT 5.2L ENGINE	Fig. 9C-1010
ENGINE MOUNTS, REAR 5.2L ENGINE	Fig. 9C-1020

CYLINDER HEAD 5.2L ENGINE
Figure 9C-210

9C-210

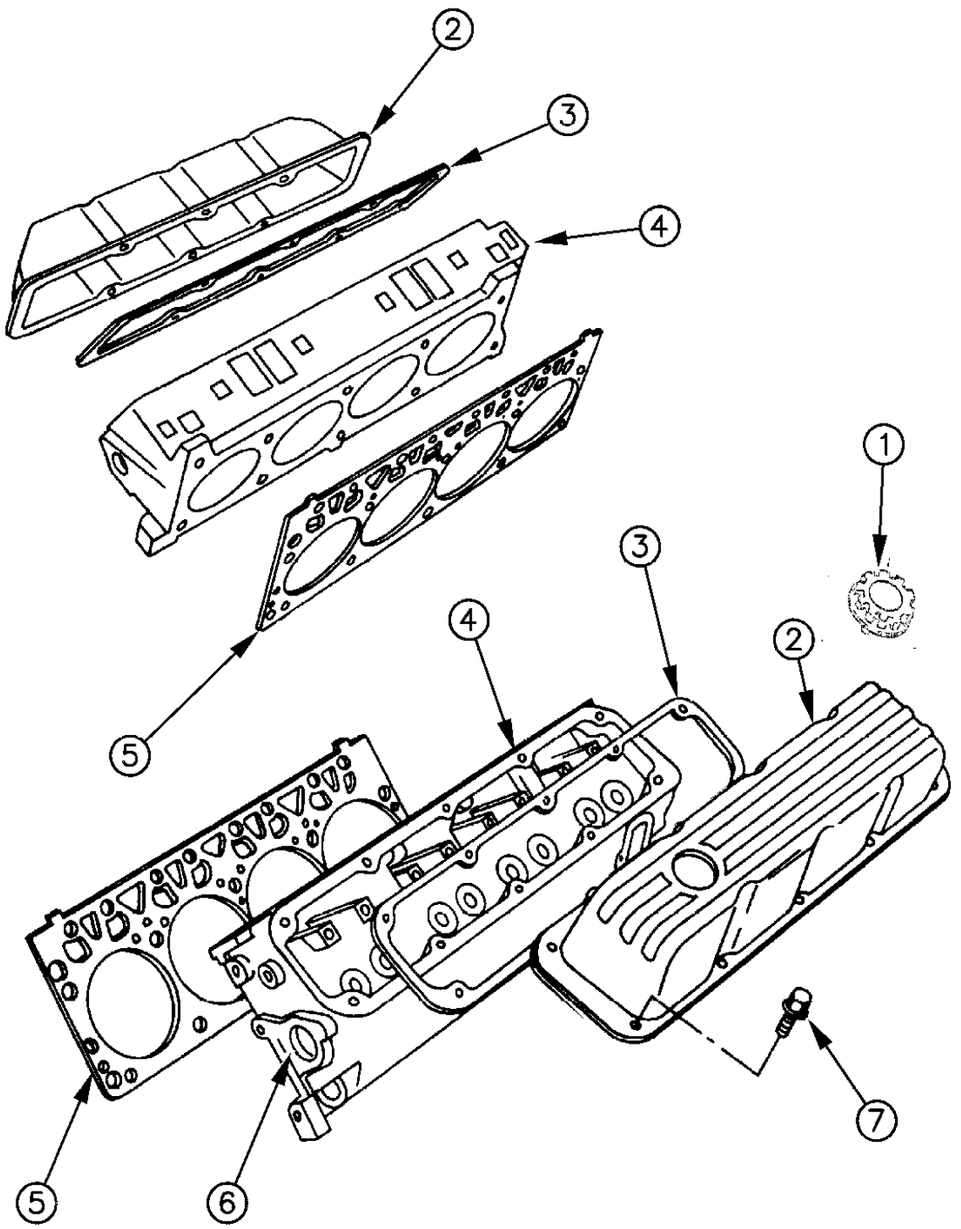

94J09 210

ITEM	PART NUMBER	QTY	BODY	MODEL	DESCRIPTION
NOTE: Packages Do Not Contain Gaskets For All Required Sealing. R.T.V. Sealer And Gasket Eliminator Must Also Be Used.					
	4741 963	1			GASKET PACKAGE, Engine Upper ***
1	5302 0554	1			CAP, Oil Filler
2					COVER, Cylinder Head
	5302 0612	AR			w/o Oil Filler Hole
	5302 0340	AR			w/Oil Filler Hole
3	5300 6695				GASKET, Cylinder Head Cover
4	5300 6673	2			HEAD, Cylinder, Partial
					BOLT, Cylinder Head
	6034 691	10			(.50x4.625)
	6034 690	10			(.50-13x2.00)
5	5302 0490	2			GASKET, Cylinder Head
6	4556 020	AR			PLUG, Core Hole, (1.25)
7					SCREW/STUD, Cover ***
	6034 326	10			STUD, (.25-20x1.810)
	6034 400	10			SCREW, (.25-20x75)
8	5302 0419	8			HEAT SHIELD, Spark Plug Wire ***

MODEL CODES:

72=2 DR Wagon
74=4 DR Wagon
77=Open Body 93" Whlbase
78=Open Body 103" Whlbase - Export
T=2WD
J,N=4WD
U=4WD (RHD)

BODY STYLES:

YJ=Wrangler (4X4) "S"
Weangler (4X4) SE
Wrangler (4X4) Sahara
Wrangler (4X4) Renegade
XJ=Cherokee SE
Cherokee Sport
Cherokee Country
ZJ=Grand Cherokee SE
Grand Cherokee Laredo
Grand Cherolee Limited
ZG=Grand Cherokee European
Y1=Wrangler
X1=Cherokee
Z1=Grand Cherokee
KDX=Vehicles

AR = Use as Required - = Non Illustrated Part P.A.R. = Paint as Required

CYLINDER BLOCK 5.2L ENGINE
Figure 9C-310

9C-310

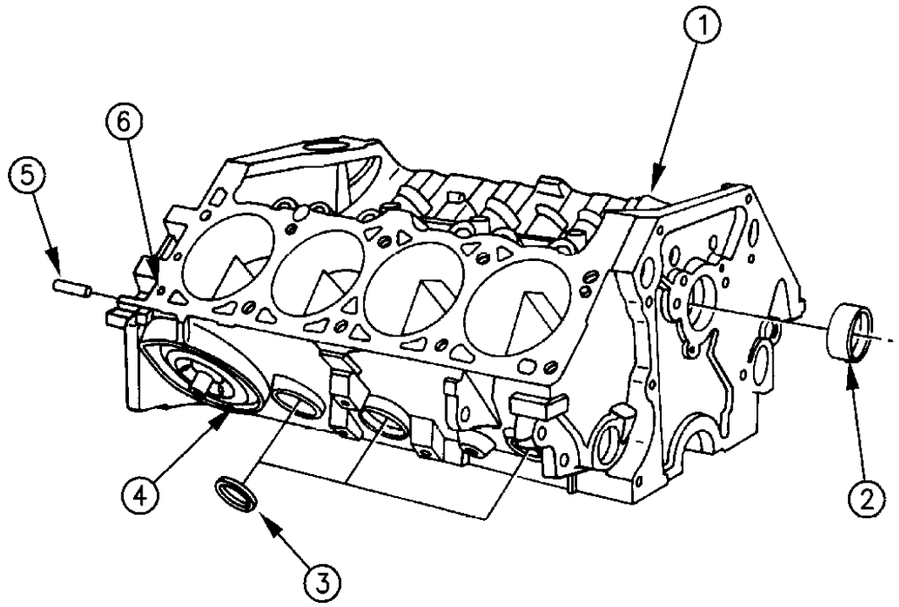

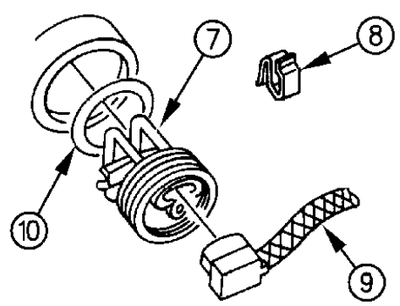

94J09 310

ITEM	PART NUMBER	QTY	BODY	MODEL	DESCRIPTION
NOTE: Packages Do Not Contain Gaskets For All Required Sealing. R.T.V. Sealer And Gasket Eliminator Must Also Be Used.					
	4720 740	1			GASKET PACKAGE, Engine Lower ***
1	4713 602	1			ENGINE, Short, (Contains Pistons, Rings, Crankshaft, Conecting Rods, and Bearings)
2	3830 603	1			BEARING, Camshaft #1
3					PLUG, Core Hole
	4556 022	7			(1.625)
	4556 020	1			(1.250)
4					PLUG
	5300 9518	1			Oil Line
	3751 818	1			Oil Hole, Right
	4315 769	1			Oil Hole, Left, w/Orifice
		4			Oil Hole, (3/8 NPT), (Not Serviced)
5	1122 532	2			DOWEL, Cylinder Block to Clutch/Torque Converter Housing
6	0141 215	4			DOWEL, Cylinder Block to Head
7	4740 197	1			HEATER PACKAGE, Engine Block ***
8		AR			CLIP, Heater Cord, (Not Serviced)
9	5602 7117	1			CORD, Heater
10					SEAL, Heater
	4494 471	AR			(1-11/32 Dia.x11/64 Width)
	6501 446	AR			(1-11/32 Dia.x9/64 Width)

MODEL CODES:

72=2 DR Wagon
74=4 DR Wagon
77=Open Body 93" Whlbase
78=Open Body 103" Whlbase - Export
T=2WD
J,N=4WD
U=4WD (RHD)

BODY STYLES:

YJ=Wrangler (4X4) "S"
Weangler (4X4) SE
Wrangler (4X4) Sahara
Wrangler (4X4) Renegade
XJ=Cherokee SE
Cherokee Sport
Cherokee Country
ZJ=Grand Cherokee SE
Grand Cherokee Laredo
Grand Cherolee Limited
ZG=Grand Cherokee European
Y1=Wrangler
X1=Cherokee
Z1=Grand Cherokee
KDX=Vehicles

AR = Use as Required - = Non Illustrated Part P.A.R. = Paint as Required

« RETURN TO GROUP INDEX

CRANKSHAFT, PISTONS AND TORQUE CONVERTER 5.2L ENGINE
Figure 9C-410

9C-410A

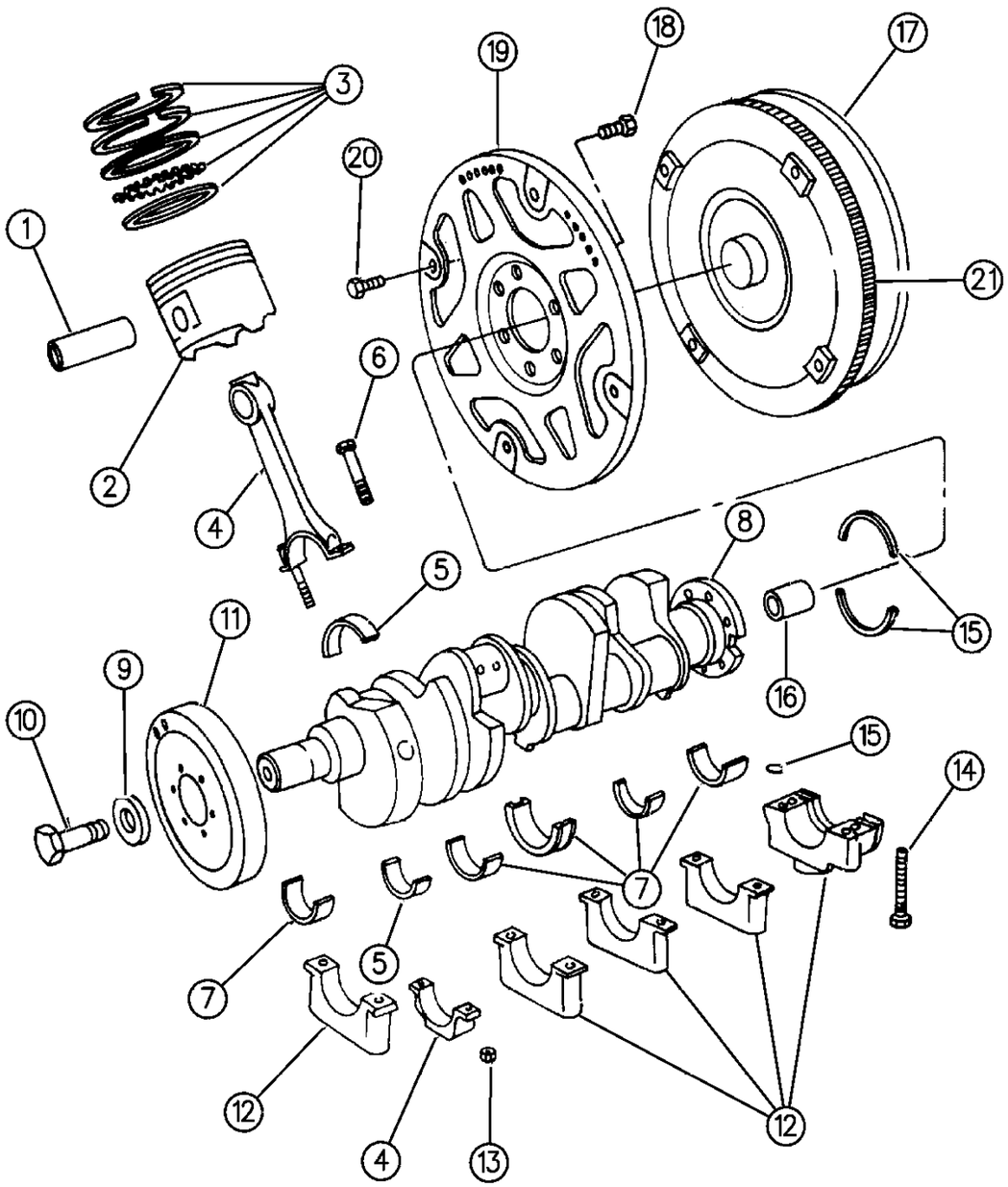

94J09 410

ITEM	PART NUMBER	QTY	BODY	MODEL	DESCRIPTION
1		8			PIN, Piston, (Serviced in Piston Assy)
2					PISTON ASSEMBLY, w/Pin and Rod ***
					#1,3,5,7
	4778 855	4			"B" Size, 3.90925
	4778 857	4			"C" Size, 3.90975
	4778 859	4			"D" Size, 3.91025
					#2,4,6,8
	4778 856	4			"B" Size, 3.90925
	4778 858	4			"C" Size, 3.90975
	4778 860	4			"D" Size, 3.91025
3	4720 727	1			RING SET, Engine, Standard
4		8			ROD, Connecting, (Serviced in Piston Assy)
5					BEARING, Connecting Rod
	2421 305	8			Standard
	2421 306	8			.001 U/S
	2421 309	8			.010 U/S
6	6033 715	16			BOLT, Connecting Rod Bearing Cap
7					BEARING, Crankshaft
					#1
	4397 776	1			Standard
	4397 780	1			.001 U/S
	4397 792	1			.010 U/S
					#2,4
	4397 777	2			Standard
	4397 781	2			.001 U/S
	4397 793	2			.010 U/S
					#3
	4720 595	1			Standard
	4720 596	1			.001 U/S
	4720 593	1			.010 U/S
					#5
	4397 701	1			Standard
	4397 702	1			.001 U/S
	4397 705	1			.010 U/S
8	5302 0603	1			CRANKSHAFT
9	1855 561	1			WASHER, Crankshaft Screw
10	1821 414	1			SCREW, Crankshaft, (3/4-14x2.25)
11	5302 0229	1			DAMPER, Vibration
12					CAP, Crankshaft Bearing, (Serviced in Block)
13	6032 296	8			NUT, Connecting Rod Bearing Cap Bolt
14					SCREW, Crankshaft Bearing Cap
	6027 264	8			#1,2,3

MODEL CODES:

72=2 DR Wagon
74=4 DR Wagon
77=Open Body 93" Whlbase
78=Open Body 103" Whlbase - Export
T=2WD
J,N=4WD
U=4WD (RHD)

BODY STYLES:

YJ=Wrangler (4X4) "S"
Weangler (4X4) SE
Wrangler (4X4) Sahara
Wrangler (4X4) Renegade
XJ=Cherokee SE
Cherokee Sport
Cherokee Country
ZJ=Grand Cherokee SE
Grand Cherokee Laredo
Grand Cherolee Limited
ZG=Grand Cherokee European
Y1=Wrangler
X1=Cherokee
Z1=Grand Cherokee
KDX=Vehicles

AR = Use as Required - = Non Illustrated Part P.A.R. = Paint as Required

CRANKSHAFT, PISTONS AND TORQUE CONVERTER 5.2L ENGINE
Figure 9C-410

9C-410A

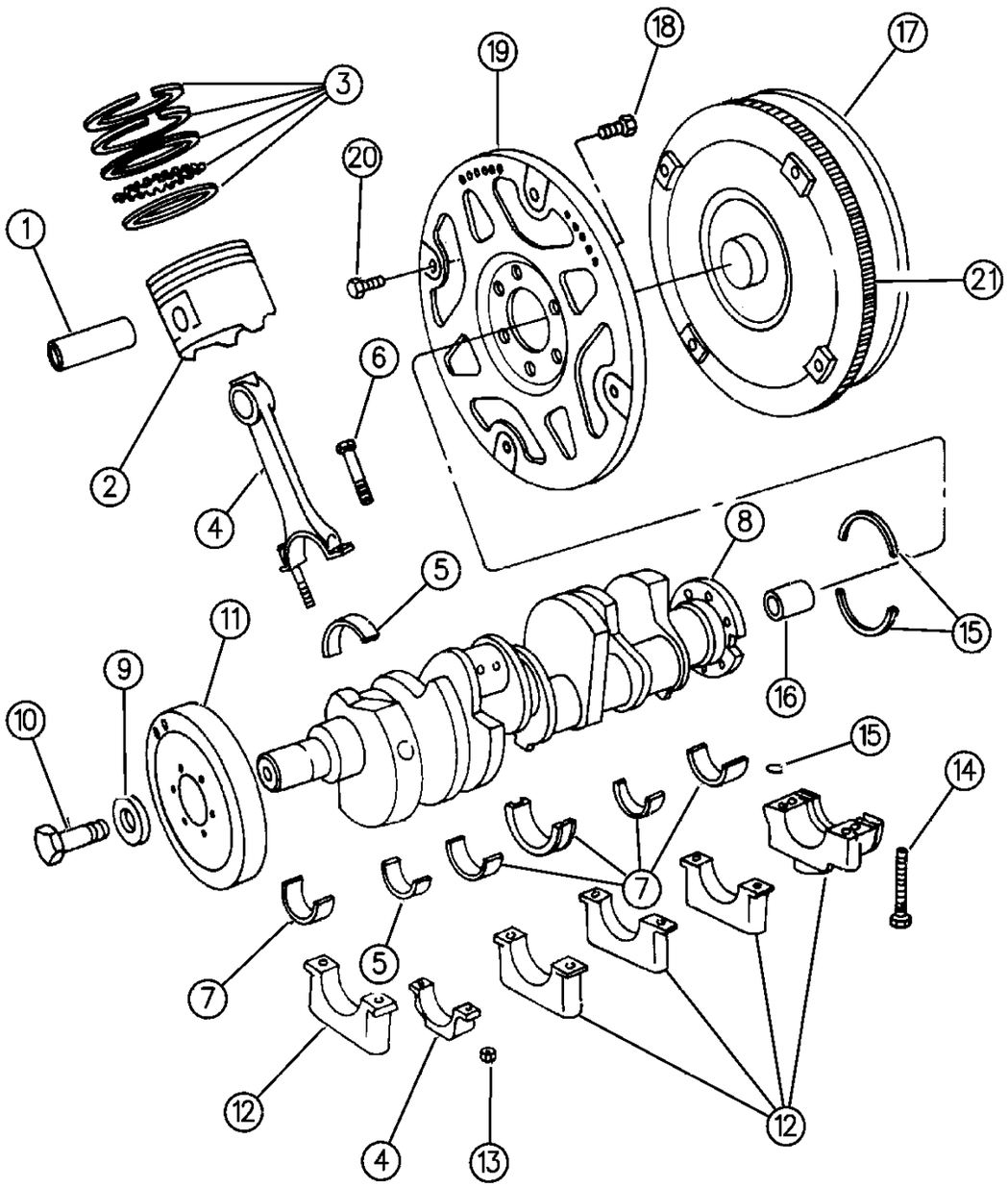

94J09 410

ITEM	PART NUMBER	QTY	BODY	MODEL	DESCRIPTION
	6033 300	2			#4
15	4778 228	1			OIL SEAL, Crankshaft
16					BEARING, Pilot
	5300 9180	1			Sleeve, w/Bearing
	5300 9181	1			Bearing
17					CONVERTER, Torque
	5211 7879	1			1994-95
	5211 9792	1			1996
18	1949 424	6			SCREW, Drive Plate to Crankshaft
19					PLATE, Torque Converter Drive
	5300 8669	1			1994-95
	5211 8255	1			1996
20	J321 4097	4			SCREW, Torque Converter to Drive Plate
21	3515 203	1			GEAR, Torque Converter Starter Ring

MODEL CODES:

72=2 DR Wagon
74=4 DR Wagon
77=Open Body 93" Whlbase
78=Open Body 103" Whlbase - Export
T=2WD
J,N=4WD
U=4WD (RHD)

BODY STYLES:

YJ=Wrangler (4X4) "S"
Weangler (4X4) SE
Wrangler (4X4) Sahara
Wrangler (4X4) Renegade
XJ=Cherokee SE
Cherokee Sport
Cherokee Country
ZJ=Grand Cherokee SE
Grand Cherokee Laredo
Grand Cherolee Limited
ZG=Grand Cherokee European
Y1=Wrangler
X1=Cherokee
Z1=Grand Cherokee
KDX=Vehicles

AR = Use as Required - = Non Illustrated Part P.A.R. = Paint as Required

CAMSHAFT AND VALVES 5.2L ENGINE
Figure 9C-510

9C-510

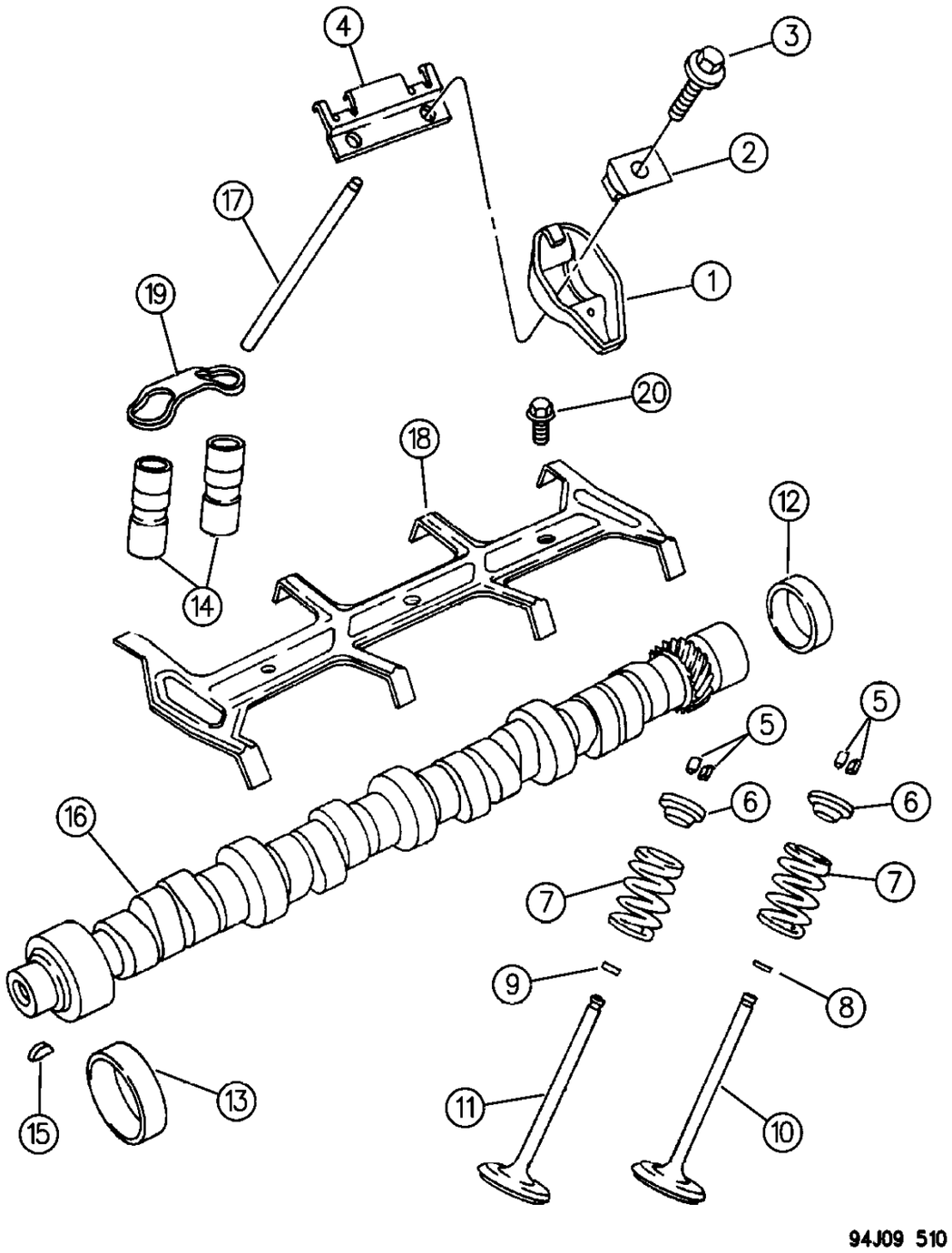

ITEM	PART NUMBER	QTY	BODY	MODEL	DESCRIPTION
1	5300 8282	16			ROCKER, Valve
2	5300 8283	16			PIVOT, Rocker Arm
3	6034 184	16			BOLT, Rocker Arm Pivot
4	5300 8633	8			RETAINER, Rocker Arm/Push Rod
5	3300 3521	32			LOCK, Valve Spring Retainer
6	3300 4626	16			RETAINER, Valve Spring
7	5302 1056	16			SPRING, Valve
8					SEAL, Intake Valve Stem
	5300 9886	8			Standard
	5300 9886	8			.003 O/S
	3300 3016	8			.015 O/S
9					SEAL, Exhaust Valve
	5300 9887	8			Standard
	5300 9887	8			.003 O/S
	3300 2733	8			.015 o/s
10					VALVE, Intake
	5300 6723	8			Standard
	5300 9287	8			.003 O/S
	5300 9285	8			.015 O/S
11					VALVE, Exhaust
	5300 6724	8			Standard
	5300 9291	8			.003 O/S
	5300 9289	8			.015 O/S
12	2863 071	1			PLUG, Camshaft Rear Bearing
13					BEARING, Camshaft
	3830 603	1			#1
	4179 776	1			#2
	4179 777	1			#3
	4179 778	1			#4
	1632 526	1			#5
14	4713 439	16			TAPPET, Valve
15	0431 787	1			KEY, Camshaft Sprocket
16					CAMSHAFT
	5300 6707	1			1994
	5302 0283	1			1995-96
17	5300 6722	16			PUSH ROD, Valve
18	4323 207	1			RETAINER, Tappet Aligning Yoke
19	4483 045	8			YOKE, Tappet Aligning
20	6034 483	2			SCREW, w/Washer, Yoke Retainer, (5/16-18x.81)

MODEL CODES:

72=2 DR Wagon
74=4 DR Wagon
77=Open Body 93" Whlbase
78=Open Body 103" Whlbase - Export
T=2WD
J,N=4WD
U=4WD (RHD)

BODY STYLES:

YJ=Wrangler (4X4) "S"
Weangler (4X4) SE
Wrangler (4X4) Sahara
Wrangler (4X4) Renegade
XJ=Cherokee SE
Cherokee Sport
Cherokee Country
ZJ=Grand Cherokee SE
Grand Cherokee Laredo
Grand Cherolee Limited
ZG=Grand Cherokee European
Y1=Wrangler
X1=Cherokee
Z1=Grand Cherokee
KDX=Vehicles

AR = Use as Required - = Non Illustrated Part P.A.R. = Paint as Required

« RETURN TO GROUP INDEX

TIMING COVER AND INDICATOR 5.2L ENGINE
Figure 9C-610

9C-610B

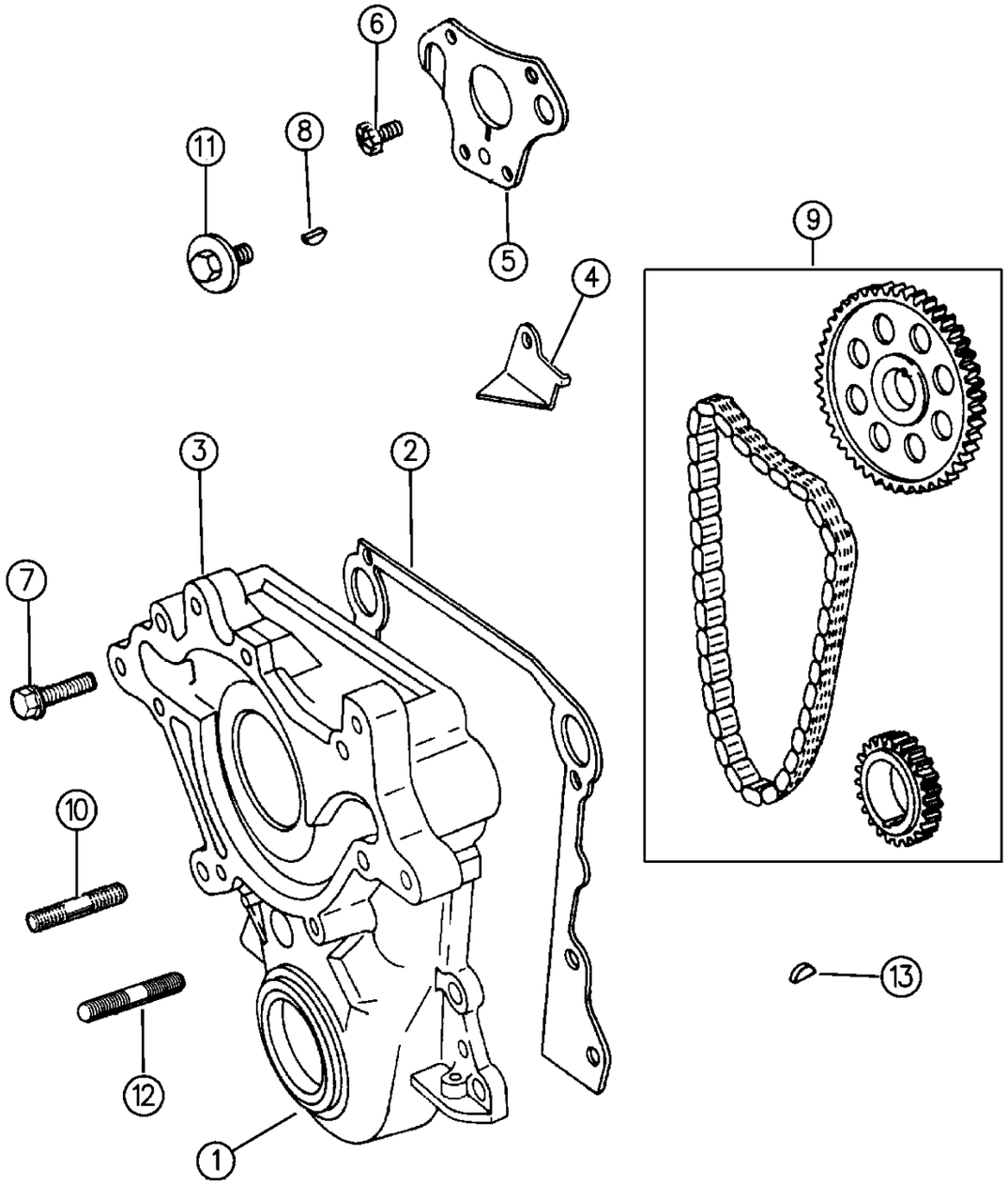

ITEM	PART NUMBER	QTY	BODY	MODEL	DESCRIPTION
1	4741 908	1			SEAL, Crankshaft Front Oil
2	5302 0284	1			GASKET, Chain Case Cover
3	4798 242	1			COVER, Chain Case
4	3671 649	1			TAB, Timing Chain Oil
5	4315 764	1			PLATE, Camshaft Sprocket Thrust
6	0191 674	3			SCREW, Camshaft Sprocket Thrust Plate
7	6034 479	1			BOLT, Chain Case Cover, (.375-16x2.25)
8	6029 411	1			KEY, Camshaft Sprocket
9	8350 7095	1			CHAIN PACKAGE, Timing, (Includes Cam and Crankshaft Sprockets) ***
10	6034 452	1			STUD, Double End, (.375-16x.375-16x2.38)
11	6034 321	1			SCREW, w/Washer, Camshaft Sprocket Retainer
12	6034 453	2			STUD, Double End, (.375-16x.375-16x1.63)
13	6029 411	1			KEY, Crankshaft Sprocket

MODEL CODES:

72=2 DR Wagon
74=4 DR Wagon
77=Open Body 93" Whlbase
78=Open Body 103" Whlbase - Export
T=2WD
J,N=4WD
U=4WD (RHD)

BODY STYLES:

YJ=Wrangler (4X4) "S"
Weangler (4X4) SE
Wrangler (4X4) Sahara
Wrangler (4X4) Renegade

XJ=Cherokee SE
Cherokee Sport
Cherokee Country

ZJ=Grand Cherokee SE
Grand Cherokee Laredo
Grand Cherolee Limited
ZG=Grand Cherokee European

Y1=Wrangler
X1=Cherokee
Z1=Grand Cherokee
KDX=Vehicles

AR = Use as Required - = Non Illustrated Part P.A.R. = Paint as Required

« RETURN TO GROUP INDEX

ENGINE OILING 5.2L ENGINE
Figure 9C-710

9C-710

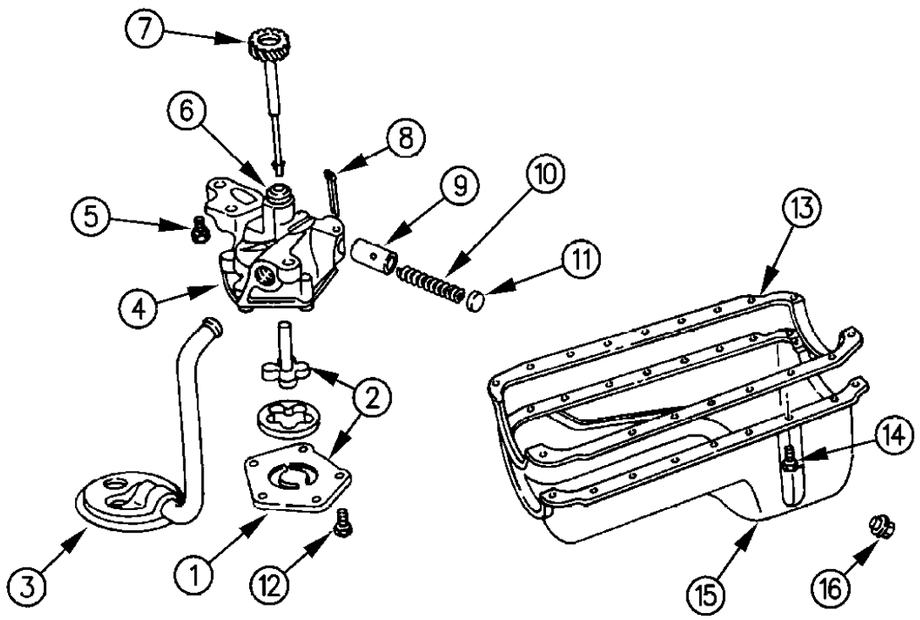

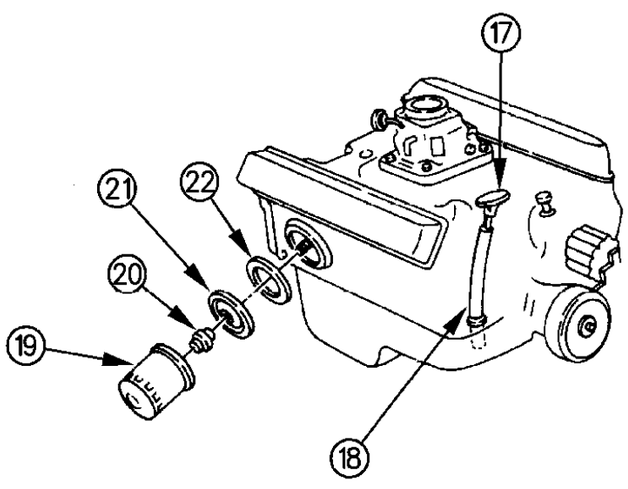

ITEM	PART NUMBER	QTY	BODY	MODEL	DESCRIPTION
1	4071 043	1			COVER, Oil Pump
2	3837 648	1			SHAFT and ROTOR PACKAGE, Oil Pump ***
3	5302 0462	1			TUBE, Strainer and Oil Pick-Up
4	5300 9295	1			PUMP ASSEMBLY, Oil ***
5	0179 842	2			SCREW, Oil Pump, (3/8x1.375)
6	1737 725	1			BUSHING, Oil Pump and Distributor Drive Shaft
7	5302 0546	1			SHAFT ASSEMBLY, Oil Pump and Distributor Drive Gear ***
8	0108 636	1			PIN, Oil Pressure Relief Valve
9	2843 208	1			PLUNGER, Oil Pressure Relief Valve
10	2402 473	1			SPRING, Oil Pressure Relief Valve
11	2806 273	1			CAP, Oil Pressure Relief Valve
12	0220 480	5			SCREW, Oil Pump Cover, (.25-20x.75)
13	5300 5650	1			GASKET, Oil Pan
14					SCREW/STUD, w/Washer, Oil Pan ***
	6034 483	AR			Screw
	6034 733	AR			Stud, (5/16-18x1/4-20)
15					PAN, Oil
	5302 0289	1			Up To, 8-1-94
	5302 0913	1			After, 8-1-94
16	6035 417	1			PLUG, w/Gasket, Oil Pan Drain
17	5302 0447	1			INDICATOR, Oil Level
18	5300 9121	1			TUBE, Oil Level Indicator
19	5281 090	1			FILTER, Oil
20	5300 7563	1			ADAPTER, Oil Filter to Cylinder Block
21	5300 9219	1			PLATE, Oil Filter Adapter
22	5302 0461	1			GASKET, Oil Filter Adapter Plate

MODEL CODES:

72=2 DR Wagon
74=4 DR Wagon
77=Open Body 93" Whlbase
78=Open Body 103" Whlbase - Export
T=2WD
J,N=4WD
U=4WD (RHD)

BODY STYLES:

YJ=Wrangler (4X4) "S"
Weangler (4X4) SE
Wrangler (4X4) Sahara
Wrangler (4X4) Renegade
XJ=Cherokee SE
Cherokee Sport
Cherokee Country
ZJ=Grand Cherokee SE
Grand Cherokee Laredo
Grand Cherolee Limited
ZG=Grand Cherokee European
Y1=Wrangler
X1=Cherokee
Z1=Grand Cherokee
KDX=Vehicles

94J09 710

AR = Use as Required - = Non Illustrated Part P.A.R. = Paint as Required

« RETURN TO GROUP INDEX

MANIFOLD, INTAKE AND EXHAUST 5.2L ENGINE
Figure 9C-810

9C-810B

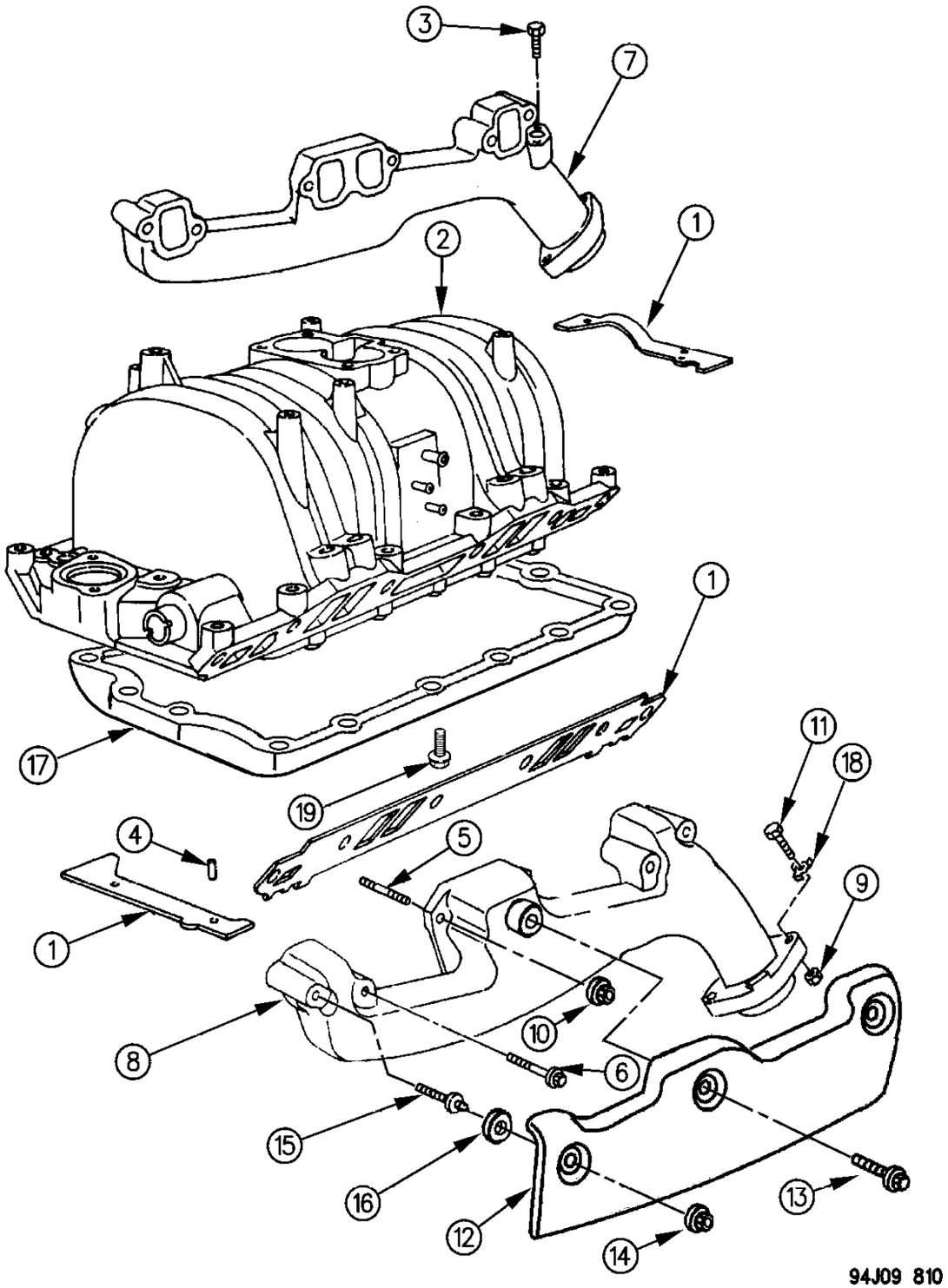

ITEM	PART NUMBER	QTY	BODY	MODEL	DESCRIPTION
NOTE: Packages Do Not Contain Gaskets For All Required Sealing. R.T.V. Sealer And Gasket Eliminator Must Also Be Used.					
1	4638 114	1			GASKET PACKAGE, Intake Manifold ***
2		1			MANIFOLD ASSEMBLY, Intake ***
	4762 375				With EGR Hole
	4883 318				Without EGR Hole
3	6034 305	12			SCREW, w/Washer, Intake Manifold, (5/16-18x2.75)
4	4006 583	4			DOWEL, Intake Manifold Gasket
5	6034 643	4			STUD, Exhaust Manifold
6	6034 806	6			SCREW, Exhaust Manifold, (5/16-18x3.10)
7					MANIFOLD, Rt., Exhaust
	5300 9378	1			1994-95
	5303 0869	1			1996
8	5300 9379	1			MANIFOLD, Exhaust Left
9	0118 615	4			NUT, Exhaust Pipe Flange Bolt
10	0115 729	4			NUT, Manifold Stud
11	0181 127	4			BOLT, Flanged
12					SHIELD, Exhaust Manifold Heat
	5301 0260	1			Right
	5301 0151	1			Left
13		2			SCREW, w/Washer, (.312-18x.875), (Not Serviced)
14		4			NUT, w/Washer, (.312-24), (Not Serviced)
15	6035 184	6			STUD, w/Washer, Manifold, (.312-18/.312-24x4.0)
16	5301 0091	4			WASHER, Flat, (.96x.145)
17	5300 6617	1			PAN Intake Manifold
	5300 6623	1			GASKET, Manifold Pan
18	4004 001	4			RETAINER, Exhaust Pipe Bolt
19	6034 583	AR			SCREW, w/Washer, Plenum Pan, (.250-20x.892)

MODEL CODES:

72=2 DR Wagon
74=4 DR Wagon
77=Open Body 93" Whlbase
78=Open Body 103" Whlbase - Export
T=2WD
J,N=4WD
U=4WD (RHD)

BODY STYLES:

YJ=Wrangler (4X4) "S"
Weangler (4X4) SE
Wrangler (4X4) Sahara
Wrangler (4X4) Renegade
XJ=Cherokee SE
Cherokee Sport
Cherokee Country
ZJ=Grand Cherokee SE
Grand Cherokee Laredo
Grand Cherolee Limited
ZG=Grand Cherokee European
Y1=Wrangler
X1=Cherokee
Z1=Grand Cherokee
KDX=Vehicles

AR = Use as Required - = Non Illustrated Part P.A.R. = Paint as Required

« RETURN TO GROUP INDEX

CRANKCASE VENTILATION 5.2L ENGINE
Figure 9C-910

9C-910A

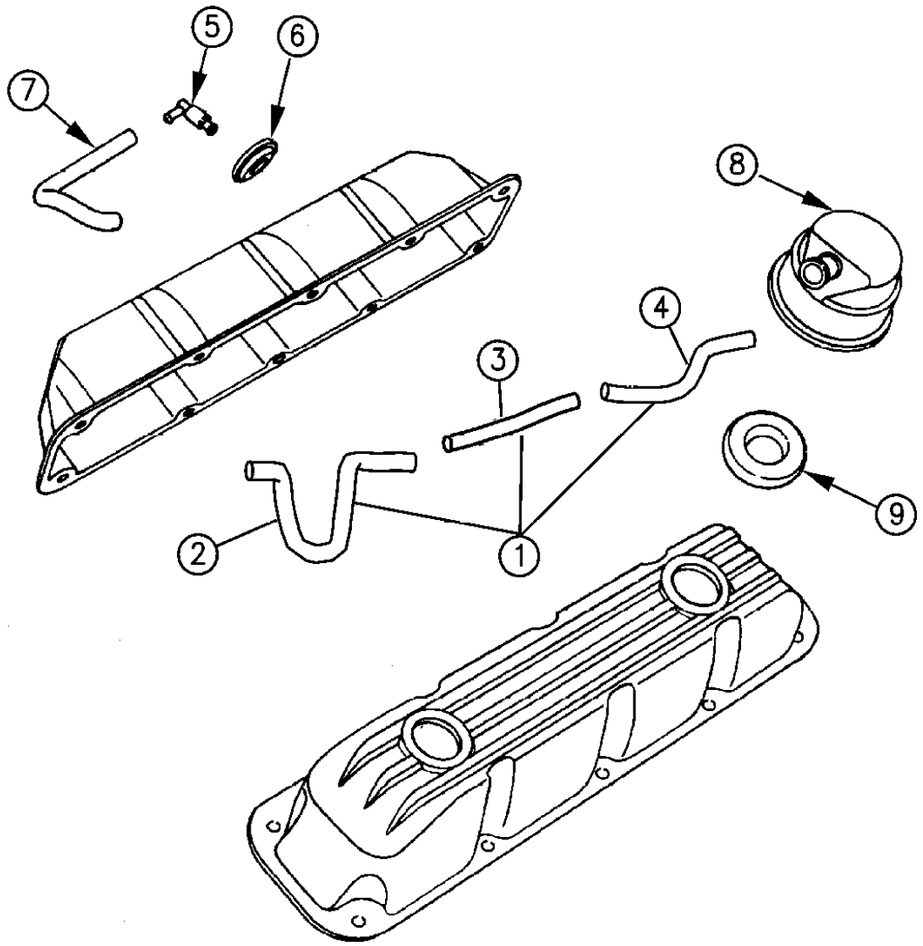

94J09 910

ITEM	PART NUMBER	QTY	BODY	MODEL	DESCRIPTION
1	5303 0341				HOSE ASSEMBLY, Crankcase Vent Inlet ***
2	5303 0409	1			TUBE, Rubber Formed
3	5303 0410	1			TUBE, Nylon, Straight
4	5303 0411	1			TUBE, Rubber Formed
5	5303 0564	1			VALVE, Crankcase Vent
6	5303 0017	1			GROMMET, PCV Valve
7	5300 8675	1			TUBE ASSEMBLY, PCV Valve ***
8	5303 0254	1			FILTER, Crankcase Vent Inlet Air
9	2946 079	1			GROMMET, Crankcase Vent Inlet Air Cleaner

MODEL CODES:

72=2 DR Wagon
74=4 DR Wagon
77=Open Body 93" Whlbase
78=Open Body 103" Whlbase - Export
T=2WD
J,N=4WD
U=4WD (RHD)

BODY STYLES:

YJ=Wrangler (4X4) "S"
Weangler (4X4) SE
Wrangler (4X4) Sahara
Wrangler (4X4) Renegade
XJ=Cherokee SE
Cherokee Sport
Cherokee Country
ZJ=Grand Cherokee SE
Grand Cherokee Laredo
Grand Cherolee Limited
ZG=Grand Cherokee European
Y1=Wrangler
X1=Cherokee
Z1=Grand Cherokee
KDX=Vehicles

AR = Use as Required - = Non Illustrated Part P.A.R. = Paint as Required

« RETURN TO GROUP INDEX

ENGINE MOUNTS, FRONT 5.2L ENGINE
Figure 9C-1010

9C-1010A

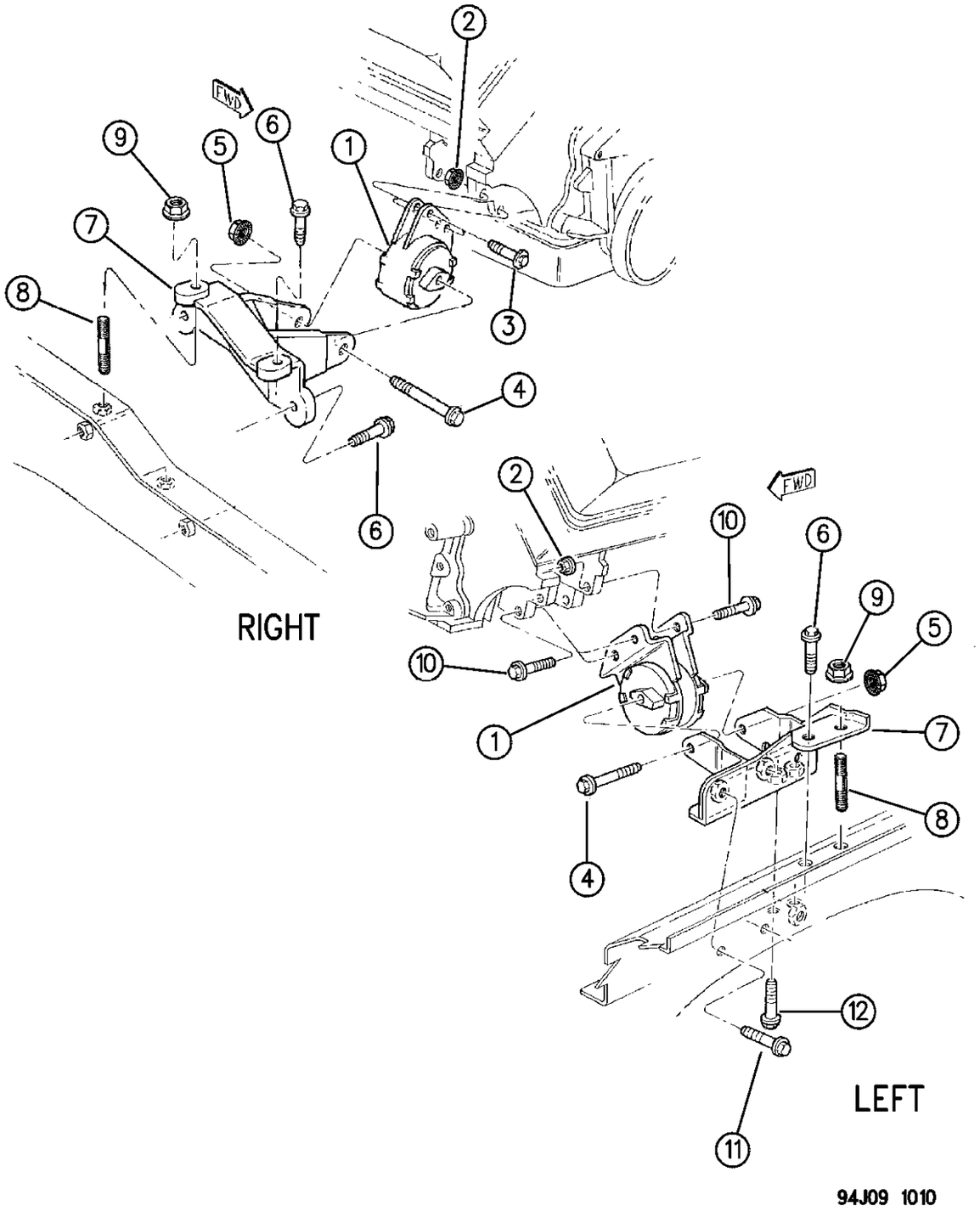

ITEM	PART NUMBER	QTY	BODY	MODEL	DESCRIPTION
1					INSULATOR ASSEMBLY, Support Front ***
					1994-95
	5205 8500	1			Rt.
	5205 8501	1			Lt.
					1996
	5205 8504	1			Rt.
	5205 8505	1			Lt.
2		AR			NUT, w/Washer, (7/16x14), (Not Serviced)
3	6030 754	2			BOLT, w/Washer, Insulator to Block, (7/16-14x1.875)
4	3420 2606	2			BOLT, Sill Bracket to Insulator
5	6502 697	2			NUT, Sill Bracket to Insulator
6	6503 119	4			SCREW, w/Washer, Bracket to Sill, (M10-1.5x40)
7					BRACKET, Front Sill
	5205 8014	1			Rt.
	5205 8009	1			Lt.
8					STUD, Bracket to Sill
	6503 153	1			Rt.
	6503 152	1			Lt.
9	6101 448	2			NUT, w/Washer, Bracket to Sill
10	6030 713	3			BOLT, W/Washer, Insulator to Block, (7/16-14x1.625)
11	6502 560	2			BOLT, Bracket to Sill, (M12-1.75x95)
12	6502 557	2			BOLT, Bracket to Sill, (M12-1.75x40)

MODEL CODES:

72=2 DR Wagon
74=4 DR Wagon
77=Open Body 93" Whlbase
78=Open Body 103" Whlbase - Export
T=2WD
J,N=4WD
U=4WD (RHD)

BODY STYLES:

YJ=Wrangler (4X4) "S"
Weangler (4X4) SE
Wrangler (4X4) Sahara
Wrangler (4X4) Renegade
XJ=Cherokee SE
Cherokee Sport
Cherokee Country
ZJ=Grand Cherokee SE
Grand Cherokee Laredo
Grand Cherolee Limited
ZG=Grand Cherokee European
Y1=Wrangler
X1=Cherokee
Z1=Grand Cherokee
KDX=Vehicles

AR = Use as Required - = Non Illustrated Part P.A.R. = Paint as Required

« RETURN TO GROUP INDEX

ENGINE MOUNTS, REAR 5.2L ENGINE
Figure 9C-1020

9C-1020

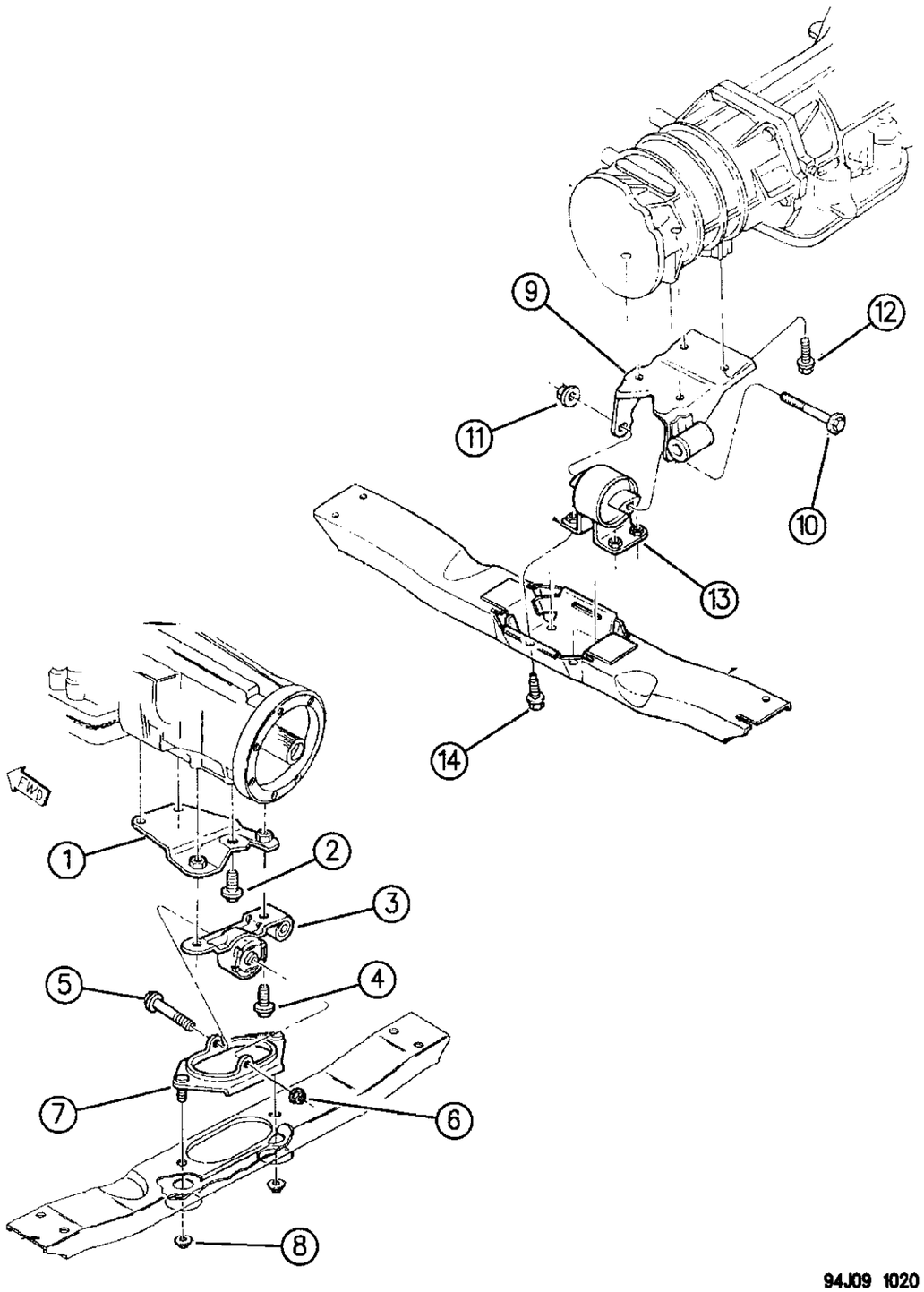

ITEM	PART NUMBER	QTY	BODY	MODEL	DESCRIPTION
					1994-95
1	5201 7696	1			ADAPTER, Bracket to Transmission
2	6033 358	3			SCREW, w/Washer, (7/16-14x1.25)
3	5205 8605	1			BRACKET ASSEMBLY, Rear Engine Mount ***
4	3420 1964	2			BOLT, Bracket to Adapter, (M12-1.75x40)
5	6502 809	1			BOLT, Flanged, (M12-1.75x110)
6	6502 697	1			NUT, Clevis to Bracket Assembly
7	5205 8225	1			BRACKET, Clevis Rear Engine Mount
8	6502 696	2			NUT, Flanged, Clevis to Crossmember, (M10-1.5)
					1996
9	5205 8784	1			BRACKET ASSEMBLY, Trans. ***
10	6504 312	1			SCREW, Bracket, (M12x1.75x147.00)
11	6502 697	1			NUT, Bracket, (M12x1.75)
12	6033 358	4			SCREW, Bracket, (.437-14x1.250)
13	5205 8488	1			SUPPORT ASSEMBLY, Trans. ***
14		4			SCREW, Support, (M10x1.50x35.00), (Not Serviced)

MODEL CODES:

72=2 DR Wagon
74=4 DR Wagon
77=Open Body 93" Whlbase
78=Open Body 103" Whlbase - Export
T=2WD
J,N=4WD
U=4WD (RHD)

BODY STYLES:

YJ=Wrangler (4X4) "S"
Weangler (4X4) SE
Wrangler (4X4) Sahara
Wrangler (4X4) Renegade
XJ=Cherokee SE
Cherokee Sport
Cherokee Country
ZJ=Grand Cherokee SE
Grand Cherokee Laredo
Grand Cherolee Limited
ZG=Grand Cherokee European
Y1=Wrangler
X1=Cherokee
Z1=Grand Cherokee
KDX=Vehicles

AR = Use as Required - = Non Illustrated Part P.A.R. = Paint as Required

« RETURN TO GROUP INDEX

SAGIPARTS

GROUP-9D
DIESEL ENGINE

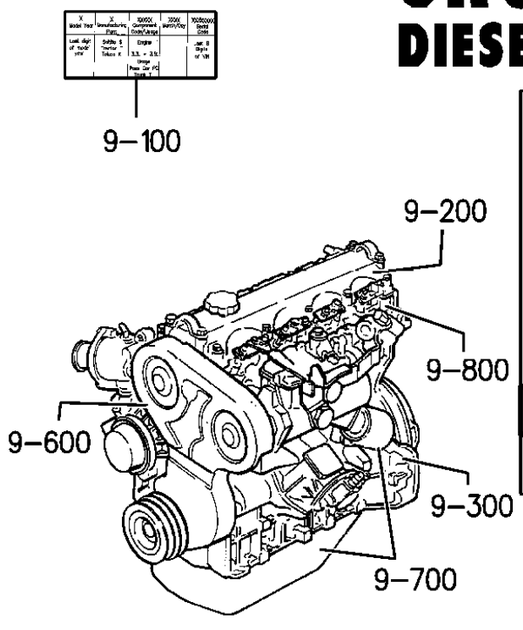

09A	(G) EDA = 2.5L ENGINE 4 CYL. (GAS) TBI
	(H) EPE = 2.5L ENGINE 4 CYL. (GAS) LEADED
	(P) EPE = 2.5L ENGINE 4 CYL. (GAS) UNLEADED
	(F) EPB = 2.5L ENGINE 4 CYL. (GAS) MPI
09B	(S) ERH UNLEADED = 4.0L ENGINE 6 CYL. (GAS) MPI
	(V) ERH LEADED = 4.0L ENGINE 6 CYL. (GAS) MPI
09C	(Y) ELF = 5.2L ENGINE 8 CYL. MPI
09D	(B) ENA = 2.1L ENGINE 4 CYL. DIESEL
09E	(M) ENC = 2.5L ENGINE 4 CYL. DIESEL

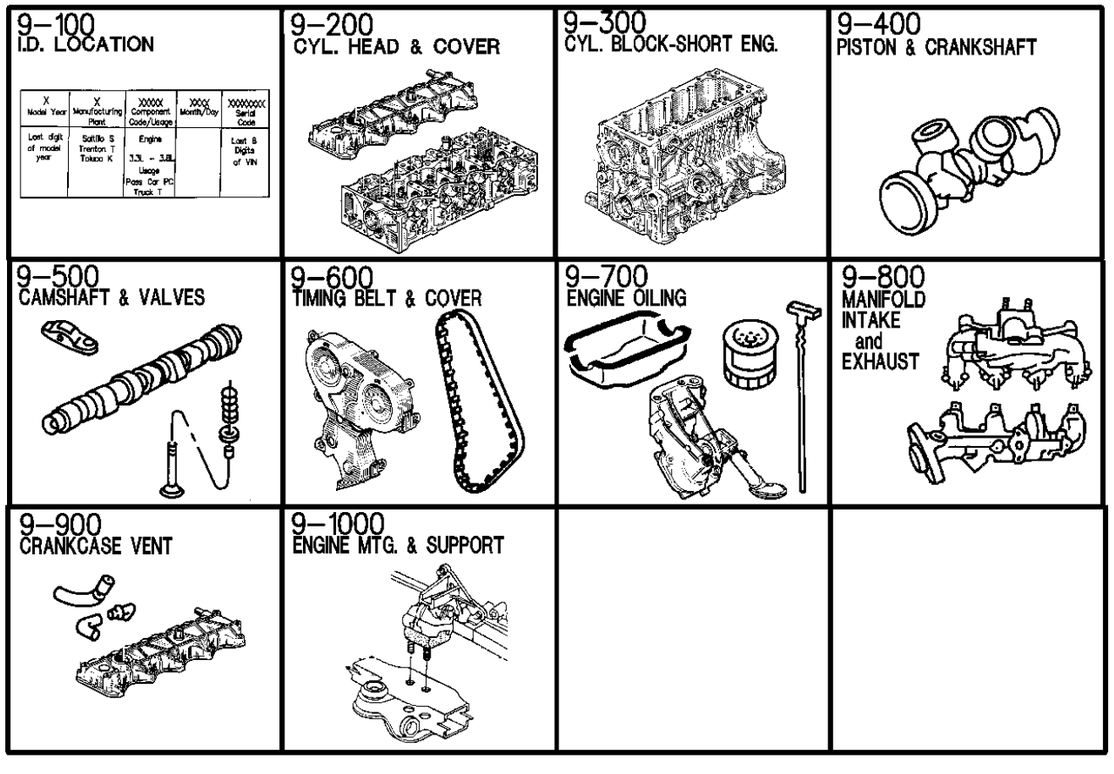

GROUP 9D - ENGINE, 4 CYLINDER DSL

ILLUSTRATION TITLE — **GROUP-FIG. NO.**

I.D. LOCATION
I.D. LOCATION 4.0L ENGINE . . . . . Fig. 9D-110

CYLINDER HEAD
CYLINDER HEAD 2.1L DIESEL ENGINE . . . . . Fig. 9D-210

CYLINDER BLOCK
ENGINE BLOCK 2.1L DIESEL ENGINE . . . . . Fig. 9D-310

CRANKSHAFT, PISTON, AND TORQUE CONVERTER
CRANKSHAFT, PISTON, AND TORQUE CONVERTER 2.1L DIESEL ENGINE . . . . . Fig. 9D-410

CAMSHAFT AND VALVES
CAMSHAFT AND VALVES 2.1L DIESEL ENGINE . . . . . Fig. 9D-510

TIMING COVER AND INTERMEDIATE SHAFT
TIMING COVER AND INTERMEDIATE SHAFT 2.1L DIESEL ENGINE . . . . . Fig. 9D-610

ENGINE OILING
ENGINE OILING 2.1L DIESEL ENGINE . . . . . Fig. 9D-710
OIL LINES 2.1L DIESEL ENGINE . . . . . Fig. 9D-715
OIL COOLER AND FILTER 2.1L DIESEL ENGINE . . . . . Fig. 9D-750

MANIFOLDS
MANIFOLD, INTAKE AND EXHAUST 2.1L DIESEL ENGINE . . . . . Fig. 9D-810

CRANKCASE VENTILATION
OIL, SEPARATOR 2.1L DIESEL ENGINE, J8S-814 . . . . . Fig. 9D-910
OIL SEPARATOR 2.1L DIESEL ENGINE, J8S-890 . . . . . Fig. 9D-915

ENGINE MOUNTS
ENGINE MOUNTING 2.1L DIESEL ENGINE . . . . . Fig. 9D-1010

I.D. LOCATION 4.0L ENGINE
Figure 9D-110

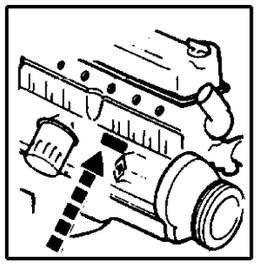

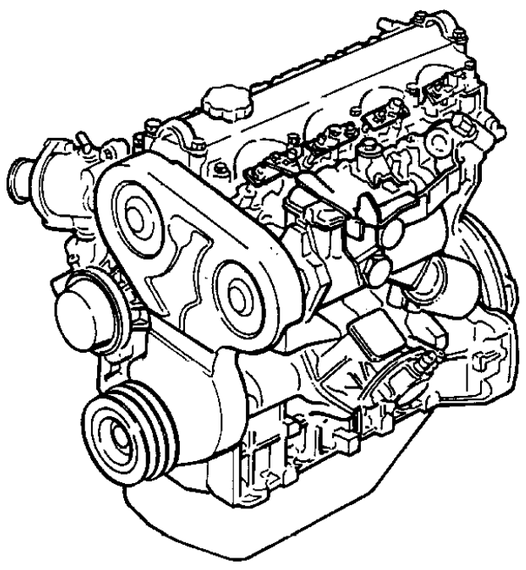

94J59 110

ITEM	PART NUMBER	QTY	BODY	MODEL	DESCRIPTION
1					Engine Identification Tag: J8S-814 or J8S-890 ***

MODEL CODES:

72=2 DR Wagon
74=4 DR Wagon
77=Open Body 93" Whlbase
78=Open Body 103" Whlbase - Export
T=2WD
J,N=4WD
U=4WD (RHD)

BODY STYLES:

YJ=Wrangler (4X4) "S"
Weangler (4X4) SE
Wrangler (4X4) Sahara
Wrangler (4X4) Renegade

XJ=Cherokee SE
Cherokee Sport
Cherokee Country

ZJ=Grand Cherokee SE
Grand Cherokee Laredo
Grand Cherolee Limited
ZG=Grand Cherokee European

Y1=Wrangler
X1=Cherokee
Z1=Grand Cherokee
KDX=Vehicles

AR = Use as Required - = Non Illustrated Part P.A.R. = Paint as Required

CYLINDER HEAD 2.1L DIESEL ENGINE
Figure 9D-210

9D-210E

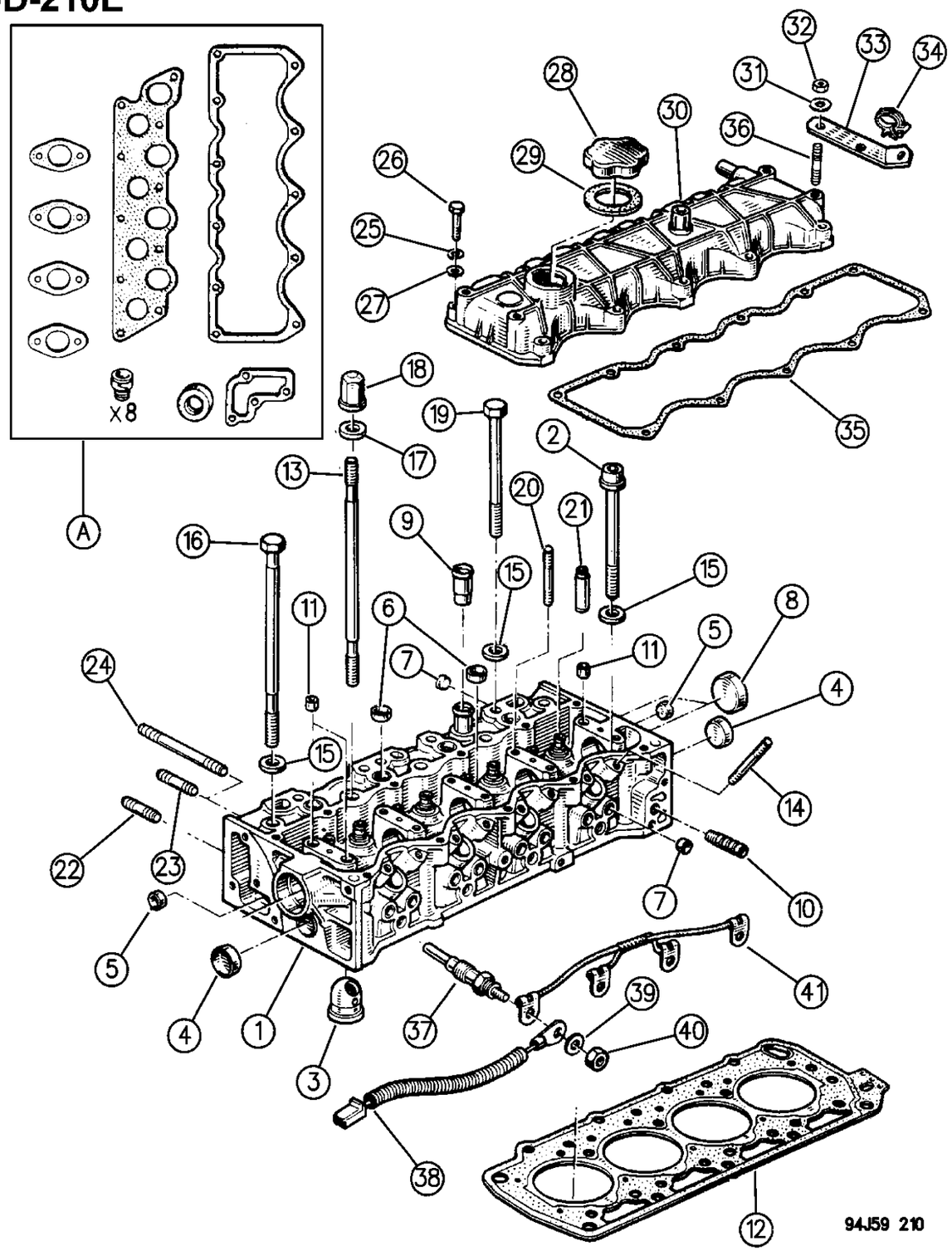

ITEM	PART NUMBER	QTY	BODY	MODEL	DESCRIPTION
A	J146 7610	1			GASKET PACKAGE, Engine Upper ***
1	T146 3380	1			HEAD, Engine Cylinder ***
2	J066 0908	AR			BOLT, (134mm)
3	T146 2231	4			CHAMBER, Precombustion ***
4	J307 5143	2			PLUG
5	T307 5141	2			PLUG
6	T307 5142	2			PLUG
7					PLUG
	T307 5032	AR			(10mm)
	T307 5039	AR			(12mm)
8	T307 5144	2			PLUG
9					NIPPLE, Coolant
	T063 8975	1			(18.0mm)
	T063 9062	1			(20.6mm)
10	T052 1772	1			FITTING ***
11	J065 9822	3			SLEEVE
12					GASKET
	T102 8289	1			(1.6mm)
	T071 1666	1			(1.7mm)
	T102 8290	1			(1.8mm)
13	T067 5862	3			STUD
14	T302 7077	8			STUD
15	T066 2634	AR			WASHER
16	J073 0882	2			BOLT, (247mm)
17	T067 5868	AR			WASHER
18	T067 5866	3			NUT
19	J085 5231	8			BOLT, (148mm)
20	T302 7211	AR			STUD
21	T146 2486	8			GUIDE, 13.35mm
22	T302 7025	AR			STUD, (41mm)
23	T302 7129	AR			STUD, (47mm)
24	T302 7166	AR			STUD, (131mm)
25	T140 2092	11			WASHER, Lock
26	J300 1607	11			BOLT, (45mm)
27	T140 2065	11			WASHER, Flat
28	T074 1840	1			CAP
29	T071 8985	1			GASKET
30					COVER, Cylinder Head
	T071 7274	1			J8S-814
	J085 3918	1			J8S-890
31	1150 0255	2			WASHER
32	T149 3047	2			NUT

MODEL CODES:

72=2 DR Wagon
74=4 DR Wagon
77=Open Body 93" Whlbase
78=Open Body 103" Whlbase - Export
T=2WD
J,N=4WD
U=4WD (RHD)

BODY STYLES:

YJ=Wrangler (4X4) "S"
Weangler (4X4) SE
Wrangler (4X4) Sahara
Wrangler (4X4) Renegade
XJ=Cherokee SE
Cherokee Sport
Cherokee Country
ZJ=Grand Cherokee SE
Grand Cherokee Laredo
Grand Cherolee Limited
ZG=Grand Cherokee European
Y1=Wrangler
X1=Cherokee
Z1=Grand Cherokee
KDX=Vehicles

AR = Use as Required - = Non Illustrated Part P.A.R. = Paint as Required

9D-210E

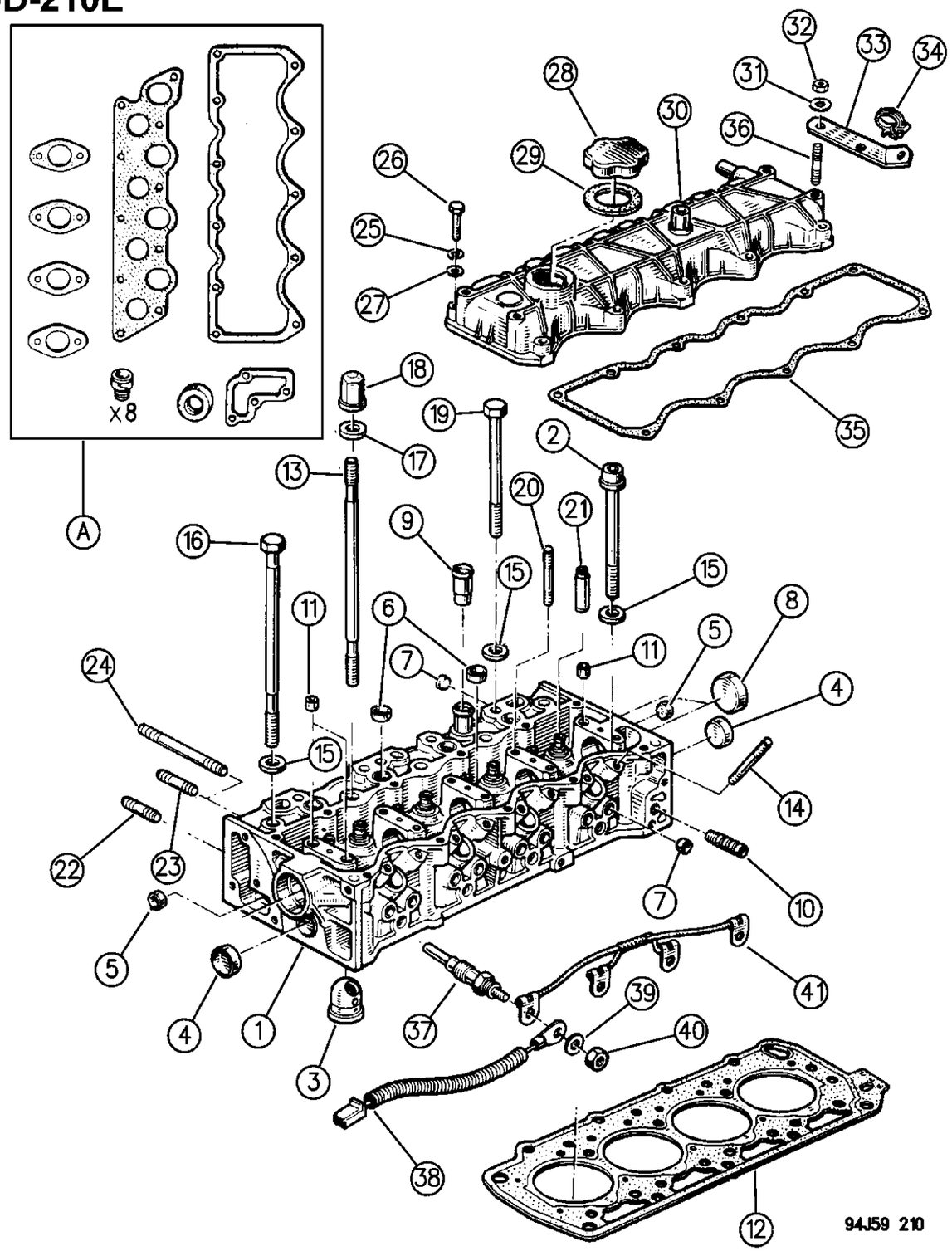

ITEM	PART NUMBER	QTY	BODY	MODEL	DESCRIPTION
33	T069 1636	1			BRACKET
34	T307 9103	1			CLIP
35	J074 3953	1			GASKET
36	T302 7065	2			STUD
37	T134 9475	4			PLUG, Glow
38	5603 2504	2			HARNESS, Glow Plug
39	T305 7031	4			WASHER
40	T140 5672	4			NUT
41	T198 6538	1			HARNESS, Glow Plug

MODEL CODES:

72=2 DR Wagon
74=4 DR Wagon
77=Open Body 93" Whlbase
78=Open Body 103" Whlbase - Export
T=2WD
J,N=4WD
U=4WD (RHD)

BODY STYLES:

YJ=Wrangler (4X4) "S"
Weangler (4X4) SE
Wrangler (4X4) Sahara
Wrangler (4X4) Renegade
XJ=Cherokee SE
Cherokee Sport
Cherokee Country
ZJ=Grand Cherokee SE
Grand Cherokee Laredo
Grand Cherolee Limited
ZG=Grand Cherokee European
Y1=Wrangler
X1=Cherokee
Z1=Grand Cherokee
KDX=Vehicles

AR = Use as Required - = Non Illustrated Part P.A.R. = Paint as Required

ENGINE BLOCK 2.1L DIESEL ENGINE
Figure 9D-310

9D-310D

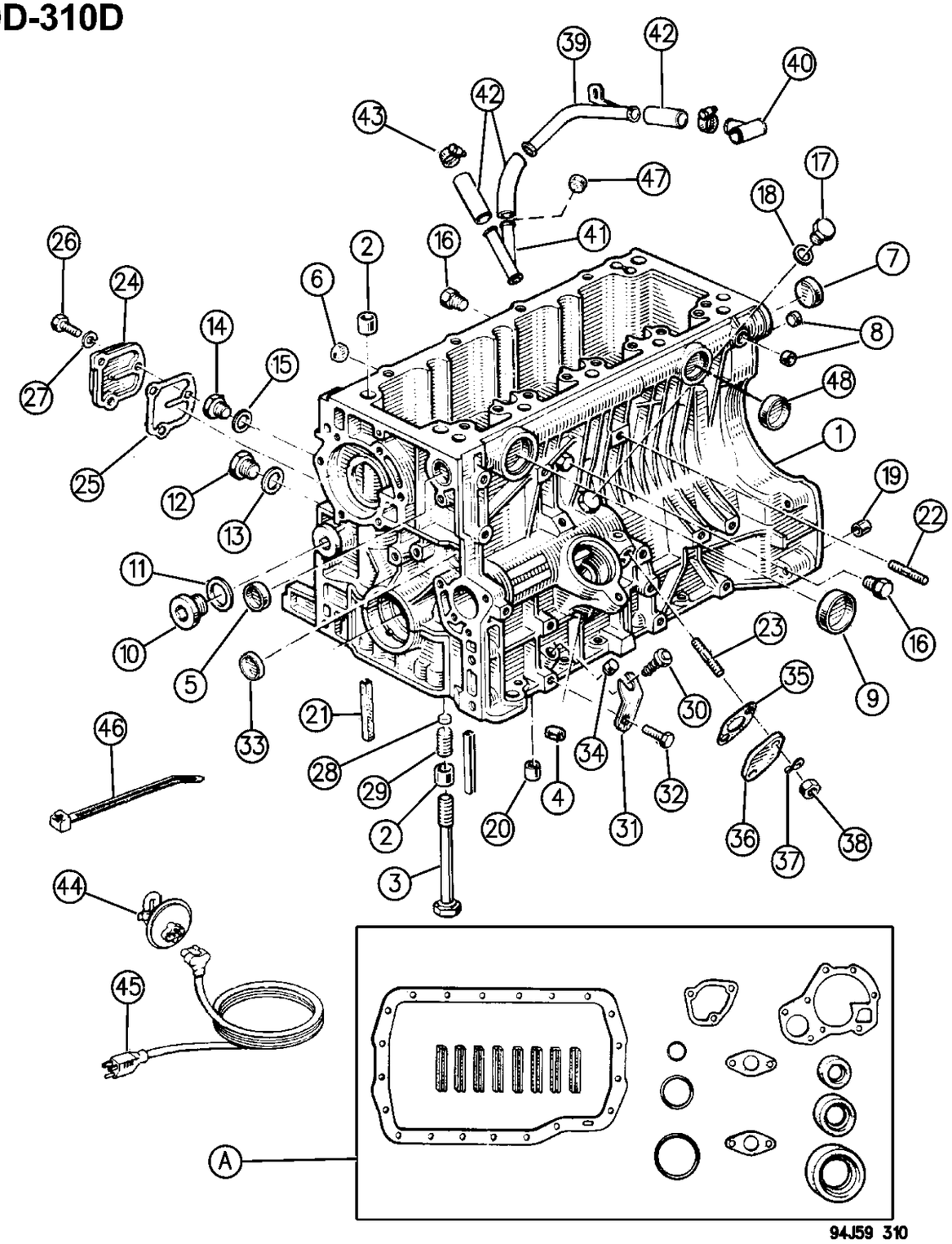

ITEM	PART NUMBER	QTY	BODY	MODEL	DESCRIPTION
					ENGINE, Complete, w/o Turbo ***
	T146 3606	1			J8S-814
	J146 6339	1			J8S-890
A	T146 4133	1			GASKET PACKAGE, Engine Lower ***
1					BLOCK, Engine
	T146 3647	1			J8S-814
	J146 6724	1			J8S-890
2	J501 0146	AR			PIN
3	T058 9081	10			BOLT
4					PLUG
	T307 5032	1			(10mm)
	T307 5039	1			(12mm)
5	J307 5143	1			PLUG
6	T307 5018	1			PLUG
7	T307 5034				PLUG
8	T307 5039	2			PLUG
9	T307 5144	1			PLUG
10	T307 5137	1			PLUG
11	T306 2015	1			GASKET
12	J307 5076	1			PLUG
13	T777 7650	1			GASKET
14	T307 5025	1			PLUG
15	T306 1028	1			GASKET
16	T307 5009	2			PLUG
17	T307 5029	1			PLUG
18	T306 2013	1			GASKET
19	T501 0126	AR			PIN
20	J501 0006	AR			PIN
21					SEAL
	T134 9381	AR			(5.10mm)
	T134 9382	AR			(5.40mm)
22	T302 7130	1			STUD
23	T302 7081	2			STUD
24	T067 7302	1			COVER, Rt., Engine Block Side
25	J073 3513	1			GASKET
26	T149 3034	3			BOLT
27	T140 2092	3			WASHER
28	T502 7023	AR			SEAL
29	T307 5118	1			PLUG
30	T489 5580	1			PLUG
31	T426 3080	1			RETAINER
32	T149 3030	1			BOLT

MODEL CODES:

72=2 DR Wagon
74=4 DR Wagon
77=Open Body 93" Whlbase
78=Open Body 103" Whlbase - Export
T=2WD
J,N=4WD
U=4WD (RHD)

BODY STYLES:

YJ=Wrangler (4X4) "S"
Weangler (4X4) SE
Wrangler (4X4) Sahara
Wrangler (4X4) Renegade
XJ=Cherokee SE
Cherokee Sport
Cherokee Country
ZJ=Grand Cherokee SE
Grand Cherokee Laredo
Grand Cherolee Limited
ZG=Grand Cherokee European
Y1=Wrangler
X1=Cherokee
Z1=Grand Cherokee
KDX=Vehicles

AR = Use as Required - = Non Illustrated Part P.A.R. = Paint as Required

ENGINE BLOCK 2.1L DIESEL ENGINE
Figure 9D-310

9D-310D

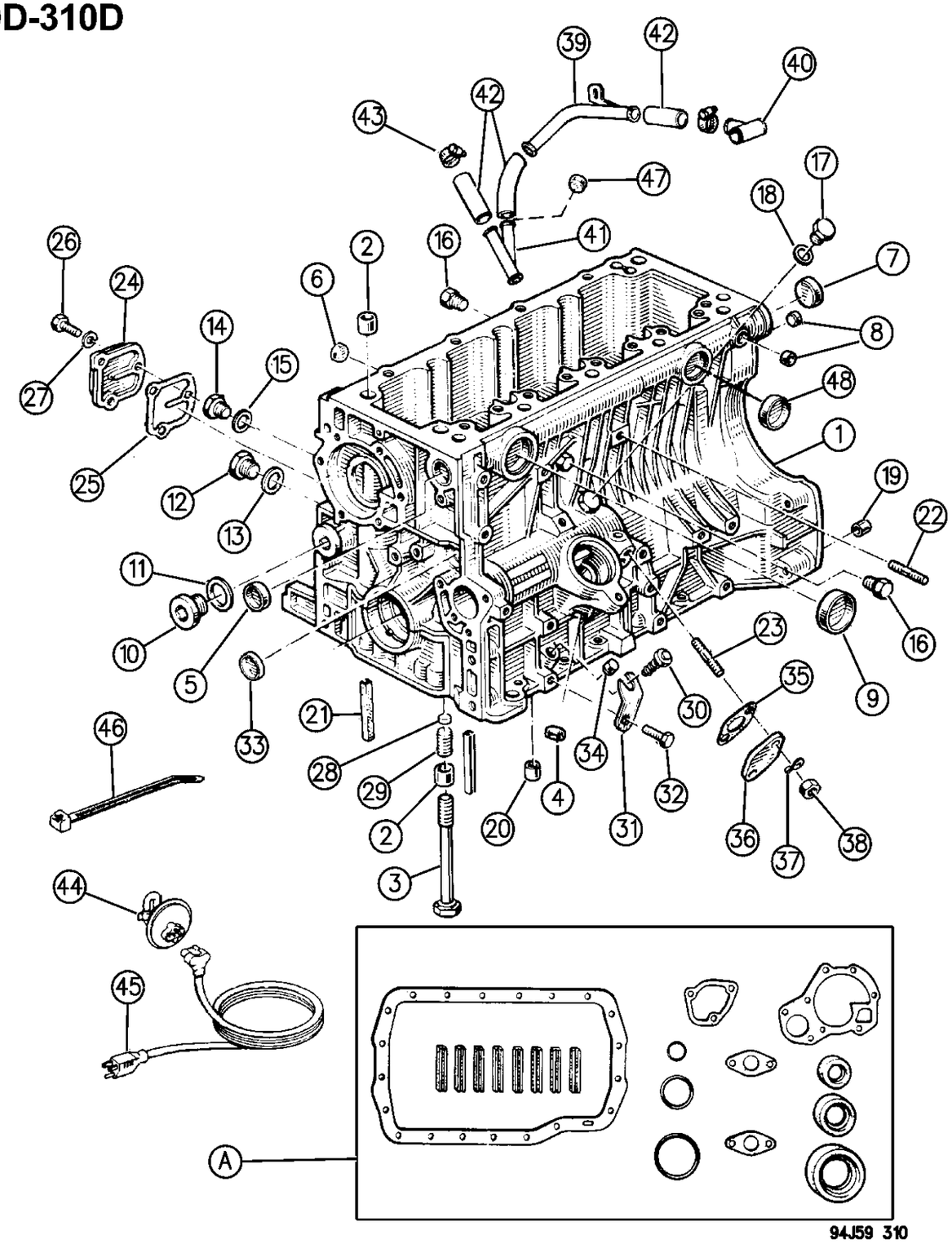

ITEM	PART NUMBER	QTY	BODY	MODEL	DESCRIPTION
33	T307 5015	1			PLUG
34	T307 5067	1			PLUG
35	T306 5088	1			GASKET
36	T066 9805	1			COVER, Lt., Engine Block Side
37	J305 7005	2			WASHER
38	T149 3047	2			NUT
39	5300 3925	1			TUBE, Engine Oil Drain, J8S-814
40	T072 7942	1			TEE, Oil Drain Upper, J8S-814
41	T072 7945	1			TEE, Oil Drain Lower
42	5300 3934	3			HOSE, J8S-814
43	J320 3076	6			CLAMP
44	8220 0119	1			HEATER, Engine Block
45	5600 0828	1			CORD, Power Supply
46					STRAP
	J322 3227	AR			(200mm)
	J369 3058	AR			(300mm)
	J323 0270	AR			(350mm)
	J323 5187	AR			(450mm)
47	J307 4462	1			PLUG, J8S-890
48	T307 5095	1			PLUG, J8S-890

MODEL CODES:

72=2 DR Wagon
74=4 DR Wagon
77=Open Body 93" Whlbase
78=Open Body 103" Whlbase - Export
T=2WD
J,N=4WD
U=4WD (RHD)

BODY STYLES:

YJ=Wrangler (4X4) "S"
Weangler (4X4) SE
Wrangler (4X4) Sahara
Wrangler (4X4) Renegade

XJ=Cherokee SE
Cherokee Sport
Cherokee Country

ZJ=Grand Cherokee SE
Grand Cherokee Laredo
Grand Cherolee Limited
ZG=Grand Cherokee European

Y1=Wrangler
X1=Cherokee
Z1=Grand Cherokee
KDX=Vehicles

AR = Use as Required - = Non Illustrated Part P.A.R. = Paint as Required

CRANKSHAFT, PISTON, AND TORQUE CONVERTER 2.1L DIESEL ENGINE
Figure 9D-410

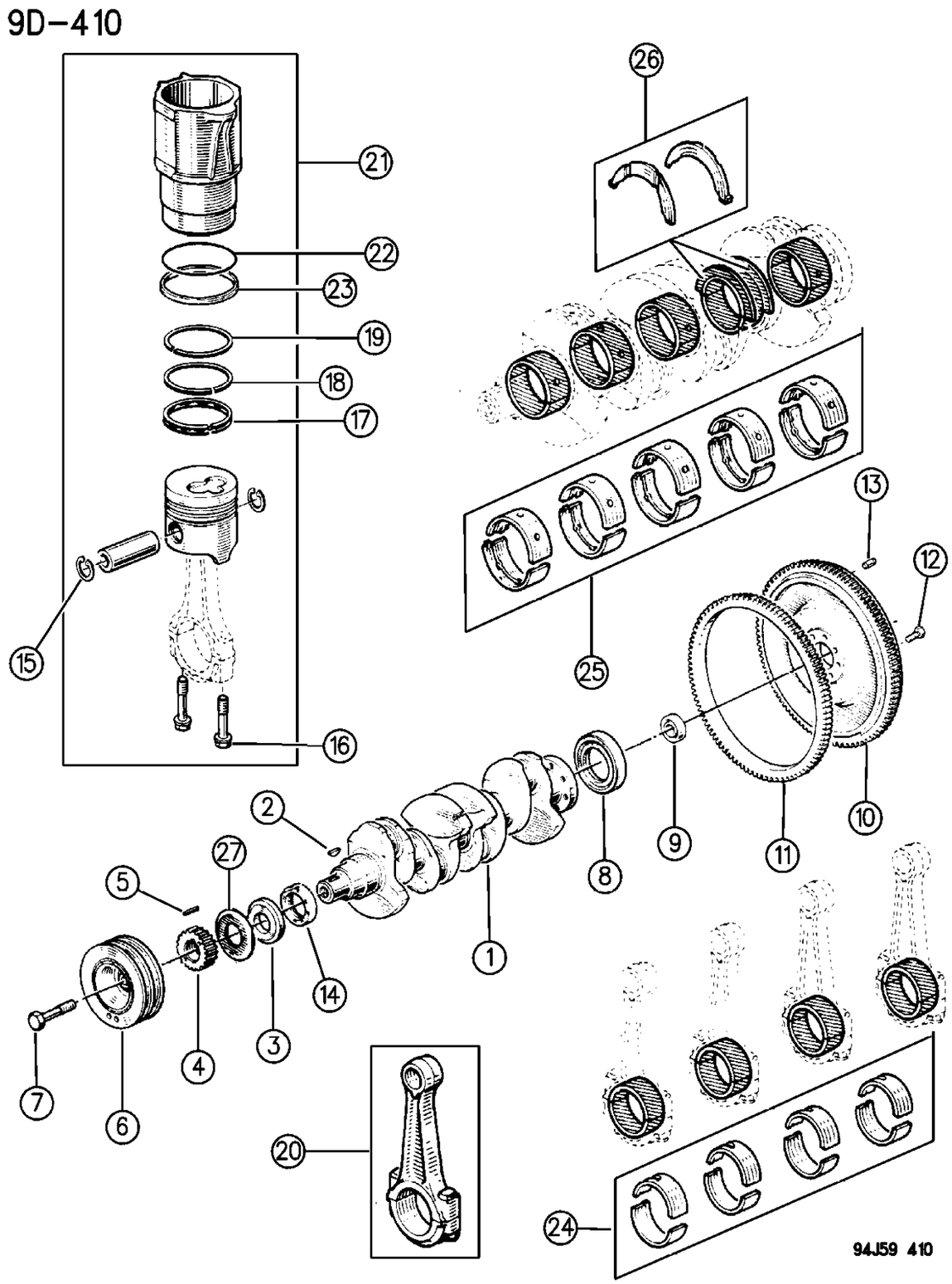

ITEM	PART NUMBER	QTY	BODY	MODEL	DESCRIPTION
1	J072 2325	1			CRANKSHAFT, w/o Bearings ***
2	T307 0006	1			KEY, Shaft
3	T061 6979	1			SPACER
4	T134 9583	1			SPROCKET, Crankshaft
5	T306 7080	1			PIN
6	T072 7596	1			PULLEY, Crankshaft
7	T067 0967	1			BOLT
8	J085 3373	1			SEAL
9	T309 0310	1			BEARING, Pilot
10	T159 6861	1			FLYWHEEL ***
11	T066 4055	1			GEAR, Ring ***
12	T064 7358	7			BOLT
13	T306 7256	3			PIN
14	J071 9274	1			SEAL
15	T067 6497	8			RETAINER, Piston Pin
16	J065 5434	8			BOLT
17					RING, Oil Control
					J8S-814
	T066 5606	4			Up To, #56519
	J074 9955	4			After, #56520
	J074 9955	4			J8S-890
18					RING, Lower Compression
					J8S-814
	T069 6139	4			Up To, #56519
	J074 9957	4			After, #56520
	J074 9957	4			J8S-890
	J074 9957	4			J8S-890
19					RING, Upper Compression
					J8S-814
	T069 6138	4			Up To, #56519
	J074 9956	4			After, #56520
	J074 9956	4			J8S-890
20	T146 2223	1			ROD SET, Connecting
21					PISTON PACKAGE, w/Sleeve ***
					J8S-814
	T146 3646	1			Up To, #56519
	J146 6305	1			After, #56520
	J146 6305	1			J8S-890
22	T134 8225	4			O-RING
23	T066 6025	4			GASKET
24					BEARING PACKAGE ***
	T146 2226	1			Standard
	T146 2227	1			.010 U/S

MODEL CODES:

72=2 DR Wagon
74=4 DR Wagon
77=Open Body 93" Whlbase
78=Open Body 103" Whlbase - Export
T=2WD
J,N=4WD
U=4WD (RHD)

BODY STYLES:

YJ=Wrangler (4X4) "S"
Weangler (4X4) SE
Wrangler (4X4) Sahara
Wrangler (4X4) Renegade
XJ=Cherokee SE
Cherokee Sport
Cherokee Country
ZJ=Grand Cherokee SE
Grand Cherokee Laredo
Grand Cherolee Limited
ZG=Grand Cherokee European
Y1=Wrangler
X1=Cherokee
Z1=Grand Cherokee
KDX=Vehicles

AR = Use as Required - = Non Illustrated Part P.A.R. = Paint as Required

CRANKSHAFT, PISTON, AND TORQUE CONVERTER 2.1L DIESEL ENGINE
Figure 9D-410

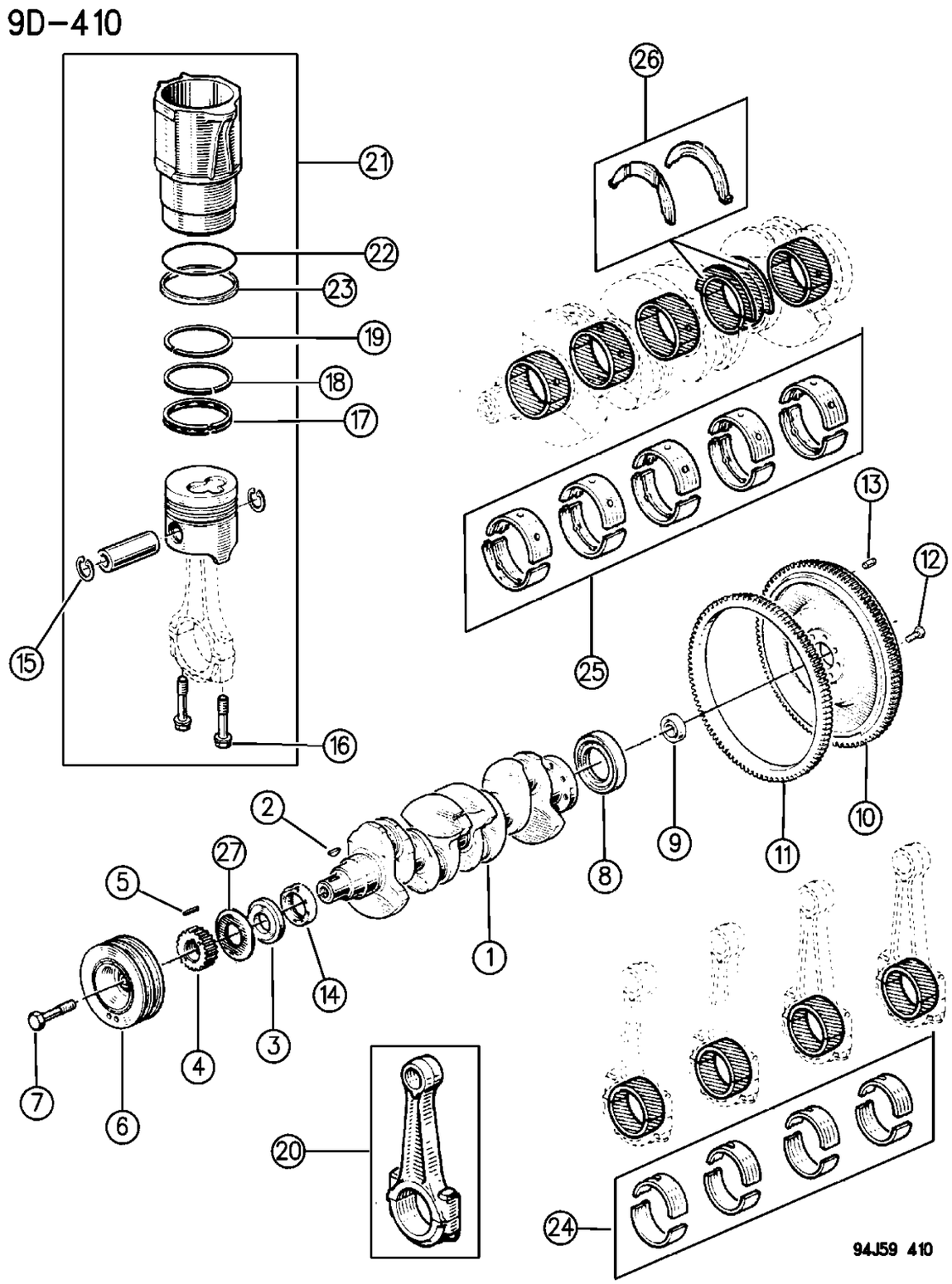

ITEM	PART NUMBER	QTY	BODY	MODEL	DESCRIPTION
25					BEARING PACKAGE ***
	T134 8542	1			Standard
	T134 8543	1			.010 U/S
26					BEARING PACKAGE, Thrust ***
	T134 8320	1			2.80mm to 2.85mm
	T134 8820	1			2.85mm to 2.90mm
	T134 8821	1			2.90mm to 2.95mm
	T134 8822	1			2.95mm to 3.00mm
27	T073 3447	1			SLINGER ***

MODEL CODES:

72=2 DR Wagon
74=4 DR Wagon
77=Open Body 93" Whlbase
78=Open Body 103" Whlbase - Export
T=2WD
J,N=4WD
U=4WD (RHD)

BODY STYLES:

YJ=Wrangler (4X4) "S"
Weangler (4X4) SE
Wrangler (4X4) Sahara
Wrangler (4X4) Renegade
XJ=Cherokee SE
Cherokee Sport
Cherokee Country
ZJ=Grand Cherokee SE
Grand Cherokee Laredo
Grand Cherolee Limited
ZG=Grand Cherokee European
Y1=Wrangler
X1=Cherokee
Z1=Grand Cherokee
KDX=Vehicles

AR = Use as Required - = Non Illustrated Part P.A.R. = Paint as Required

CAMSHAFT AND VALVES 2.1L DIESEL ENGINE
Figure 9D-510

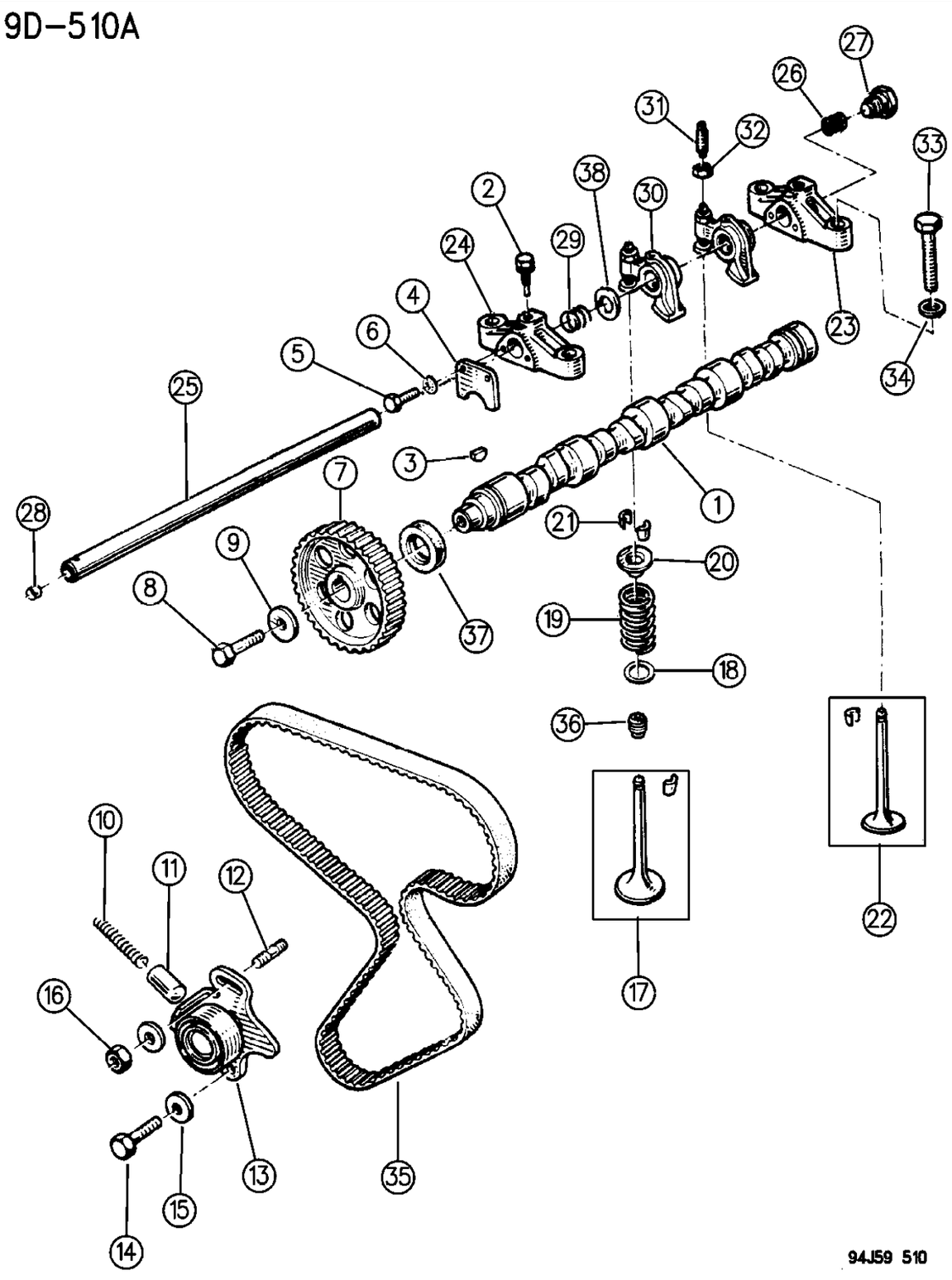

ITEM	PART NUMBER	QTY	BODY	MODEL	DESCRIPTION
1	T069 9231	1			CAMSHAFT
2	T024 5031	5			SCREW
3	T307 0007	1			KEY, Shaft
4	T058 7893	1			RETAINER, Camshaft Thrust
5	J300 1138	2			BOLT
6	T140 2083	2			WASHER
7	J070 9803	1			SPROCKET, Camshaft ***
8	T310 1091	1			BOLT
9	J400 6891	1			WASHER
10	T501 5125	1			SPRING
11	J065 3759	1			TENSIONER
12	T302 7065	1			STUD
13	T072 2452	1			IDLER, Timing Belt
14	T140 5667	1			BOLT
15	1150 0255	2			WASHER
16	T149 3047	1			NUT
17	T146 2232	1			VALVE PACKAGE, Intake
18	J305 3700	8			SEAT, Spring
19	T067 3343	8			SPRING
20	T026 8948	8			RETAINER
21	T134 9125	16			KEEPER ***
22	T146 1339	1			VALVE PACKAGE, Exhaust
23	T065 4085	4			BRACE
24	T065 4084	1			BRACE
25	J146 4082	1			SHAFT, Rocker Arm
26	T065 0095	1			FILTER, Rocker Shaft Oil
27	T307 5053	1			PLUG
28	T307 5039	1			PLUG
29	T065 9821	AR			SPRING
30	J600 6610	8			ARM, Valve Rocker
31	J073 0361	8			SCREW
32	T303 3042	8			NUT
33	J018 1613	AR			BOLT
34	T777 7658	AR			WASHER
35	T066 3544	1			BELT, Timing
36	T073 7124	8			SEAL
37	T134 9626	1			SEAL
38	T073 3736	AR			SPACER

MODEL CODES:

72=2 DR Wagon
74=4 DR Wagon
77=Open Body 93" Whlbase
78=Open Body 103" Whlbase - Export
T=2WD
J,N=4WD
U=4WD (RHD)

BODY STYLES:

YJ=Wrangler (4X4) "S"
Weangler (4X4) SE
Wrangler (4X4) Sahara
Wrangler (4X4) Renegade
XJ=Cherokee SE
Cherokee Sport
Cherokee Country
ZJ=Grand Cherokee SE
Grand Cherokee Laredo
Grand Cherolee Limited
ZG=Grand Cherokee European
Y1=Wrangler
X1=Cherokee
Z1=Grand Cherokee
KDX=Vehicles

AR = Use as Required - = Non Illustrated Part P.A.R. = Paint as Required

« RETURN TO GROUP INDEX

TIMING COVER AND INTERMEDIATE SHAFT 2.1L DIESEL ENGINE
Figure 9D-610

9D-610

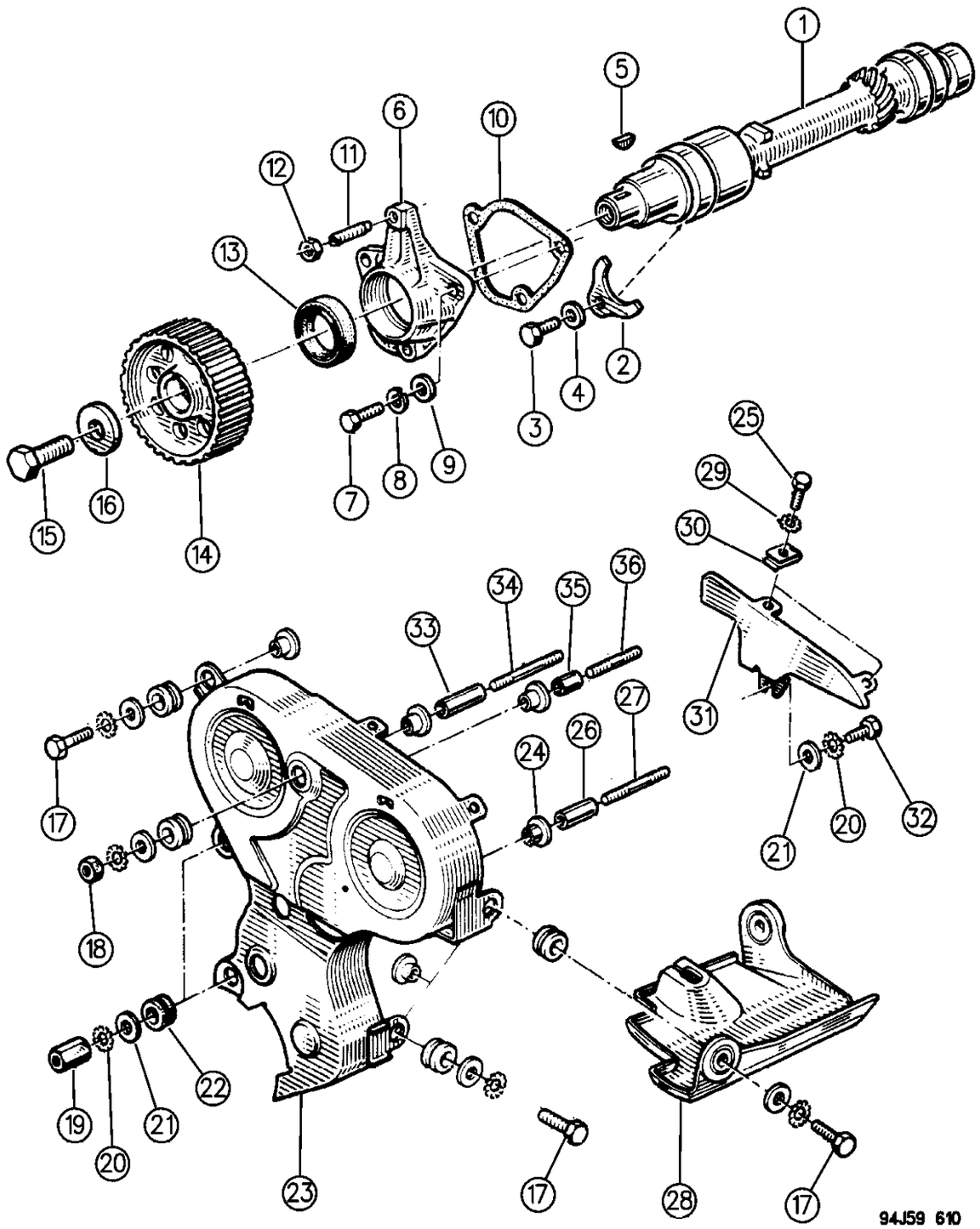

ITEM	PART NUMBER	QTY	BODY	MODEL	DESCRIPTION
1	T059 0867	1			SHAFT, Intermediate
2	T072 4890	1			RETAINER, Shaft Thrust
3	T149 3030	1			BOLT
4	1150 0255	1			WASHER
5	T307 0007	1			KEY, Shaft
6	T065 5189	1			COVER, Intermediate Shaft
7	T300 1142	3			BOLT
8	T140 2092	3			WASHER, Lock
9	T140 2065	3			WASHER, Flat
10	J073 7414	1			GASKET
11	T302 7117	1			SCREW, Adjusting
12	T149 3045	1			NUT
13	J071 9273	1			SEAL
14	T134 9584	1			SPROCKET, Intermediate Shaft
15	T310 1069	1			BOLT
16	T305 3189	1			WASHER
17	T300 1142	3			BOLT
18	J303 2012	1			NUT
19	T303 2079	2			NUT, Sleeve
20	T140 2083	7			WASHER, Lock
21	T140 2067	7			WASHER, Flat
22	T063 4996	6			GROMMET
23	T066 4709	1			COVER, Timing Case Front
24	T061 6373	6			BUSHING
25	T300 1118	2			BOLT
26	T500 1001	1			SLEEVE
27	T302 7095	1			STUD
28	T069 3037	1			SHIELD, Alternator
29	T140 2082	2			WASHER PACKAGE, (100 Pcs) ***
30	T304 6048	2			NUT, Clip
31	T066 4756	1			COVER, Timing Case Rear
32	T149 3034	1			BOLT
33	T500 1002	1			SLEEVE
34	T302 7151	1			STUD
35	T500 1000	1			SLEEVE
36	T302 7113	1			STUD

MODEL CODES:

72=2 DR Wagon
74=4 DR Wagon
77=Open Body 93" Whlbase
78=Open Body 103" Whlbase - Export
T=2WD
J,N=4WD
U=4WD (RHD)

BODY STYLES:

YJ=Wrangler (4X4) "S"
Weangler (4X4) SE
Wrangler (4X4) Sahara
Wrangler (4X4) Renegade

XJ=Cherokee SE
Cherokee Sport
Cherokee Country

ZJ=Grand Cherokee SE
Grand Cherokee Laredo
Grand Cherolee Limited
ZG=Grand Cherokee European

Y1=Wrangler
X1=Cherokee
Z1=Grand Cherokee
KDX=Vehicles

AR = Use as Required - = Non Illustrated Part P.A.R. = Paint as Required

« RETURN TO GROUP INDEX

ENGINE OILING 2.1L DIESEL ENGINE
Figure 9D-710

9D-710

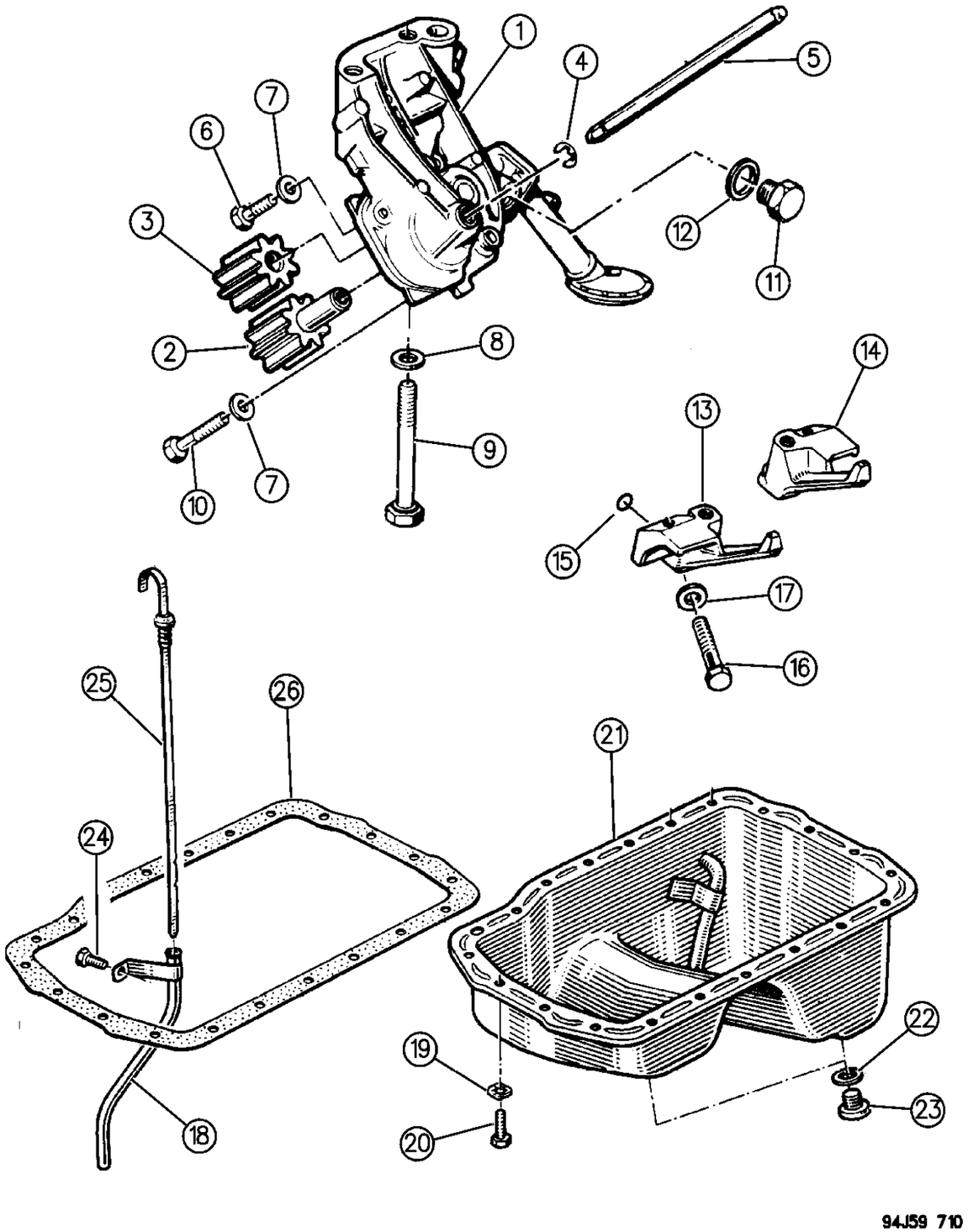

ITEM	PART NUMBER	QTY	BODY	MODEL	DESCRIPTION
1	T600 4404	1			PUMP, Oil
2	T072 4210	1			GEAR, Oil Pump Drive
3	J146 5761	1			GEAR, Oil Pump Driven
4	T306 6231	1			CLIP, Oil Pump Shaft
5	T072 4211	1			SHAFT, Oil Pump Gear
6	T300 1142	AR			BOLT
7	T140 2065	AR			WASHER
8	T140 2071	2			WASHER
9	T310 1057	2			BOLT
10	T300 1123	AR			BOLT
11	T307 5025	1			PLUG
12	T306 1028	1			GASKET
13	J073 6472	2			JET, Piston Oil Cooling
14	J073 6473	2			JET, Piston Oil Cooling
15	T306 5104	4			SEAL
16	T300 1614	4			BOLT
17	T305 3666	4			WASHER
18	T072 5913	1			TUBE, Oil Indicator
19	T149 3072	21			WASHER
20	T149 3034	21			BOLT
21	T146 3599	1			PAN, Oil ***
22	J306 2062	2			GASKET, Oil Drain Plug
23	T307 5129	2			PLUG
24	1150 4336	1			BOLT
25	T071 3429	1			INDICATOR, Oil Level ***
26	T069 5943	1			GASKET

MODEL CODES:

72=2 DR Wagon
74=4 DR Wagon
77=Open Body 93" Whlbase
78=Open Body 103" Whlbase - Export
T=2WD
J,N=4WD
U=4WD (RHD)

BODY STYLES:

YJ=Wrangler (4X4) "S"
Weangler (4X4) SE
Wrangler (4X4) Sahara
Wrangler (4X4) Renegade
XJ=Cherokee SE
Cherokee Sport
Cherokee Country
ZJ=Grand Cherokee SE
Grand Cherokee Laredo
Grand Cherolee Limited
ZG=Grand Cherokee European
Y1=Wrangler
X1=Cherokee
Z1=Grand Cherokee
KDX=Vehicles

AR = Use as Required - = Non Illustrated Part P.A.R. = Paint as Required

« RETURN TO GROUP INDEX

OIL LINES 2.1L DIESEL ENGINE
Figure 9D-715

9D-715

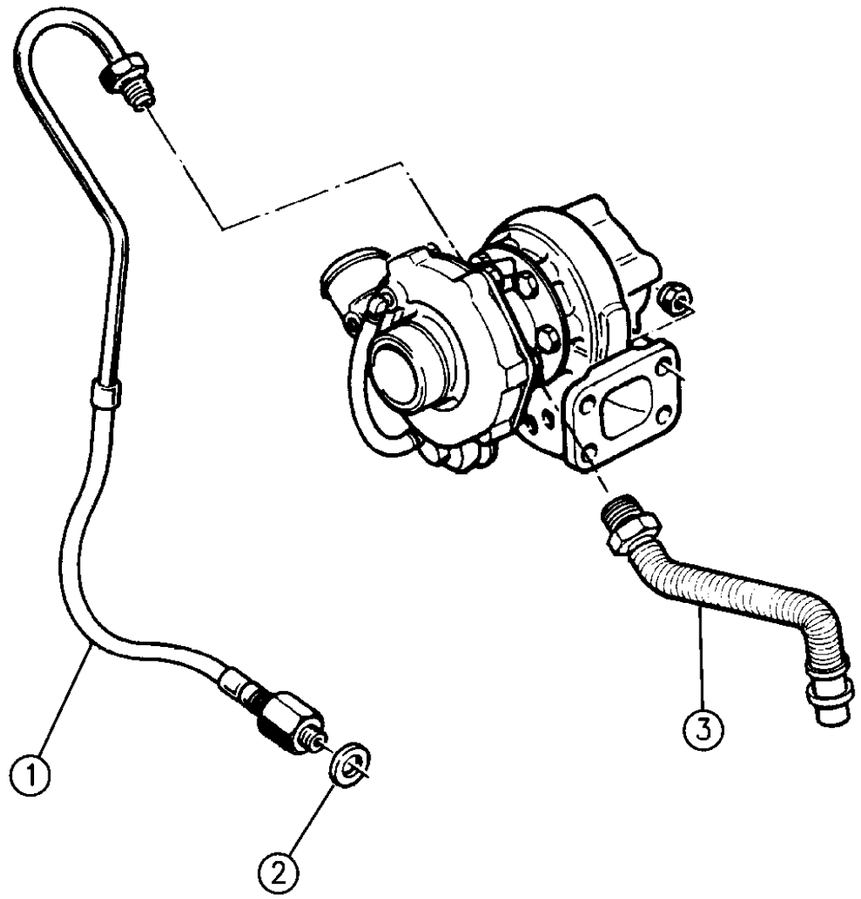

94J59 715

ITEM	PART NUMBER	QTY	BODY	MODEL	DESCRIPTION
1	T072 7702	1			TUBE, Oil Supply
2	T777 7650	1			GASKET
3	8350 7177	1			HOSE, Oil Return

MODEL CODES:

72=2 DR Wagon
74=4 DR Wagon
77=Open Body 93" Whlbase
78=Open Body 103" Whlbase - Export
T=2WD
J,N=4WD
U=4WD (RHD)

BODY STYLES:

YJ=Wrangler (4X4) "S"
Weangler (4X4) SE
Wrangler (4X4) Sahara
Wrangler (4X4) Renegade
XJ=Cherokee SE
Cherokee Sport
Cherokee Country
ZJ=Grand Cherokee SE
Grand Cherokee Laredo
Grand Cherolee Limited
ZG=Grand Cherokee European
Y1=Wrangler
X1=Cherokee
Z1=Grand Cherokee
KDX=Vehicles

AR = Use as Required - = Non Illustrated Part P.A.R. = Paint as Required

OIL COOLER AND FILTER 2.1L DIESEL ENGINE
Figure 9D-750

9D–750

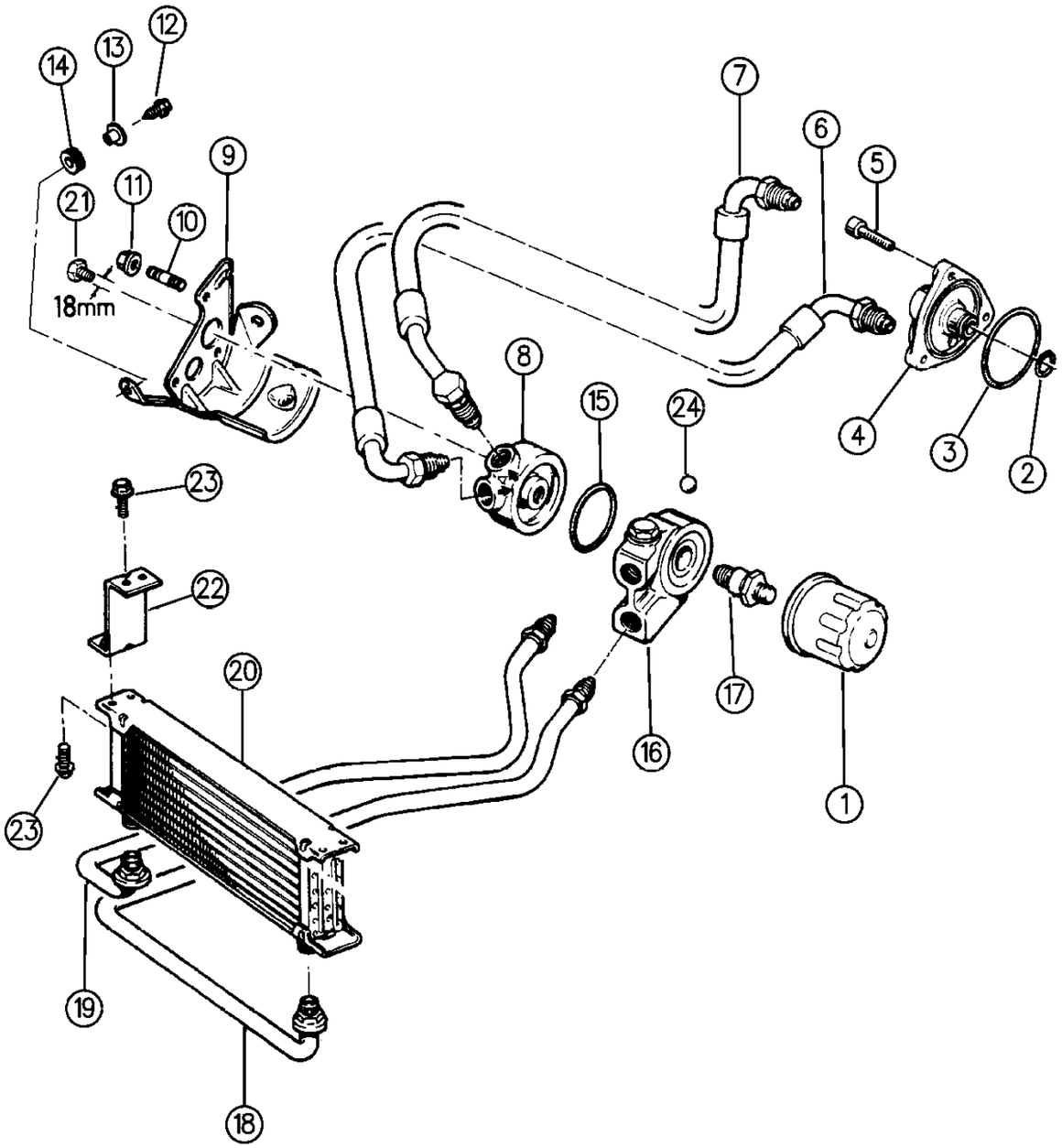

94J59 750

ITEM	PART NUMBER	QTY	BODY	MODEL	DESCRIPTION
1	T073 0077	1			FILTER, Oil
2	T306 5091	1			SEAL
3	T306 5090	1			GASKET
4	T070 2948	1			ADAPTER, Oil Filter
5	T300 9104	3			BOLT
6	5300 1923	1			HOSE, Remote Filter Supply
7	3300 1312	1			HOSE, Remote Filter Return
8	J072 2458	1			ADAPTER, Oil Filter
9	3300 1313	1			BRACKET, Remote Oil Filter
10	T302 7081	3			STUD
11	J420 0046	3			NUT
12					SCREW
	3420 1895	1			(16mm)
	3420 1691	2			(20mm)
13					BUSHING
	3300 2747	1			(12.0mm)
	3300 2748	2			(10.6mm)
14					GROMMET
	3300 2744	1			(11.7mm)
	3300 2745	1			(10.3mm)
15	3420 2316	1			O-RING
16	5200 1633	1			VALVE, Oil Cooler By-Pass
17	5200 1658	1			CONNECTOR
18	5202 7731	1			TUBE, Lt., Oil Cooler
19	5200 1632	1			TUBE, Rt., Oil Cooler
20	5202 7730	1			COOLER, Engine Oil ***
21	5300 3926	1			PLUG, Filter Clog Unit
22	5200 2830	2			BRACKET, Oil Cooler
23	6101 285	8			BOLT
24	8350 4927	1			BALL

MODEL CODES:

72=2 DR Wagon
74=4 DR Wagon
77=Open Body 93" Whlbase
78=Open Body 103" Whlbase - Export
T=2WD
J,N=4WD
U=4WD (RHD)

BODY STYLES:

YJ=Wrangler (4X4) "S"
Weangler (4X4) SE
Wrangler (4X4) Sahara
Wrangler (4X4) Renegade
XJ=Cherokee SE
Cherokee Sport
Cherokee Country
ZJ=Grand Cherokee SE
Grand Cherokee Laredo
Grand Cherolee Limited
ZG=Grand Cherokee European
Y1=Wrangler
X1=Cherokee
Z1=Grand Cherokee
KDX=Vehicles

AR = Use as Required - = Non Illustrated Part P.A.R. = Paint as Required

« RETURN TO GROUP INDEX

MANIFOLD, INTAKE AND EXHAUST 2.1L DIESEL ENGINE
Figure 9D-810

9D-810E

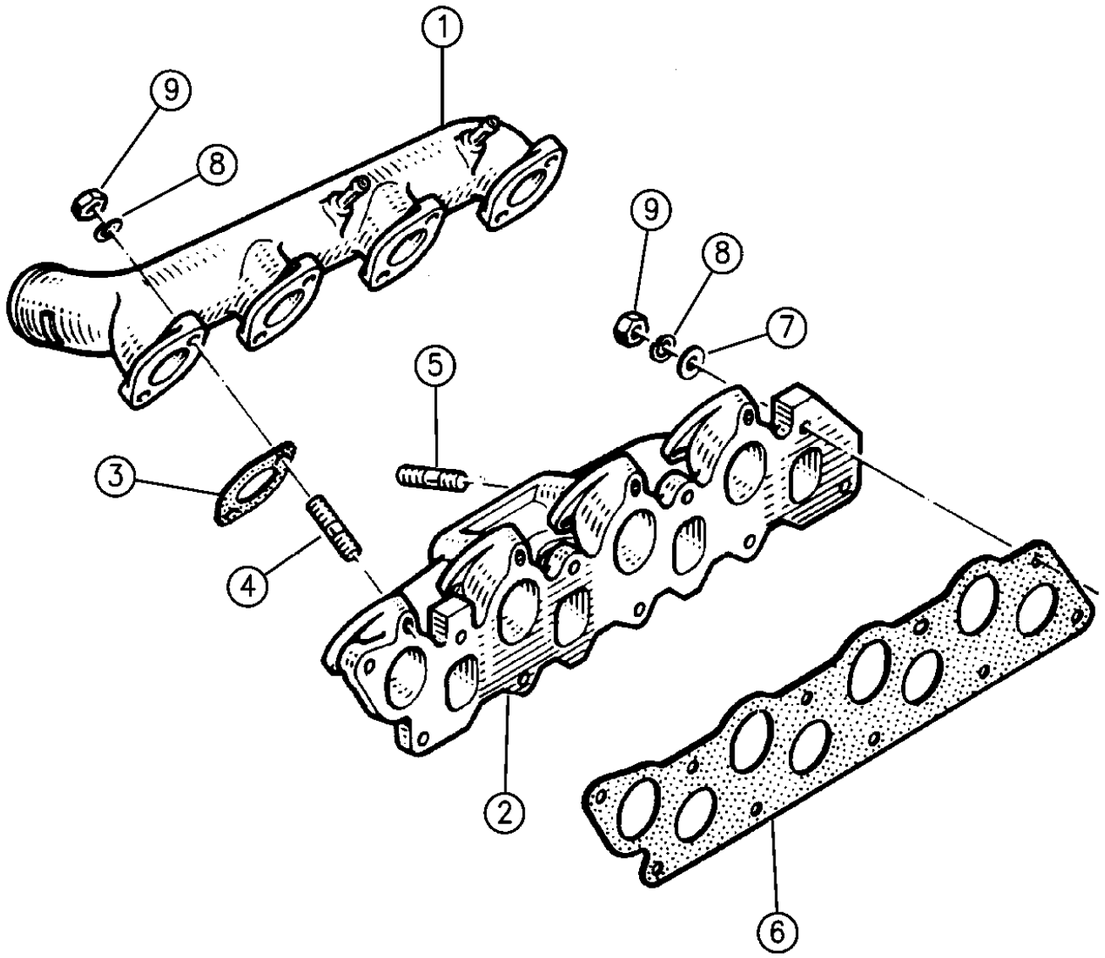

94J59 810

ITEM	PART NUMBER	QTY	BODY	MODEL	DESCRIPTION
1	T068 8218	1			MANIFOLD, Pre-Intake
2	J074 3551	1			MANIFOLD, Intake/Exhaust
3	T069 4729	4			GASKET
4	T302 7155	8			STUD
5	T302 7156	4			STUD
6	T134 8923	1			GASKET
7	1150 0255	10			WASHER, Flat
8	T140 2093	18			WASHER, Lock
9	T149 3047	18			NUT

MODEL CODES:

72=2 DR Wagon
74=4 DR Wagon
77=Open Body 93" Whlbase
78=Open Body 103" Whlbase - Export
T=2WD
J,N=4WD
U=4WD (RHD)

BODY STYLES:

YJ=Wrangler (4X4) "S"
Weangler (4X4) SE
Wrangler (4X4) Sahara
Wrangler (4X4) Renegade
XJ=Cherokee SE
Cherokee Sport
Cherokee Country
ZJ=Grand Cherokee SE
Grand Cherokee Laredo
Grand Cherolee Limited
ZG=Grand Cherokee European
Y1=Wrangler
X1=Cherokee
Z1=Grand Cherokee
KDX=Vehicles

AR = Use as Required - = Non Illustrated Part P.A.R. = Paint as Required

« RETURN TO GROUP INDEX

OIL, SEPARATOR 2.1L DIESEL ENGINE, J8S-814
Figure 9D-910

9D-910D

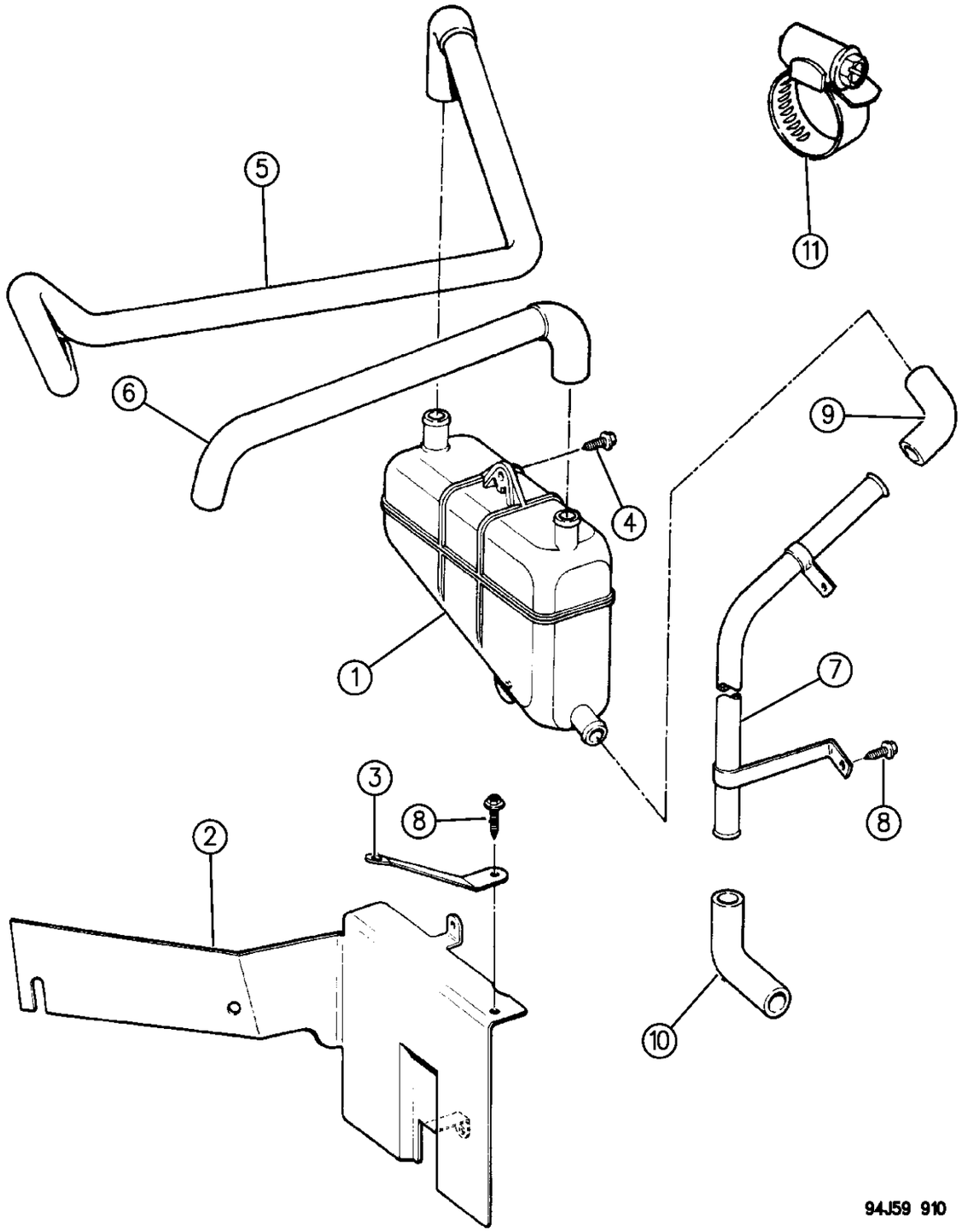

ITEM	PART NUMBER	QTY	BODY	MODEL	DESCRIPTION
1	J069 9090	1			TANK, Oil Separator ***
2	3300 2101	1			BRACKET, w/Shield
3	3300 2102	1			STRAP, Support
4	S941 9380	2			SCREW
5	5300 2320	1			HOSE, Separator to Turbo Inlet
6	5300 2321	1			HOSE, Separator to Valve Cover
7	5300 2212	1			TUBE ASSEMBLY, Separator Drain
8	3420 1895	2			SCREW
9	5300 2213	1			HOSE, Drain Tube Upper
10	5300 2214	1			HOSE, Drain Tube Lower
11					CLAMP, Hose
	3300 0784	AR			.67"-0.98"
	J320 3076	AR			.56"-1.06"
	J320 3077	AR			.81"-1.75"

MODEL CODES:

72=2 DR Wagon
74=4 DR Wagon
77=Open Body 93" Whlbase
78=Open Body 103" Whlbase - Export
T=2WD
J,N=4WD
U=4WD (RHD)

BODY STYLES:

YJ=Wrangler (4X4) "S"
Weangler (4X4) SE
Wrangler (4X4) Sahara
Wrangler (4X4) Renegade
XJ=Cherokee SE
Cherokee Sport
Cherokee Country
ZJ=Grand Cherokee SE
Grand Cherokee Laredo
Grand Cherolee Limited
ZG=Grand Cherokee European
Y1=Wrangler
X1=Cherokee
Z1=Grand Cherokee
KDX=Vehicles

AR = Use as Required - = Non Illustrated Part P.A.R. = Paint as Required

« RETURN TO GROUP INDEX

OIL SEPARATOR 2.1L DIESEL ENGINE, J8S-890
Figure 9D-915

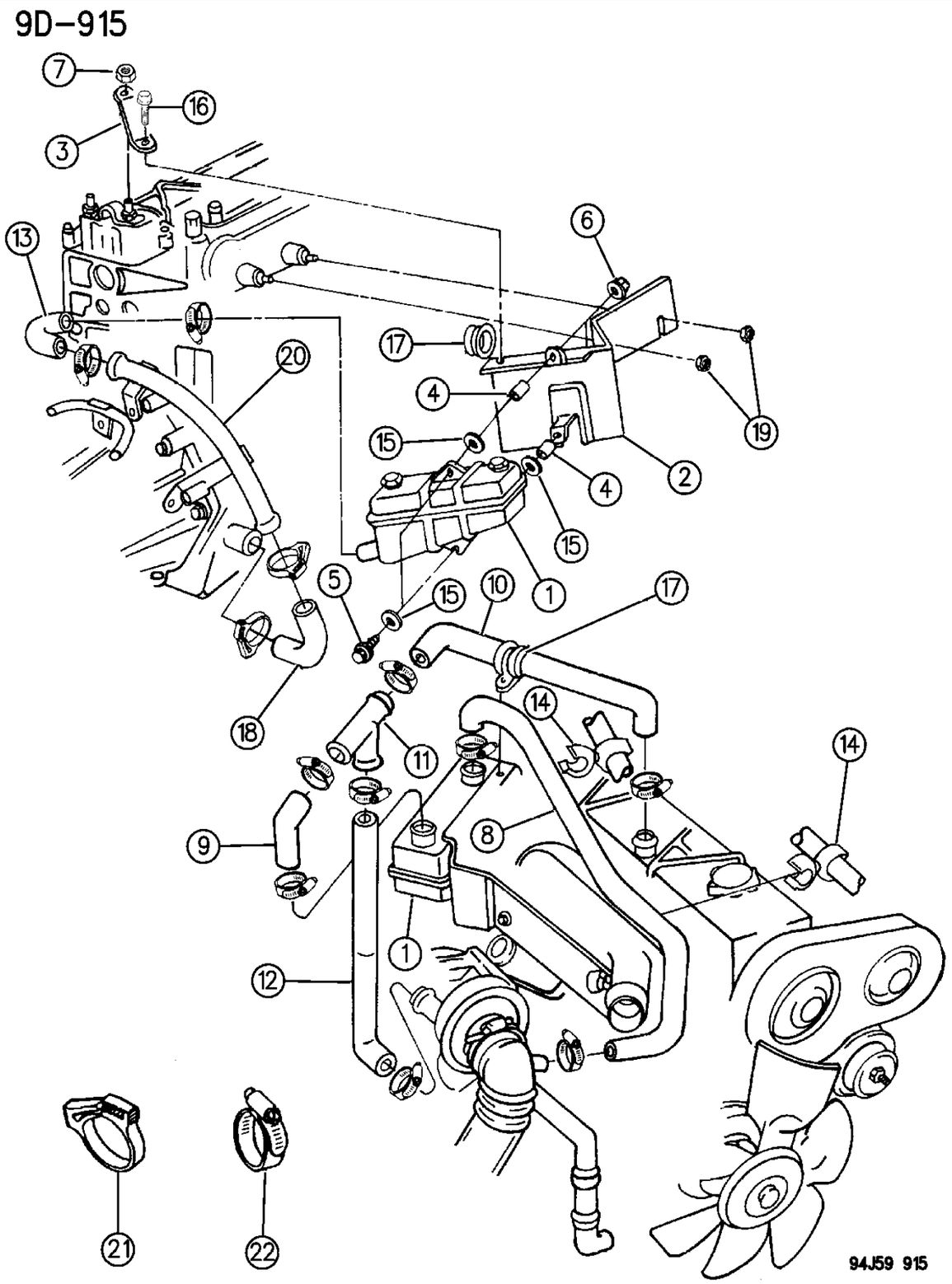

ITEM	PART NUMBER	QTY	BODY	MODEL	DESCRIPTION
1	J073 2807	1			TANK, Oil Separator ***
2	5303 0086	1			BRACKET, Tank Support
3	5303 0087	1			STRAP, Tank Support
4	5303 0084	1			SPACER, Tank Support
5					BOLT, (Not Serviced)
6	J012 0361	1			NUT
7	1150 0749	1			NUT
8	5303 0397	1			TUBE ASSEMBLY, Oil Separator To Turbo ***
9	5303 0048	1			HOSE,Oil Separator To Tee
10	5303 0049	1			HOSE, Valve Cover To Tee
11	5303 0083	1			TEE
12	5303 0050	1			HOSE, Tee To Block
13	5303 0051	1			HOSE, Oil Separator To Drain Tube
14	3420 2685	2			CLIP, Hose
15	J044 6152	4			WASHER
16	J098 9983	1			SCREW
17					CLIP, (Not Serviced)
18	5300 2214	1			HOSE, Drain Tube Lower
19	6500 182	2			NUT, (M8x1.25)
20	5300 2212	1			TUBE, Drain
21					CLAMP, Hose, (Snap Type)
	J400 7354	AR			17mm-20mm
	J400 6818	AR			23mm-27mm
	J400 6819	AR			25mm-29mm
	J400 6820	AR			28mm-33mm
22					CLAMP, Hose, (Worm Gear)
	3300 0784	AR			.67"-0.98"
	J320 3076	AR			.56"-1.06"
	J320 3077	AR			.81"-1.75"

MODEL CODES:

72=2 DR Wagon
74=4 DR Wagon
77=Open Body 93" Whlbase
78=Open Body 103" Whlbase - Export
T=2WD
J,N=4WD
U=4WD (RHD)

BODY STYLES:

YJ=Wrangler (4X4) "S"
Weangler (4X4) SE
Wrangler (4X4) Sahara
Wrangler (4X4) Renegade
XJ=Cherokee SE
Cherokee Sport
Cherokee Country
ZJ=Grand Cherokee SE
Grand Cherokee Laredo
Grand Cherolee Limited
ZG=Grand Cherokee European
Y1=Wrangler
X1=Cherokee
Z1=Grand Cherokee
KDX=Vehicles

AR = Use as Required - = Non Illustrated Part P.A.R. = Paint as Required

« RETURN TO GROUP INDEX

ENGINE MOUNTING 2.1L DIESEL ENGINE
Figure 9D-1010

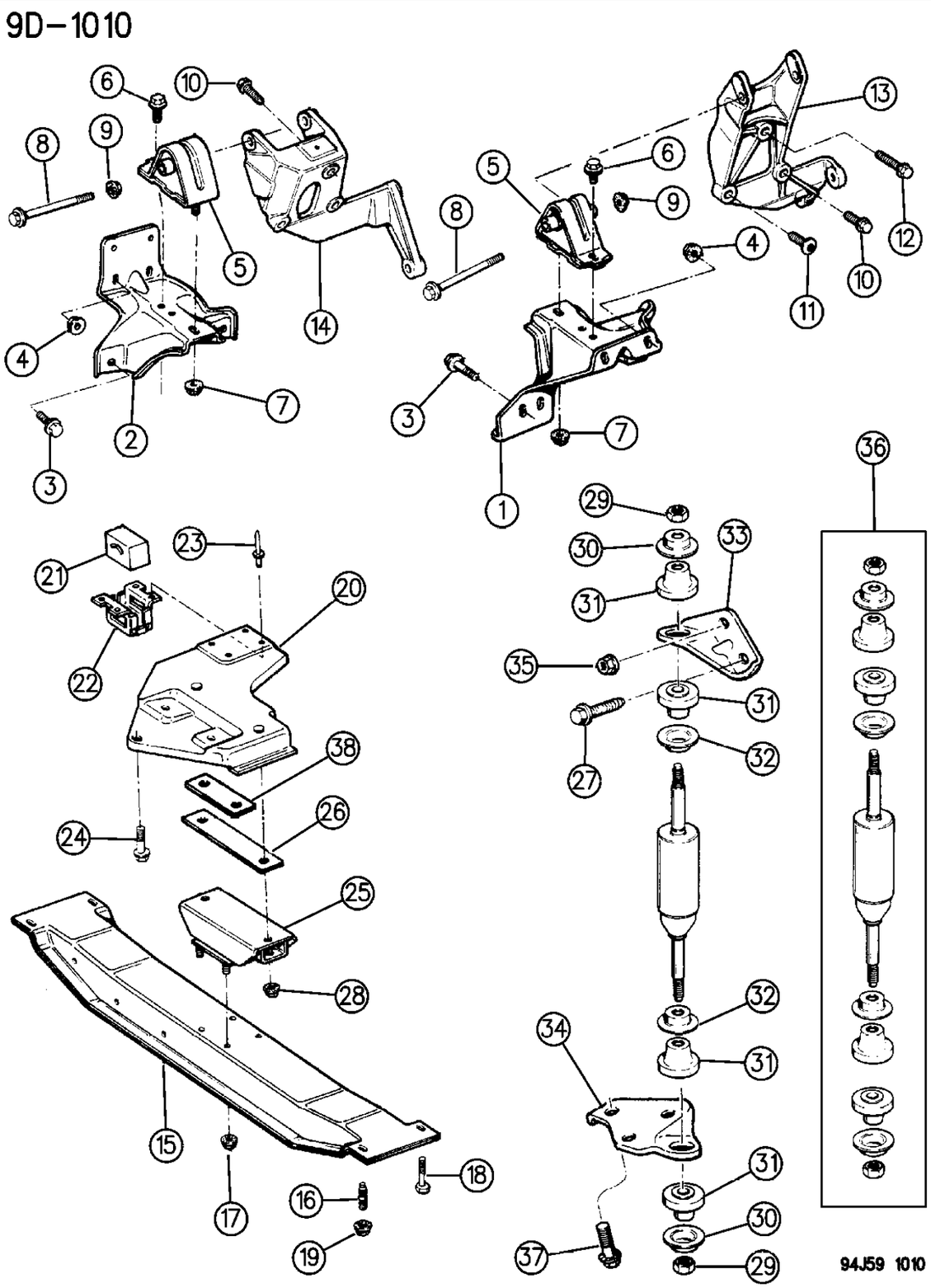

ITEM	PART NUMBER	QTY	BODY	MODEL	DESCRIPTION
1	5200 1497	1			BRACKET, Lt., Cushion to Sill
2	5200 1498	1			BRACKET, Rt., Cushion to Sill
3	1150 2685	4			BOLT
4	3420 1416	4			NUT, (M8x1.25)
5	5200 6726	2			SUPPORT, Cushion Front
6	6502 137	2			BOLT
7	6502 135	2			NUT
8	3420 1959	2			BOLT, (125mm)
9	6502 697	2			NUT
10	1150 4516	4			BOLT
11	3420 2174	1			BOLT, (M10x1.50x35.00)
12	1150 4038	1			BOLT
13	5200 0771	1			BRACKET, Lt., Support Block to Cushion
14	5200 0770	1			BRACKET, Rt., Support Block to Cushion
15	5200 2328	1			CROSSMEMBER, Transmission Support
16	3420 1710	2			STUD
17	3420 1918	4			NUT
18	3420 1540	6			BOLT, (30mm)
19	6502 135	4			NUT
20	5200 3063	1			BRACKET, Transmission Support Rear
21	5300 0101	1			INSULATOR ***
22	5300 0104	1			BRACKET
23	3420 1980	4			RIVET
24	J400 7162	4			BOLT, (1.25mm)
25					CUSHION, Rear Support
	5200 1313	1			2WD, (Blue)
	5200 1180	1			4WD, (Yellow)
26	5200 0956	1			SPACER
27	3420 2047	1			BOLT
28	6502 135	2			NUT, (M10x1.5)
29	J012 0368	2			NUT
30	5200 0819	2			RETAINER, Outer Damper
31	5200 0619	4			BUSHING
32	5200 0820	2			RETAINER, Inner Damper
33	5200 1070	1			BRACKET, Shock Absorber
34	5200 1071	1			BRACKET, Shock Absorber
35	J420 0081	1			NUT
36	8350 0358	1			SHOCK PACKAGE, Engine Damper ***
37					BOLT
	3420 1321	3			(25mm)
	3420 2114	3			(35mm)
	3420 2060	3			(45mm)

MODEL CODES:

72=2 DR Wagon
74=4 DR Wagon
77=Open Body 93" Whlbase
78=Open Body 103" Whlbase - Export
T=2WD
J,N=4WD
U=4WD (RHD)

BODY STYLES:

YJ=Wrangler (4X4) "S"
Weangler (4X4) SE
Wrangler (4X4) Sahara
Wrangler (4X4) Renegade
XJ=Cherokee SE
Cherokee Sport
Cherokee Country
ZJ=Grand Cherokee SE
Grand Cherokee Laredo
Grand Cherolee Limited
ZG=Grand Cherokee European
Y1=Wrangler
X1=Cherokee
Z1=Grand Cherokee
KDX=Vehicles

AR = Use as Required - = Non Illustrated Part P.A.R. = Paint as Required

ENGINE MOUNTING 2.1L DIESEL ENGINE
Figure 9D-1010

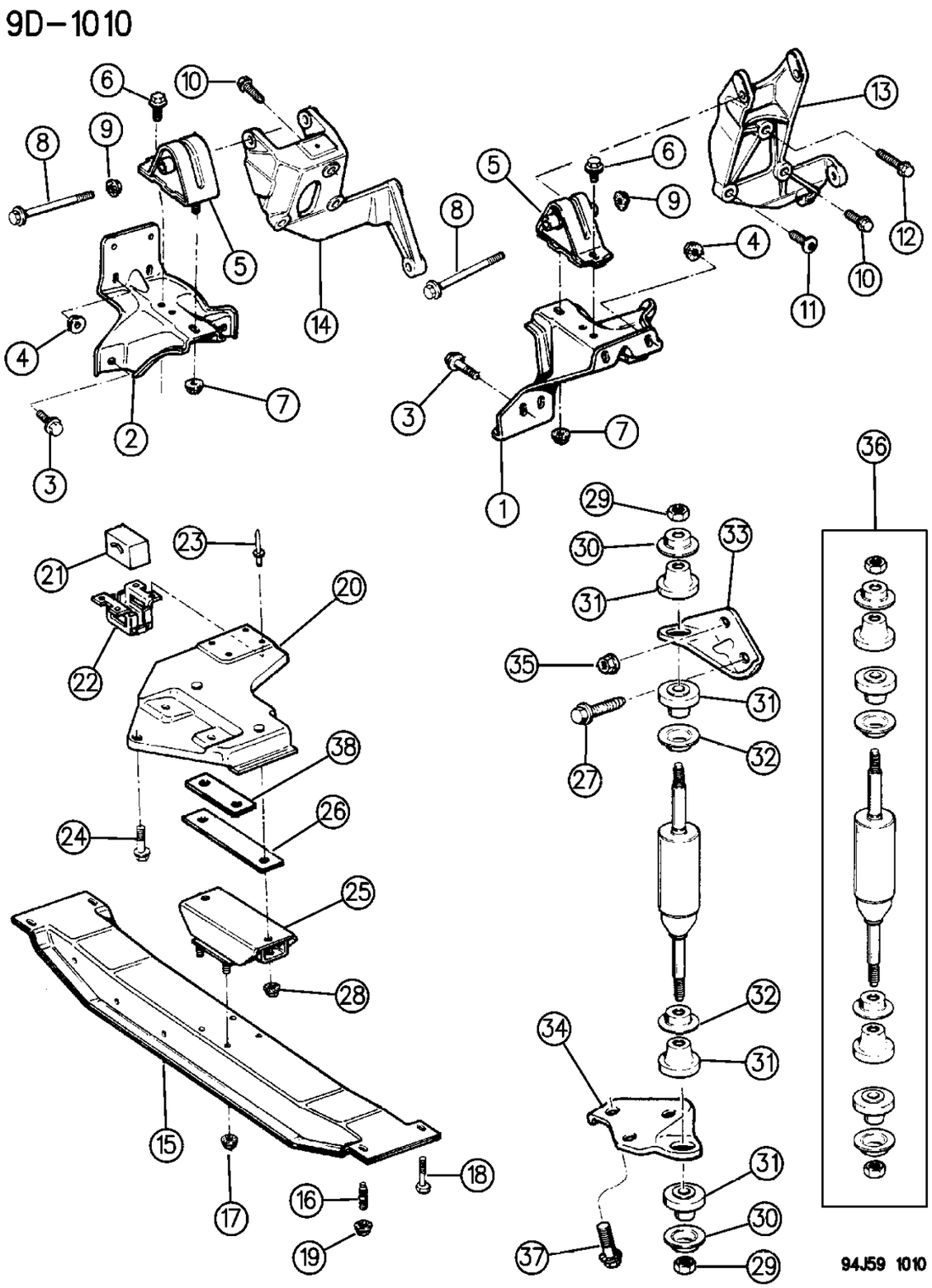

ITEM	PART NUMBER	QTY	BODY	MODEL	DESCRIPTION
38	5200 2933	1			SPACER

MODEL CODES:

72=2 DR Wagon
74=4 DR Wagon
77=Open Body 93" Whlbase
78=Open Body 103" Whlbase - Export
T=2WD
J,N=4WD
U=4WD (RHD)

BODY STYLES:

YJ=Wrangler (4X4) "S"
Weangler (4X4) SE
Wrangler (4X4) Sahara
Wrangler (4X4) Renegade
XJ=Cherokee SE
Cherokee Sport
Cherokee Country
ZJ=Grand Cherokee SE
Grand Cherokee Laredo
Grand Cherolee Limited
ZG=Grand Cherokee European
Y1=Wrangler
X1=Cherokee
Z1=Grand Cherokee
KDX=Vehicles

AR = Use as Required - = Non Illustrated Part P.A.R. = Paint as Required

SAGIPARTS

GROUP-9E
DIESEL ENGINE

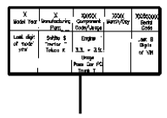

9–100

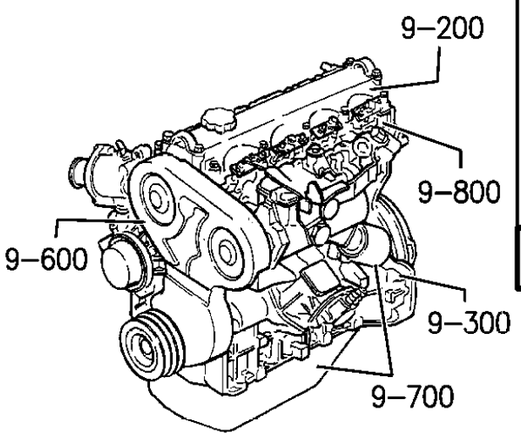

09A	(G) EDA = 2.5L ENGINE 4 CYL. (GAS) TBI
	(H) EPE = 2.5L ENGINE 4 CYL. (GAS) LEADED
	(P) EPE = 2.5L ENGINE 4 CYL. (GAS) UNLEADED
	(F) EPB = 2.5L ENGINE 4 CYL. (GAS) MPI
09B	(S) ERH UNLEADED = 4.0L ENGINE 6 CYL. (GAS) MPI
	(V) ERH LEADED = 4.0L ENGINE 6 CYL. (GAS) MPI
09C	(Y) ELF = 5.2L ENGINE 8 CYL. MPI
09D	(B) ENA = 2.1L ENGINE 4 CYL. DIESEL
09E	(M) ENC = 2.5L ENGINE 4 CYL. DIESEL

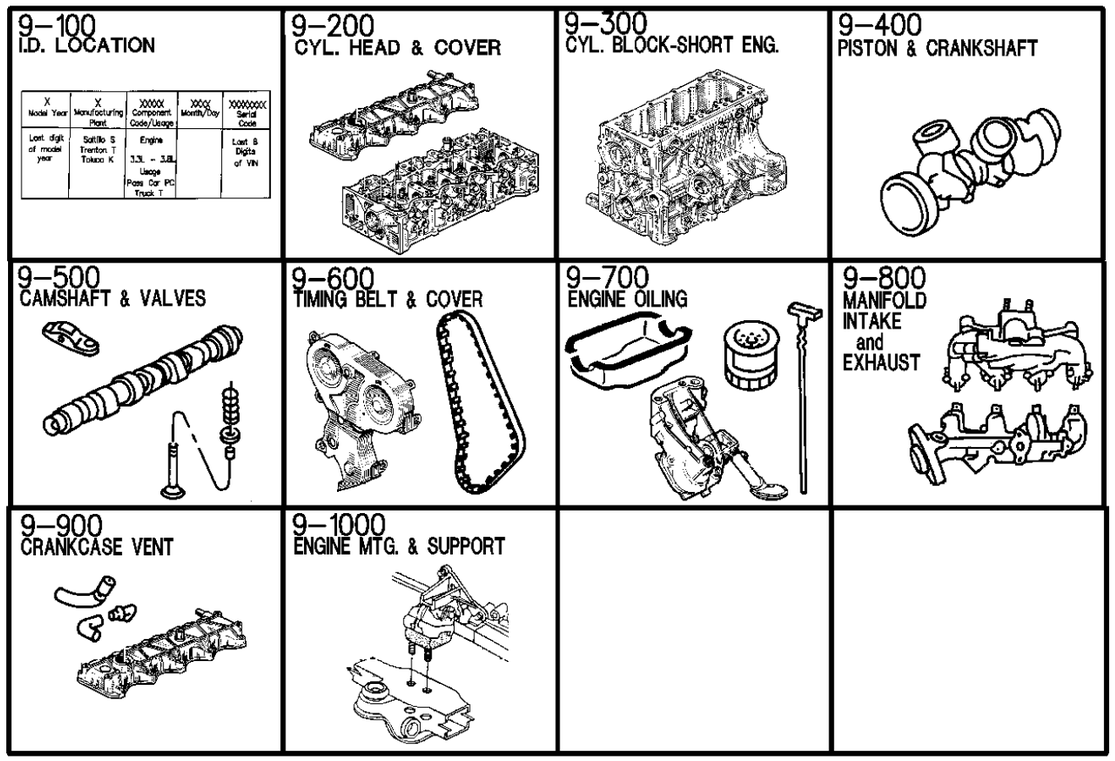

GROUP 9E - ENGINE, 4 CYLINDER DSL

ILLUSTRATION TITLE — **GROUP-FIG. NO.**

I.D. LOCATION
I.D. LOCATION 4.0L ENGINE . . . . . Fig. 9E-110

CYLINDER HEAD
CYLINDER HEAD AND COVER 2.5L DIESEL ENGINE . . . . . Fig. 9E-210

CYLINDER BLOCK
CYLINDER BLOCK AND SUPPORTS 2.5L DIESEL ENGINE . . . . . Fig. 9E-310

CRANKSHAFT AND PISTONS
CRANKSHAFT AND PISTONS 2.5L DIESEL ENGINE . . . . . Fig. 9E-410

CAMSHAFT AND VALVES
CAMSHAFT AND VALVES 2.5L DIESEL ENGINE . . . . . Fig. 9E-510

TIMING GEARS AND CASE
TIMING GEARS AND CASE 2.5L DIESEL ENGINE . . . . . Fig. 9E-610

ENGINE OILING
ENGINE OILING 2.5L DIESEL ENGINE . . . . . Fig. 9E-710
OIL LINES 2.5L DIESEL ENGINE . . . . . Fig. 9E-720

MANIFOLDS
MANIFOLD INTAKE AND EXHAUST 2.5L DIESEL ENGINE . . . . . Fig. 9E-810

CRANKCASE VENTILATION
CRANKCASE VENTILATION 2.5L DIESEL ENGINE . . . . . Fig. 9E-910

ENGINE MOUNTS
ENGINE MOUNTS 2.5L DIESEL ENGINE . . . . . Fig. 9E-1010

I.D. LOCATION 4.0L ENGINE
Figure 9E-110

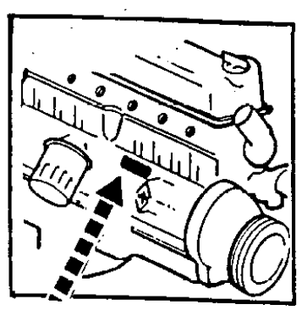

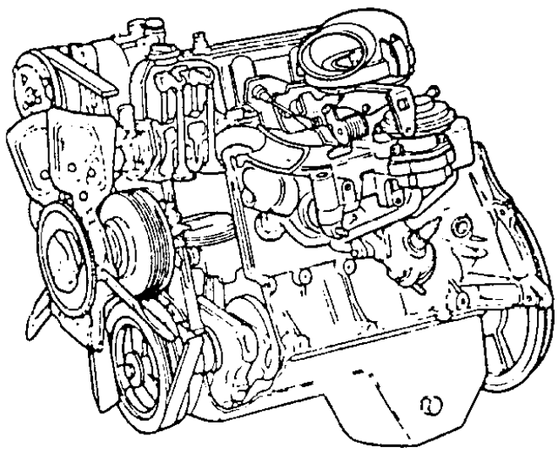

94J60 110

ITEM	PART NUMBER	QTY	BODY	MODEL	DESCRIPTION
1					I.D. LOCATION ***

MODEL CODES:

72=2 DR Wagon	77=Open Body 93" Whlbase	T=2WD	U=4WD (RHD)
74=4 DR Wagon	78=Open Body 103" Whlbase - Export	J,N=4WD	

BODY STYLES:

YJ=Wrangler (4X4) "S"	XJ=Cherokee SE	ZJ=Grand Cherokee SE	Y1=Wrangler
Weangler (4X4) SE	Cherokee Sport	Grand Cherokee Laredo	X1=Cherokee
Wrangler (4X4) Sahara	Cherokee Country	Grand Cherolee Limited	Z1=Grand Cherokee
Wrangler (4X4) Renegade		ZG=Grand Cherokee European	KDX=Vehicles

AR = Use as Required - = Non Illustrated Part P.A.R. = Paint as Required

CYLINDER HEAD AND COVER 2.5L DIESEL ENGINE
Figure 9E-210

9E-210D

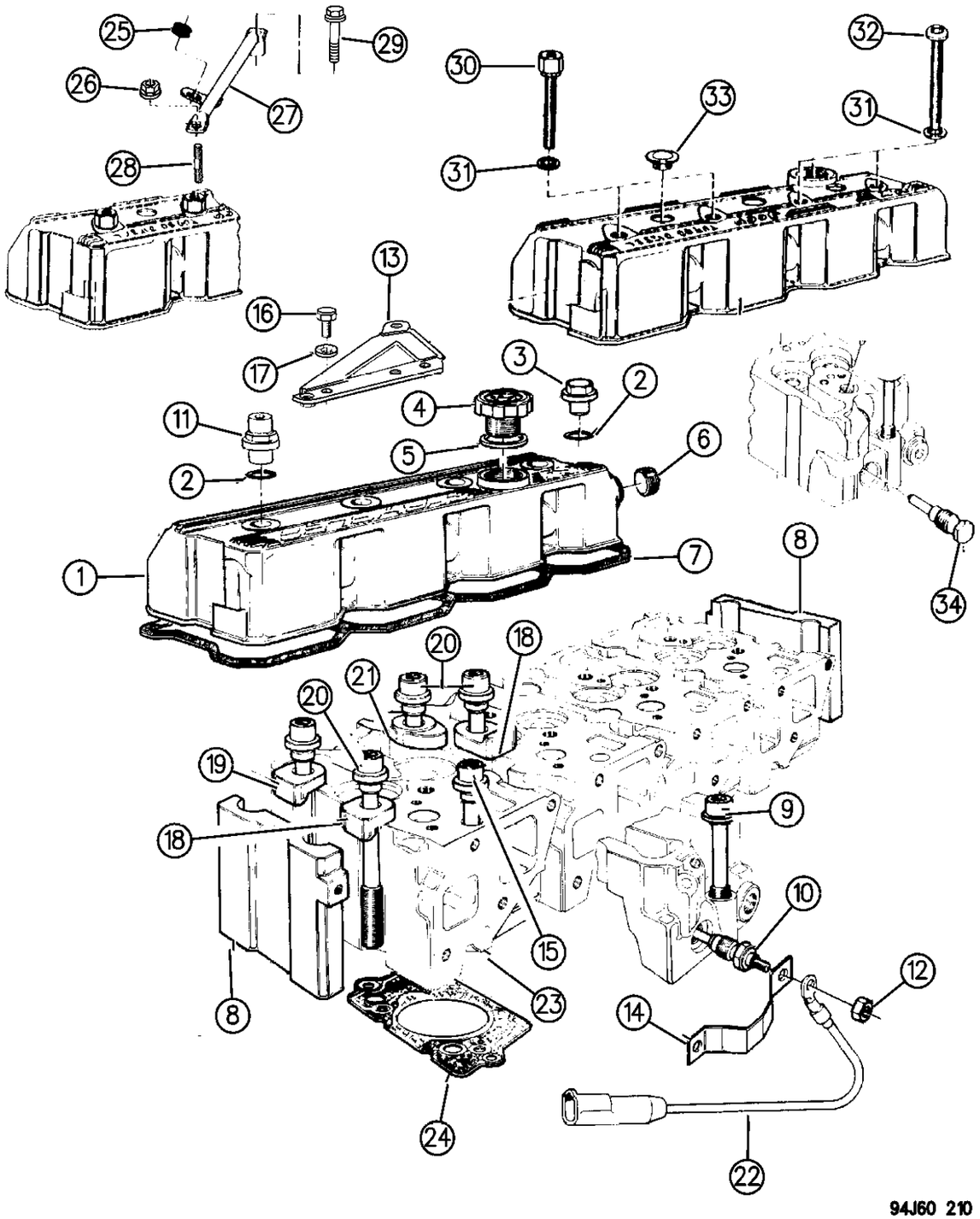

ITEM	PART NUMBER	QTY	BODY	MODEL	DESCRIPTION
1					COVER, Cylinder Head
	4778 924	1		XJ	1995
	4796 099	1		ZG	1995
	4864 747	1		XJ	1996
	4864 556	1		ZG	1996
2	4720 308	4			O-RING, Cover Nut ***
3	4720 302	4			NUT, Cover
4	4720 299	1			CAP ASSEMBLY, Oil Filler ***
5	4720 300	1			GASKET, Oil Filler Cap
6	4723 169	1			PLUG, Cover
7					GASKET, Cover
	4897 250AA	1			1995
	4863 789	1			1996
8					PLATE, Head Fixing Support
	4741 775	2			1995
	4864 553	2		XJ	1996, Up To Serial #35B08123
	4882 407	2		XJ	1996, After Serial #35B08124
	4882 407	2		ZG	1996
9	4720 671	AR			BOLT, Head, Injector Side
10					GLOW PLUG ***
	4720 600	4			1995
	4863 826	4			1996
11	4778 929	3			NUT, Cover
12	4728 176	4			NUT, Conductor
13					STIFFENER, Upper Alternator Bracket ***
	4778 931	1			1995
	4778 931	1		XJ	1996
	4796 101	1		ZG	1996
14	4720 711	1			CONDUCTOR, Glow Plug ***
15	4720 233	4			BOLT, Exhaust Side
16	4797 765	4			BOLT, Stiffener
17	4720 305	4			WASHER, Stiffener
18					CLAMP, Manifold Side Head
	4720 228	5			1995
	4864 038	5			1996
19					CLAMP, Front Head
	4720 229	2			1995
	4864 039	2			1996
20	4720 235	10			BOLT
21					CLAMP, Intermediate Head
	4720 230	3			1995
	4864 040	3			1996

MODEL CODES:

72=2 DR Wagon
74=4 DR Wagon
77=Open Body 93" Whlbase
78=Open Body 103" Whlbase - Export
T=2WD
J,N=4WD
U=4WD (RHD)

BODY STYLES:

YJ=Wrangler (4X4) "S"
Weangler (4X4) SE
Wrangler (4X4) Sahara
Wrangler (4X4) Renegade
XJ=Cherokee SE
Cherokee Sport
Cherokee Country
ZJ=Grand Cherokee SE
Grand Cherokee Laredo
Grand Cherolee Limited
ZG=Grand Cherokee European
Y1=Wrangler
X1=Cherokee
Z1=Grand Cherokee
KDX=Vehicles

AR = Use as Required - = Non Illustrated Part P.A.R. = Paint as Required

CYLINDER HEAD AND COVER 2.5L DIESEL ENGINE
Figure 9E-210

9E-210D

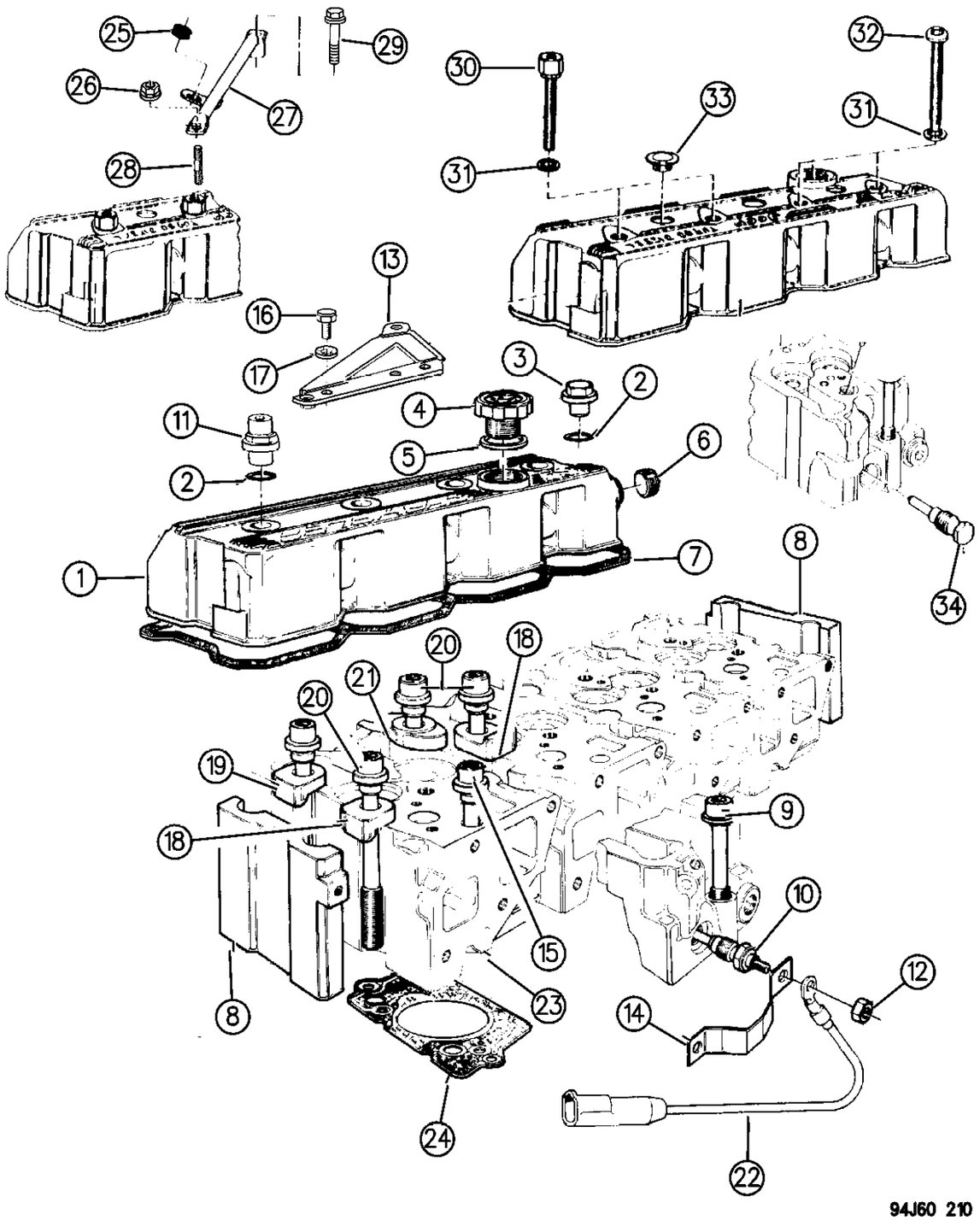

ITEM	PART NUMBER	QTY	BODY	MODEL	DESCRIPTION
22					LEAD, Glow Plug ***
	4778 932	1			1995
	4864 557	1			1996
23					CYLINDER, Head
	4762 186AB	4			1995
	4882 406	1			1996
24					GASKET, Cylinder Head
					1995 ***
	4762 183	1			1.42
	4762 183	1			1.42
	4762 187	1			1.52
					1996 ***
					Up To Serial #35B08123
	4762 183	1		XJ	1.42
	4762 187	1		XJ	1.52
	4762 188	1		XJ	1.62
					After serial #35B08124
	4863 781	1		XJ	1.42
	4863 782	1		XJ	1.52
	4863 783	1		XJ	1.62
					1996 ***
	4863 781	1		ZG	1.42
	4863 782	1		ZG	1.52
	4863 783	1		ZG	1.62
25	4720 362	1			GROMMET, Support Bracket to Dipstick
26	4778 936	1			NUT, Stiffener
27					STIFFENER, Upper Alternator Bracket ***
	4864 746	1			1995
	4864 746	1		XJ	1996
	4864 552	1		ZG	1996
28					STUD, Stiffener
	4864 745	1			1995
	4864 745	1		XJ	1996
	4864 550	1		ZG	1996
29					BOLT
	4864 537	1			1995, (M8x20)
	4864 537	1		XJ	1996, (M8x20)
	4864 551	1		XJ	1996
30	4863 752	2			BOLT, Rocker Cover
31	4864 554	4			SEAL, Rocker Cover Bolt
32	4863 749	2			SCREW, Torx, Rocker Cover
33	4864 555	2			PLUG, Plastic

MODEL CODES:

72=2 DR Wagon
74=4 DR Wagon
77=Open Body 93" Whlbase
78=Open Body 103" Whlbase - Export
T=2WD
J,N=4WD
U=4WD (RHD)

BODY STYLES:

YJ=Wrangler (4X4) "S"
Weangler (4X4) SE
Wrangler (4X4) Sahara
Wrangler (4X4) Renegade

XJ=Cherokee SE
Cherokee Sport
Cherokee Country

ZJ=Grand Cherokee SE
Grand Cherokee Laredo
Grand Cherolee Limited
ZG=Grand Cherokee European

Y1=Wrangler
X1=Cherokee
Z1=Grand Cherokee
KDX=Vehicles

AR = Use as Required - = Non Illustrated Part P.A.R. = Paint as Required

CYLINDER HEAD AND COVER 2.5L DIESEL ENGINE
Figure 9E-210

9E-210D

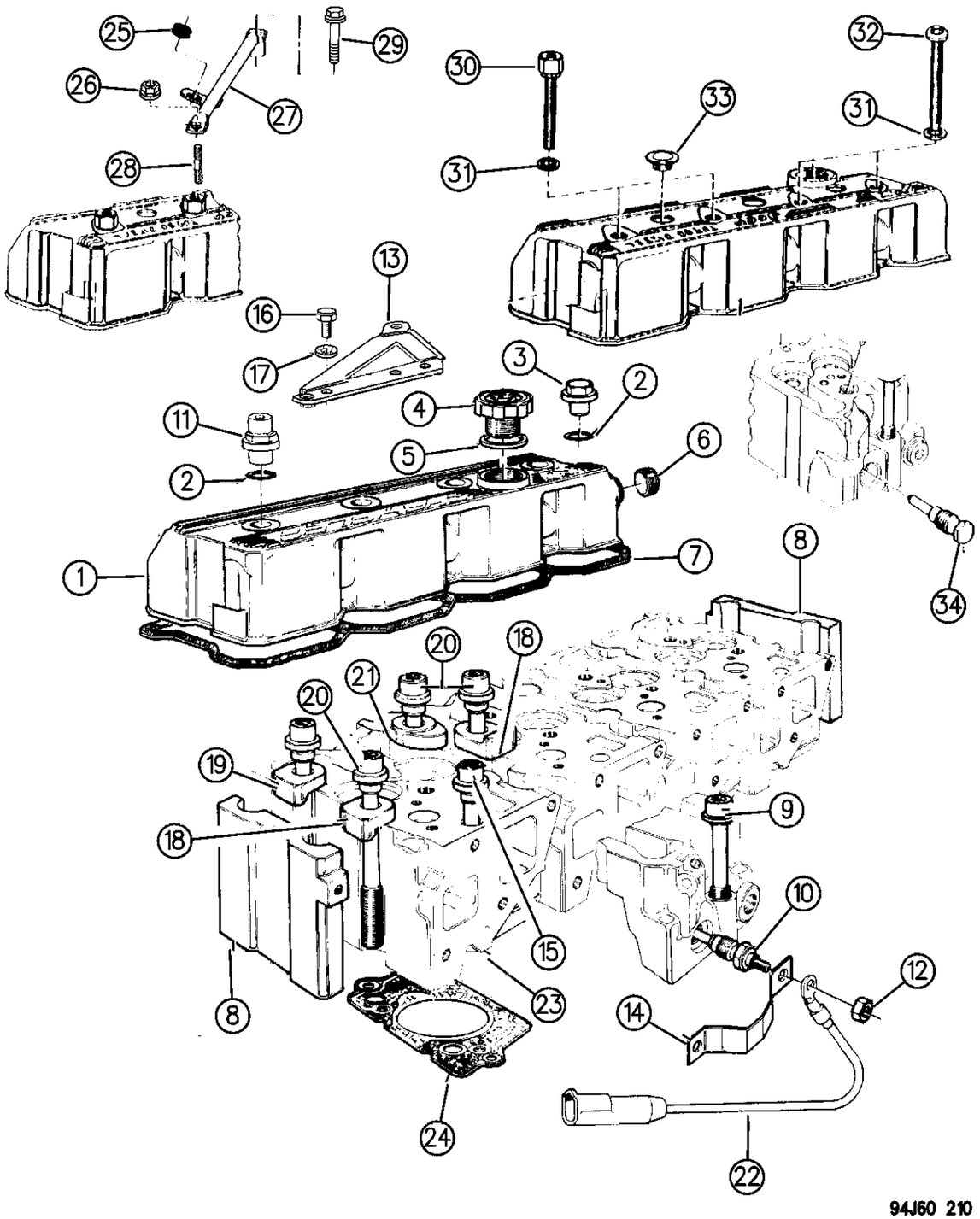

ITEM	PART NUMBER	QTY	BODY	MODEL	DESCRIPTION
34	4863 770	4			PLUG, Dummy

MODEL CODES:

72=2 DR Wagon	77=Open Body 93" Whlbase	T=2WD	U=4WD (RHD)
74=4 DR Wagon	78=Open Body 103" Whlbase - Export	J,N=4WD	

BODY STYLES:

YJ=Wrangler (4X4) "S"	XJ=Cherokee SE	ZJ=Grand Cherokee SE	Y1=Wrangler
Weangler (4X4) SE	Cherokee Sport	Grand Cherokee Laredo	X1=Cherokee
Wrangler (4X4) Sahara	Cherokee Country	Grand Cherolee Limited	Z1=Grand Cherokee
Wrangler (4X4) Renegade		ZG=Grand Cherokee European	KDX=Vehicles

AR = Use as Required - = Non Illustrated Part P.A.R. = Paint as Required

CYLINDER BLOCK AND SUPPORTS 2.5L DIESEL ENGINE
Figure 9E-310

9E-310D

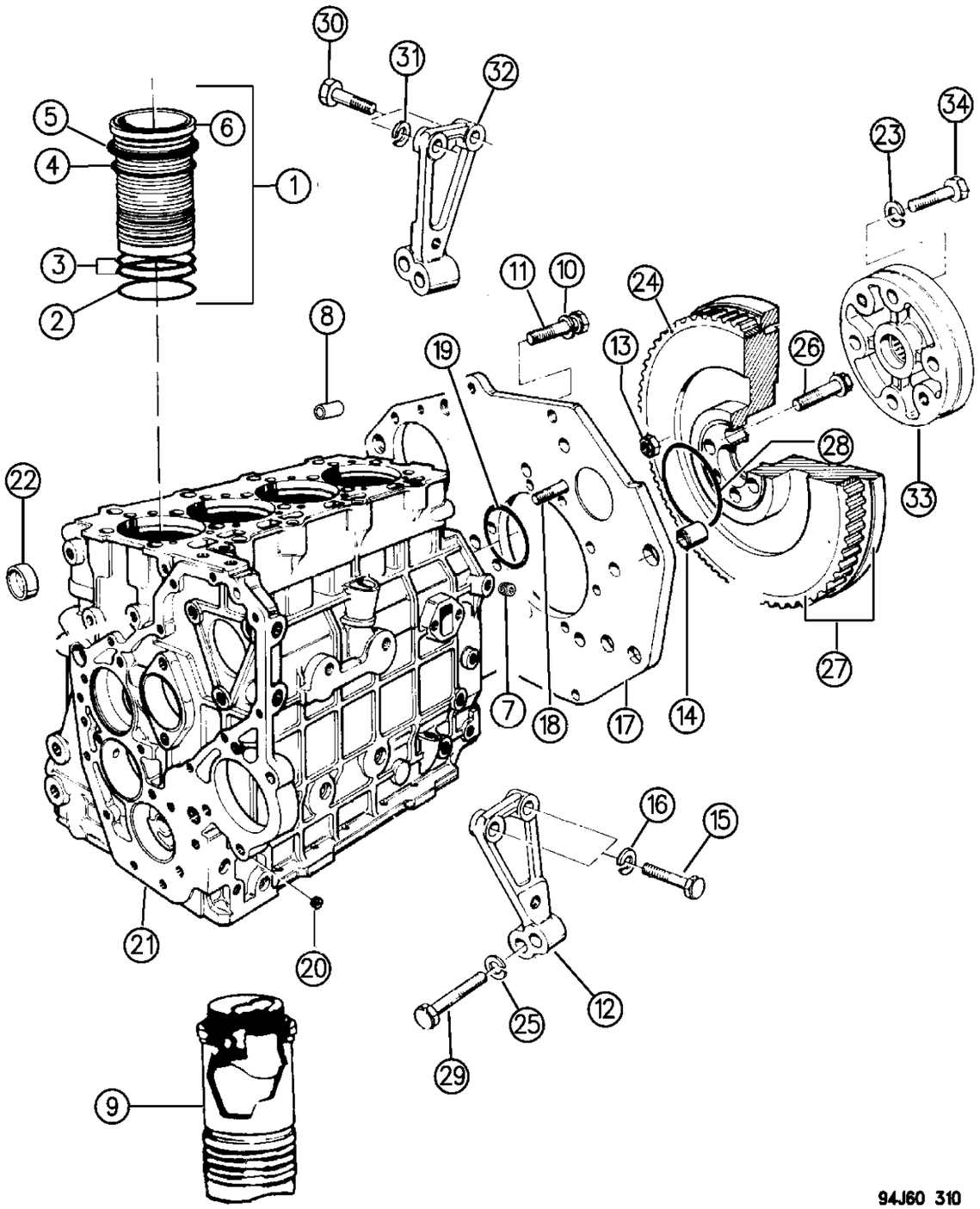

ITEM	PART NUMBER	QTY	BODY	MODEL	DESCRIPTION
					ENGINE, Long Block ***
	4798 732	1		XJ	1995
	4882 029	1		XJ	1996
	4882 032	1		ZG	1996
	4778 921	1			GASKET KIT, Engine Upper ***
1	4723 118	1			SHIM and O-RING PACKAGE, Cylinder Liner ***
2	4720 625	1			O-RING, Cylinder Liner Water ***
3	4720 627	2			O-RING, Cylinder Liner Oil ***
4	4720 626	1			O-Ring, Cylinder Liner Upper ***
5					SHIM, Cylinder Liner ***
	4720 620	1			.15mm
	4720 624	1			.17mm
	4720 621	1			.20mm
	4720 623	1			.23mm
	4720 622	1			.25mm
6	4720 611	4			LINER, Cylinder
7	4723 196	1			PLUG, Blanking, (M8x1)
8	4797 757	1			DOWEL, Location ***
9					LINER ASSEMBLY, w/Piston ***
	4778 804	4			1995
	4864 532	4			1996
10	4741 768	4			WASHER
11	4720 675	AR			BOLT, Adaptor Plate to Block
12	4778 806	1			STIFFENER, Lt., Adapter Plate ***
13	4720 678	AR			NUT, Adaptor Plate
14	4797 758	2			DOWEL, Transmission Adaptor Plate ***
15	4720 712	2			BOLT, Strut Mounting
16	4720 686	2			WASHER, Strut Bolt
17					PLATE, Flywheel Adapter
	4778 807	1		XJ	1995
	4796 098	1		ZG	1995
	4864 533AB	1			1996
18	4720 677	1			STUD, Adaptor Plate
19					O-RING, Adaptor Plate to Block ***
	4720 239	1			1995
	4863 833	1			1996
20	4720 664	AR			PLUG, Cylinder Block
21					BLOCK ASSEMBLY, Engine ***
	4864 189	1		ZG,XJ	1995-97
22	4778 887	AR			PLUG, Core Hole
23	4723 165	4			WASHER, Spring
24					RING GEAR, Flywheel ***

MODEL CODES:

72=2 DR Wagon
74=4 DR Wagon
77=Open Body 93" Whlbase
78=Open Body 103" Whlbase - Export
T=2WD
J,N=4WD
U=4WD (RHD)

BODY STYLES:

YJ=Wrangler (4X4) "S"
Weangler (4X4) SE
Wrangler (4X4) Sahara
Wrangler (4X4) Renegade
XJ=Cherokee SE
Cherokee Sport
Cherokee Country
ZJ=Grand Cherokee SE
Grand Cherokee Laredo
Grand Cherolee Limited
ZG=Grand Cherokee European
Y1=Wrangler
X1=Cherokee
Z1=Grand Cherokee
KDX=Vehicles

AR = Use as Required - = Non Illustrated Part P.A.R. = Paint as Required

CYLINDER BLOCK AND SUPPORTS 2.5L DIESEL ENGINE
Figure 9E-310

9E-310D

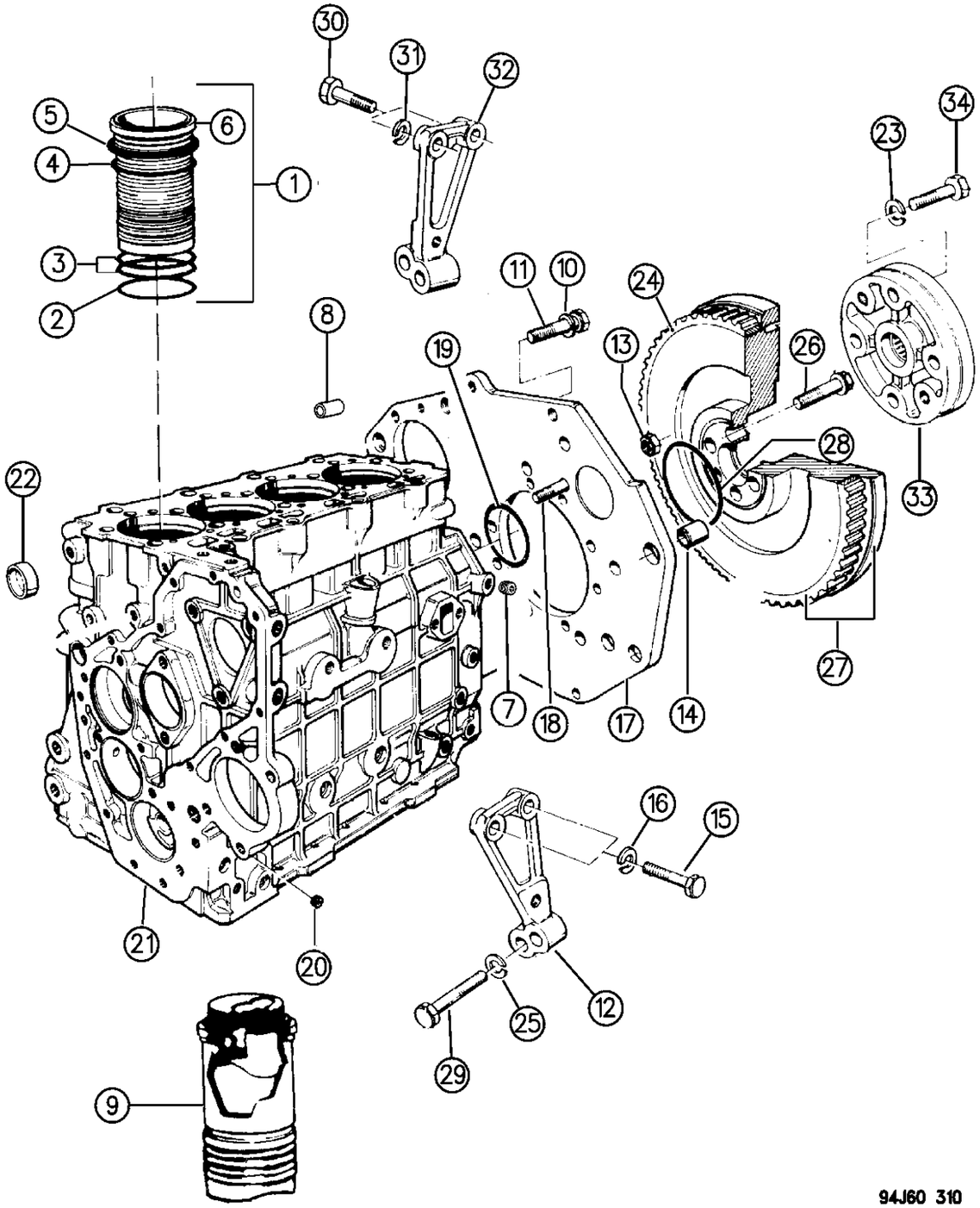

ITEM	PART NUMBER	QTY	BODY	MODEL	DESCRIPTION
	4797 753	1			1995
	4863 870	1			1996
25	4723 272	AR			WASHER, Adapter Plate Bolt
26	4720 232	6			BOLT, Flywheel
27					FLYWHEEL ASSEMBLY ***
	4796 393	1			1995
	4897 251AA	1			1996
28	4720 240	1			O-RING, Flywheel to Crankshaft ***
29	4797 766	4			BOLT, Adapter Plate
30					BOLT, Strut Mounting
	4723 157	2		XJ	
	4864 536	2		ZG	
31	4720 686	2			WASHER, Strut Mounting Bolt
32	4796 394	1			STIFFENER, Rt., Adapter Plate ***
33	4778 808	1			HOUSING ASSEMBLY, Pilot Bearing Support ***
34					BOLT
	4723 199	4			1995, (M8x30)
	4864 534	4			1996, (M8x30)
35	4864 537	1			BOLT, (M8x20), 1996

MODEL CODES:

72=2 DR Wagon
74=4 DR Wagon
77=Open Body 93" Whlbase
78=Open Body 103" Whlbase - Export
T=2WD
J,N=4WD
U=4WD (RHD)

BODY STYLES:

YJ=Wrangler (4X4) "S"
Weangler (4X4) SE
Wrangler (4X4) Sahara
Wrangler (4X4) Renegade

XJ=Cherokee SE
Cherokee Sport
Cherokee Country

ZJ=Grand Cherokee SE
Grand Cherokee Laredo
Grand Cherolee Limited
ZG=Grand Cherokee European

Y1=Wrangler
X1=Cherokee
Z1=Grand Cherokee
KDX=Vehicles

AR = Use as Required - = Non Illustrated Part P.A.R. = Paint as Required

CRANKSHAFT AND PISTONS 2.5L DIESEL ENGINE
Figure 9E-410

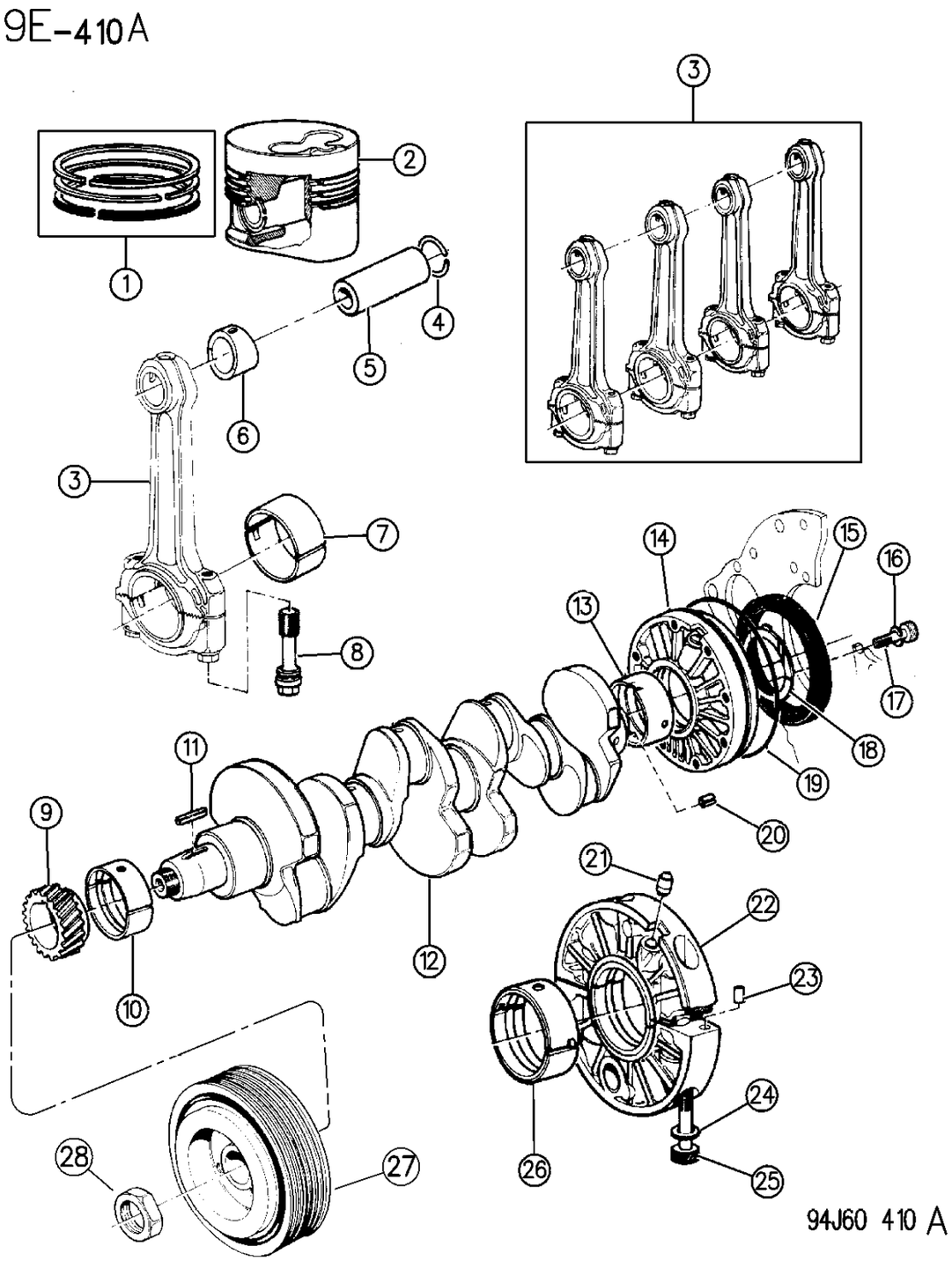

ITEM	PART NUMBER	QTY	BODY	MODEL	DESCRIPTION
1	4720 084	1			RING PACKAGE, Piston ***
2	4864 190	4			PISTON ASSEMBLY, Engine ***
3	4723 122	1			ROD PACKAGE, Connecting ***
4	4720 099	AR			SPRING RING, Piston Pin ***
5	4723 159	4			PIN, Piston
6	4723 160	4			BUSHING, Connecting Rod
7					BEARING PACKAGE, Connecting Rod ***
	4720 877	4			Standard
	4720 882	4			.125mm
	4720 883	4			.250mm
	4720 884	4			.500mm
8	4720 106	8			BOLT, Connecting Rod
9					GEAR, Crankshaft Timing Drive ***
	4720 271	1			1995
	4882 402	1			1996
10					BEARING PACKAGE, Front Main ***
	4720 885	1			Standard
	4720 886	1			.125mm
	4720 887	1			.250mm
11	4720 274	1			KEY, Crankshaft
12					CRANKSHAFT, Engine ***
	4720 244	1			1995
	4720 244	1		XJ	1996
	4864 538	1		ZG	1996
13					BEARING PACKAGE, Rear Main ***
					1995
	4723 119	1			Standard
	4723 120	1			.125mm
	4723 121	1			.250mm
					1996
	4723 119	1		XJ	Standard
	4723 120	1		XJ	.125mm
	4723 121	1		XJ	.250mm
	4864 539	1		ZG	Standard
	4864 540	1		ZG	.125mm
	4864 541	1		ZG	.250mm
14	4720 245	1			HOUSING ASSEMBLY, Rear Bearing ***
15	4720 283	1			OIL SEAL, Crankshaft Rear Support ***
16	4720 285	8			WASHER, Spring Rear Crankshaft Support
17	4720 284	8			SCREW, Rear Crankshaft Support
18					WASHER, Crankshaaft Thrust
					1995

MODEL CODES:

72=2 DR Wagon
74=4 DR Wagon
77=Open Body 93" Whlbase
78=Open Body 103" Whlbase - Export
T=2WD
J,N=4WD
U=4WD (RHD)

BODY STYLES:

YJ=Wrangler (4X4) "S"
Weangler (4X4) SE
Wrangler (4X4) Sahara
Wrangler (4X4) Renegade
XJ=Cherokee SE
Cherokee Sport
Cherokee Country
ZJ=Grand Cherokee SE
Grand Cherokee Laredo
Grand Cherolee Limited
ZG=Grand Cherokee European
Y1=Wrangler
X1=Cherokee
Z1=Grand Cherokee
KDX=Vehicles

AR = Use as Required - = Non Illustrated Part P.A.R. = Paint as Required

CRANKSHAFT AND PISTONS 2.5L DIESEL ENGINE
Figure 9E-410

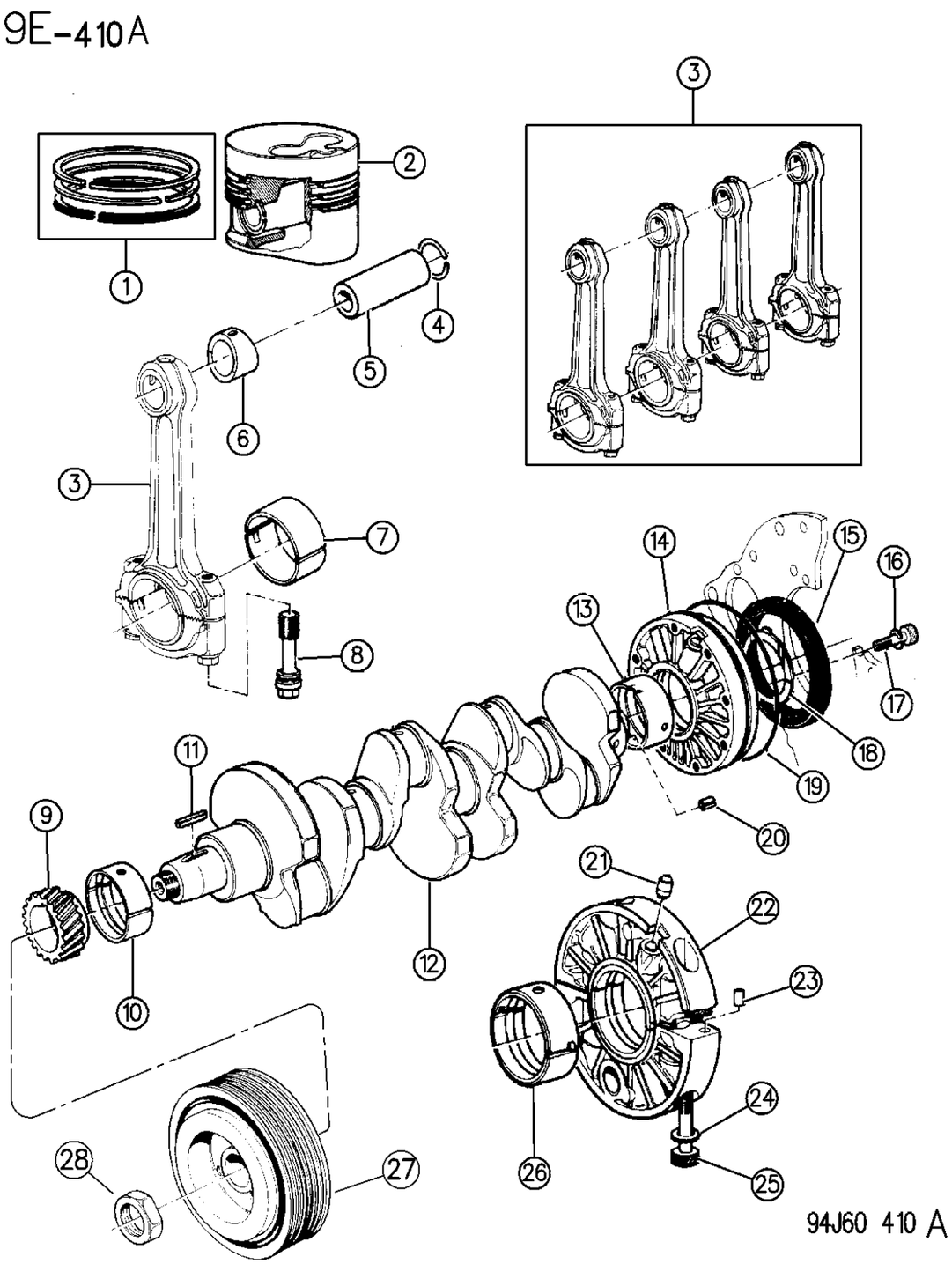

ITEM	PART NUMBER	QTY	BODY	MODEL	DESCRIPTION
	4720 272	1			Standard
	4720 828	1			.10mm
	4720 829	1			.20mm
					1996
	4720 272	1		XJ	Standard
	4720 828	1		XJ	.10mm
	4720 829	1		XJ	.20mm
	4864 046	1		ZG	Standard
	4864 543	1		ZG	.10mm
	4864 544	1		ZG	.20mm
19	4720 277	1			O-RING, Crankshaft Rear Support ***
20	4723 158	1			PIN Crankshaft ***
21	4720 246	1			VALVE, Rear Piston Jet
22	4723 161	1			HOUSING ASSEMBLY, Center Bearing ***
23	4720 241	2			DOWEL, Center Bearing Housing ***
24	4720 243	2			WASHER, Spring Center Bearing Housing
25	4720 242	2			SCREW, Center Bearing Housing
26					BEARING PACKAGE, Center Main ***
	4720 889	1			Standard
	4720 890	1			.125mm
	4720 892	1			.025mm
27	4778 953	1			PULLEY, Crankshaft Damper ***
28	4720 273	1			NUT, Crankshaft Pulley

MODEL CODES:

72=2 DR Wagon
74=4 DR Wagon
77=Open Body 93" Whlbase
78=Open Body 103" Whlbase - Export
T=2WD
J,N=4WD
U=4WD (RHD)

BODY STYLES:

YJ=Wrangler (4X4) "S"
Weangler (4X4) SE
Wrangler (4X4) Sahara
Wrangler (4X4) Renegade
XJ=Cherokee SE
Cherokee Sport
Cherokee Country
ZJ=Grand Cherokee SE
Grand Cherokee Laredo
Grand Cherolee Limited
ZG=Grand Cherokee European
Y1=Wrangler
X1=Cherokee
Z1=Grand Cherokee
KDX=Vehicles

AR = Use as Required - = Non Illustrated Part P.A.R. = Paint as Required

CAMSHAFT AND VALVES 2.5L DIESEL ENGINE
Figure 9E-510

9E-510B

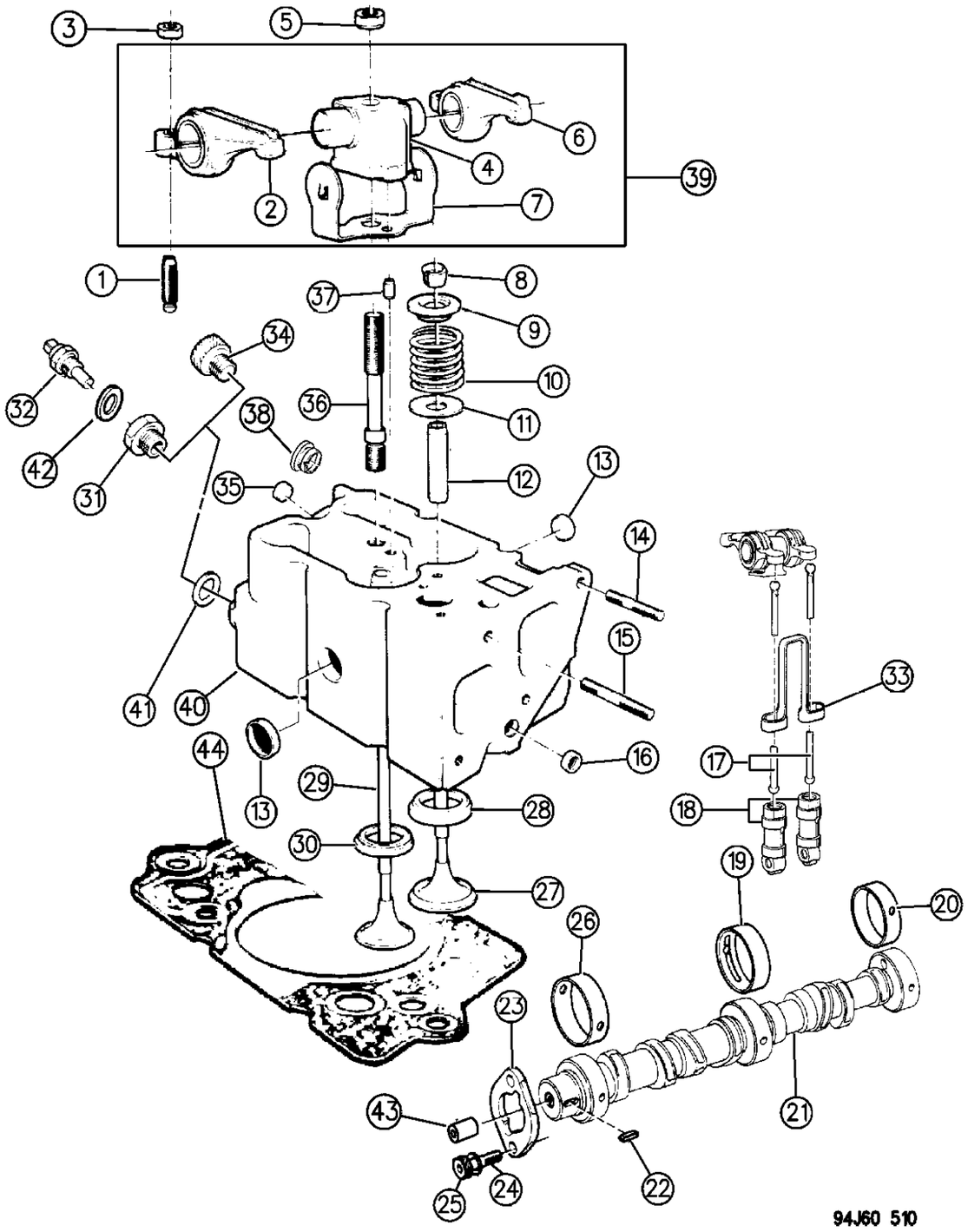

ITEM	PART NUMBER	QTY	BODY	MODEL	DESCRIPTION
1	4720 161	8			SCREW, Valve Adjustment
2	4797 749	4			ROCKER, Exhaust ***
3	4720 162	8			NUT, Valve Adjustment
4	4723 243	4			SHAFT, Rocker Support
5					NUT, Rocker Support
	4720 164	8			1995
	4863 823	8			1996
6					ROCKER, Inlet ***
	4797 750	4			1995
	4863 859	4			1996
7					SPRING PLATE, Rocker Retaining ***
	4720 163	4			1995
	4863 861	4			1996
8	4720 155	7			LOCK, Valve
9	4720 152	8			RETAINER, Valve Spring Upper
10					SPRING, Valve
	4720 158	4			1995
	4863 860	4			1996
11	4720 153	8			WASHER, Valve Spring Lower
12					GUIDE, Valve Stem
	4723 239	8			Standard
	4723 240	AR			.10mm
13	4723 228	AR			PLUG, Cylinder Head
14	4723 241	2			STUD, Cylinder Head
15	4882 405	2			STUD, Cylinder Head
16	4723 210	2			PLUG, Cylinder Head
17	4773 834	8			ROD, Push, (Tube Type)
18	4773 712	8			LIFTER, Cam ***
19	4720 220	1			BEARING, Camshaft Center
20	4720 219	1			BEARING, Camshaft Rear
21					CAMSHAFT ***
	4773 697	1			1995
	4882 399	1			1996
22	4720 137	1			KEY, Camshaft
23	4723 163	1			PLATE, Camshaft
24	4723 165	AR			WASHER
25	4720 135	AR			BOLT, (M8x18)
26	4720 218	1			BEARING, Camshaft Front
27	4720 146	4			VALVE, Intake
28	4723 245	4			SEAT, Intake Valve, (.30 O/S) ***
29	4720 148	4			VALVE, Exhaust
30	4723 244	4			SEAT, Exhaust Valve, (.30 O/S) ***

MODEL CODES:

72=2 DR Wagon
74=4 DR Wagon
77=Open Body 93" Whlbase
78=Open Body 103" Whlbase - Export
T=2WD
J,N=4WD
U=4WD (RHD)

BODY STYLES:

YJ=Wrangler (4X4) "S"
Weangler (4X4) SE
Wrangler (4X4) Sahara
Wrangler (4X4) Renegade
XJ=Cherokee SE
Cherokee Sport
Cherokee Country
ZJ=Grand Cherokee SE
Grand Cherokee Laredo
Grand Cherolee Limited
ZG=Grand Cherokee European
Y1=Wrangler
X1=Cherokee
Z1=Grand Cherokee
KDX=Vehicles

AR = Use as Required - = Non Illustrated Part P.A.R. = Paint as Required

CAMSHAFT AND VALVES 2.5L DIESEL ENGINE
Figure 9E-510

9E-510B

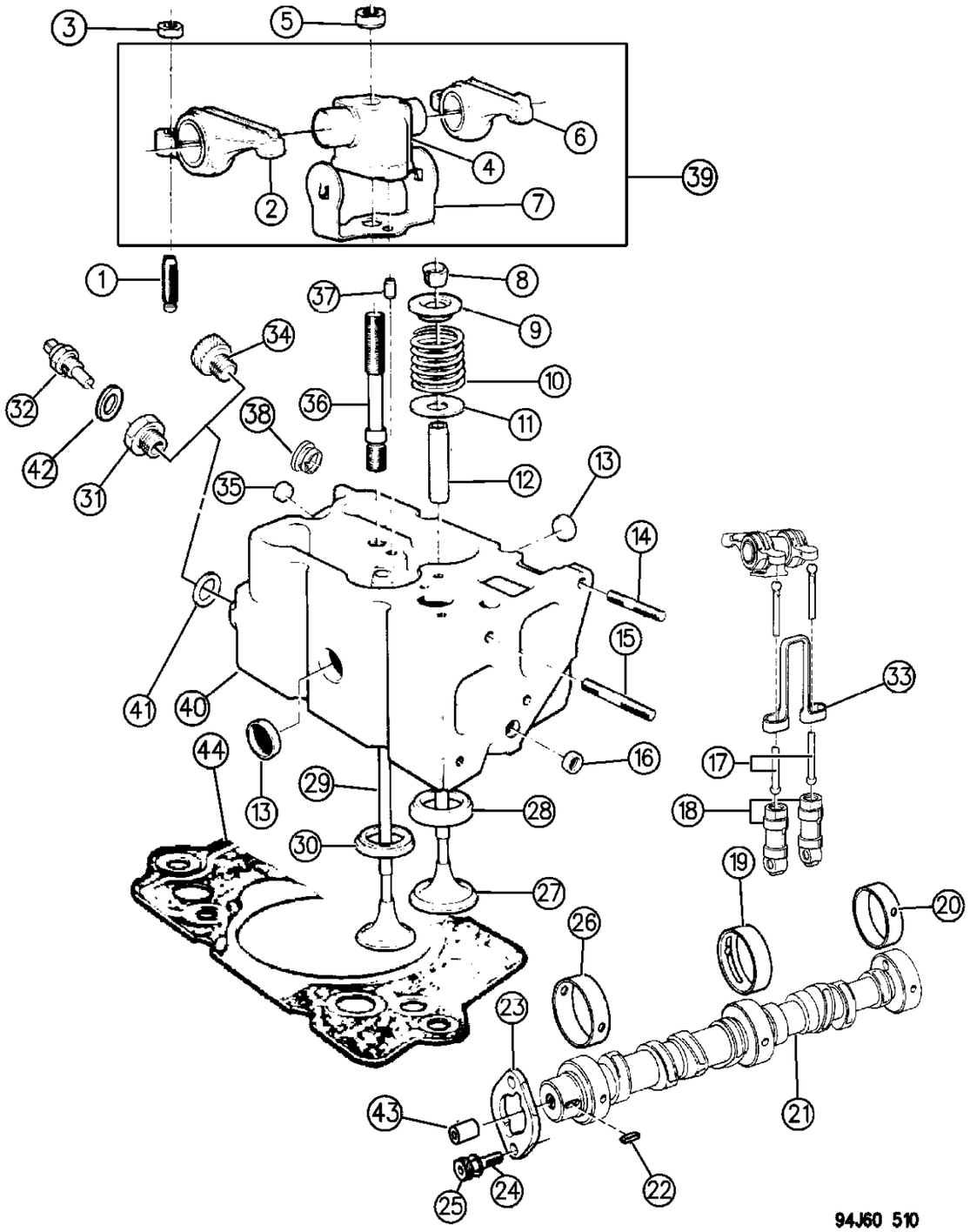

ITEM	PART NUMBER	QTY	BODY	MODEL	DESCRIPTION
31	4720 581	1			ADAPTOR, Water Temperature Sensor ***
32	4720 598	1			SENSOR, Water Temperature
33	4773 701	1			BRACKET, Anti-Vibration
34	4720 159	1			PLUG, Cylinder Head, (M20x1.5)
35	4723 237	1			PLUG, Cylinder Head Core
36					STUD, Rocker Support
	4723 238	4			1995
	4882 404	4			1996
37	4720 165	4			DOWEL, Rocker Support ***
38					HOT PLUG, Pre-Cumbustion Chamber ***
	4723 234	4			1995
	4863 769	4			1996
39					SHAFT PACKAGE, Rocker Support ***
	4778 845	4			1995
	4864 548	4			1996
40					HEAD, Cylinder ***
	4762 186AB	4			1995
	4882 406	4			1996
41	4723 246	1			WASHER, Transmitter Water Temperature
42	4720 703	1			WASHER
43	4723 196	2			PLUG, Blanking, w/Sealant
44					GASKET, Cylinder Head
	4762 183	1			1.42
	4762 187	1			1.52
	4762 188	1			1.62

MODEL CODES:

72=2 DR Wagon
74=4 DR Wagon
77=Open Body 93" Whlbase
78=Open Body 103" Whlbase - Export
T=2WD
J,N=4WD
U=4WD (RHD)

BODY STYLES:

YJ=Wrangler (4X4) "S"
Weangler (4X4) SE
Wrangler (4X4) Sahara
Wrangler (4X4) Renegade
XJ=Cherokee SE
Cherokee Sport
Cherokee Country
ZJ=Grand Cherokee SE
Grand Cherokee Laredo
Grand Cherolee Limited
ZG=Grand Cherokee European
Y1=Wrangler
X1=Cherokee
Z1=Grand Cherokee
KDX=Vehicles

AR = Use as Required - = Non Illustrated Part P.A.R. = Paint as Required

TIMING GEARS AND CASE 2.5L DIESEL ENGINE
Figure 9E-610

9E-610

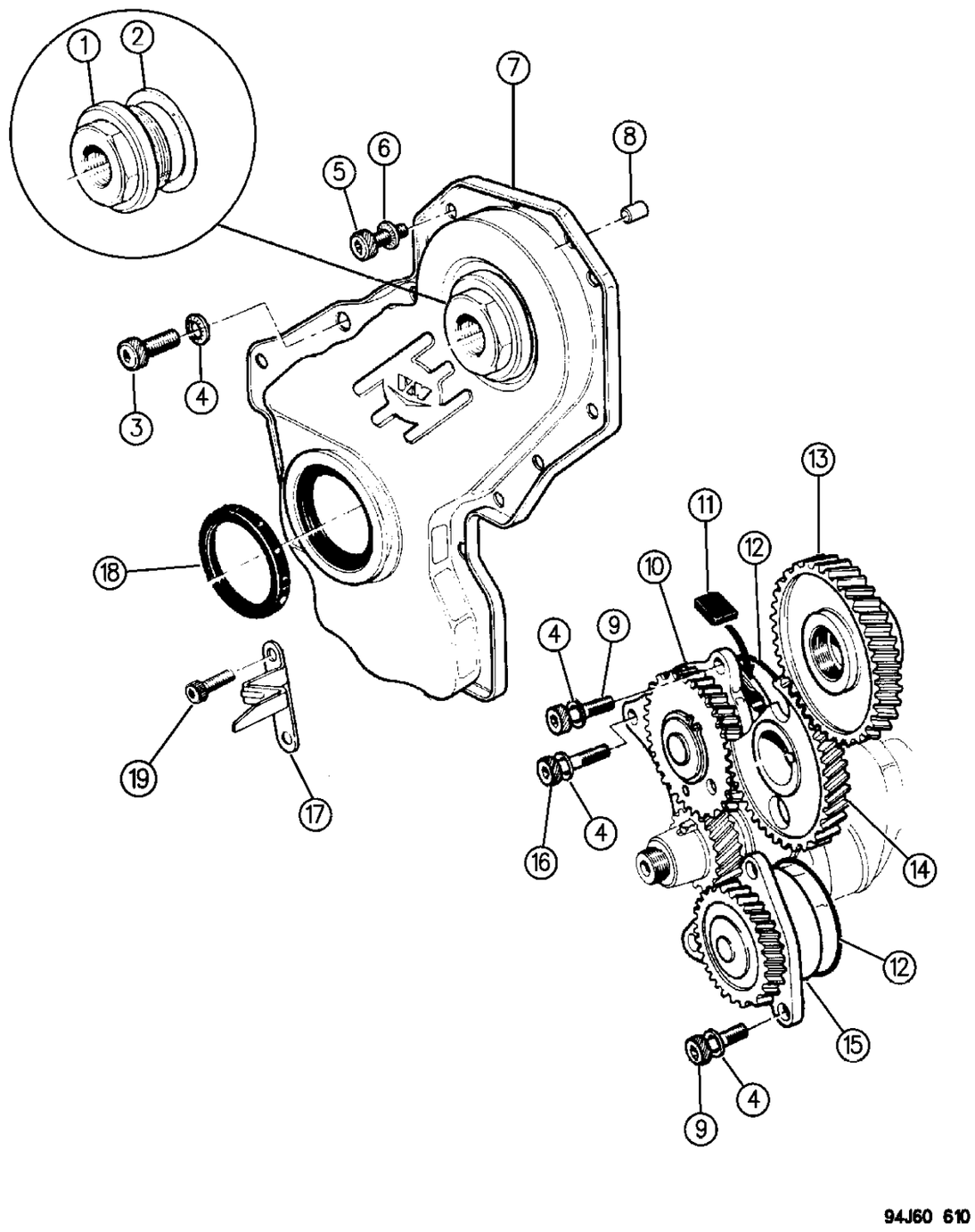

ITEM	PART NUMBER	QTY	BODY	MODEL	DESCRIPTION
1	4778 951	1			COVER, Front Timing
2	4720 290	1			GASKET, Front Timing Cover
3					SCREW, Timing Cover
	4720 696	2			1995
	4864 559	2			1996
4	4720 565	AR			WASHER
5					SCREW, Timing Cover
	4720 695	16			1995
	4864 550	13			1996
6	4720 305	16			WASHER
7					COVER, Timing
	4864 750	1			1995
	4864 750	1		XJ	1996
	4864 561	1		ZG	1996
8	4798 312	2			DOWEL, Timing Cover ***
9	4720 135	AR			BOLT
10	4762 782	1			PUMP, Vacuum
11	4723 231	1			INSERT, Vacuum Pump Rotor
12	4720 239	AR			O-RING, Adapter Plate to Block ***
13	4882 412	1			GEAR, Injection Pump ***
14					GEAR, Camshaft Drive ***
	4723 232	1			1995
	4882 403	1		XJ	1996
	4723 232	1		ZG	1996
15	4723 233	1			PUMP, Engine Oil
16	4720 136	AR			BOLT
17					INDICATOR, Timing ***
	4778 952	1			1995
	4864 562	1			1996
18	4720 291	1			SEAL, Timing Cover
19					BOLT, (Not Serviced)

MODEL CODES:

72=2 DR Wagon
74=4 DR Wagon
77=Open Body 93" Whlbase
78=Open Body 103" Whlbase - Export
T=2WD
J,N=4WD
U=4WD (RHD)

BODY STYLES:

YJ=Wrangler (4X4) "S"
Weangler (4X4) SE
Wrangler (4X4) Sahara
Wrangler (4X4) Renegade

XJ=Cherokee SE
Cherokee Sport
Cherokee Country

ZJ=Grand Cherokee SE
Grand Cherokee Laredo
Grand Cherolee Limited
ZG=Grand Cherokee European

Y1=Wrangler
X1=Cherokee
Z1=Grand Cherokee
KDX=Vehicles

AR = Use as Required - = Non Illustrated Part P.A.R. = Paint as Required

« RETURN TO GROUP INDEX

ENGINE OILING 2.5L DIESEL ENGINE
Figure 9E-710

9E-710D

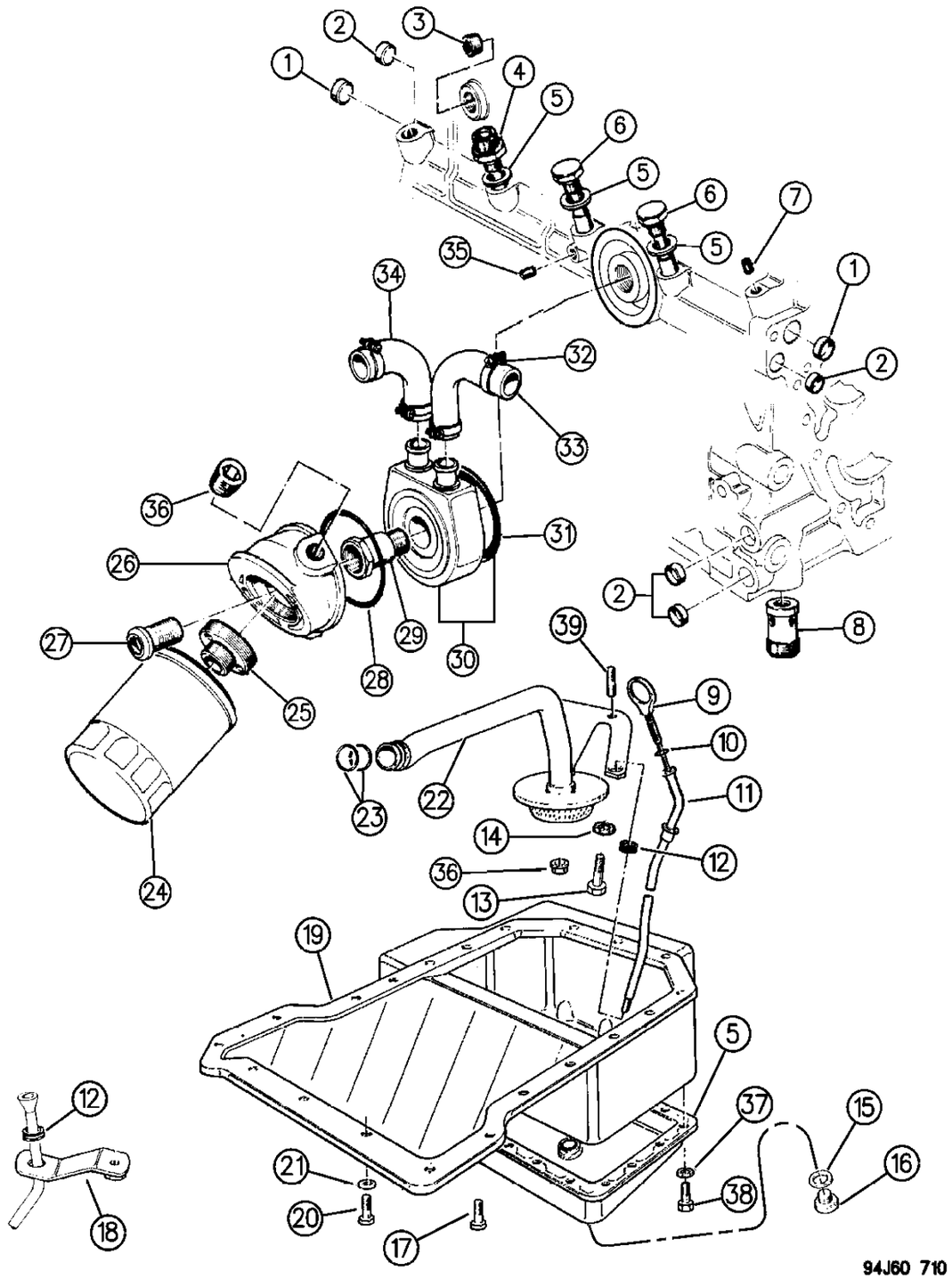

ITEM	PART NUMBER	QTY	BODY	MODEL	DESCRIPTION
1	4723 211	AR			PLUG, Block Core Hole
2	4723 210	AR			PLUG, Block Core Hole
3	4778 986	1			PLUG, Intake Manifold
4	4720 726	1			BOLT, Adapter Oil Feed To Turbo
5	4778 933	1			COVER, Oil Sump
6	4720 709	2			BOLT, Adapter
7	4720 663	AR			PLUG
8	4720 217	1			VALVE, Oil Pressure
9	4778 947	1			INDICATOR, Oil Level ***
10	4720 373	1			O-RING, Oil Indicator ***
11					TUBE, Oil Indicator
	4778 941	1			1995
	4882 408	1			1996
12	4720 362	1			GASKET, Indicator Tube
13					BOLT, Suction Pipe Adapter
	4778 991	1			1995
	4864 748	1		XJ	1996, (M6x12)
	4864 550	1		ZG	1996
14	4720 305	1			WASHER, Suction Pipe Adapter
15	4720 353	1			WASHER, Oil Drain Plug
16	4720 352	1			PLUG, Oil Drain
17					SCREW, Oil Sump
	4723 171	4			1995, (M6x14)
	4864 748	4			1996, (M6x12)
18	4778 948	1			BRACKET, Indicator Tube
19	4778 935	1			SUMP, Oil ***
20					BOLT, Oil Sump
	4778 934	22			1995
	4864 749	21			1996, (M6x20)
21	4720 305	22			WASHER, Oil Sump
22	4778 937	1			PIPE, Oil Suction ***
23	4720 374	2			O-RING, Oil Suction Pipe ***
24					FILTER, Engine Oil
	4778 838	1		XJ	
	4796 174	1		ZG	
25	4797 610	1			ADAPTER, Oil Filter
26	4723 212	1			BASE, Oil Filter
27	4778 990	1			ADAPTER, Oil Filter Base To Cooler
28	4720 375	1			O-RING, Oil Filter Base To Cooler ***
29	4882 410	1			CONNECTOR, Oil Filter Base
30	4720 366	1			COOLER, Engine Oil ***
31	4723 217	1			O-RING, Oil Cooler ***

MODEL CODES:

72=2 DR Wagon
74=4 DR Wagon
77=Open Body 93" Whlbase
78=Open Body 103" Whlbase - Export
T=2WD
J,N=4WD
U=4WD (RHD)

BODY STYLES:

YJ=Wrangler (4X4) "S"
Weangler (4X4) SE
Wrangler (4X4) Sahara
Wrangler (4X4) Renegade
XJ=Cherokee SE
Cherokee Sport
Cherokee Country
ZJ=Grand Cherokee SE
Grand Cherokee Laredo
Grand Cherolee Limited
ZG=Grand Cherokee European
Y1=Wrangler
X1=Cherokee
Z1=Grand Cherokee
KDX=Vehicles

AR = Use as Required - = Non Illustrated Part P.A.R. = Paint as Required

ENGINE OILING 2.5L DIESEL ENGINE
Figure 9E-710

9E-710D

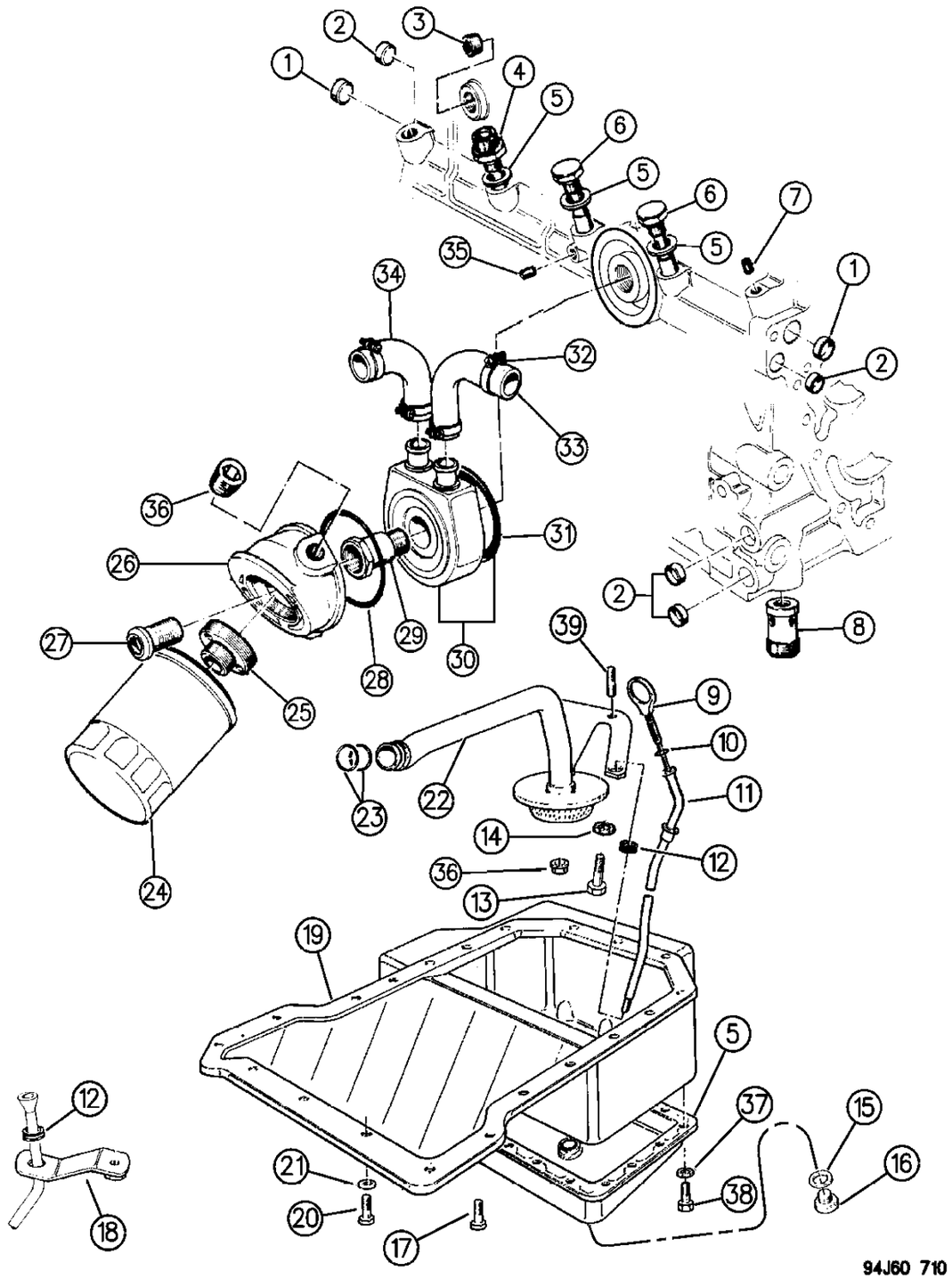

ITEM	PART NUMBER	QTY	BODY	MODEL	DESCRIPTION
32	4720 694	AR			CLAMP
33					HOSE, Engine Oil Cooler, Return
	4778 987	1		XJ	
	4778 987	1		ZG	1995
	4864 578	1		ZG	1996
34	4778 988	1			HOSE, Engine Oil Cooler, Feed
35	4720 663	1			PLUG
36	4778 936	1		ZG	NUT, Suction Pipe
37	4723 223	16			WASHER, Oil Sump Cover
38					BOLT, Oil Sump Cover
	4723 164	16			1995
	4864 559	17			1996
39	4720 657	1		ZG	STUD, Suction Pipe

MODEL CODES:

72=2 DR Wagon
74=4 DR Wagon
77=Open Body 93" Whlbase
78=Open Body 103" Whlbase - Export
T=2WD
J,N=4WD
U=4WD (RHD)

BODY STYLES:

YJ=Wrangler (4X4) "S"
Weangler (4X4) SE
Wrangler (4X4) Sahara
Wrangler (4X4) Renegade
XJ=Cherokee SE
Cherokee Sport
Cherokee Country
ZJ=Grand Cherokee SE
Grand Cherokee Laredo
Grand Cherolee Limited
ZG=Grand Cherokee European
Y1=Wrangler
X1=Cherokee
Z1=Grand Cherokee
KDX=Vehicles

AR = Use as Required - = Non Illustrated Part P.A.R. = Paint as Required

OIL LINES 2.5L DIESEL ENGINE
Figure 9E-720

9E-720B

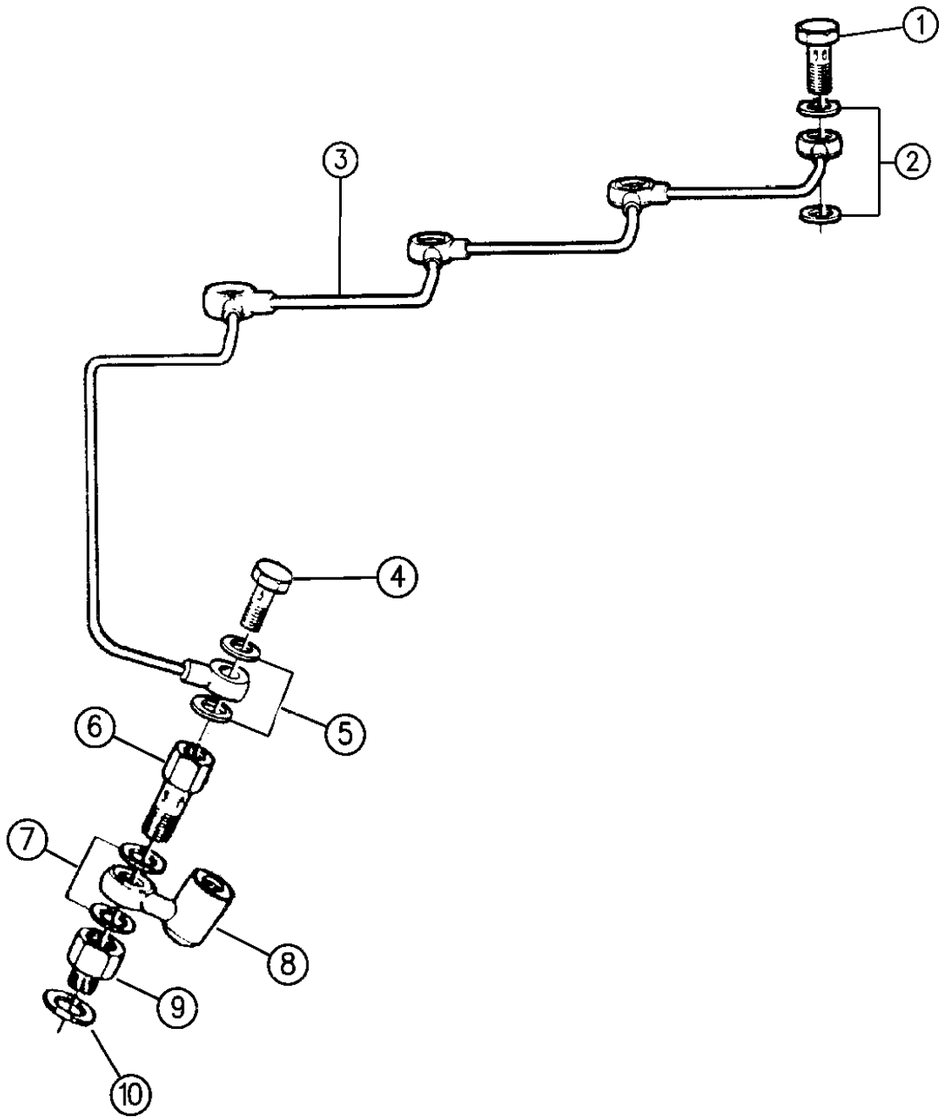

94J60 720

ITEM	PART NUMBER	QTY	BODY	MODEL	DESCRIPTION
1	4720 358	AR			BOLT, Banjo
2	4720 554	AR			WASHER
3	4778 930	1			PIPE, Rocker Oil Feed ***
4	4762 717	1			BOLT, Banjo, (M10x1)
5	4720 713	2			WASHER, (10.2x13.9x1)
6	4773 708	1			BOLT, Banjo, Special
7	4720 703	2			WASHER, (12.2x15.9x1.5)
8					CONNECTOR, Banjo, Oil Pressure Transducer
	4778 925	1			1995
	4864 744	1		XJ	1996
	4741 815	1		ZG	1996
9	4778 928	1			ADAPTER, Oil Pressure Transducer
10	4720 704	1			WASHER, (14.2x17.9x1.5)

MODEL CODES:

72=2 DR Wagon
74=4 DR Wagon
77=Open Body 93" Whlbase
78=Open Body 103" Whlbase - Export
T=2WD
J,N=4WD
U=4WD (RHD)

BODY STYLES:

YJ=Wrangler (4X4) "S"
Weangler (4X4) SE
Wrangler (4X4) Sahara
Wrangler (4X4) Renegade
XJ=Cherokee SE
Cherokee Sport
Cherokee Country
ZJ=Grand Cherokee SE
Grand Cherokee Laredo
Grand Cherolee Limited
ZG=Grand Cherokee European
Y1=Wrangler
X1=Cherokee
Z1=Grand Cherokee
KDX=Vehicles

AR = Use as Required - = Non Illustrated Part P.A.R. = Paint as Required

« RETURN TO GROUP INDEX

MANIFOLD INTAKE AND EXHAUST 2.5L DIESEL ENGINE
Figure 9E-810

9E-810D

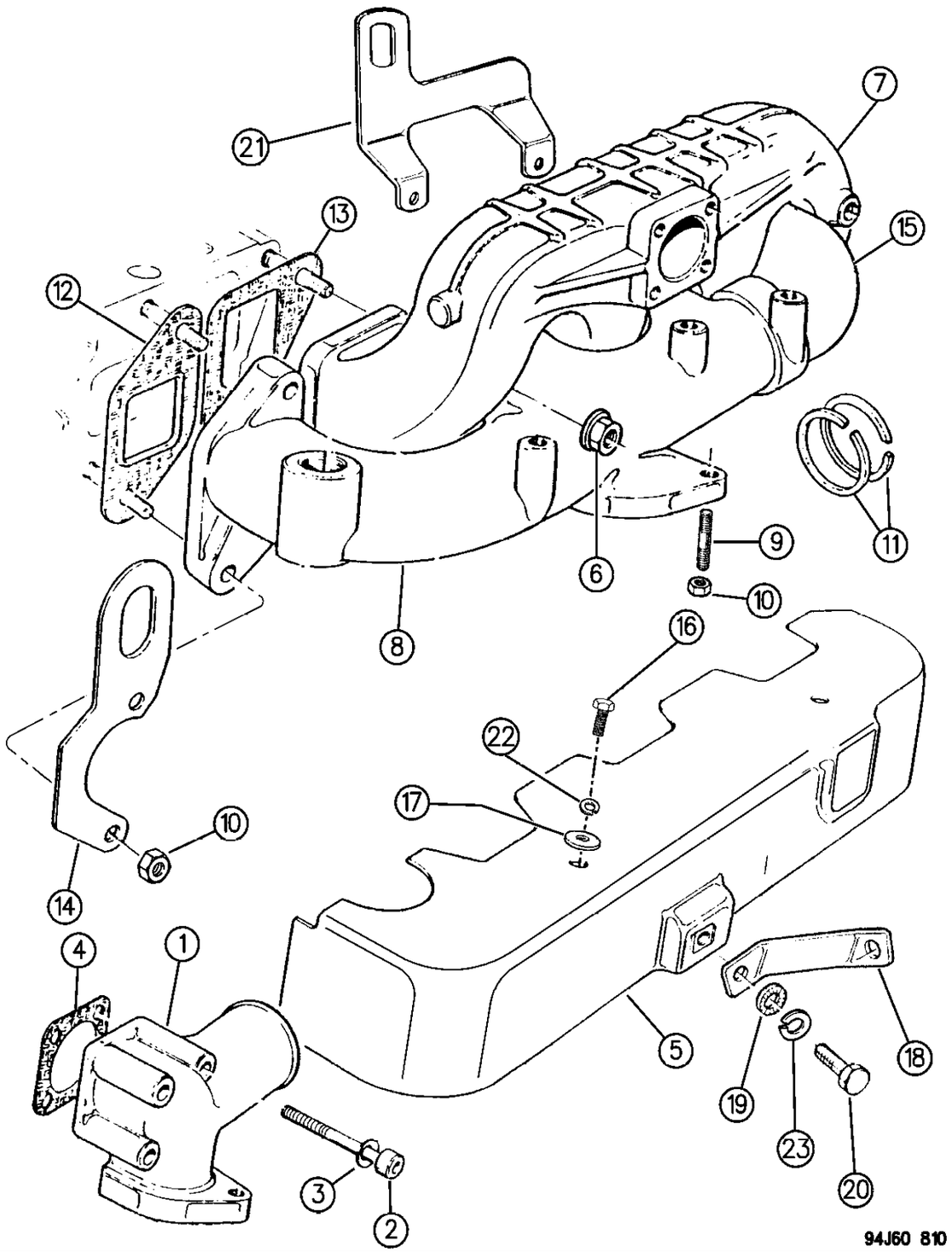

ITEM	PART NUMBER	QTY	BODY	MODEL	DESCRIPTION
1	4778 963	1		XJ	CONNECTOR, Intake Manifold
2	4720 567	4		XJ	SCREW, Connector
3	4720 305	4		XJ	WASHER, Connector Bolt
4	4720 207	1		XJ	GASKET, Connector
5					SHIELD, Manifold
		1		XJ	(Not Serviced)
	4796 405	1		ZG	
6	4778 961	AR			NUT
7					MANIFOLD, Intake ***
	4778 959	1			1995
	4864 563	1			1996
8					MANIFOLD, Exhaust Rear ***
	4778 957	1		XJ	
	4796 104	1		ZG	
9	4741 777	3			STUD, Intake Manifold
10	4720 428	11			NUT, Intake Manifold
11	4720 214	2			CIRCLIP, Exhaust Manifold ***
12	4720 204	1			GASKET, Exhaust Manifold
13	4720 206	1			GASKET, Intake Manifold
14	4778 954	1		XJ	LIFT EYE, Rear ***
15	4778 960	1			MANIFOLD, Exhaust Front ***
16	4728 183	2			BOLT, Shield
17	4723 279	2			WASHER, Shield Bolt
18	4796 396	1		XJ	Bracket, Manifold Shield ***
19					WASHER
	4720 305	1		XJ	
	4720 553	1		ZG	
20					SCREW
	4723 171	1		XJ	(M6x14)
	4723 164	1		ZG	1995
	4864 559	1		ZG	1996
21	4796 105	1		ZG	LIFTING EYE, Front ***
22	4720 305	1		ZG	WASHER, Lock
23	4720 565	1		ZG	WASHER, Lock

MODEL CODES:

72=2 DR Wagon
74=4 DR Wagon
77=Open Body 93" Whlbase
78=Open Body 103" Whlbase - Export
T=2WD
J,N=4WD
U=4WD (RHD)

BODY STYLES:

YJ=Wrangler (4X4) "S"
Weangler (4X4) SE
Wrangler (4X4) Sahara
Wrangler (4X4) Renegade
XJ=Cherokee SE
Cherokee Sport
Cherokee Country
ZJ=Grand Cherokee SE
Grand Cherokee Laredo
Grand Cherolee Limited
ZG=Grand Cherokee European
Y1=Wrangler
X1=Cherokee
Z1=Grand Cherokee
KDX=Vehicles

AR = Use as Required - = Non Illustrated Part P.A.R. = Paint as Required

« RETURN TO GROUP INDEX

CRANKCASE VENTILATION 2.5L DIESEL ENGINE
Figure 9E-910

9E-910C

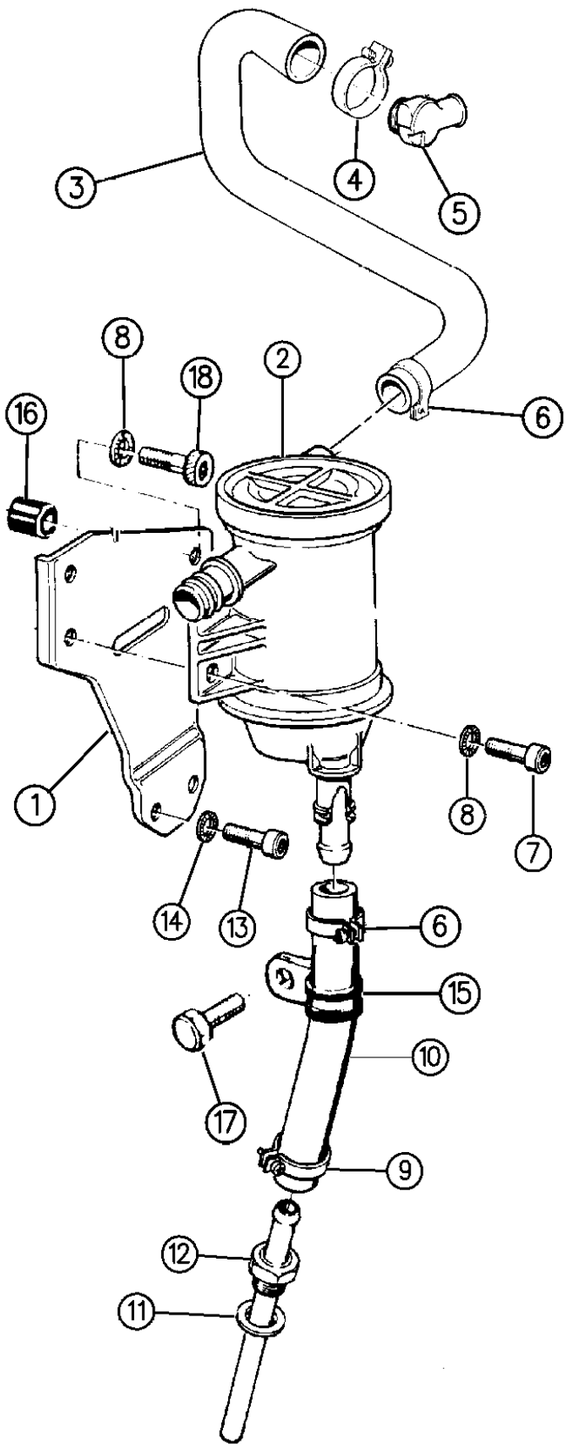

ITEM	PART NUMBER	QTY	BODY	MODEL	DESCRIPTION
1	4778 940	1			BRACKET, Oil Separator
2	4741 769	1			SEPARATOR, Engine Oil ***
3					HOSE, Crankcase Breather
	4778 946	1		XJ	
	4796 102	1		ZG	1995
	4864 560	1		ZG	1996
4	4720 693	1			CLAMP, Breather Hose
5	4720 691	1			ADAPTER, Crankcase Breather
6					CLAMP, Breather Hose
	4723 223	1			1995
	4720 694	1			1996
7					SCREW, Bracket
	4720 695	1			1995
	4864 748	1			1996, (M6x12)
8	4720 305	AR			WASHER
9	4741 774	2			CLAMP, Oil Separator Hose
10	4778 945	1			PIPE, Oil Separator to Block ***
11	4720 704	1			WASHER
12	4778 942	1			UNION, Oil To Sump ***
13					BOLT,Oil Separator Bracket
	4723 164	1			1995
	4864 559	1		XJ	1996
	4864 550	1		ZG	1996
14	4723 223	AR			WASHER, Oil Separator Bracket
15	4778 944	1			CLIP, Oil Separator Hose
16	4796 395	1			GROMMET, Bracket
17					BOLT, Hose Clip
	4720 695	1			1995
	4864 748	1		XJ	1996
	4864 560	1		ZG	1996
18					SCREW, Bracket
	4720 284	1			1995
	4864 749	1		XJ	1996, (M6x20)
	4864 551	1		ZG	1996

MODEL CODES:

72=2 DR Wagon
74=4 DR Wagon
77=Open Body 93" Whlbase
78=Open Body 103" Whlbase - Export
T=2WD
J,N=4WD
U=4WD (RHD)

BODY STYLES:

YJ=Wrangler (4X4) "S"
Weangler (4X4) SE
Wrangler (4X4) Sahara
Wrangler (4X4) Renegade
XJ=Cherokee SE
Cherokee Sport
Cherokee Country
ZJ=Grand Cherokee SE
Grand Cherokee Laredo
Grand Cherolee Limited
ZG=Grand Cherokee European
Y1=Wrangler
X1=Cherokee
Z1=Grand Cherokee
KDX=Vehicles

AR = Use as Required - = Non Illustrated Part P.A.R. = Paint as Required

« RETURN TO GROUP INDEX

ENGINE MOUNTS 2.5L DIESEL ENGINE
Figure 9E-1010

9E-1010B

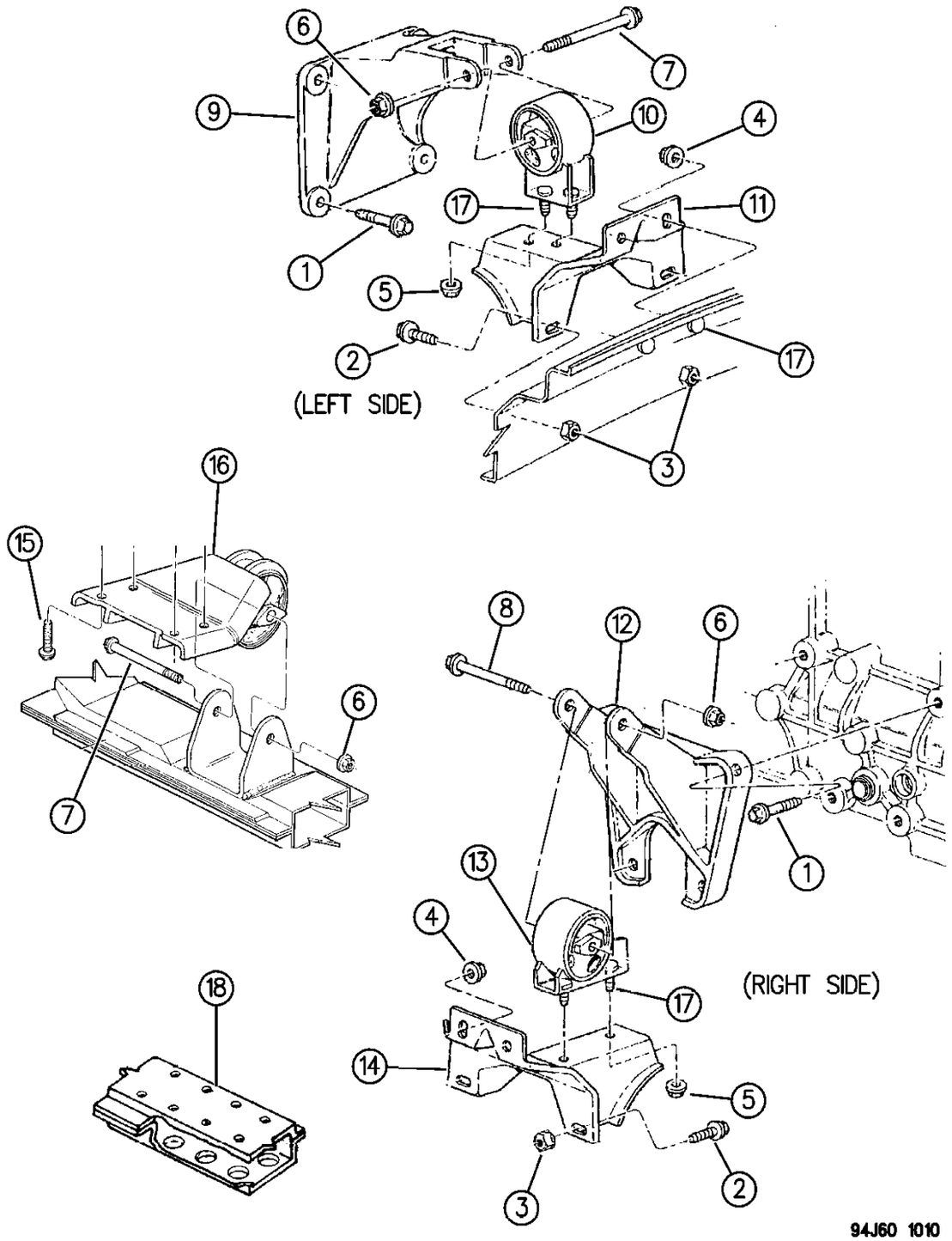

ITEM	PART NUMBER	QTY	BODY	MODEL	DESCRIPTION
1	6101 238	8			SCREW, w/Washer, Mounting Bracket
2	6502 673	4			SCREW, w/Washer, Support to Frame
3					NUT, (Not Serviced)
4		1			NUT, (Not Serviced)
5	3420 1416	4			NUT, Insulator to Bracket
6	6502 697	2			NUT, Insulator
7	3420 2606	1			BOLT, Insulator
8	6101 742	1			BOLT, Insulator
9					BRACKET, Rt., Mount to Insulator
	5205 9146	1		XJ	
	5202 0021	1		ZG	
10					INSULATOR, Lt., Mount ***
	5205 8607	1			1995
	5205 9201	1			1996
11	5205 8527	1			BRACKET, Lt., Insulator to Sill
12					BRACKET, Rt., Mount to Insulator
	5202 0020	1			
	5305 4308	1		ZG	RHD
13					INSULATOR, Rt., Mount ***
	5205 8606	1			1995
	5205 9200	1			1996
14	5205 8526	1			BRACKET, Rt., Insulator to Sill
15					BOLT, (Not Serviced)
16	5205 8539	1			INSULATOR, Transmission ***
17					SCREW, (Not Serviced)
18					CROSSMEMBER, Transmission Support
	5205 8682	1		XJ	
	5205 8689	1		ZG	

MODEL CODES:

72=2 DR Wagon
74=4 DR Wagon
77=Open Body 93" Whlbase
78=Open Body 103" Whlbase - Export
T=2WD
J,N=4WD
U=4WD (RHD)

BODY STYLES:

YJ=Wrangler (4X4) "S"
Weangler (4X4) SE
Wrangler (4X4) Sahara
Wrangler (4X4) Renegade
XJ=Cherokee SE
Cherokee Sport
Cherokee Country
ZJ=Grand Cherokee SE
Grand Cherokee Laredo
Grand Cherolee Limited
ZG=Grand Cherokee European
Y1=Wrangler
X1=Cherokee
Z1=Grand Cherokee
KDX=Vehicles

AR = Use as Required - = Non Illustrated Part P.A.R. = Paint as Required

« RETURN TO GROUP INDEX

SAGIPARTS

GROUP-11
EXHAUST

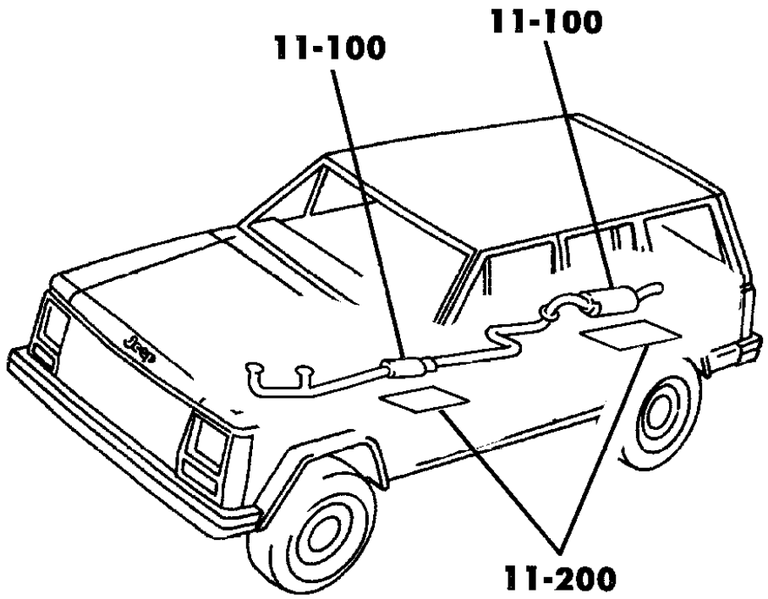

11-100 EXHAUST PIPE & MUFFLER	11-200 HEAT SHIELDS		
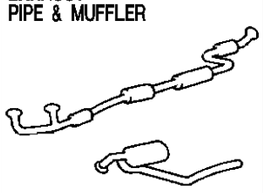	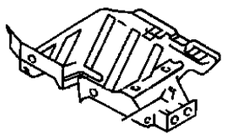		

GROUP 11 - EXHAUST

ILLUSTRATION TITLE — **GROUP-FIG. NO.**

EXHAUST SYSTEM

EXHAUST SYSTEM 2.5L, 4.0L ENGINE YJ BODY . . . . . Fig. 11-110
EXHAUST SYSTEM 2.5L, 4.0L ENGINE, EXCEPT DIESEL XJ BODY . . . . . Fig. 11-120
EXHAUST SYSTEM 2.1L DIESEL ENGINE XJ BODY . . . . . Fig. 11-130
EXHAUST SYSTEM 2.5L DIESEL ENGINE XJ BODY (1 OF 2) . . . . . Fig. 11-135
EXHAUST SYSTEM 2.5L DIESEL ENGINE XJ BODY (2 OF 2) . . . . . Fig. 11-136
EXHAUST SYSTEM 4.0L, 5.2L ENGINE, EXCEPT DIESEL ZJ, ZG . . . . . Fig. 11-140
EXHAUST SYSTEM 2.5L DIESEL ENGINE ZG BODY (1 OF 2) . . . . . Fig. 11-145
EXHAUST SYSTEM 2.5L DIESEL ENGINE ZG BODY (2 OF 2) . . . . . Fig. 11-150

HEAT SHIELDS

SHIELDS, HEAT ZJ BODY . . . . . Fig. 11-210

EXHAUST SYSTEM 2.5L, 4.0L ENGINE YJ BODY
Figure 11-110

11–110

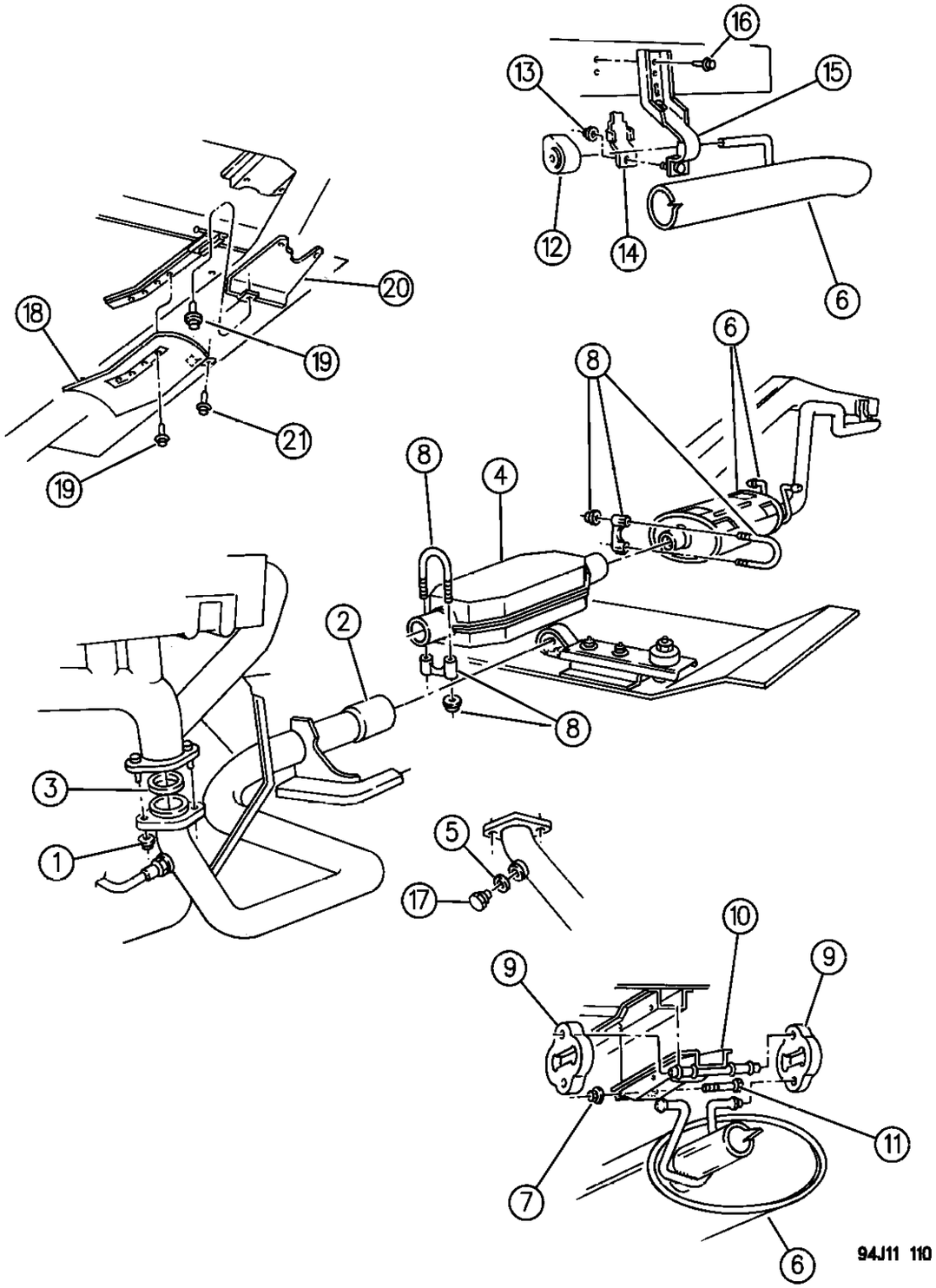

ITEM	PART NUMBER	QTY	BODY	MODEL	DESCRIPTION
1	J400 5142	2			NUT
2					PIPE, Front Exhaust
	5201 8177	1			2.5L Eng.
	5201 8176	1			4.0L Eng.
3	5200 5431	1			RING, Seal, Manifold
4					CONVERTER, w/Pipes
	5202 0110	1			2.5L Eng.
					4.0L Eng.
	5201 8128	1			Federal
	5201 8128	1			Calif., Man. Trans.
	5201 8141	1			Calif., Auto Trans.
	4778 104	1			Export, Leaded Fuel, (Conversion Pkg.)
	5200 5199	1			RESONATOR, Export, Leaded Fuel ***
	5300 7481	1			HOSE, Resonator, 2.5L Eng.
5	6034 057	1			WASHER, Export, Leaded Fuel
6					MUFFLER, w/Tail Pipe
					2.5L Eng.
	5201 9136	1			
	5201 9136	1	77		Export
	5201 9147	1	78		Export
			78		4.0L Eng.
	5201 9135	1			
	5201 9135	1	77		Export
	5201 8361	1	78		Export
	5201 8660	1			EUROPE
7		2			NUT, (Not Serviced)
8	5200 2144	2			CLAMP
9	5201 8814	2			INSULATOR
10	5200 2506	1			HANGER, Muffler, Upper
11	J018 0046	2			BOLT
12	5204 0219	1			INSULATOR, Hanger
13	J400 6080	1			NUT
14	5200 3427	1			BRACKET, Tailpipe Hanger, Inner
15	5200 3426	1			BRACKET, Tailpipe Hanger, Outer
16	J400 1933	2			SCREW
17	J420 0413	1			PLUG, Leaded Fuel
18	5200 3280	1			SHIELD, Muffler Heat
19	J942 6241	4			SCREW
20	5200 3271	1			SHIELD, Tailpipe Heat
21	J943 1948	1			SCREW

MODEL CODES:

72=2 DR Wagon
74=4 DR Wagon
77=Open Body 93" Whlbase
78=Open Body 103" Whlbase - Export
T=2WD
J,N=4WD
U=4WD (RHD)

BODY STYLES:

YJ=Wrangler (4X4) "S"
Weangler (4X4) SE
Wrangler (4X4) Sahara
Wrangler (4X4) Renegade
XJ=Cherokee SE
Cherokee Sport
Cherokee Country
ZJ=Grand Cherokee SE
Grand Cherokee Laredo
Grand Cherolee Limited
ZG=Grand Cherokee European
Y1=Wrangler
X1=Cherokee
Z1=Grand Cherokee
KDX=Vehicles

AR = Use as Required - = Non Illustrated Part P.A.R. = Paint as Required

« RETURN TO GROUP INDEX

EXHAUST SYSTEM 2.5L, 4.0L ENGINE, EXCEPT DIESEL XJ BODY
Figure 11-120

11–120A

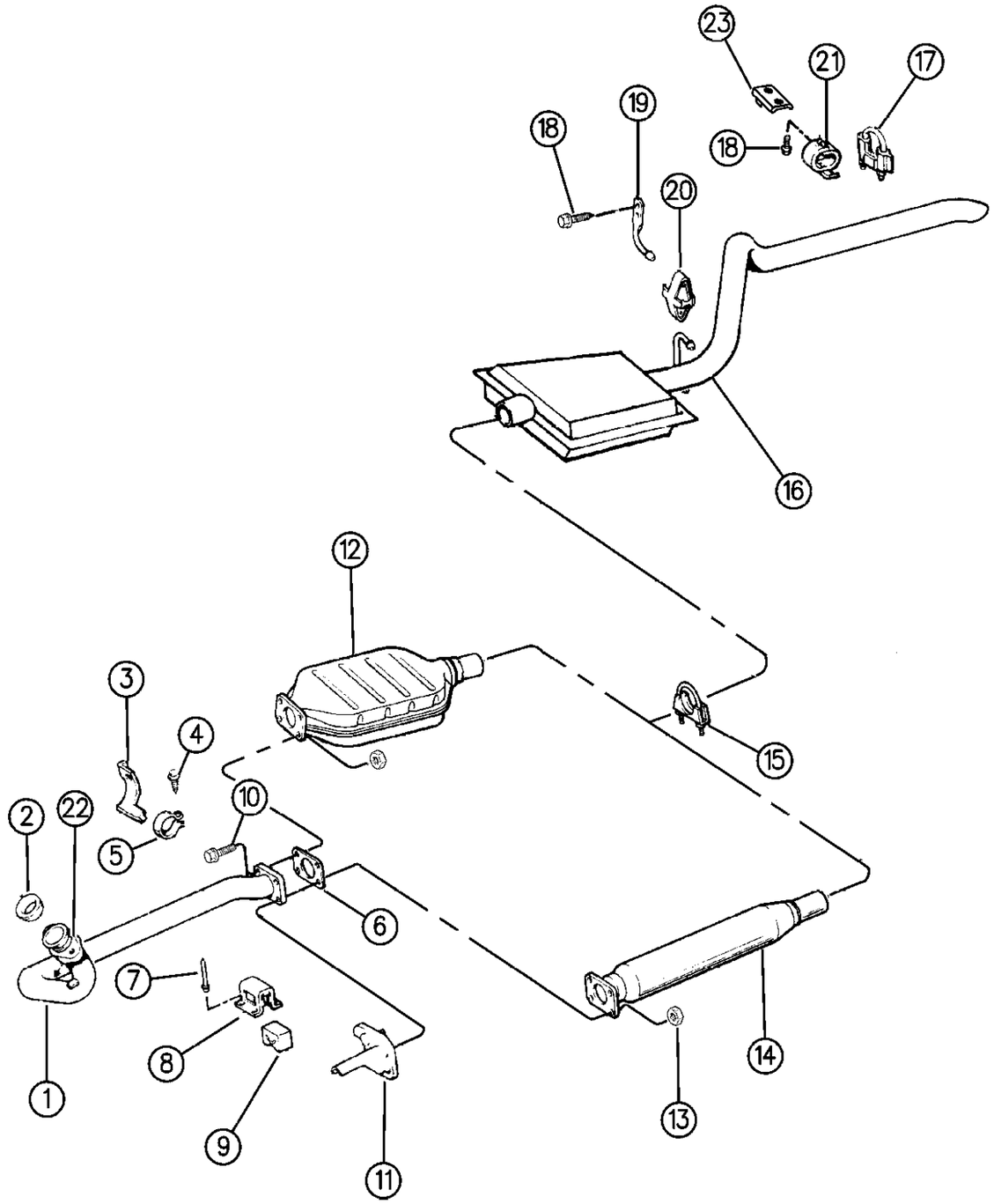

ITEM	PART NUMBER	QTY	BODY	MODEL	DESCRIPTION
1					PIPE, Front Exhaust
					2.5L Eng.
	5201 9357	1			1994-95
	5202 1047	1			1996
					4.0L Eng.
	5210 1358	1			1994-95
	5202 0069	1			1996
-	5202 8184	1			STIFFENER, Front Exhaust Pipe, 2.5L Eng. ***
2	5200 5431	1			SEAL, 4.0L Eng.
3	5300 1652	1			SUPPORT, 2.5L Eng.
4		1			SCREW, (Not Serviced)
5	5200 3656	1			CLAMP
6	5201 7817	1			GASKET
7	J400 6543	4			RIVET
8	5300 0104	1			BRACKET
9					INSULATOR
	5300 0101	1			1994-95
	5205 8884	1			1996
10	J812 5845	2			BOLT
11	5200 3040	1			SUPPORT
12					CONVERTER, Catalytic
					2.5L Eng.
	5202 0110	1			1994-95
	5201 9485	1			1996, Federal
	5201 9483	1			1996, Calif.
					4.0L Eng.
	5201 8128	1			1994-95, Federal
	5201 8128	1			1994-95, Calif., Man. Trans.
	5201 8141	1			1994-95, Calif., Auto Trans.
	5201 9484	1			1996, Federal
	5201 9481	1			1996, Calif.
-	5201 8424	2			CLAMP, Converter to Front Pipe
13	J400 5142	4			NUT
14					RESONATOR, w/Leaded Fuel ***
	5201 9500	1			Middle East Package
	5201 8941	1			KDX
15	5200 2144	1			CLAMP
16					MUFFLER and TAILPIPE ASSEMBLY, w/Hanger ***
					2.5L Eng.
	5201 9137	1			1994-95
	5202 2040	1			1996
					4.0L Eng.

MODEL CODES:

72=2 DR Wagon
74=4 DR Wagon
77=Open Body 93" Whlbase
78=Open Body 103" Whlbase - Export
T=2WD
J,N=4WD
U=4WD (RHD)

BODY STYLES:

YJ=Wrangler (4X4) "S"
Weangler (4X4) SE
Wrangler (4X4) Sahara
Wrangler (4X4) Renegade
XJ=Cherokee SE
Cherokee Sport
Cherokee Country
ZJ=Grand Cherokee SE
Grand Cherokee Laredo
Grand Cherolee Limited
ZG=Grand Cherokee European
Y1=Wrangler
X1=Cherokee
Z1=Grand Cherokee
KDX=Vehicles

AR = Use as Required - = Non Illustrated Part P.A.R. = Paint as Required

EXHAUST SYSTEM 2.5L, 4.0L ENGINE, EXCEPT DIESEL XJ BODY
Figure 11-120

11–120A

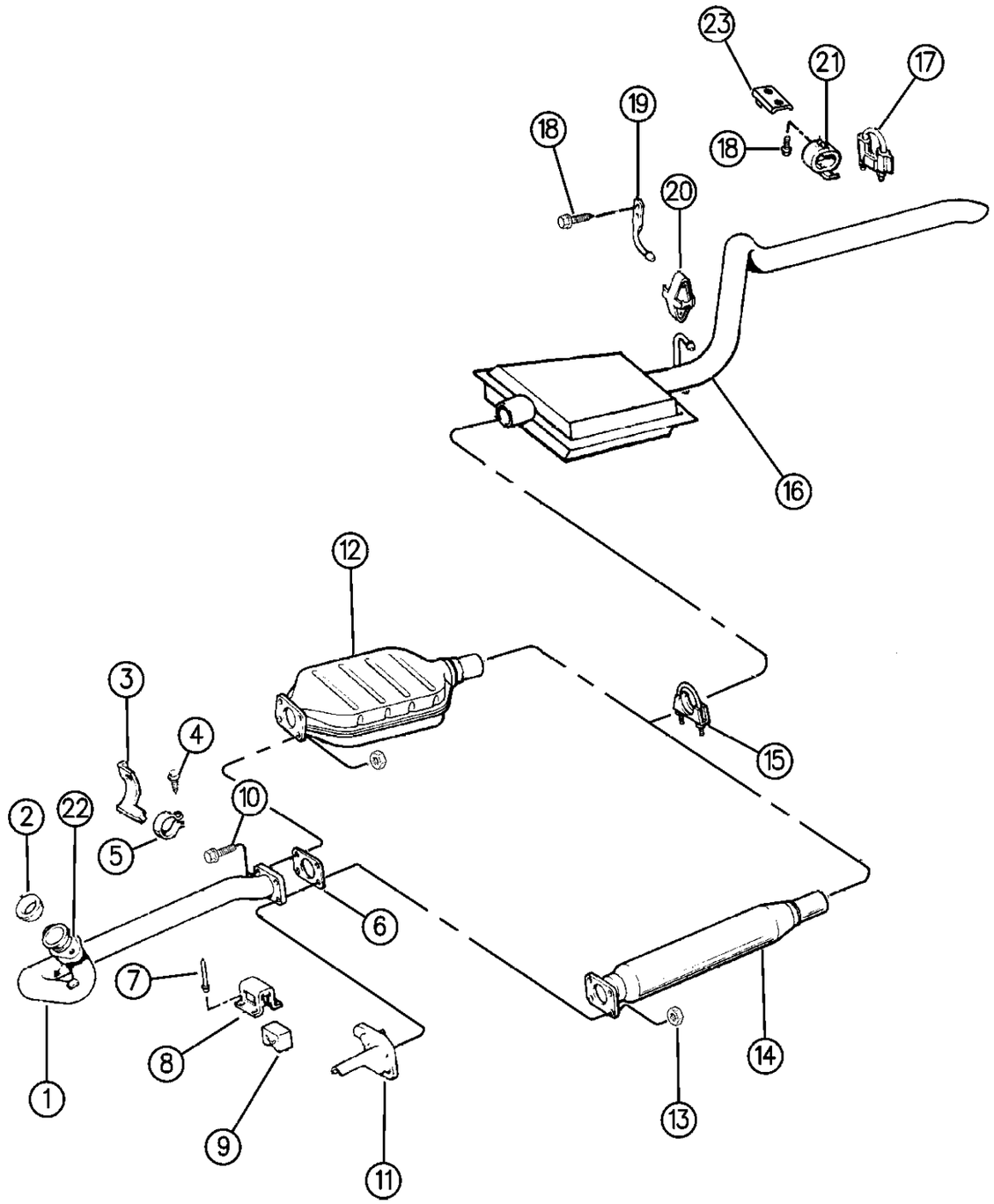

94J11 120

ITEM	PART NUMBER	QTY	BODY	MODEL	DESCRIPTION
	5201 9138	1			1994-95
	5210 1042	1			1995, JAPAN
	5202 2039	1			1996
	5202 0025	1			1994-96 EXPORT
17	4301 081	1			CLAMP
18	3420 1193	AR			SCREW
19					HANGER
	5200 2403	1			1994-95
	5210 1005	1			1996
20	5200 1759	AR			INSULATOR, Support
21	5200 2794	1			INSULATOR AND BRACKET ASSEMBLY ***
22		1			FLANGE, Exhaust Pipe to Manifold (Serviced in Exhaust Pipe Assembly)
23	J535 8978	1			REINFORCEMENT, Insulator

MODEL CODES:

72=2 DR Wagon
74=4 DR Wagon
77=Open Body 93" Whlbase
78=Open Body 103" Whlbase - Export
T=2WD
J,N=4WD
U=4WD (RHD)

BODY STYLES:

YJ=Wrangler (4X4) "S"
Weangler (4X4) SE
Wrangler (4X4) Sahara
Wrangler (4X4) Renegade

XJ=Cherokee SE
Cherokee Sport
Cherokee Country

ZJ=Grand Cherokee SE
Grand Cherokee Laredo
Grand Cherolee Limited
ZG=Grand Cherokee European

Y1=Wrangler
X1=Cherokee
Z1=Grand Cherokee
KDX=Vehicles

AR = Use as Required - = Non Illustrated Part P.A.R. = Paint as Required

EXHAUST SYSTEM 2.1L DIESEL ENGINE XJ BODY
Figure 11-130

11–130

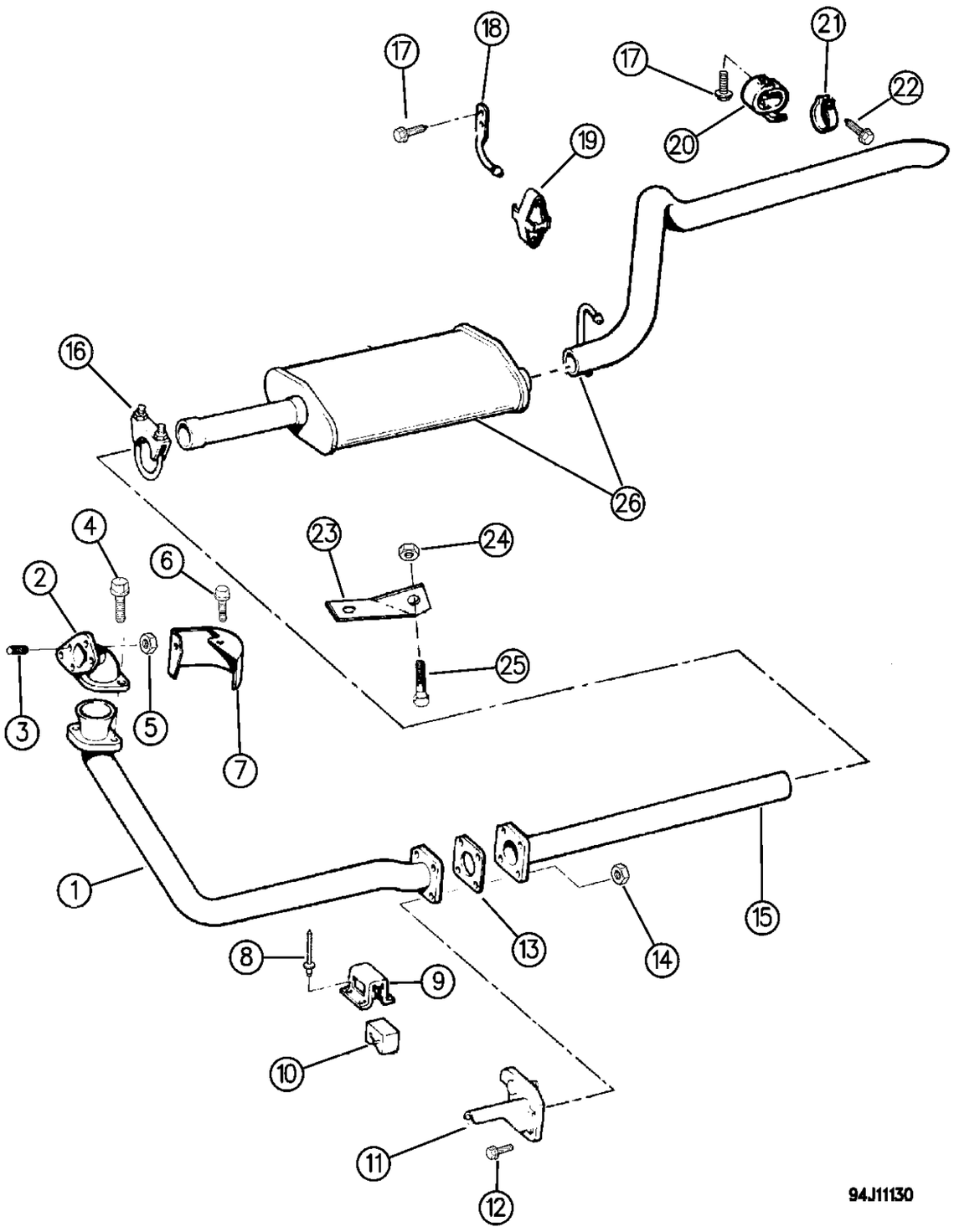

ITEM	PART NUMBER	QTY	BODY	MODEL	DESCRIPTION
1	5200 3011	1			PIPE, Front Exhaust
2	5300 1750	1			ADAPTER, Turbocharger
3	3420 2088	4			STUD
4	J400 7109	2			STUD
5	1150 0749	4			NUT
6	1150 4986	1			BOLT
7	4637 316	1			SHIELD, Adapter
8	3420 2083	4			RIVET
9	5300 0104	1			BRACKET
10	5300 0101	1			INSULATOR
11	5200 3040	1			SUPPORT
12	0432 551	AR			BOLT
13	5201 7817	1			GASKET
14	J400 4008	4			NUT
15	5200 3013	1			PIPE, Exhaust Adapter
16	5200 1860	1			CLAMP
17	3420 1193	AR			SCREW
18					HANGER
	5200 2403	1			1994-95
	5210 1005	1			1996
19	5200 1759	AR			SUPPORT
20	5200 2794	1			HANGER
21	5200 3656	1			CLAMP
22	J400 4692	AR			SCREW
23	5300 6653	1			BRACKET
24	1150 3745	2			NUT
25	3420 1807	2			BOLT
26	5200 2204	1			TAILPIPE and MUFFLER ASSEMBLY ***

MODEL CODES:

72=2 DR Wagon
74=4 DR Wagon
77=Open Body 93" Whlbase
78=Open Body 103" Whlbase - Export
T=2WD
J,N=4WD
U=4WD (RHD)

BODY STYLES:

YJ=Wrangler (4X4) "S"
Weangler (4X4) SE
Wrangler (4X4) Sahara
Wrangler (4X4) Renegade
XJ=Cherokee SE
Cherokee Sport
Cherokee Country
ZJ=Grand Cherokee SE
Grand Cherokee Laredo
Grand Cherolee Limited
ZG=Grand Cherokee European
Y1=Wrangler
X1=Cherokee
Z1=Grand Cherokee
KDX=Vehicles

AR = Use as Required - = Non Illustrated Part P.A.R. = Paint as Required

« RETURN TO GROUP INDEX

EXHAUST SYSTEM 2.5L DIESEL ENGINE XJ BODY (1 OF 2)
Figure 11-135

11–135

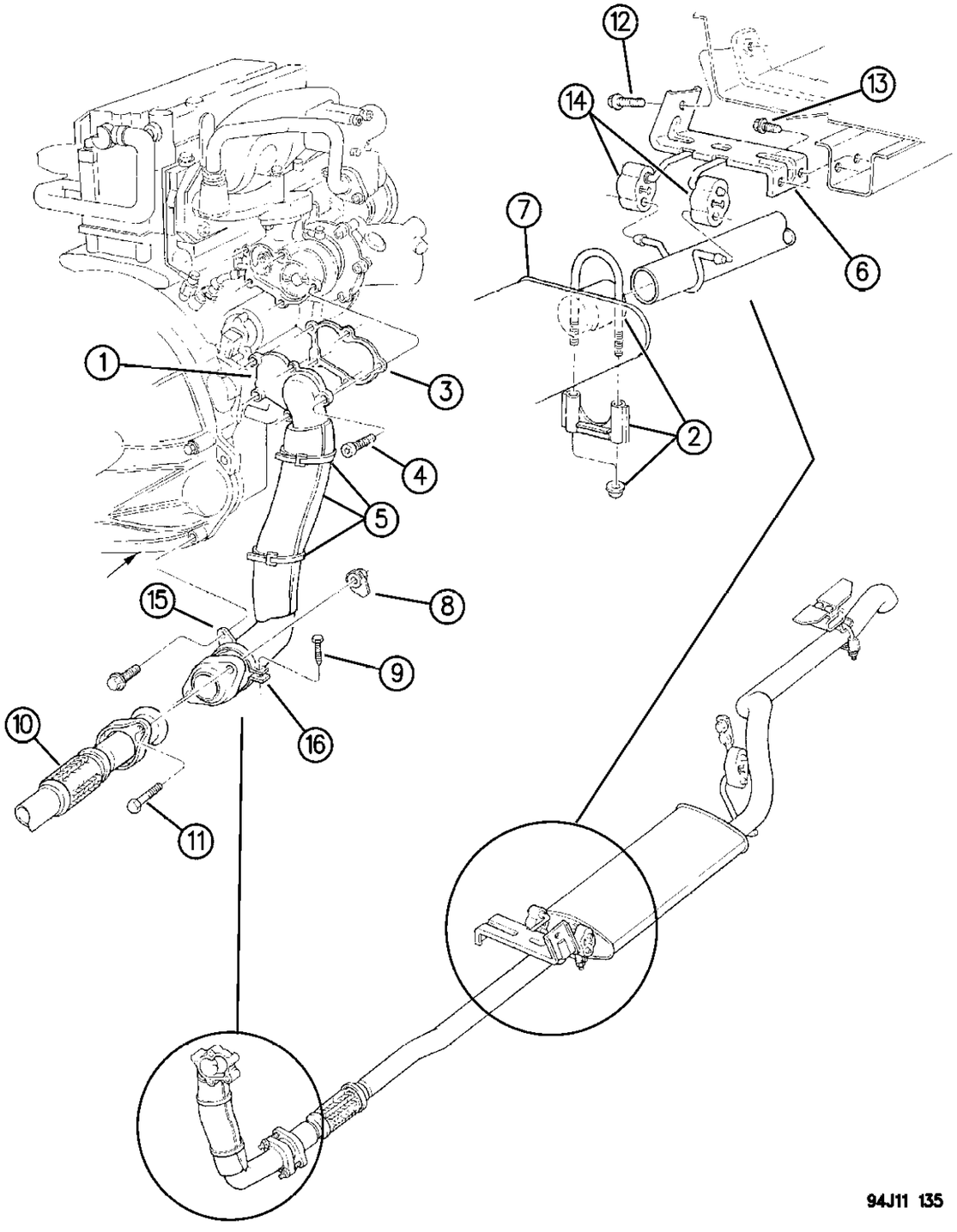

ITEM	PART NUMBER	QTY	BODY	MODEL	DESCRIPTION
1	5202 0276	1			ADAPTOR, Turbo Exhaust ***
2	5200 2144	2			CLAMP
3	5201 8875	1			GASKET, Adaptor
4	6503 423	5			SCREW
5					SHIELD, Front Pipe Heat
	5201 9377	1			1994-95
	5207 9405	1			1996
6	5201 8915	1			HANGER, Muffler Support
7					MUFFLER, w/Tailpipe
	5202 0152	1			1994-95
	5202 1038	1			1996
8	6031 959	2			NUT
9	J400 4692	1			SCREW
10					PIPE, w/Flex Coupling and 2 Hangers
	5201 9275	1			1994-95
	5202 0077	1			1996
11	6035 375	2			BOLT
12		1			BOLT, (Not Serviced)
13		2			SCREW, (Not Serviced)
14	5201 7607	2			ISOLATOR ***
15	5201 8818	1			HANGER, Down Pipe
16	5201 8819	1			BAND, Down Pipe

MODEL CODES:

72=2 DR Wagon
74=4 DR Wagon
77=Open Body 93" Whlbase
78=Open Body 103" Whlbase - Export
T=2WD
J,N=4WD
U=4WD (RHD)

BODY STYLES:

YJ=Wrangler (4X4) "S"
Weangler (4X4) SE
Wrangler (4X4) Sahara
Wrangler (4X4) Renegade

XJ=Cherokee SE
Cherokee Sport
Cherokee Country

ZJ=Grand Cherokee SE
Grand Cherokee Laredo
Grand Cherolee Limited
ZG=Grand Cherokee European

Y1=Wrangler
X1=Cherokee
Z1=Grand Cherokee
KDX=Vehicles

AR = Use as Required - = Non Illustrated Part P.A.R. = Paint as Required

« RETURN TO GROUP INDEX

EXHAUST SYSTEM 2.5L DIESEL ENGINE XJ BODY (2 OF 2)
Figure 11-136

11–136

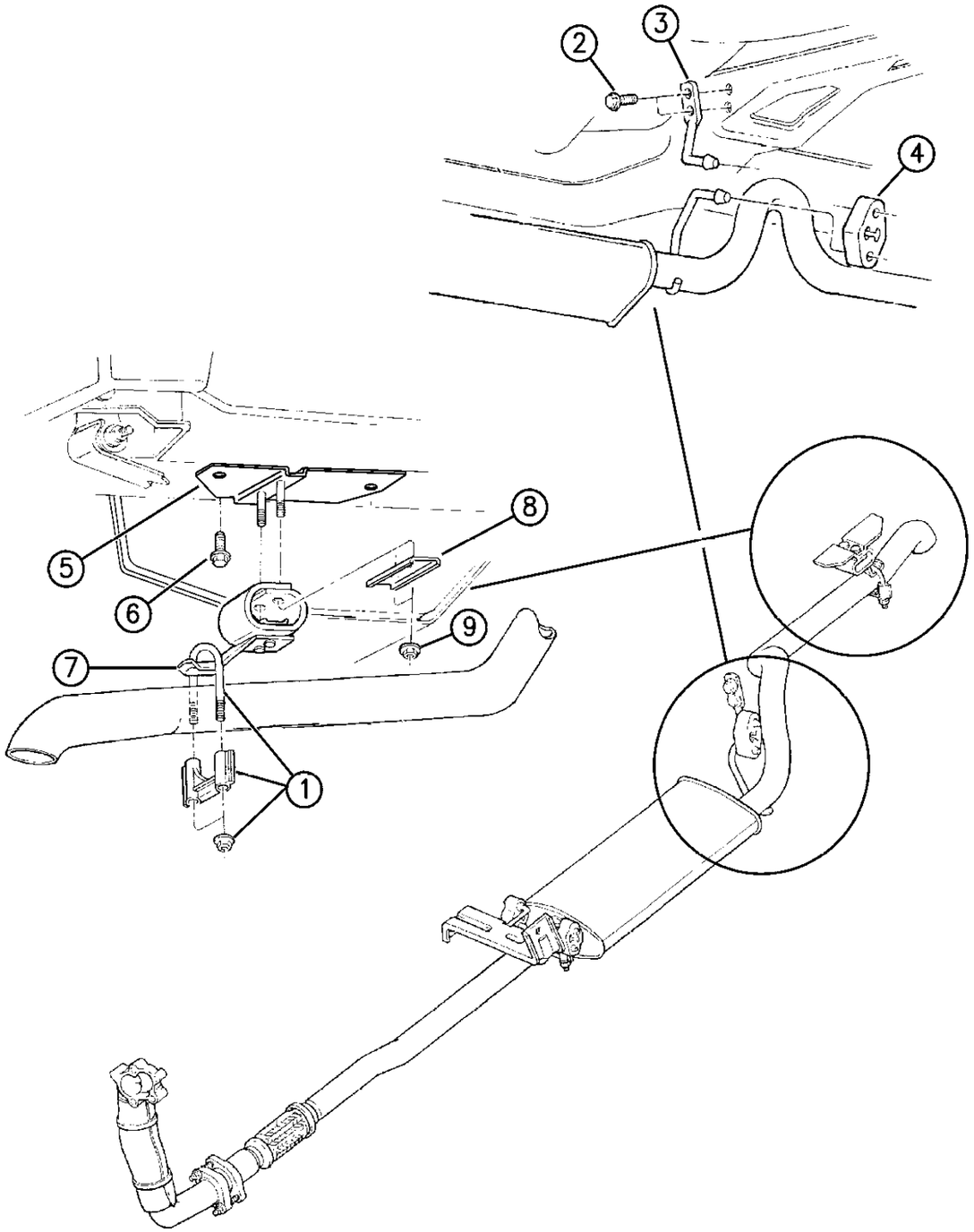

ITEM	PART NUMBER	QTY	BODY	MODEL	DESCRIPTION
1	5200 2144	2			CLAMP
2	J420 0402	2			SCREW
3					HANGER, Upper Muffler Support
	5200 2403	1			1994-95
	5210 1005	1			1996
4	5200 1759	1			ISOLATOR ***
5	5200 1511	1			BRACKET, Tailpipe Mtg.
6	3420 1964	2			BOLT
7	5200 2794	1			INSULATOR, w/Bracket, Tailpipe
8	J535 8978	1			PLATE
9	3420 1711	2			NUT
-	5201 7607	1			INSULATOR, Front Hanger

MODEL CODES:

72=2 DR Wagon
74=4 DR Wagon
77=Open Body 93" Whlbase
78=Open Body 103" Whlbase - Export
T=2WD
J,N=4WD
U=4WD (RHD)

BODY STYLES:

YJ=Wrangler (4X4) "S"
Weangler (4X4) SE
Wrangler (4X4) Sahara
Wrangler (4X4) Renegade

XJ=Cherokee SE
Cherokee Sport
Cherokee Country

ZJ=Grand Cherokee SE
Grand Cherokee Laredo
Grand Cherolee Limited
ZG=Grand Cherokee European

Y1=Wrangler
X1=Cherokee
Z1=Grand Cherokee
KDX=Vehicles

AR = Use as Required - = Non Illustrated Part P.A.R. = Paint as Required

EXHAUST SYSTEM 4.0L, 5.2L ENGINE, EXCEPT DIESEL ZJ, ZG
Figure 11-140

11–140F

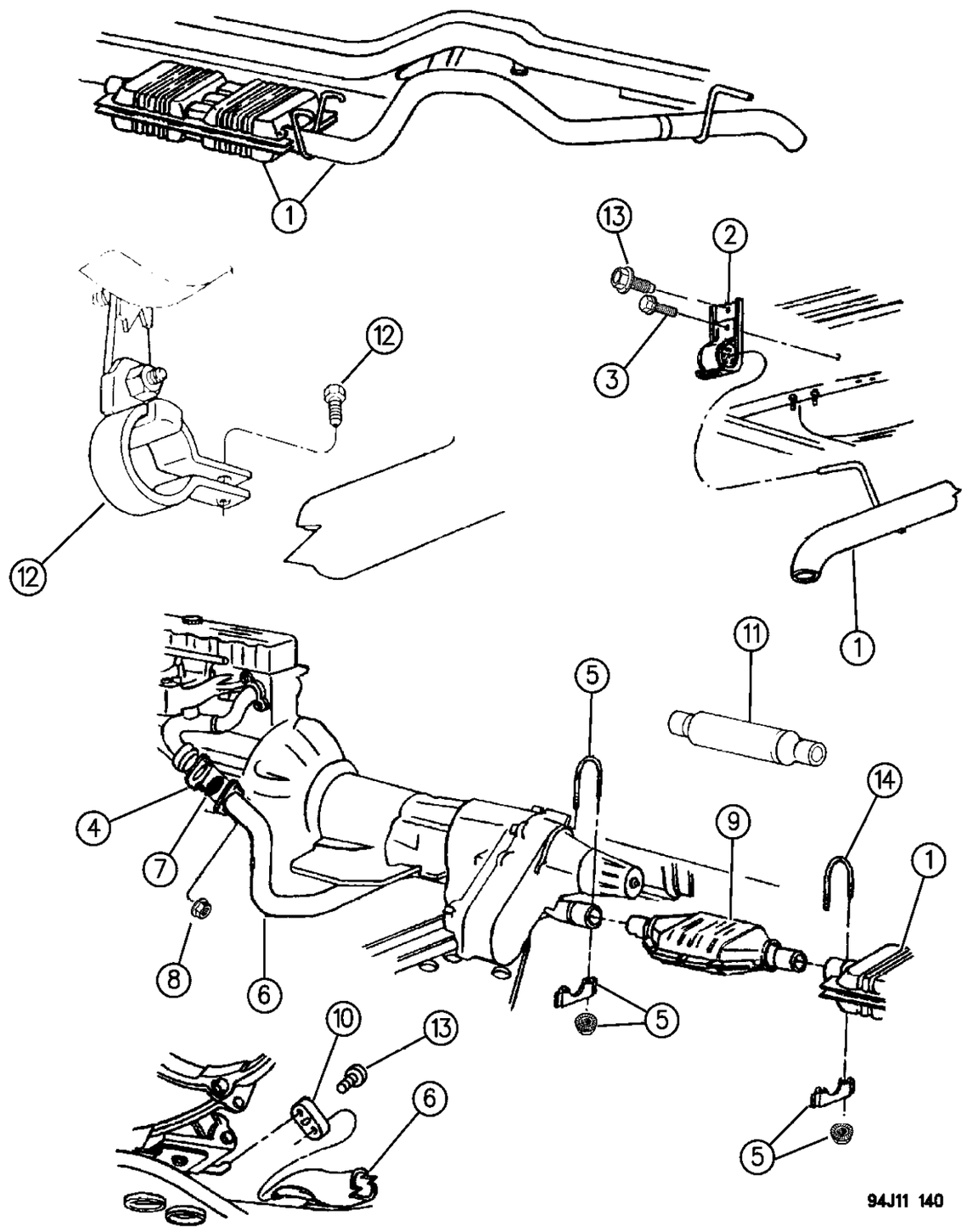

ITEM	PART NUMBER	QTY	BODY	MODEL	DESCRIPTION
1					MUFFLER, w/Tailpipe
					4.0L Eng.
	4864 279	1			1994-95
	5210 1110	1			1996
	5305 4502	1		ZG	1996, RHD
					5.2L Eng.
	5202 1030	1			1994-95
	5202 1037	1			1996
2					HANGER, Tailpipe, w/Bolt
	5201 8085	1			1994
	5210 1034	1			1995-96
3	6101 542	2			SCREW, Hanger
4	0181 127	AR			BOLT, Flange
5					CLAMP
	5200 2144	2			4.0L Eng.
	5201 8424	1			5.2L Eng.
6					PIPE, Front Exhaust
					4.0L Eng.
	5202 0150	1			1994-95
	5201 8936	1			1996
					5.2L Eng.
	5200 7051	1			1994-95
	5202 1013	1			1996
-					BRACKET, Rear Engine Mount, w/Exhaust Hanger
-	5205 8608	1			4.0L Eng.
-					5.2L Eng.
-	5205 8605	1			1994-95
-	5205 8488	1			1996
-	5208 5085	1			BUSHING, Hanger
7	5200 5431	AR			SEAL RING ***
8	J400 4008	2			NUT
-	4004 001	AR			RETAINER, Exhaust Manifold
9					CONVERTER, Catalytic, w/Pipes
					4.0L Eng., Federal
	5201 7717	1			1994-95, Federal
	5201 7718	1			1994-95, Calif.
	5201 9480	1			1996, Federal
	5202 2019	1			1996, Calif.
					5.2L Eng.
	5201 9600	1			1994-95
	5202 0486	1			1996, Federal
	5201 9482	1			1996, Calif.

MODEL CODES:

72=2 DR Wagon
74=4 DR Wagon
77=Open Body 93" Whlbase
78=Open Body 103" Whlbase - Export
T=2WD
J,N=4WD
U=4WD (RHD)

BODY STYLES:

YJ=Wrangler (4X4) "S"
Weangler (4X4) SE
Wrangler (4X4) Sahara
Wrangler (4X4) Renegade
XJ=Cherokee SE
Cherokee Sport
Cherokee Country
ZJ=Grand Cherokee SE
Grand Cherokee Laredo
Grand Cherolee Limited
ZG=Grand Cherokee European
Y1=Wrangler
X1=Cherokee
Z1=Grand Cherokee
KDX=Vehicles

AR = Use as Required - = Non Illustrated Part P.A.R. = Paint as Required

EXHAUST SYSTEM 4.0L, 5.2L ENGINE, EXCEPT DIESEL ZJ, ZG
Figure 11-140

11–140F

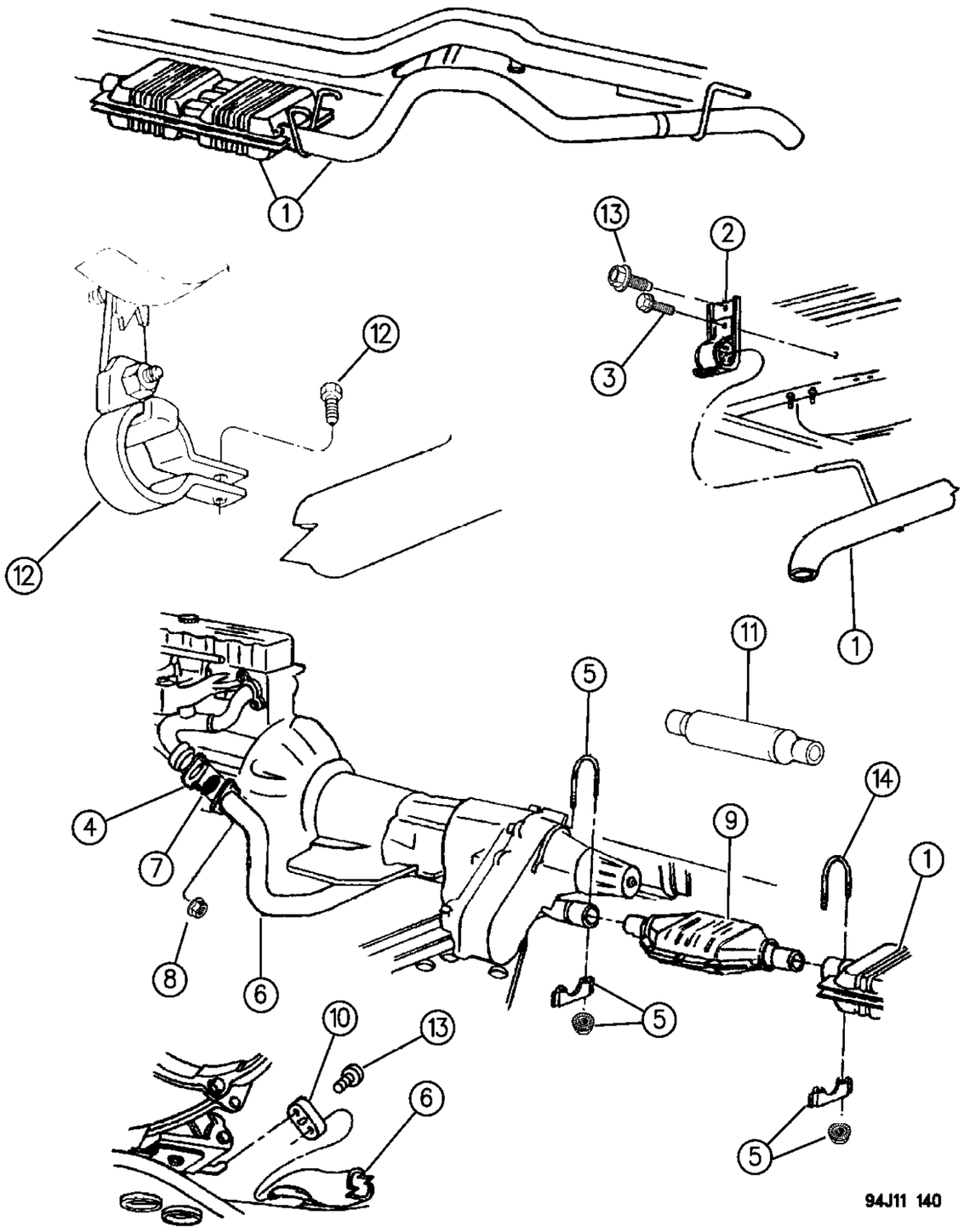

ITEM	PART NUMBER	QTY	BODY	MODEL	DESCRIPTION
10					INSULATOR, Muffler
	4218 625	1			1994
	5201 9479	1			1995-96
11					RESONATOR, w/Leaded Fuel ***
	5200 5199	1			4.0L Eng.
	5202 0154	1			5.2L Eng.
-	4762 357	1			PACKAGE, Leaded Fuel Conversion, 5.2L Eng.
12	5201 8849	1			HANGER, Front Y-Pipe, 5.2L Eng.
13	6033 047	1			BOLT, (.312-18x2.00)
14	5200 2144	1			CLAMP, 5.2L Eng.

MODEL CODES:

72=2 DR Wagon
74=4 DR Wagon
77=Open Body 93" Whlbase
78=Open Body 103" Whlbase - Export
T=2WD
J,N=4WD
U=4WD (RHD)

BODY STYLES:

YJ=Wrangler (4X4) "S"
Weangler (4X4) SE
Wrangler (4X4) Sahara
Wrangler (4X4) Renegade
XJ=Cherokee SE
Cherokee Sport
Cherokee Country
ZJ=Grand Cherokee SE
Grand Cherokee Laredo
Grand Cherolee Limited
ZG=Grand Cherokee European
Y1=Wrangler
X1=Cherokee
Z1=Grand Cherokee
KDX=Vehicles

AR = Use as Required - = Non Illustrated Part P.A.R. = Paint as Required

EXHAUST SYSTEM 2.5L DIESEL ENGINE ZG BODY (1 OF 2)
Figure 11-145

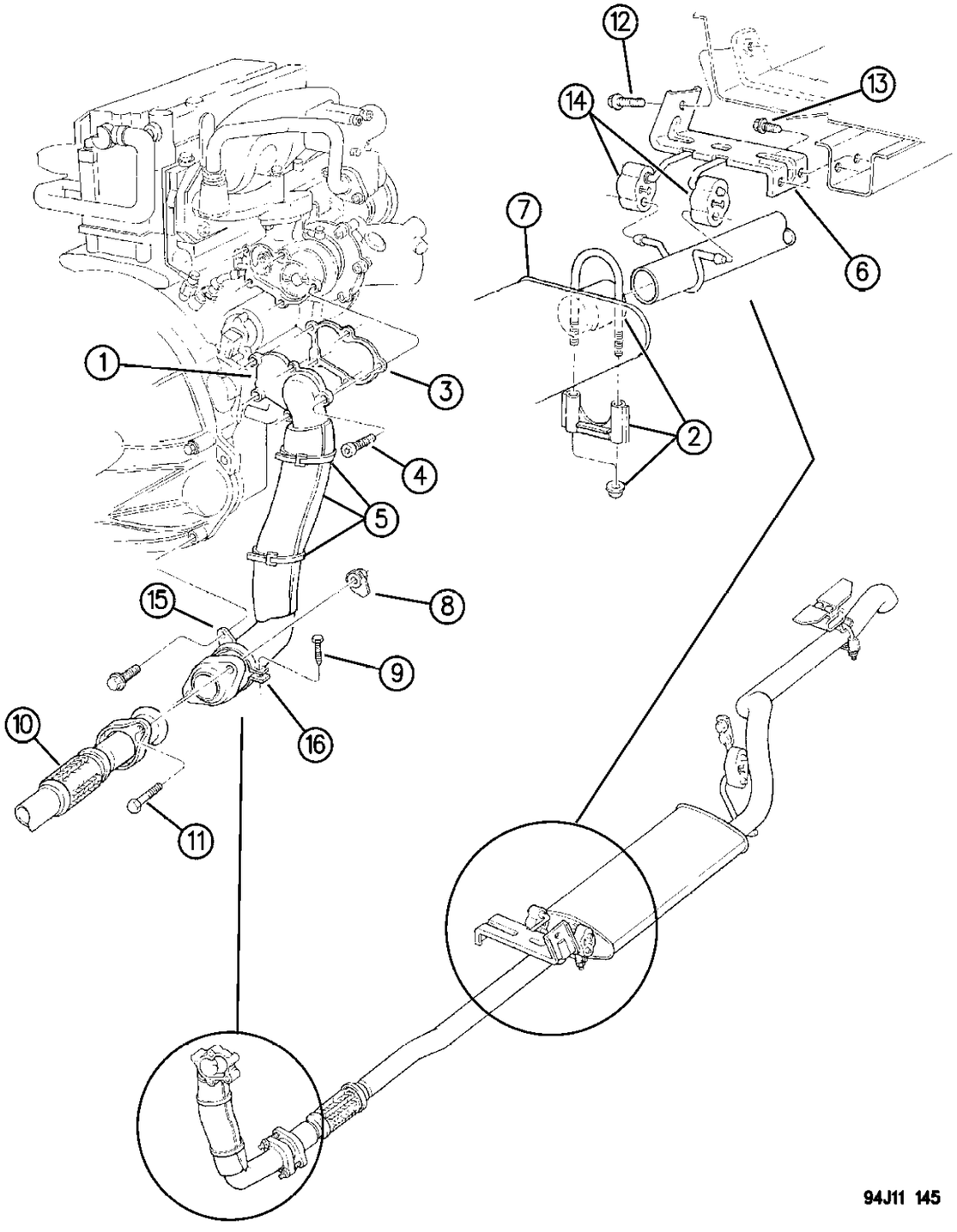

ITEM	PART NUMBER	QTY	BODY	MODEL	DESCRIPTION
1	5202 0276	1			ADAPTOR, Turbo Exhaust ***
2	5200 2144	2			CLAMP
3	5201 8875	1			GASKET, Adaptor
4	6503 423	5			SCREW
5	5201 9377	1			SHIELD, Front Pipe Heat
6	5305 4466	1			HANGER, Muffler Support
7					MUFFLER, w/Tailpipe
					LHD
	5202 2033	1			1994-95
	5210 1060	1			1996
	5305 4200	1			RHD
8	6031 959	2			NUT
9	J400 4692	1			SCREW
10					PIPE, Front Exhaust, w/Flex Coupling
	5305 4203	1			1994-95
	5305 4203	1			1996
11	6035 375	2			BOLT
12		1			BOLT, (Not Serviced)
13		2			SCREW, (Not Serviced)
14	5201 7607	2			ISOLATOR ***
15	5201 8818	1			HANGER, Down Pipe
16	5201 8819	1			BAND, Down Pipe

MODEL CODES:

72=2 DR Wagon
74=4 DR Wagon
77=Open Body 93" Whlbase
78=Open Body 103" Whlbase - Export
T=2WD
J,N=4WD
U=4WD (RHD)

BODY STYLES:

YJ=Wrangler (4X4) "S"
Weangler (4X4) SE
Wrangler (4X4) Sahara
Wrangler (4X4) Renegade
XJ=Cherokee SE
Cherokee Sport
Cherokee Country
ZJ=Grand Cherokee SE
Grand Cherokee Laredo
Grand Cherolee Limited
ZG=Grand Cherokee European
Y1=Wrangler
X1=Cherokee
Z1=Grand Cherokee
KDX=Vehicles

AR = Use as Required - = Non Illustrated Part P.A.R. = Paint as Required

« RETURN TO GROUP INDEX

EXHAUST SYSTEM 2.5L DIESEL ENGINE ZG BODY (2 OF 2)
Figure 11-150

11–150

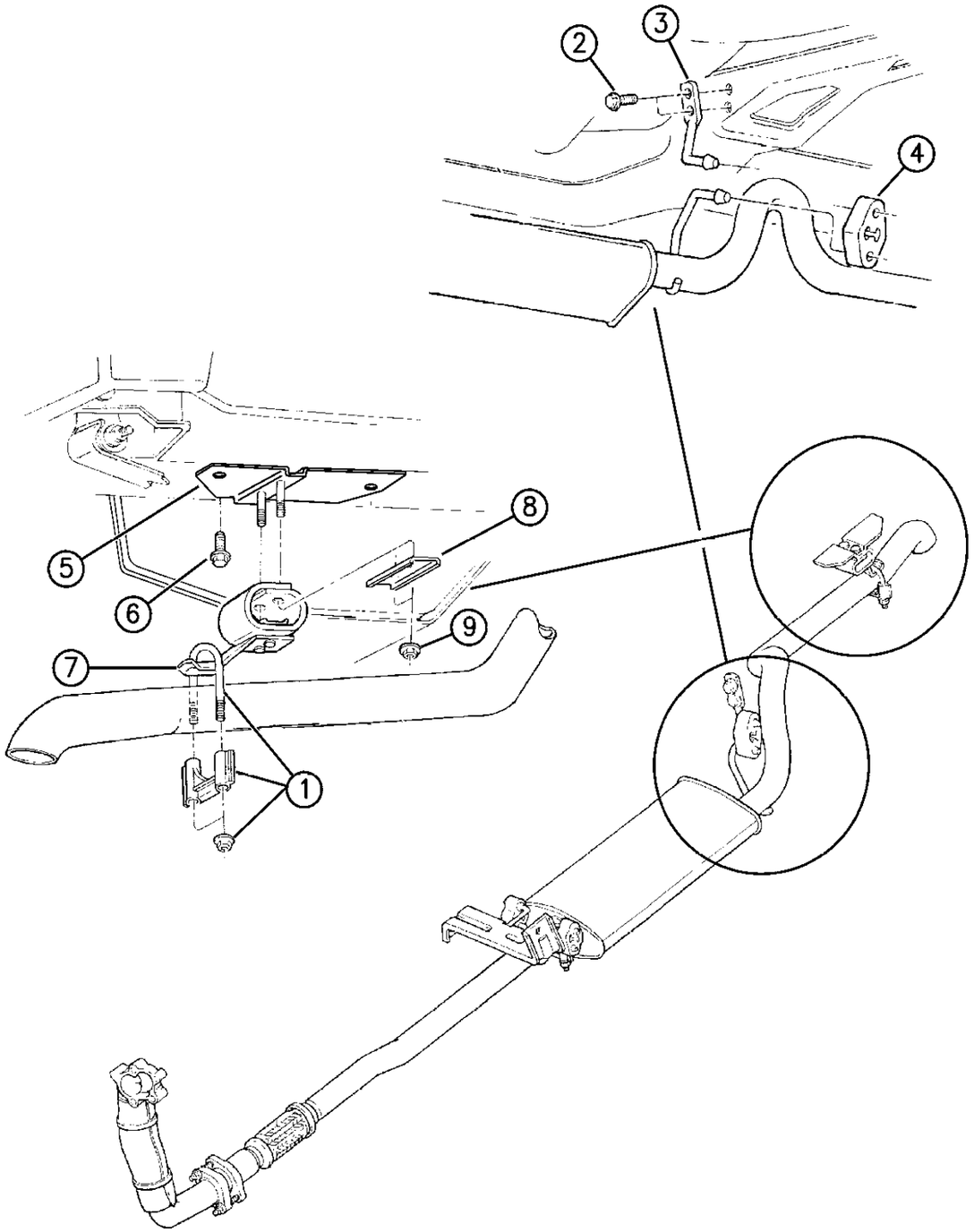

ITEM	PART NUMBER	QTY	BODY	MODEL	DESCRIPTION
1	5200 2144	2			CLAMP
2	J420 0402	2			SCREW
3	5200 2403	1			HANGER, Upper Muffler Support
4	5200 1759	1			ISULATOR ***
5	5200 1511	1			BRACKET, Tailpipe Mtg.
6	3420 1964	2			BOLT
7	5200 2794	1			INSULATOR, w/Bracket, Tailpipe
	5201 7607	1			INSULATOR, Front Hanger
8	J535 8978	1			PLATE
9	3420 1711	2			NUT

MODEL CODES:

72=2 DR Wagon
74=4 DR Wagon
77=Open Body 93" Whlbase
78=Open Body 103" Whlbase - Export
T=2WD
J,N=4WD
U=4WD (RHD)

BODY STYLES:

YJ=Wrangler (4X4) "S"
Weangler (4X4) SE
Wrangler (4X4) Sahara
Wrangler (4X4) Renegade
XJ=Cherokee SE
Cherokee Sport
Cherokee Country
ZJ=Grand Cherokee SE
Grand Cherokee Laredo
Grand Cherolee Limited
ZG=Grand Cherokee European
Y1=Wrangler
X1=Cherokee
Z1=Grand Cherokee
KDX=Vehicles

AR = Use as Required - = Non Illustrated Part P.A.R. = Paint as Required

« RETURN TO GROUP INDEX

SHIELDS, HEAT ZJ BODY
Figure 11-210

11–210

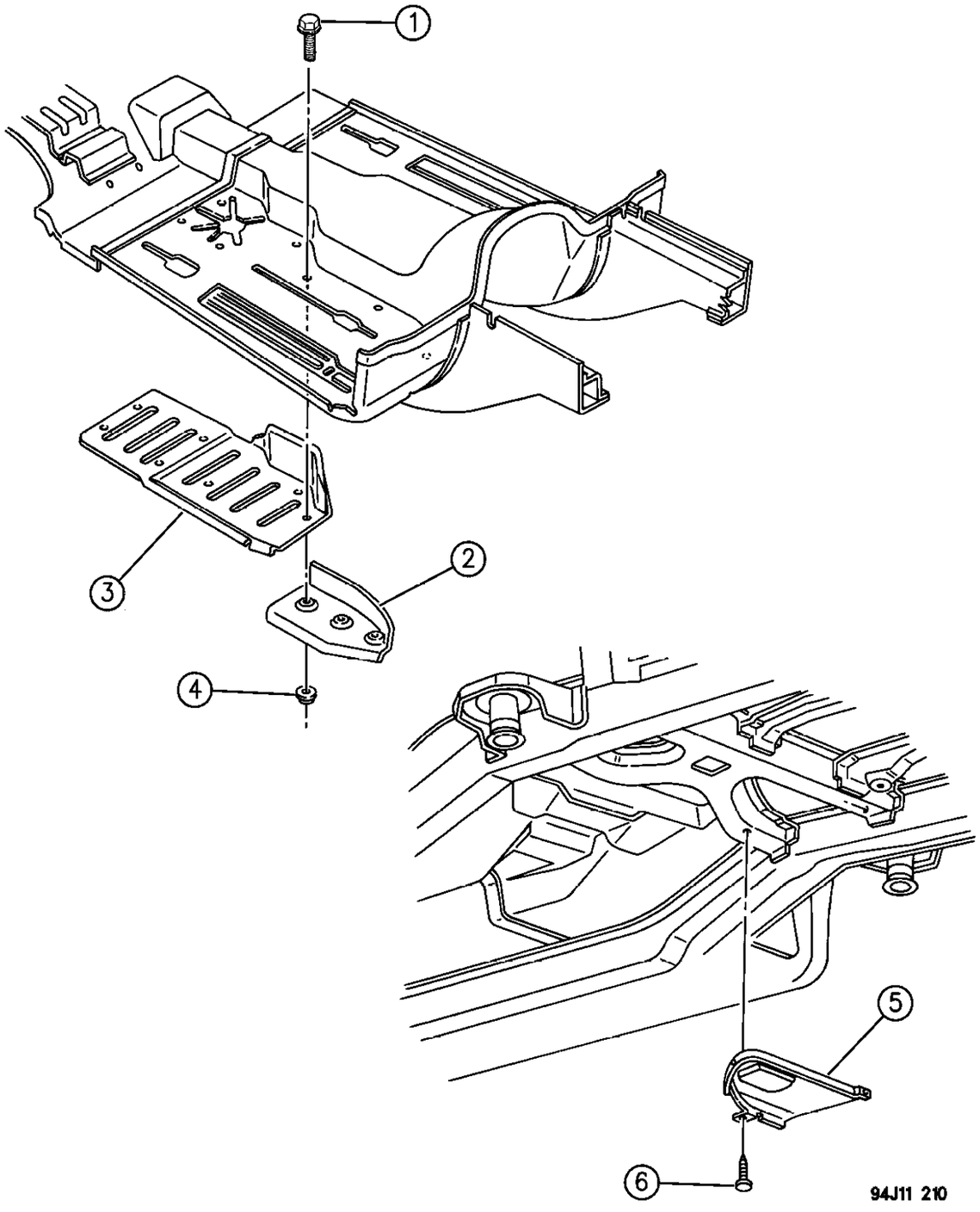

ITEM	PART NUMBER	QTY	BODY	MODEL	DESCRIPTION
1		10			SCREW, (Not Serviced)
2	5529 6097	1			SHIELD, Floor Pan Heat
3	5525 5307	1			SHIELD, Floor Pan Heat, Front
4	0219 462	10			NUT, Shield Attaching
5	5523 4981	1			SHIELD, Heat
6		3			SCREW, (Not Serviced)

MODEL CODES:

72=2 DR Wagon
74=4 DR Wagon
77=Open Body 93" Whlbase
78=Open Body 103" Whlbase - Export
T=2WD
J,N=4WD
U=4WD (RHD)

BODY STYLES:

YJ=Wrangler (4X4) "S"
Weangler (4X4) SE
Wrangler (4X4) Sahara
Wrangler (4X4) Renegade

XJ=Cherokee SE
Cherokee Sport
Cherokee Country

ZJ=Grand Cherokee SE
Grand Cherokee Laredo
Grand Cherolee Limited
ZG=Grand Cherokee European

Y1=Wrangler
X1=Cherokee
Z1=Grand Cherokee
KDX=Vehicles

AR = Use as Required - = Non Illustrated Part P.A.R. = Paint as Required

« RETURN TO GROUP INDEX

SAGIPARTS

GROUP-13
FRAME
BUMPERS OR FASCIA

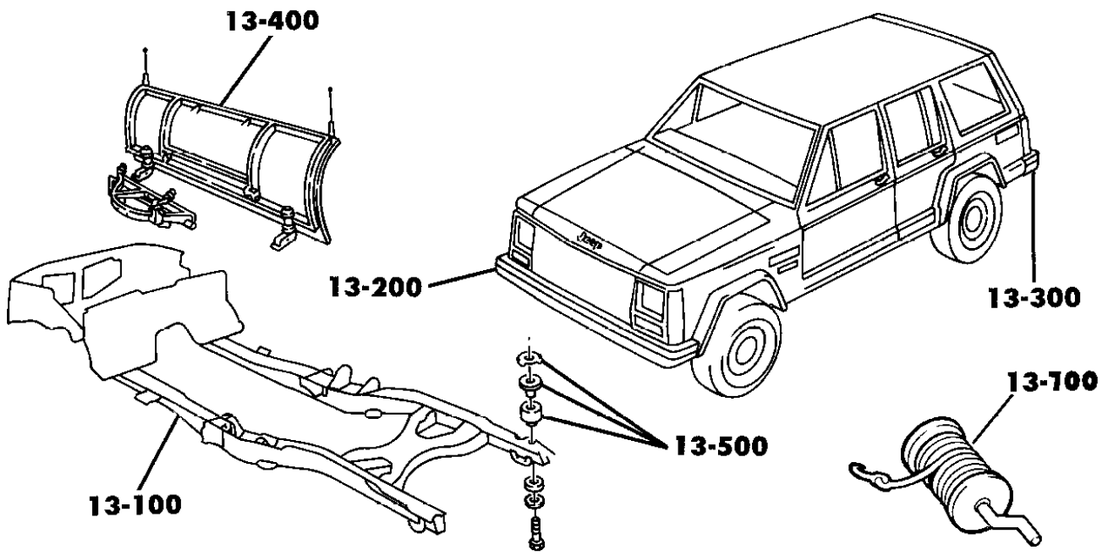

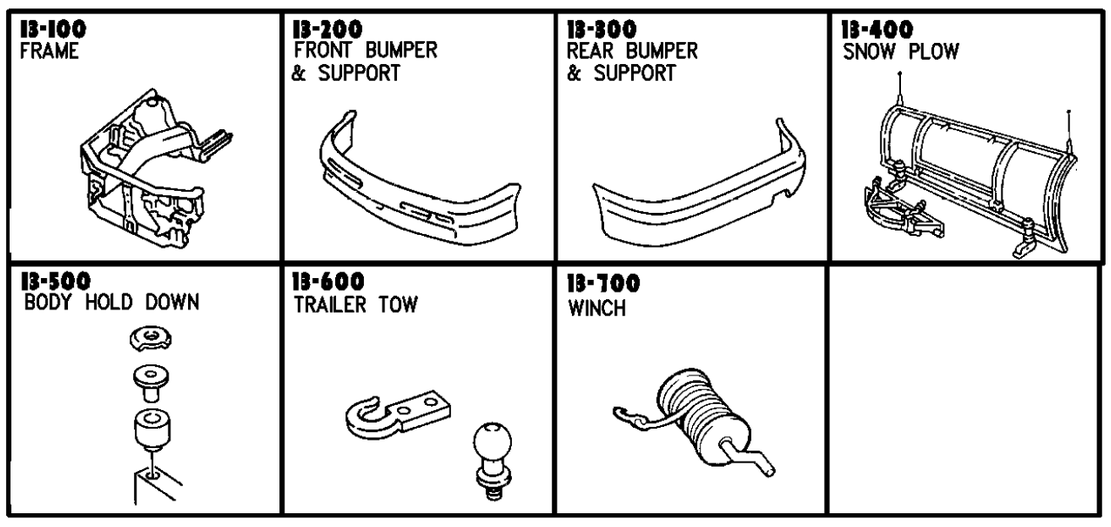

GROUP 13 - FRAME & BUMPERS

ILLUSTRATION TITLE	GROUP-FIG. NO.
FRAME	
FRAME YJ BODY	Fig. 13-110
BUMPER, FRONT	
BUMPER, FRONT YJ BODY	Fig. 13-210
FRONT FASCIA AND SKID PLATE YJ BODY RENEGADE	Fig. 13-220
BUMPER, FRONT XJ BODY	Fig. 13-230
BUMPER, FRONT ZJ, ZG BODY	Fig. 13-240
BUMPER, REAR	
BUMPER, REAR AND DRAW BAR YJ BODY	Fig. 13-310
REAR FASCIA AND SKID PLATE YJ BODY RENEGADE	Fig. 13-320
BUMPER, REAR XJ BODY	Fig. 13-330
BUMPER, REAR ZJ, ZG BODY	Fig. 13-340
SNOW PLOW AND RELATED PARTS	
SNOWPLOW YJ BODY	Fig. 13-410
SNOW PLOW POWER LIFT UNIT YJ, XJ BODY	Fig. 13-420
SNOW PLOW OPERATING CONTROLS AND SWITCHES YJ, XJ BODY	Fig. 13-430
SNOW PLOW MOLDBOARD AND MOUNTING XJ BODY	Fig. 13-440
SNOW PLOW POWER ANGLING CYLINDERS YJ, XJ BODY	Fig. 13-450
MOUNTING, BODY	
BODY MOUNTING HARDWARE YJ BODY	Fig. 13-510
TRAILER TOW	
HARNESS, TRAILER TOWING Y1 BODY	Fig. 13-610
TRAILER HITCH HEAVY DUTY XJ BODY	Fig. 13-620
TRAILER TOWING HITCH ZJ, ZG BODY	Fig. 13-630
TOW HOOKS ZJ, ZG BODY	Fig. 13-640
WINCH AND RELATED PARTS	
HIDDEN WINCH CONTROLS XJ BODY	Fig. 13-710
HIDDEN WINCH MOUNTING XJ BODY	Fig. 13-720
HIDDEN WINCH MOTOR AND DRUM XJ BODY	Fig. 13-730

FRAME YJ BODY
Figure 13-110

13-110C

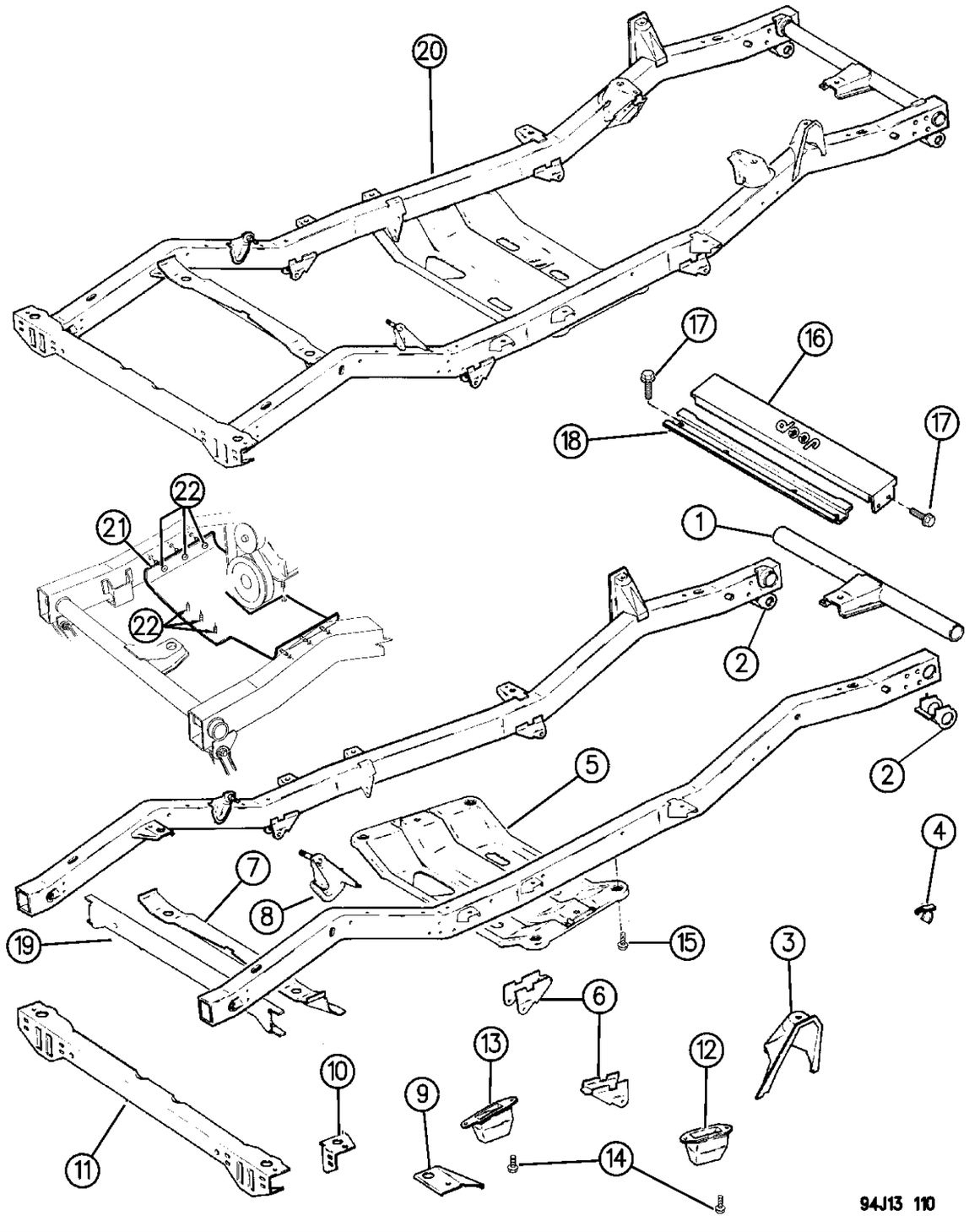

ITEM	PART NUMBER	QTY	BODY	MODEL	DESCRIPTION
1	5204 0315	1			CROSSMEMBER, Front
2	5204 0398	2			BRACKET
3	5204 0325	2			BRACKET
4	5200 2800-1	1			REINFORCEMENT
5	5200 3960	1			SKID PLATE, Trans. Support ***
6	5204 0320	4			BRACKET
7	5204 0338	1			CROSSMEMBER
8	5204 0305	2			BRACKET
9	5200 2006-7	1			GUSSET
10	5200 2644-5	1			REINFORCEMENT
11	5204 0340	1			CROSSMEMBER, Rear
12	5204 0426	1			BUMPER, Axle
13	5204 0007	1			BUMPER, Axle
14	J400 5063	8			SCREW
15	J400 7402	6			BOLT
		6			NUT (DNS)
16	5505 0158	1			COVER
	6030 441	2			FASTENER, Cover
17	J400 6850	6			SCREW
18	5500 7344	1			SUPPORT
19	5200 2727	1			CROSSMEMBER, Fuel Tank, KDX-Egypt, Venezuela
20					FRAME
					2.5L Engine
	5200 6844	1			Except KDX
	5200 6845	1	77		KDX/Egypt
	5200 6847	1	78		KDX/Egypt
					4.0L Engine
	5200 6843	1			Except KDX
	5523 4603	1	77		KDX/Egypt, Venezuela
	5523 4604	1	78		KDX/Egypt, Venezuela
21					SHIELD, Alternator Splash
	5517 4919	1			
	5517 6247	1		Y1	2.5L Engine, RHD
	5517 6246	1		Y1	4.0L Engine, RHD
22	6030 441	AR			FASTENER, Splash Shield
	5517 6248	AR		Y1	RHD

MODEL CODES:

72=2 DR Wagon
74=4 DR Wagon
77=Open Body 93" Whlbase
78=Open Body 103" Whlbase - Export
T=2WD
J,N=4WD
U=4WD (RHD)

BODY STYLES:

YJ=Wrangler (4X4) "S"
Weangler (4X4) SE
Wrangler (4X4) Sahara
Wrangler (4X4) Renegade
XJ=Cherokee SE
Cherokee Sport
Cherokee Country
ZJ=Grand Cherokee SE
Grand Cherokee Laredo
Grand Cherolee Limited
ZG=Grand Cherokee European
Y1=Wrangler
X1=Cherokee
Z1=Grand Cherokee
KDX=Vehicles

AR = Use as Required - = Non Illustrated Part P.A.R. = Paint as Required

« RETURN TO GROUP INDEX

BUMPER, FRONT YJ BODY
Figure 13-210

13-210

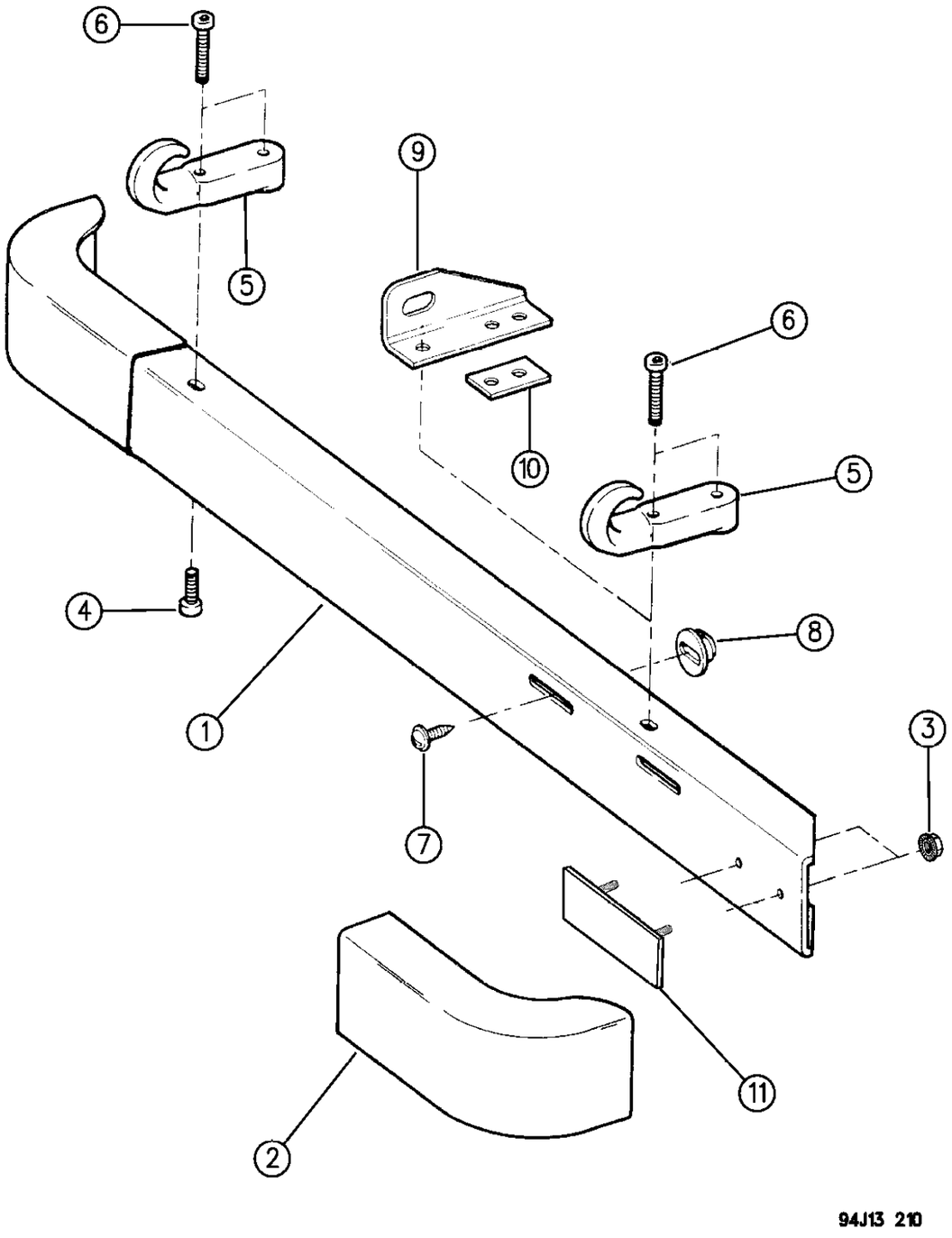

ITEM	PART NUMBER	QTY	BODY	MODEL	DESCRIPTION
1					RAIL, Bumper
	5523 4777	1			Black
	5204 0024	1			Chrome
2	5204 0027	2			EXTENSION, Rail
3	J400 6080	4			NUT
4					BOLT
	J400 7368	4			Black
	J400 7369	4			Chrome
5	5200 3087	2			HOOK, Tow, Black
6	J400 7467	4			BOLT, Black
7	J400 0272	2			SCREW
8	J400 6126	2			NUT
9	5200 3811	1			EYE, Towing ***
-	2128 774	1			WASHER
10	5200 3812	1			SPACER
11	J536 3881	2			PLATE, Bumper Extension Mounting, (Included in Item #2)

MODEL CODES:

72=2 DR Wagon
74=4 DR Wagon
77=Open Body 93" Whlbase
78=Open Body 103" Whlbase - Export
T=2WD
J,N=4WD
U=4WD (RHD)

BODY STYLES:

YJ=Wrangler (4X4) "S"
Weangler (4X4) SE
Wrangler (4X4) Sahara
Wrangler (4X4) Renegade
XJ=Cherokee SE
Cherokee Sport
Cherokee Country
ZJ=Grand Cherokee SE
Grand Cherokee Laredo
Grand Cherolee Limited
ZG=Grand Cherokee European
Y1=Wrangler
X1=Cherokee
Z1=Grand Cherokee
KDX=Vehicles

AR = Use as Required - = Non Illustrated Part P.A.R. = Paint as Required

FRONT FASCIA AND SKID PLATE YJ BODY RENEGADE
Figure 13-220

13-220

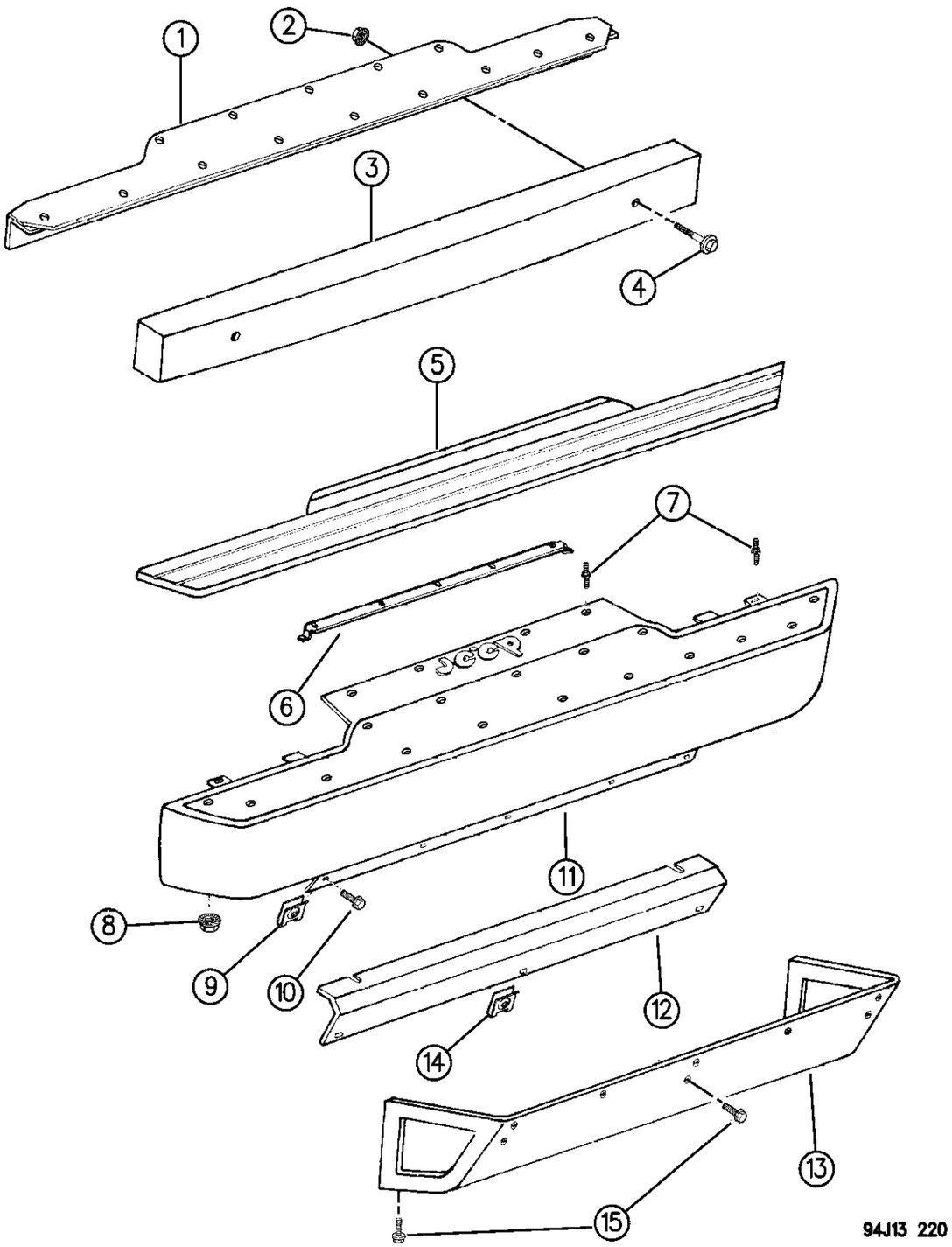

ITEM	PART NUMBER	QTY	BODY	MODEL	DESCRIPTION
1	8350 7234	1			SUPPORT
2	6501 859	2			NUT
3	8350 7235	1			SPACER, (Styrofoam)
4	4638 272	2			BOLT
5	8350 7232	1			STEP PAD
6	4638 135	1			SUPPORT
7	4638 136	7			PIN, Push
8	9420 262	16			WASHER
9	6101 308	5			U-NUT
10	6501 212	5			BOLT
11	8350 7231	1			FASCIA
12	8350 7237	1			BRACKET
13	4728 058	1			PANEL, Lower Close Out
14	6101 283	4			U-NUT
15	6101 453	AR			BOLT

MODEL CODES:

72=2 DR Wagon
74=4 DR Wagon
77=Open Body 93" Whlbase
78=Open Body 103" Whlbase - Export
T=2WD
J,N=4WD
U=4WD (RHD)

BODY STYLES:

YJ=Wrangler (4X4) "S"
Weangler (4X4) SE
Wrangler (4X4) Sahara
Wrangler (4X4) Renegade
XJ=Cherokee SE
Cherokee Sport
Cherokee Country
ZJ=Grand Cherokee SE
Grand Cherokee Laredo
Grand Cherolee Limited
ZG=Grand Cherokee European
Y1=Wrangler
X1=Cherokee
Z1=Grand Cherokee
KDX=Vehicles

AR = Use as Required - = Non Illustrated Part P.A.R. = Paint as Required

« RETURN TO GROUP INDEX

BUMPER, FRONT XJ BODY
Figure 13-230

13-230

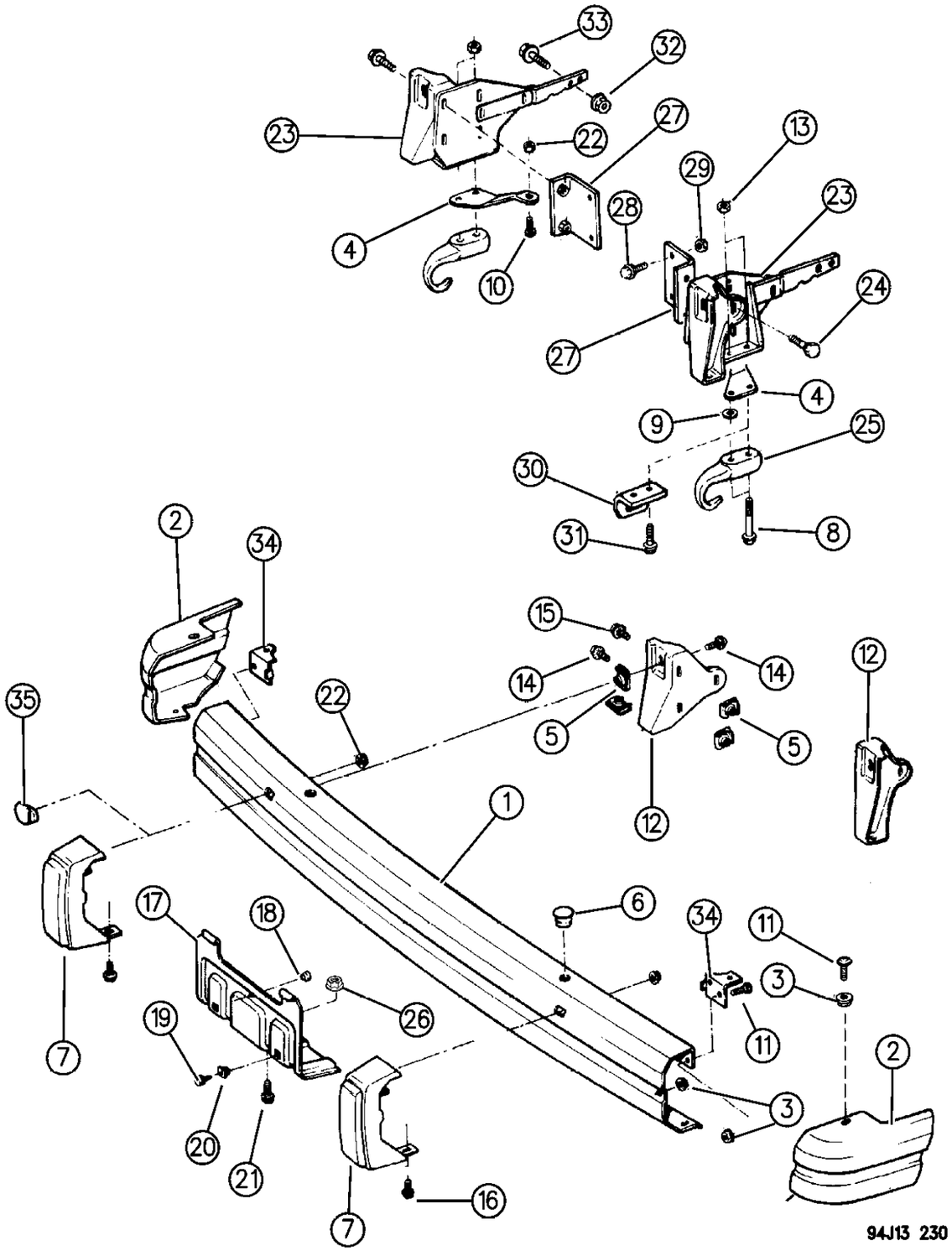

ITEM	PART NUMBER	QTY	BODY	MODEL	DESCRIPTION
1					BAR, Bumper (Mod.Required)
	5523 4551	1			Black (Paint as Required)
	5523 4550	1			Chrome
2					END CAP
	5523 4544-5	1			Black, Grained
	5CU46-7 KX8	1			Black
	5CU46-7 MV4	1			Light Champagne
	5CU46-7 LG5	1			Hunter Green
	5CU46-7 RJN	1			Moss Green
	5CU46-7 KS7	1			Dark Silver
	5CU46-7 MC9	1			Jewel Blue
	5CU46-7 PCJ	1			Montego Blue
	5CU46-7 RV1	1			Pearlstone
	5CU4 6KW7	1			Bright White, Right
	5CU4 7KW7	1			Bright White, Left
	5CU4 6SW1	1			White, Right
	5CU4 7SW1	1			White, Left
3	1150 3750	8			NUT
4	5200 1972-3	1			BRACE
5	1150 0662	8			NUT
6	3420 2321	2			PLUG
7					GUARD, Bumper
	5200 0462	1			Right, Black Grained
	5200 0463	1			Left, Black Grained
	5BG72-3 KW7	1			
8	1150 5098	4			BOLT, w/Toe Hook
9	J400 2086	2			WASHER
10	3420 1596	2			BOLT
11	3420 1809	AR			SCREW
12	5200 0488-9	1			BRACKET, Mounting, w/o Toe Hook/Eye Hook
13	1150 2813	AR			NUT
14	3420 2219	AR			SCREW
15	3420 1540	4			BOLT
16		2			BOLT (DNS M10x1.5-25.00)
17	5200 3479	1			BRACKET, License
18	5200 0457	1			BUMPER, License
19	J812 0054	2			SCREW
20	J400 0141	2			NUT
21	3420 1736	2			BOLT
22	1150 2811	2			NUT
23					BRACKET, Mounting
	5523 4897	1			Right

MODEL CODES:

72=2 DR Wagon
74=4 DR Wagon
77=Open Body 93" Whlbase
78=Open Body 103" Whlbase - Export
T=2WD
J,N=4WD
U=4WD (RHD)

BODY STYLES:

YJ=Wrangler (4X4) "S"
Weangler (4X4) SE
Wrangler (4X4) Sahara
Wrangler (4X4) Renegade
XJ=Cherokee SE
Cherokee Sport
Cherokee Country
ZJ=Grand Cherokee SE
Grand Cherokee Laredo
Grand Cherolee Limited
ZG=Grand Cherokee European
Y1=Wrangler
X1=Cherokee
Z1=Grand Cherokee
KDX=Vehicles

AR = Use as Required - = Non Illustrated Part P.A.R. = Paint as Required

BUMPER, FRONT XJ BODY
Figure 13-230

13-230

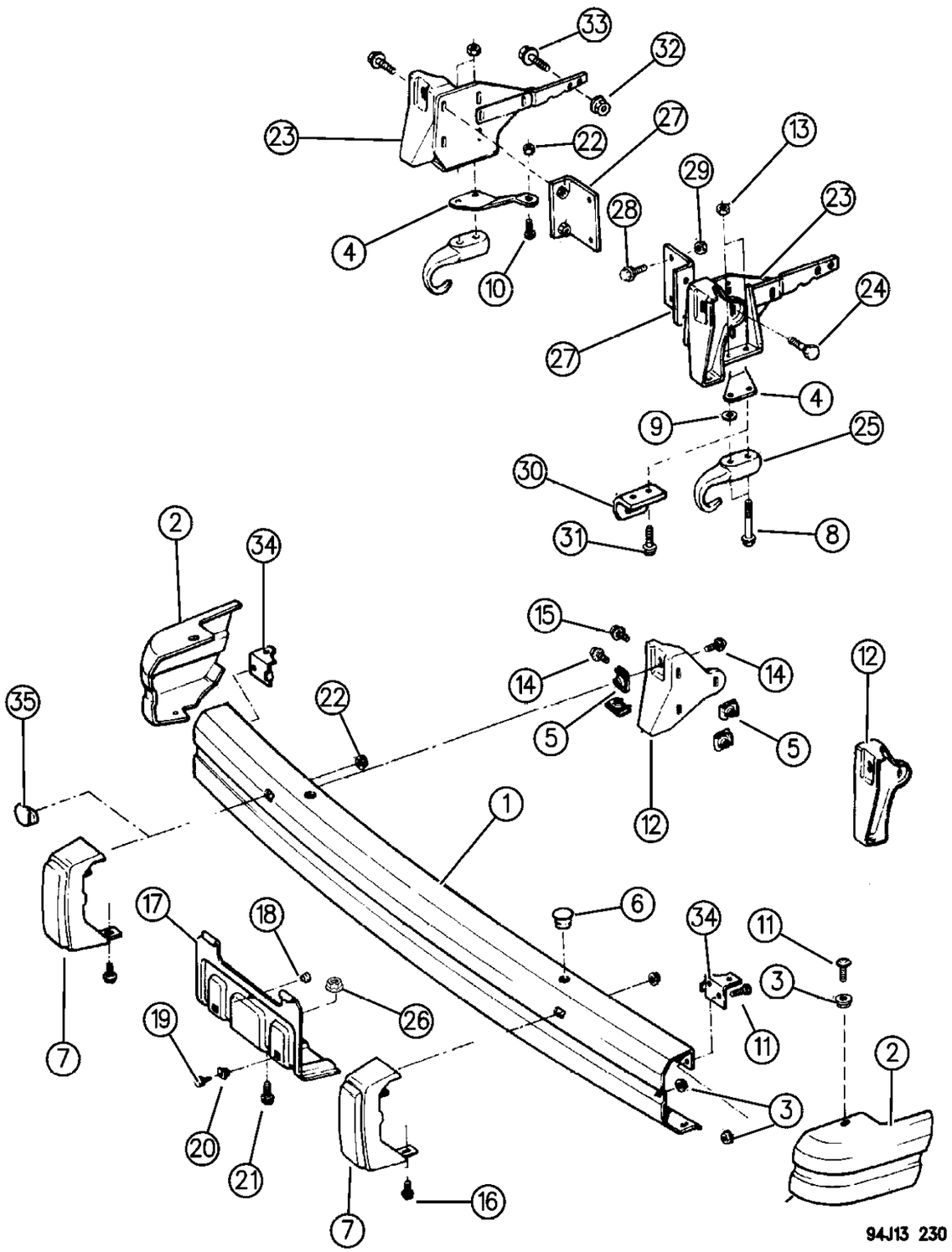

ITEM	PART NUMBER	QTY	BODY	MODEL	DESCRIPTION
	5200 0747	1			Left
24	3420 2219	4			BOLT
25	5200 0710	2			HOOK, Tow
26	1150 2729	2			NUT
27	5200 1976-7	1			BRACKET, Support
28	J420 0434	4			BOLT
29	6502 135	4			NUT
30	5200 1644	1			EYE, Towing ***
31	3420 1389	2			BOLT, w/Toe Eye
32					NUT
	3420 2656	1			Right
	1150 2814	1			Left
33					BOLT
	3420 2661	1			Right
	3420 2388	1			Left
34	5200 2730-1	1			BRACKET, Support
35	3420 2319	2			PLUG

MODEL CODES:

72=2 DR Wagon
74=4 DR Wagon
77=Open Body 93" Whlbase
78=Open Body 103" Whlbase - Export
T=2WD
J,N=4WD
U=4WD (RHD)

BODY STYLES:

YJ=Wrangler (4X4) "S"
Weangler (4X4) SE
Wrangler (4X4) Sahara
Wrangler (4X4) Renegade

XJ=Cherokee SE
Cherokee Sport
Cherokee Country

ZJ=Grand Cherokee SE
Grand Cherokee Laredo
Grand Cherolee Limited
ZG=Grand Cherokee European

Y1=Wrangler
X1=Cherokee
Z1=Grand Cherokee
KDX=Vehicles

AR = Use as Required - = Non Illustrated Part P.A.R. = Paint as Required

BUMPER, FRONT ZJ, ZG BODY
Figure 13-240

13-240

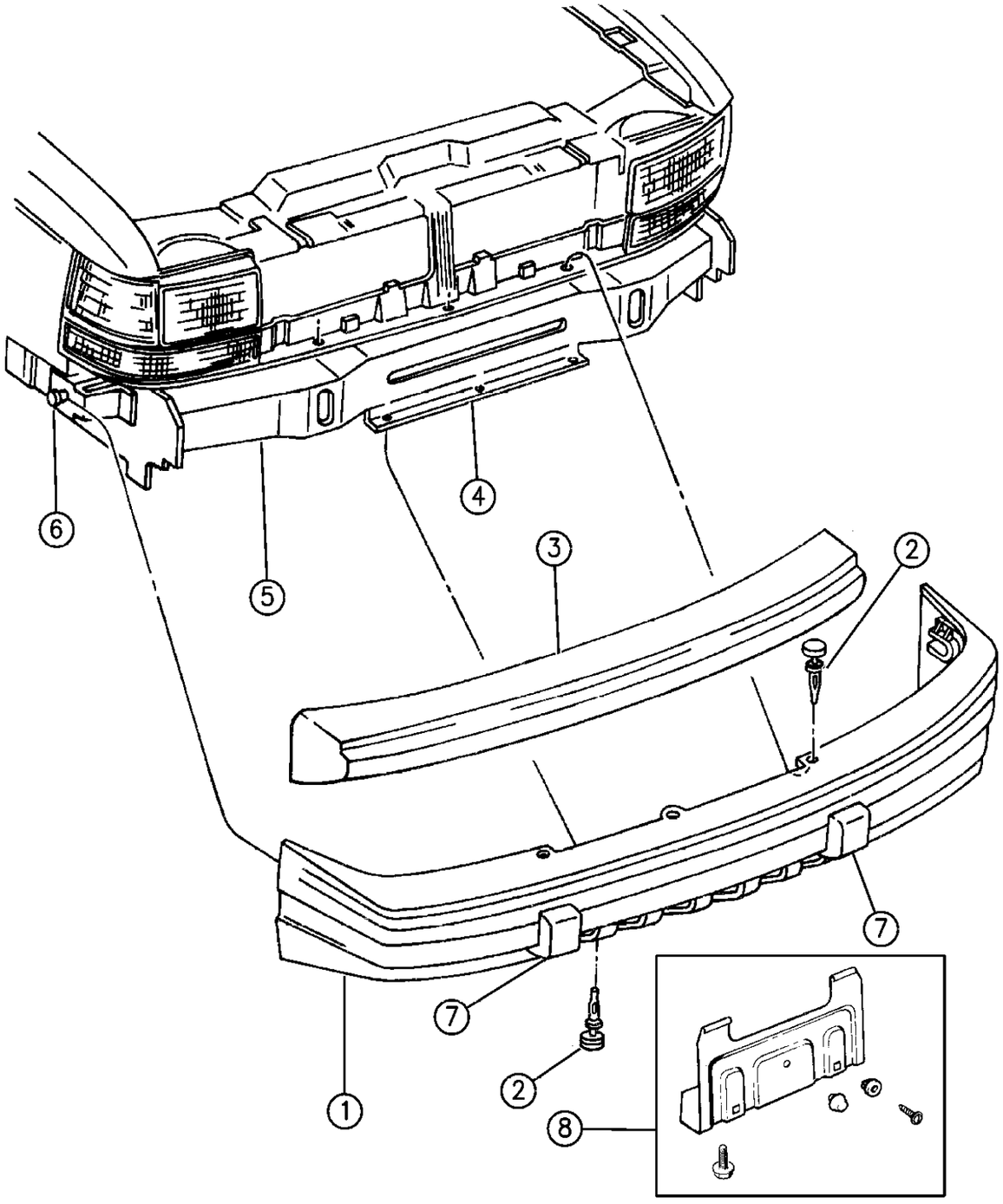

ITEM	PART NUMBER	QTY	BODY	MODEL	DESCRIPTION
1					FASCIA, Front
	4713 455	1			Limited and Orvis Package, w/Fog Lamps, 1994-95
	4798 891	1			1996
	4761 569	1		ZJ	Limited, w/o Fog Lamps
	5AT9 2TZZ	1		ZG,Z1	Limited, w/o Fog Lamps
	5DN6 3SS5	1			Laredo, w/Fog Lamps, 1996
	5DS0 4SS5	1			Laredo, w/o Fog Lamps, 1996
	5503 2684	1			Laredo, w/Nerf Strip, w/Absorber, w/ or w/o Fog Lamps 1994-95
	5DB7 9LS5	1			Sport/Base, w/Nerf Strip, w/Absorber
NOTE: Modification Required					
					PIN, Push
	6503 453	3			Fascia to Bumper
	6503 454	3			Lower
					STRIP, Nerf ***
	5503 1470	1			Bright
	5503 1472	1			Black
	5DL7 0MY2	1			Gold
	5DL7 0RE5	1			Red
2	5BB1 4LS5	6			RETAINER
3					ABSORBER, Front Bumper
	5503 1452	1			1994-95
	5525 5126	1			Limited, 1996
	5529 5483	1			Laredo, 1996
4	5205 7505	1			BRACKET, Fascia Support
	6034 793	1			NUT, w/Spring, Push On
5	5503 1446	1			CROSSMEMBER, Front Lower
6	5525 4700	2			PLATE, Fascia Stud Repair, 1995-7
7					PACKAGE, Bumper Guard W/Limited
	4741 102	1			Rt.
	4741 103	1			Lt.
8					PACKAGE, License Plate
	5523 4902	1			1994-95
	5525 5994	1			1996

MODEL CODES:

72=2 DR Wagon
74=4 DR Wagon
77=Open Body 93" Whlbase
78=Open Body 103" Whlbase - Export
T=2WD
J,N=4WD
U=4WD (RHD)

BODY STYLES:

YJ=Wrangler (4X4) "S"
Weangler (4X4) SE
Wrangler (4X4) Sahara
Wrangler (4X4) Renegade
XJ=Cherokee SE
Cherokee Sport
Cherokee Country
ZJ=Grand Cherokee SE
Grand Cherokee Laredo
Grand Cherolee Limited
ZG=Grand Cherokee European
Y1=Wrangler
X1=Cherokee
Z1=Grand Cherokee
KDX=Vehicles

AR = Use as Required - = Non Illustrated Part P.A.R. = Paint as Required

« RETURN TO GROUP INDEX

BUMPER, REAR AND DRAW BAR YJ BODY
Figure 13-310

13-310

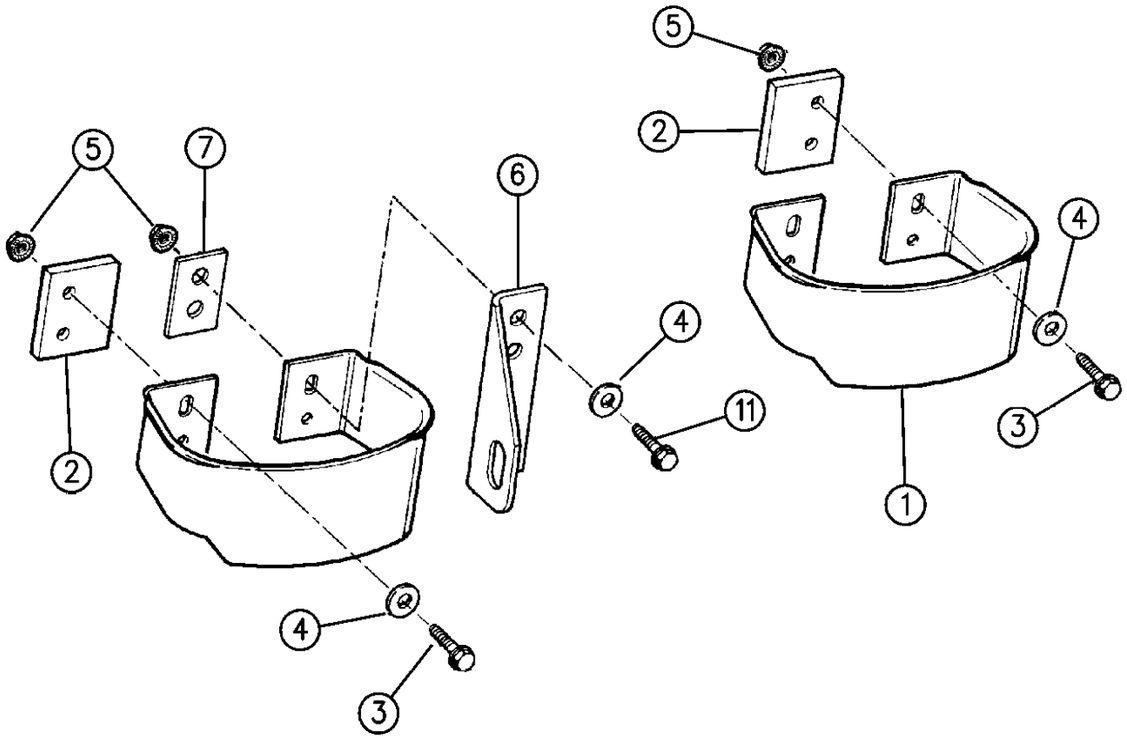

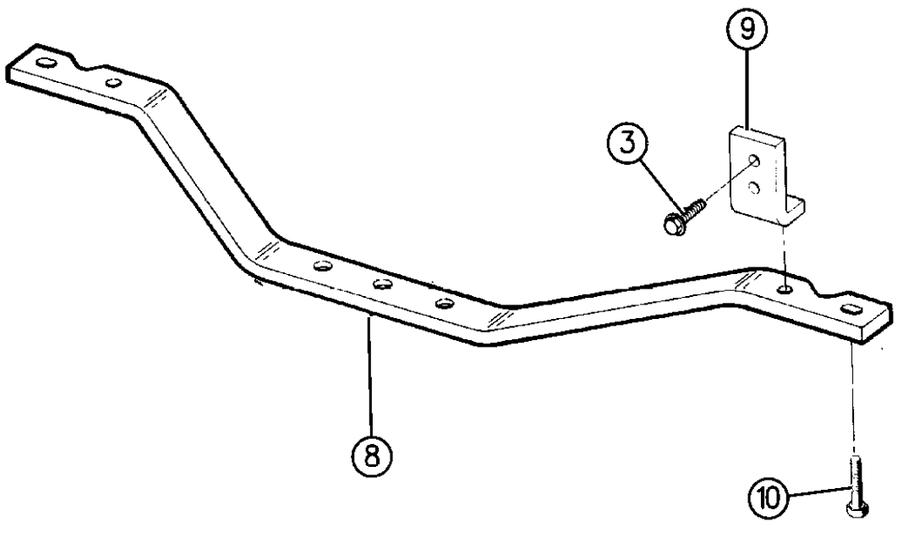

94J13 310

ITEM	PART NUMBER	QTY	BODY	MODEL	DESCRIPTION
1					BUMPERETTE, Rear ***
	4773 058	2			Black, Smooth
	5502 4414	2			Black, Textured
	5502 4415	2			Chrome
2	J535 8680	2			SPACER
3					BOLT
	J942 3533	8			Black
	J400 7211	8			Chrome (1.50")
	J400 7205	8			Chrome (.88")
4	J400 6695	8			WASHER, Laredo
5	J400 4005	8			NUT
6	5200 3811	1			EYE, Towing ***
7	5200 3812	1			SPACER, Left Side Only
8	5204 0013	1			BAR, Draw
9	5204 0014	2			BRACKET
10	J941 9079	2			BOLT
11	J400 7368	2			BOLT

MODEL CODES:

72=2 DR Wagon
74=4 DR Wagon
77=Open Body 93" Whlbase
78=Open Body 103" Whlbase - Export
T=2WD
J,N=4WD
U=4WD (RHD)

BODY STYLES:

YJ=Wrangler (4X4) "S"
Weangler (4X4) SE
Wrangler (4X4) Sahara
Wrangler (4X4) Renegade
XJ=Cherokee SE
Cherokee Sport
Cherokee Country
ZJ=Grand Cherokee SE
Grand Cherokee Laredo
Grand Cherolee Limited
ZG=Grand Cherokee European
Y1=Wrangler
X1=Cherokee
Z1=Grand Cherokee
KDX=Vehicles

AR = Use as Required - = Non Illustrated Part P.A.R. = Paint as Required

« RETURN TO GROUP INDEX

REAR FASCIA AND SKID PLATE YJ BODY RENEGADE
Figure 13-320

13–320

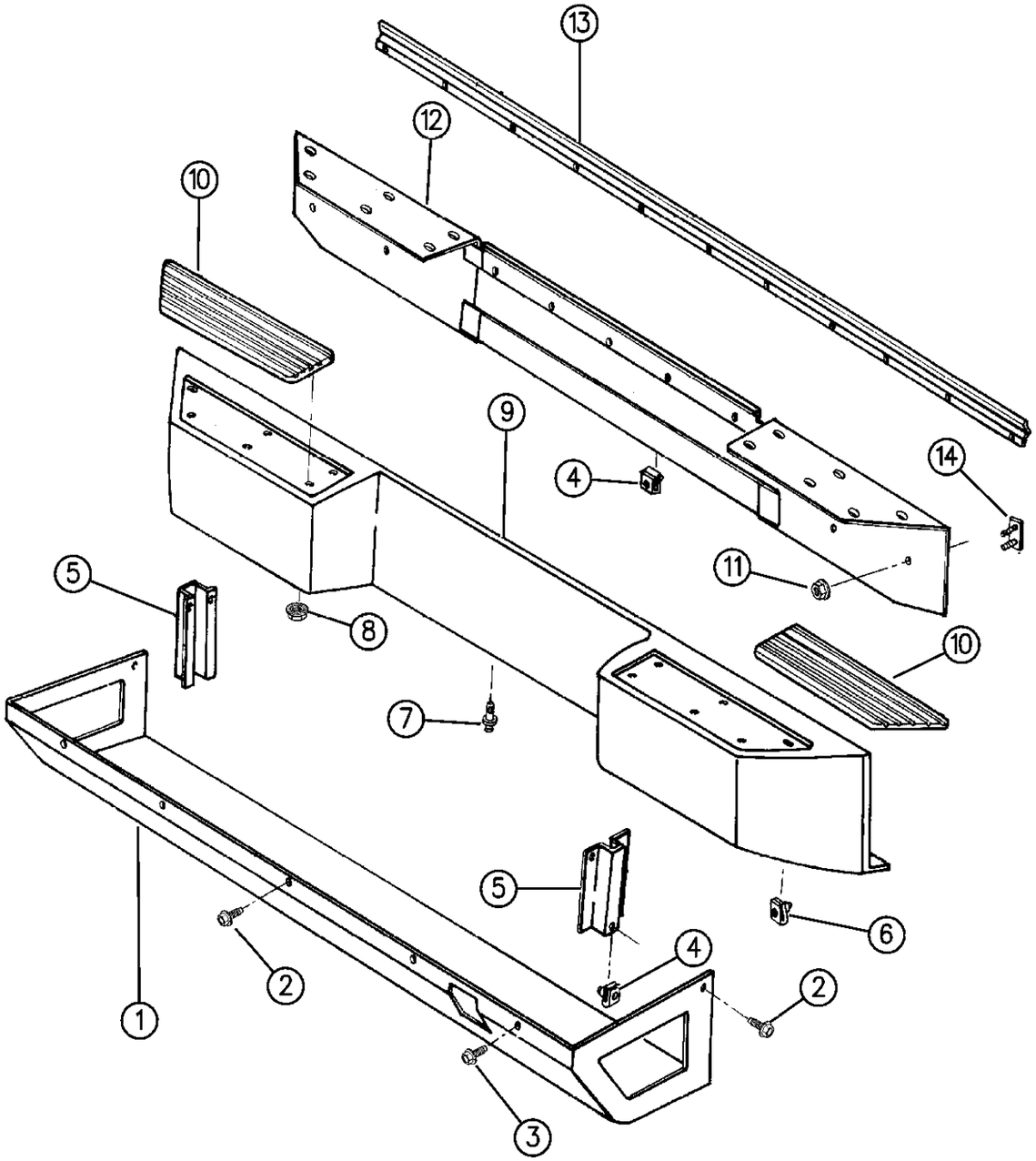

94J13 320

ITEM	PART NUMBER	QTY	BODY	MODEL	DESCRIPTION
1	8350 7246	1			PLATE, Skid
2	6101 453	AR			BOLT
3	6501 212	2			BOLT
4	6101 283	AR			U-NUT
5	8350 7247	2			BRACKET
6	6101 308	2			U-NUT
7	4638 136	AR			PIN, Push
8	9420 262	12			NUT
9	4720 144	1			FASCIA
10	8350 7242-3	1			PAD, Step
11	6101 448	8			NUT
12	8350 7244	1			SUPPORT
13	8350 7241	1			RETAINER
14	8350 7245	4			PLATE, Stud

MODEL CODES:

72=2 DR Wagon
74=4 DR Wagon
77=Open Body 93" Whlbase
78=Open Body 103" Whlbase - Export
T=2WD
J,N=4WD
U=4WD (RHD)

BODY STYLES:

YJ=Wrangler (4X4) "S"
Weangler (4X4) SE
Wrangler (4X4) Sahara
Wrangler (4X4) Renegade

XJ=Cherokee SE
Cherokee Sport
Cherokee Country

ZJ=Grand Cherokee SE
Grand Cherokee Laredo
Grand Cherolee Limited
ZG=Grand Cherokee European

Y1=Wrangler
X1=Cherokee
Z1=Grand Cherokee
KDX=Vehicles

AR = Use as Required - = Non Illustrated Part P.A.R. = Paint as Required

« RETURN TO GROUP INDEX

BUMPER, REAR XJ BODY
Figure 13-330

13–330

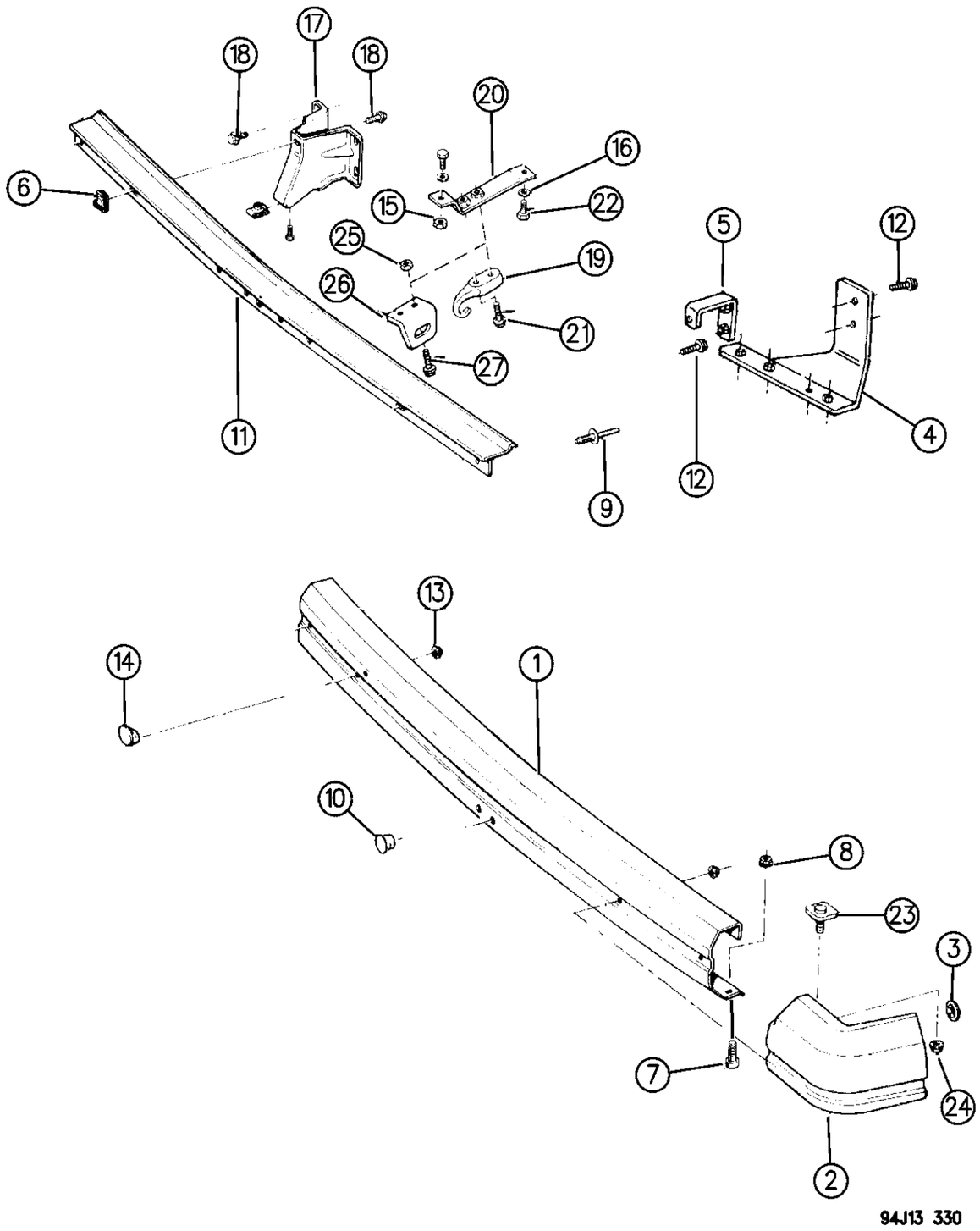

ITEM	PART NUMBER	QTY	BODY	MODEL	DESCRIPTION
1					RAIL, Bumper (Mod. Required)
	5523 4618	1			P.A.R.
	5523 4619	1			Chrome
2					END CAP
	5502 9244-5	1			Black, Grained
	5CP86-7 KX8	1			Black
	5CP86-7 KW7	1			White
	5CP8 6SW1	1			White, Right, 1996
	5CP8 7SW1	1			White, Left, 1996
	5CP86-7 MV4	1			Light Champagne
	5CP86-7 LG5	1			Hunter Green
	5CP86-7 RJN	1			Moss Green
	5CP86-7 KS7	1			Dark Silver
	5CP86-7 MC9	1			Jewel Blue
	5CP86-7 PCJ	1			Montego Blue
	5CP86-7 RV1	1			Pearlstone
3	3420 2014	2			NUT
4	5502 6246	1			REINFORCEMENT
5	5502 6247	1			REINFORCEMENT
6	1150 0662	2			NUT
7	3420 1809	AR			SCREW
8	1150 3750	AR			NUT
9	3420 2855	4			RIVET, Shield to Bumper
10	3420 2320	2			PLUG, Trailer Hitch
11	5502 6542	1			SHIELD, Bumper Rail
12	3420 2467	3			BOLT
13	6101 283	2			NUT
14	3420 2319	2			PLUG
15	1150 1060	2			NUT
16	1150 0257	2			WASHER
17	5502 6265	2			BRACKET, Mounting
18	3420 1540	AR			BOLT
19	5200 0710	1			HOOK, Tow
20	5200 0712	1			BRACKET, Tow
21	1150 4922	1			BOLT
22	3420 1322	2			BOLT
23	6502 693	2			PLATE
24	3420 1918	4			NUT
25	1150 2813	2			NUT
26	5200 1644	1			EYE, Towing ***
27	3420 1389	2			BOLT

MODEL CODES:

72=2 DR Wagon
74=4 DR Wagon
77=Open Body 93" Whlbase
78=Open Body 103" Whlbase - Export
T=2WD
J,N=4WD
U=4WD (RHD)

BODY STYLES:

YJ=Wrangler (4X4) "S"
Weangler (4X4) SE
Wrangler (4X4) Sahara
Wrangler (4X4) Renegade
XJ=Cherokee SE
Cherokee Sport
Cherokee Country
ZJ=Grand Cherokee SE
Grand Cherokee Laredo
Grand Cherolee Limited
ZG=Grand Cherokee European
Y1=Wrangler
X1=Cherokee
Z1=Grand Cherokee
KDX=Vehicles

AR = Use as Required - = Non Illustrated Part P.A.R. = Paint as Required

« RETURN TO GROUP INDEX

BUMPER, REAR ZJ, ZG BODY
Figure 13-340

13–340

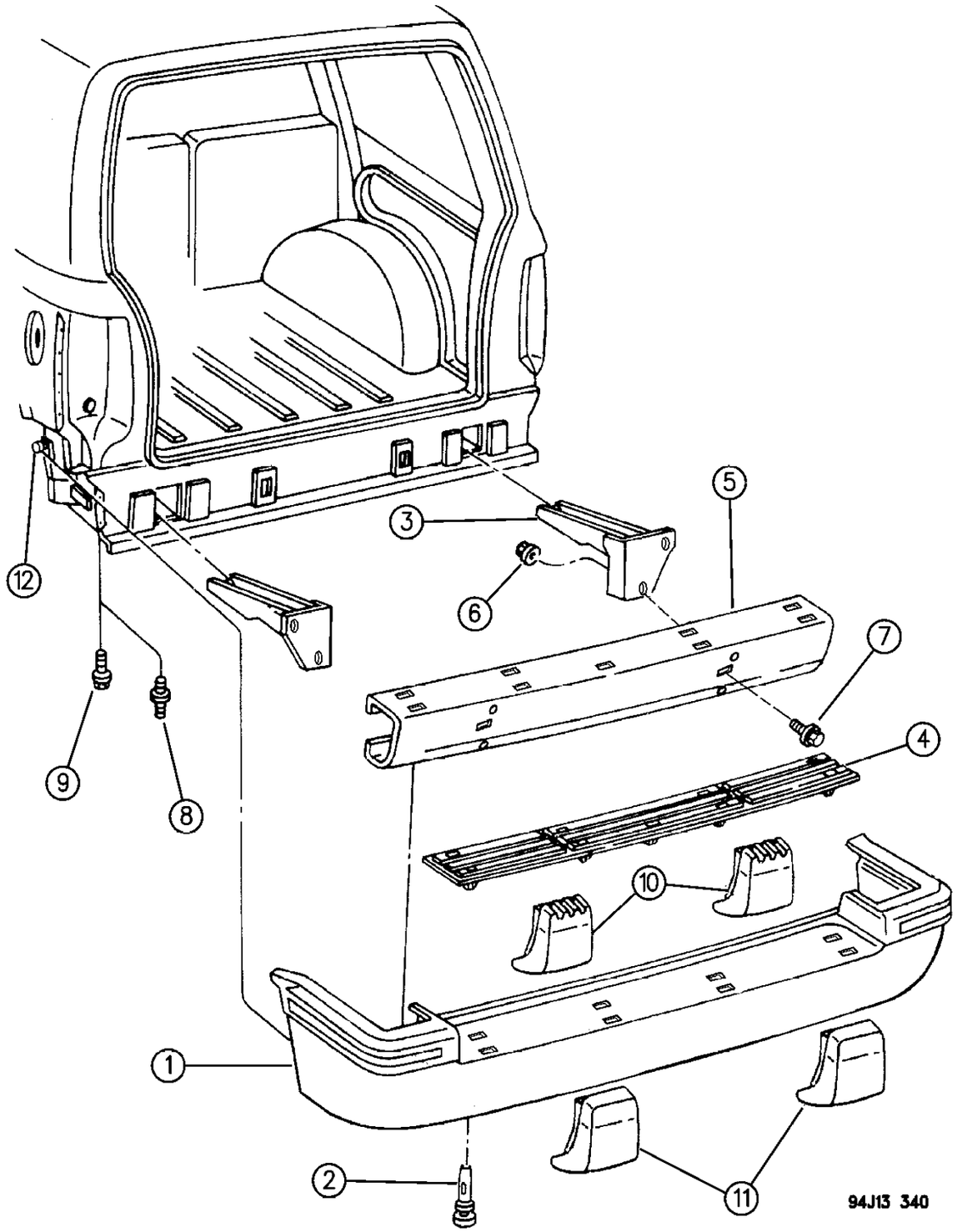

ITEM	PART NUMBER	QTY	BODY	MODEL	DESCRIPTION
1					FASCIA, Rear
	4713 456	1			Limited and Orvis Package, 1994-95
	4798 892	1			Primed, 1996
	5503 2692	1			Laredo, w/Nerf Strip, 1994-95
	5DP6 5SS5	1			Laredo, 1996
	5523 4880	1			Laredo, w/Nerf Strip, EXPORT
	5DC2 3LS5	1			Sport/Base, w/Nerf Strip
	5DN6 6SS5	1	ZG		w/Reflector, Laredo
	5DN6 7SS5	1	ZG		Laredo
	4883 506AA	1	ZG		w/Reflector, Limited, Primed
			ZG		ADAPTOR, Stick-On Reflector
	5262 310	1			Right
	5262 311	1			Left
					STRIP, Nerf ***
	5503 1800	2			Bright
	5503 1796	2			Black
	5523 4883	2			EXPORT
	5DL7 4MY2	2			Gold, w/Limited Package
	5DL7 4RE5	1			Red, w/Limited Package
				ZG	GUARD, Fascia Wheel
	5515 5410	1			Right
	5515 5411	1			Left
2	5BB1 4LS5	4			RETAINER
3					BRACKET, Rear Bumper Mounting
	5503 2082-3	1			Up to 9-13-93
	5523 5152-3	1			After 9-13-93
4	5503 1880	1			PLATE, Scuff, Rear Bumper Step
5					BAR, Rear Bumper
	5529 5453	1			Up to 9-13-93, Stamped 55295452
	5529 5499	1			After 9-13-93
6	6101 283	4			U-NUT
7	6100 584	4			SCREW
8	6503 871	4			STUD, Double End
9	6101 102	4			SCREW
10					ABSORBER
	5523 4974-5	1			1994-95
	5525 5128	2			1996, Limited
	5529 5508	2			1996, Laredo
11	4741 100-1	1			PACKAGE, Bumper Guard
12	5525 4700	2			PLATE, Fascia Stud Repair
	J400 4689	2			NUT, Push In, (License Plate)

MODEL CODES:

72=2 DR Wagon
74=4 DR Wagon
77=Open Body 93" Whlbase
78=Open Body 103" Whlbase - Export
T=2WD
J,N=4WD
U=4WD (RHD)

BODY STYLES:

YJ=Wrangler (4X4) "S"
Weangler (4X4) SE
Wrangler (4X4) Sahara
Wrangler (4X4) Renegade
XJ=Cherokee SE
Cherokee Sport
Cherokee Country
ZJ=Grand Cherokee SE
Grand Cherokee Laredo
Grand Cherolee Limited
ZG=Grand Cherokee European
Y1=Wrangler
X1=Cherokee
Z1=Grand Cherokee
KDX=Vehicles

AR = Use as Required - = Non Illustrated Part P.A.R. = Paint as Required

« RETURN TO GROUP INDEX

SNOWPLOW YJ BODY
Figure 13-410

13-410

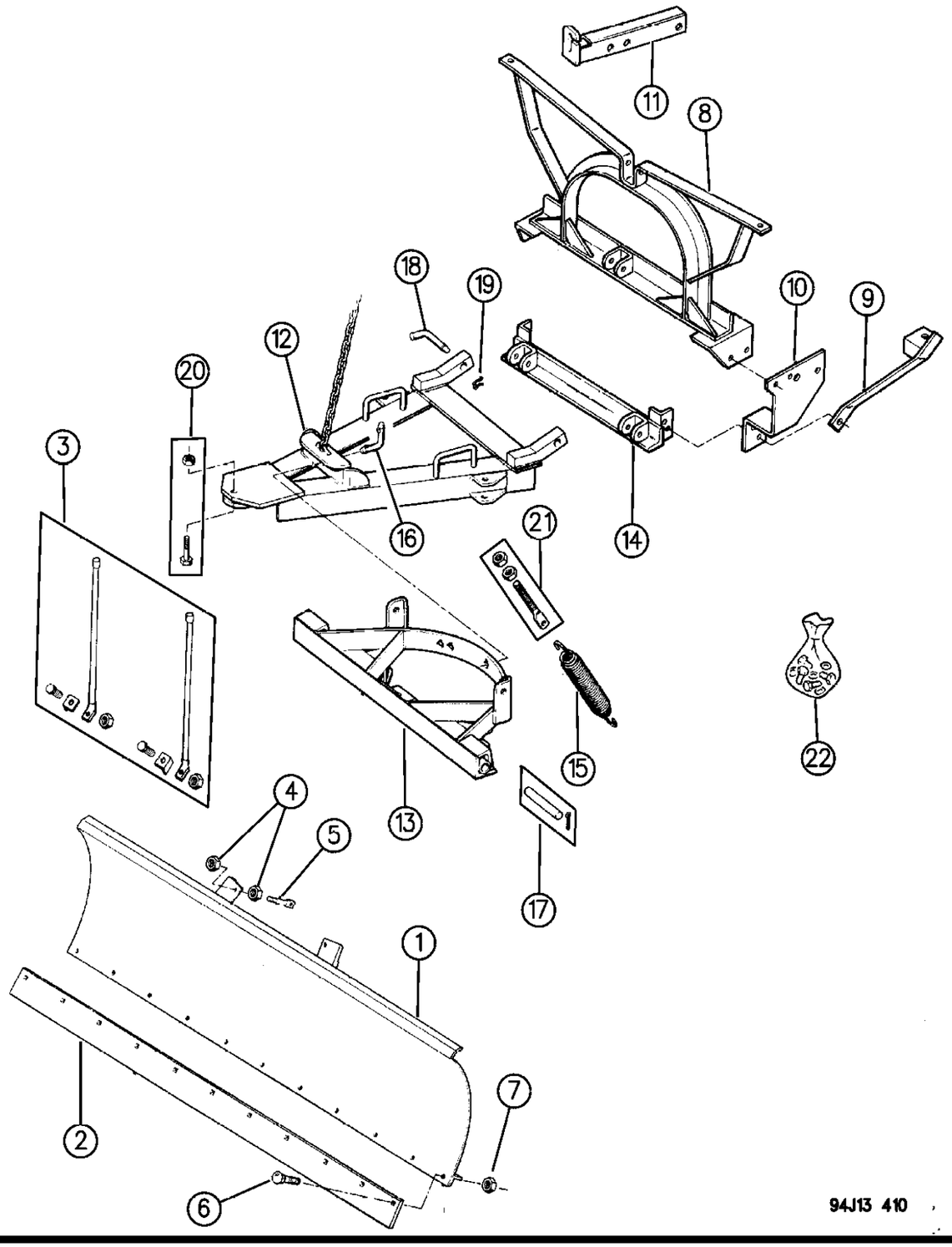

ITEM	PART NUMBER	QTY	BODY	MODEL	DESCRIPTION
1	J200 9158	1			MOLDBOARD ***
2	J200 9131	1			BLADE
3	J200 9916	1			PACKAGE, Plow Marker Insulator
4	J202 0318	16			NUT, Lock
5	J201 2150	2			BOLT
6	J202 1943	AR			BOLT
7	J202 0307	15			NUT, Lock
8	J201 0985	1			FRAME, Plow Lift
9					FRAME, Plow Side
	J201 0987	1			Left
	J201 0988	1			Right
10					PLATE, Plow Side
	J201 0989	1			Left
	J201 0990	1			Right
11	J201 0514	1			ARM, Plow Lift
12	J201 3299	1			A-FRAME, Plow
13	J201 2326	1			SECTOR, Plow ***
14	J201 0986	1			FRAME, Plow Clevis
15	J200 7017	2			SPRING
16	J201 3003	1			PIN, Shear
17	J200 9119	2			PIN, Pivot (w/Cotter Pin)
18	J201 1006	2			PIN, Hinge
19	J202 1984	2			PIN, Cotter
20	J200 9122	1			BOLT, w/Nut
21	J200 9124	3			BOLT, w/Nut
22	J200 8559	1			HARDWARE, Plow Mtg. ***

MODEL CODES:

72=2 DR Wagon
74=4 DR Wagon
77=Open Body 93" Whlbase
78=Open Body 103" Whlbase - Export
T=2WD
J,N=4WD
U=4WD (RHD)

BODY STYLES:

YJ=Wrangler (4X4) "S"
Weangler (4X4) SE
Wrangler (4X4) Sahara
Wrangler (4X4) Renegade
XJ=Cherokee SE
Cherokee Sport
Cherokee Country
ZJ=Grand Cherokee SE
Grand Cherokee Laredo
Grand Cherolee Limited
ZG=Grand Cherokee European
Y1=Wrangler
X1=Cherokee
Z1=Grand Cherokee
KDX=Vehicles

AR = Use as Required - = Non Illustrated Part P.A.R. = Paint as Required

« RETURN TO GROUP INDEX

SNOW PLOW POWER LIFT UNIT YJ, XJ BODY
Figure 13-420

13-420

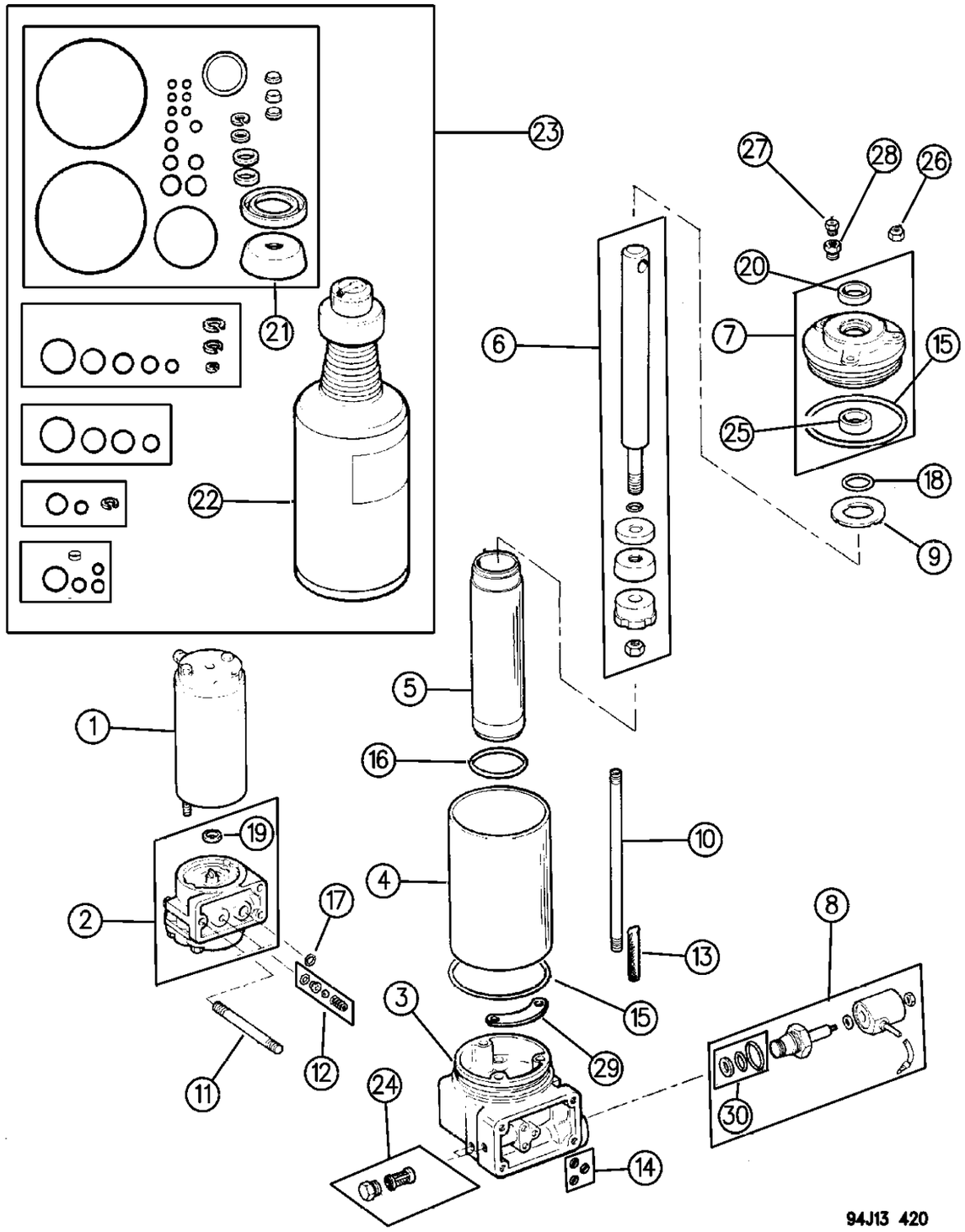

ITEM	PART NUMBER	QTY	BODY	MODEL	DESCRIPTION
1	4026 163	1			MOTOR, Pump
2	4026 164	1			PUMP, Snow Plow Lift
3	4026 170	1			BASE, Lift Cylinder
4	J201 5045	1			TANK, Lift Cylinder ***
5	4026 168	1			CYLINDER, Snow Plow Lift
6	4026 169	1			RAM, Snow PLow Lift
7	J201 5194	1			COVER ASSEMBLY, Lift Cylinder
8	J201 5356	1			SOLENOID, Valve
9	J201 5209	1			WASHER
10	J201 5042	3			STUD
11	J201 5043	3			STUD
12	J201 5574	1			PACKAGE, Check Valve
13	J201 5326	1			STRAINER
14	J201 5122	1			PACKAGE, O-Ring
15	J201 5131	2			O-RING
16	J201 5163	1			O-RING
17	J201 5127	1			O-RING
18	J201 5198	1			O-RING
19	J201 5581	1			SEAL, Pump Shaft
20	J200 5119	1			SEAL, Lift Ram
21	J201 5254	1			PACKAGE, Lift Cylinder Seal
22	J201 5134	1			FLUID, Hydraulic
23	J201 5456	1			PACKAGE, Snow Plow Lift Seal
24					PACKAGE, Filter
	J201 5620	2			.50"
	J201 5641	2			.56"
25	J201 5199	1			SLEEVE, Lift Ram
26	J202 0697	3			NUT, Lock
27	J202 1806	1			VALVE, Pressure Relief
28	J202 1805	1			FITTING, Reducer
29	J201 5621	1			BAFFLE
30					SEAL, Serviced in 23

MODEL CODES:

72=2 DR Wagon
74=4 DR Wagon
77=Open Body 93" Whlbase
78=Open Body 103" Whlbase - Export
T=2WD
J,N=4WD
U=4WD (RHD)

BODY STYLES:

YJ=Wrangler (4X4) "S"
Weangler (4X4) SE
Wrangler (4X4) Sahara
Wrangler (4X4) Renegade

XJ=Cherokee SE
Cherokee Sport
Cherokee Country

ZJ=Grand Cherokee SE
Grand Cherokee Laredo
Grand Cherolee Limited
ZG=Grand Cherokee European

Y1=Wrangler
X1=Cherokee
Z1=Grand Cherokee
KDX=Vehicles

AR = Use as Required - = Non Illustrated Part P.A.R. = Paint as Required

« RETURN TO GROUP INDEX

SNOW PLOW OPERATING CONTROLS AND SWITCHES YJ, XJ BODY
Figure 13-430

13–430

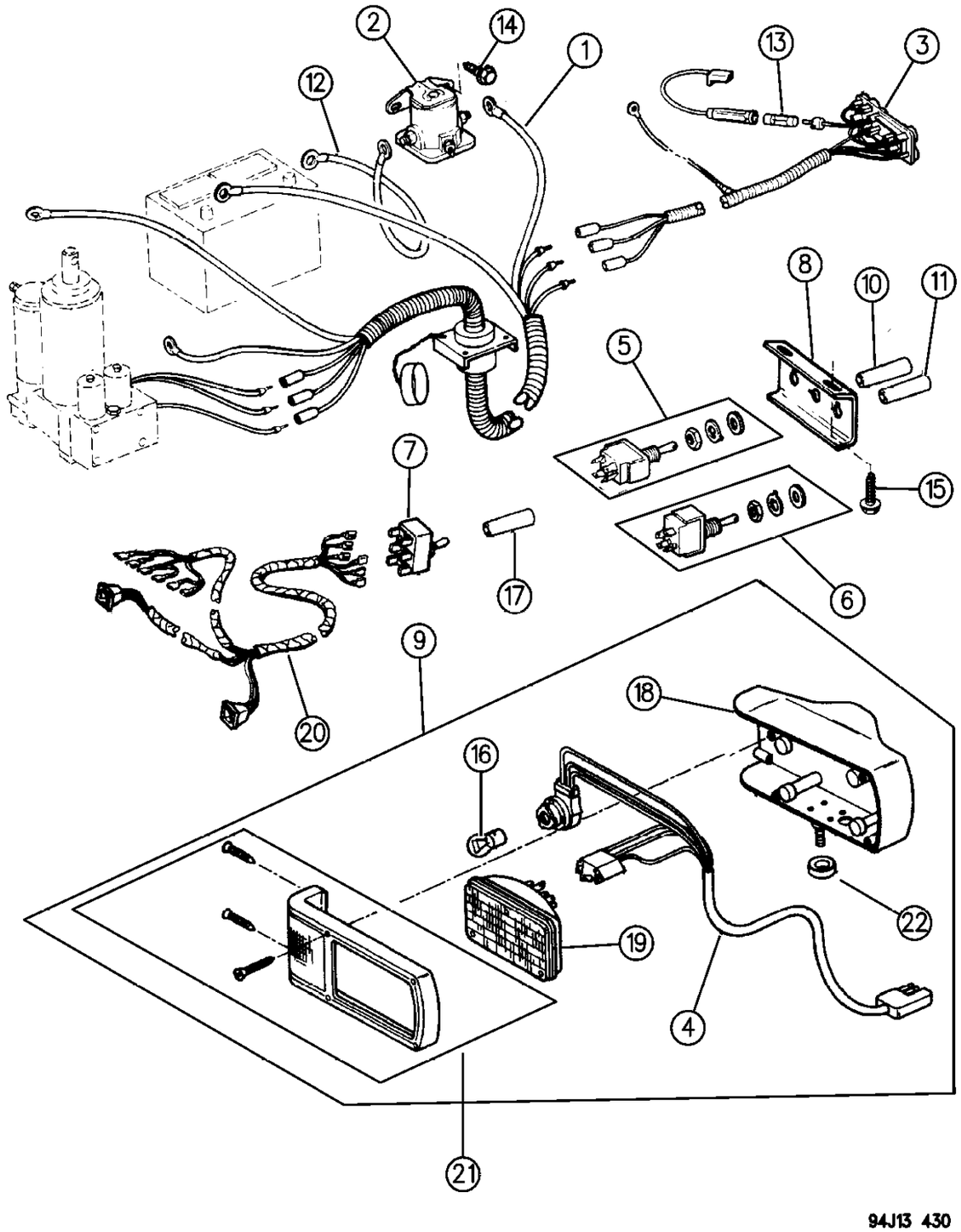

ITEM	PART NUMBER	QTY	BODY	MODEL	DESCRIPTION
1	J200 8470	1			HARNESS, Snow Plow Electrical
2	8330 0049	1			SOLENOID, Snow Plow ***
3	4026 191	1			HARNESS, Snow Plow Electrical
4	8350 5469	1			HARNESS, Auxiliary Headlamp
5	4026 192	1			SWITCH, Snow Plow Angle
6	4162 742	1			SWITCH, Snow Plow Raise/Lower
7	8350 2792	1			SWITCH, Auxiliary Headlamp
8	J201 5656	1			BRACKET, Snow Plow Switch
9					HEADLAMP
	8350 5463	1			Right
	8350 5467	1			Left
10	J201 5376	1			HANDLE, Angle Switch (Black)
11	J201 5375	1			HANDLE, Raise/Lower Switch (Yellow)
12	J200 5024	2			CABLE, Snow Plow Solenoid
13	S010 6653	1			FUSE, 20 Ampere
14	J400 5737	2			SCREW
15	1150 2843	2			SCREW
16	J320 9544	4			BULB, (1157)
17	8350 3178	1			HANDLE, Light Switch (Blue)
18					HOUSING, Auxiliary Headlamp
	8350 5464	1			Right
	8350 5468	1			Left
19	8350 5471	2			BULB, Seal Beam (6054)
20	8350 5469	1			HARNESS, Auxiliary Headlamp
21	8350 5465	2			PACKAGE, Auxiliary Headlamp Bezel
22	8350 5470	2			ADAPTER, Headlamp Ferrule

MODEL CODES:

72=2 DR Wagon
74=4 DR Wagon
77=Open Body 93" Whlbase
78=Open Body 103" Whlbase - Export
T=2WD
J,N=4WD
U=4WD (RHD)

BODY STYLES:

YJ=Wrangler (4X4) "S"
Weangler (4X4) SE
Wrangler (4X4) Sahara
Wrangler (4X4) Renegade
XJ=Cherokee SE
Cherokee Sport
Cherokee Country
ZJ=Grand Cherokee SE
Grand Cherokee Laredo
Grand Cherolee Limited
ZG=Grand Cherokee European
Y1=Wrangler
X1=Cherokee
Z1=Grand Cherokee
KDX=Vehicles

AR = Use as Required - = Non Illustrated Part P.A.R. = Paint as Required

« RETURN TO GROUP INDEX

SNOW PLOW MOLDBOARD AND MOUNTING XJ BODY
Figure 13-440

13-440

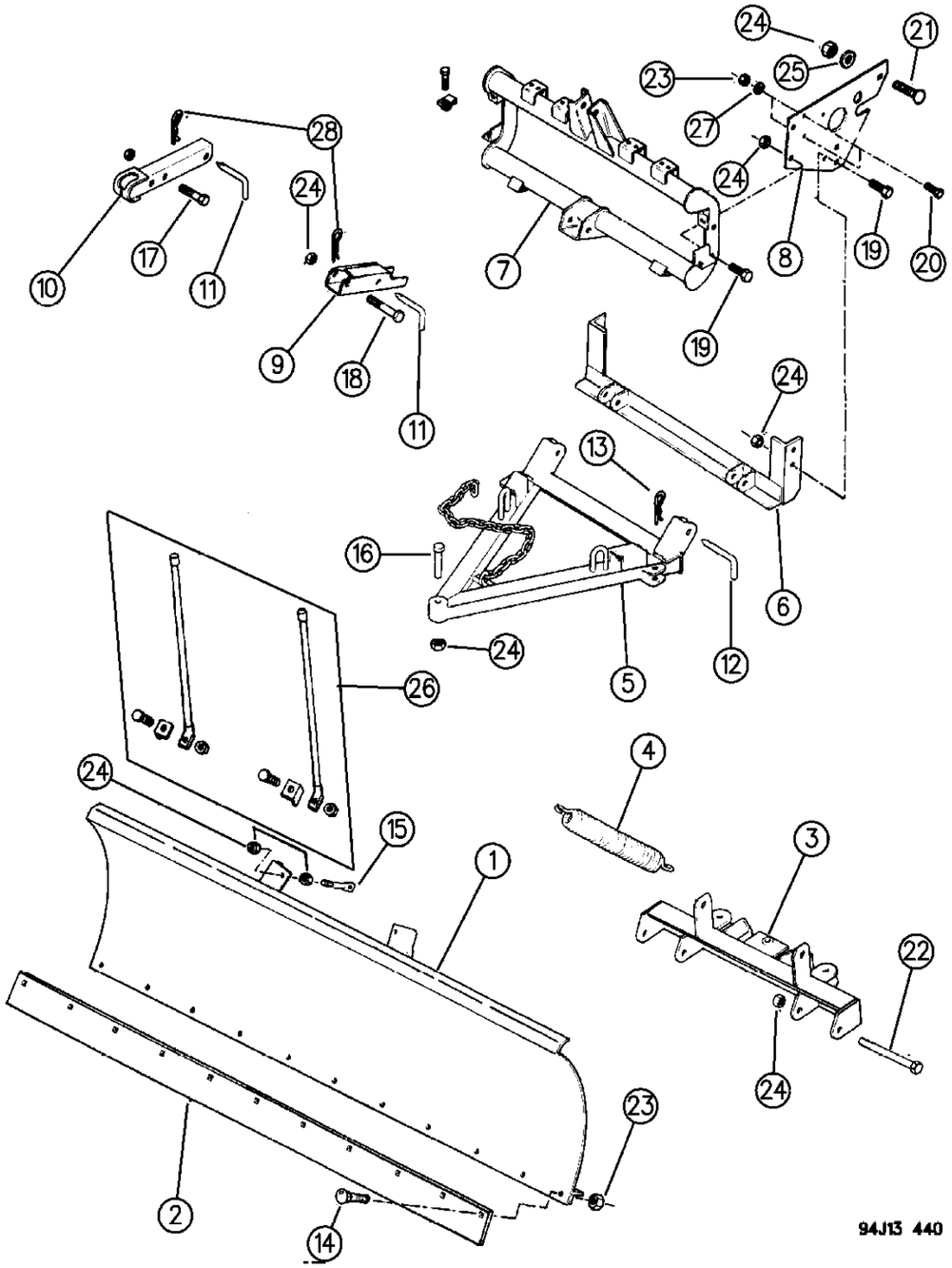

ITEM	PART NUMBER	QTY	BODY	MODEL	DESCRIPTION
1	J260 9102	1			MOLDBOARD ***
2	J200 9100	1			BLADE, Moldboard
3	J201 0891	1			BAR, Snow Plow Pivot
4	J201 2978	2			SPRING, Snow Plow Trip
5	J201 0888	1			A-FRAME, Snow Plow
6	J201 0897	1			FRAME, Snow Plow Clevis
7	J201 0883	1			FRAME, Snow Plow Lift
8	J201 0901	2			PLATE, Side
9	J201 0529	1			ARM, Snow Plow Support
10	3497 294	1			ARM, Snow Plow Lift
11	J201 0538	2			PIN, Quick Disconnect
12	J201 1006	2			PIN, Hinge
13	J202 1984	2			CLIP, Spring
14	J202 1943	11			BOLT
15	J201 2150	2			BOLT
16	J201 3591	1			BOLT
17	J202 0144	1			BOLT
18	S027 1730	1			BOLT
19	J202 0139	8			BOLT
20	S018 0175	4			BOLT
21	J202 0254	2			BOLT
22	J201 3598	2			BOLT
23	J202 0307	15			NUT, Lock
24	J202 0318	16			NUT, Lock
25	J013 1016	2			WASHER, Plain
26	3879 746	1			PACKAGE, Snow Plow Marker Indicator
27	J012 0396	4			WASHER
28	J202 1984	2			PIN, Cotter

MODEL CODES:

72=2 DR Wagon
74=4 DR Wagon
77=Open Body 93" Whlbase
78=Open Body 103" Whlbase - Export
T=2WD
J,N=4WD
U=4WD (RHD)

BODY STYLES:

YJ=Wrangler (4X4) "S"
Weangler (4X4) SE
Wrangler (4X4) Sahara
Wrangler (4X4) Renegade

XJ=Cherokee SE
Cherokee Sport
Cherokee Country

ZJ=Grand Cherokee SE
Grand Cherokee Laredo
Grand Cherolee Limited
ZG=Grand Cherokee European

Y1=Wrangler
X1=Cherokee
Z1=Grand Cherokee
KDX=Vehicles

AR = Use as Required - = Non Illustrated Part P.A.R. = Paint as Required

« RETURN TO GROUP INDEX

SNOW PLOW POWER ANGLING CYLINDERS YJ, XJ BODY
Figure 13-450

13-450

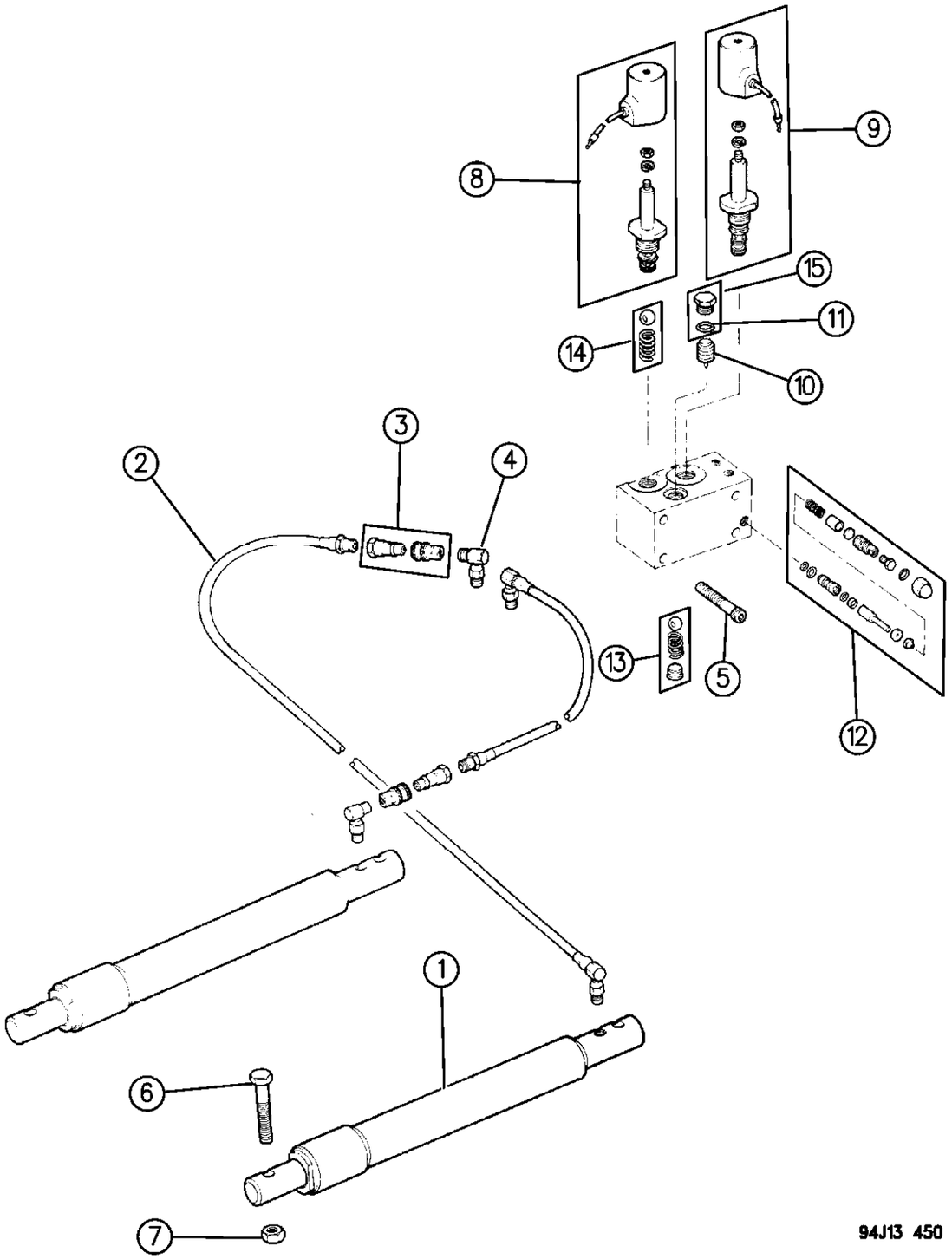

ITEM	PART NUMBER	QTY	BODY	MODEL	DESCRIPTION
1	3632 703	1			RAM, Power Angling
2	J202 1856	1			HOSE
3	J201 5072	2			COUPLING ***
4	J202 1855	2			FITTING, Swivel ***
5	J202 1826	4			SCREW
6	S027 1730	4			BOLT
7	J202 0318	1			SOLENOID, Valve
8	J201 5357	1			SOLENOID, Valve
9	J201 5358	1			SOLENOID, Valve
10	J201 5609	1			PISTON ***
11	J201 5126	1			O-RING ***
12	4026 175	1			PACKAGE, Crossover Valve
13	4026 177	1			PACKAGE, Check Valve
14	J201 5576	1			PACKAGE, Check Valve
15	J201 5359	1			PLUG

MODEL CODES:

72=2 DR Wagon
74=4 DR Wagon
77=Open Body 93" Whlbase
78=Open Body 103" Whlbase - Export
T=2WD
J,N=4WD
U=4WD (RHD)

BODY STYLES:

YJ=Wrangler (4X4) "S"
Weangler (4X4) SE
Wrangler (4X4) Sahara
Wrangler (4X4) Renegade

XJ=Cherokee SE
Cherokee Sport
Cherokee Country

ZJ=Grand Cherokee SE
Grand Cherokee Laredo
Grand Cherolee Limited
ZG=Grand Cherokee European

Y1=Wrangler
X1=Cherokee
Z1=Grand Cherokee
KDX=Vehicles

AR = Use as Required - = Non Illustrated Part P.A.R. = Paint as Required

« RETURN TO GROUP INDEX

BODY MOUNTING HARDWARE YJ BODY
Figure 13-510

13-510

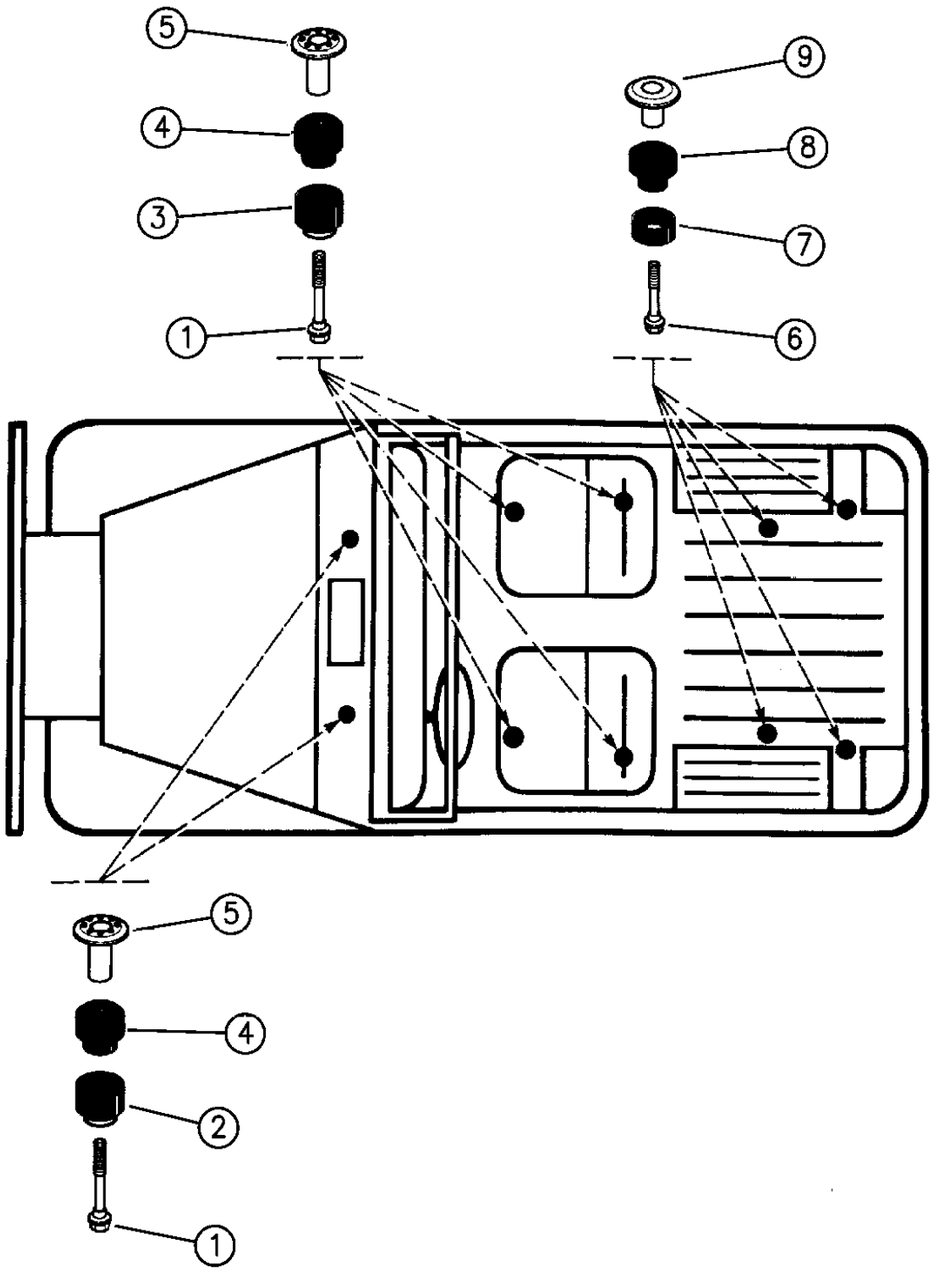

94J13 510

ITEM	PART NUMBER	QTY	BODY	MODEL	DESCRIPTION
1	J400 7571	6			BOLT
2	5200 2723	2			INSULATOR
3	5200 2723	4			INSULATOR
4	5200 2008	6			INSULATOR
5	5200 1961	6			RETAINER
6	J400 7412	4			SCREW
7	5200 2659	4			INSULATOR
8	5200 2660	4			INSULATOR
9	5200 2661	4			RETAINER

MODEL CODES:

72=2 DR Wagon
74=4 DR Wagon
77=Open Body 93" Whlbase
78=Open Body 103" Whlbase - Export
T=2WD
J,N=4WD
U=4WD (RHD)

BODY STYLES:

YJ=Wrangler (4X4) "S"
Weangler (4X4) SE
Wrangler (4X4) Sahara
Wrangler (4X4) Renegade

XJ=Cherokee SE
Cherokee Sport
Cherokee Country

ZJ=Grand Cherokee SE
Grand Cherokee Laredo
Grand Cherolee Limited
ZG=Grand Cherokee European

Y1=Wrangler
X1=Cherokee
Z1=Grand Cherokee
KDX=Vehicles

AR = Use as Required - = Non Illustrated Part P.A.R. = Paint as Required

HARNESS, TRAILER TOWING Y1 BODY
Figure 13-610

13-610

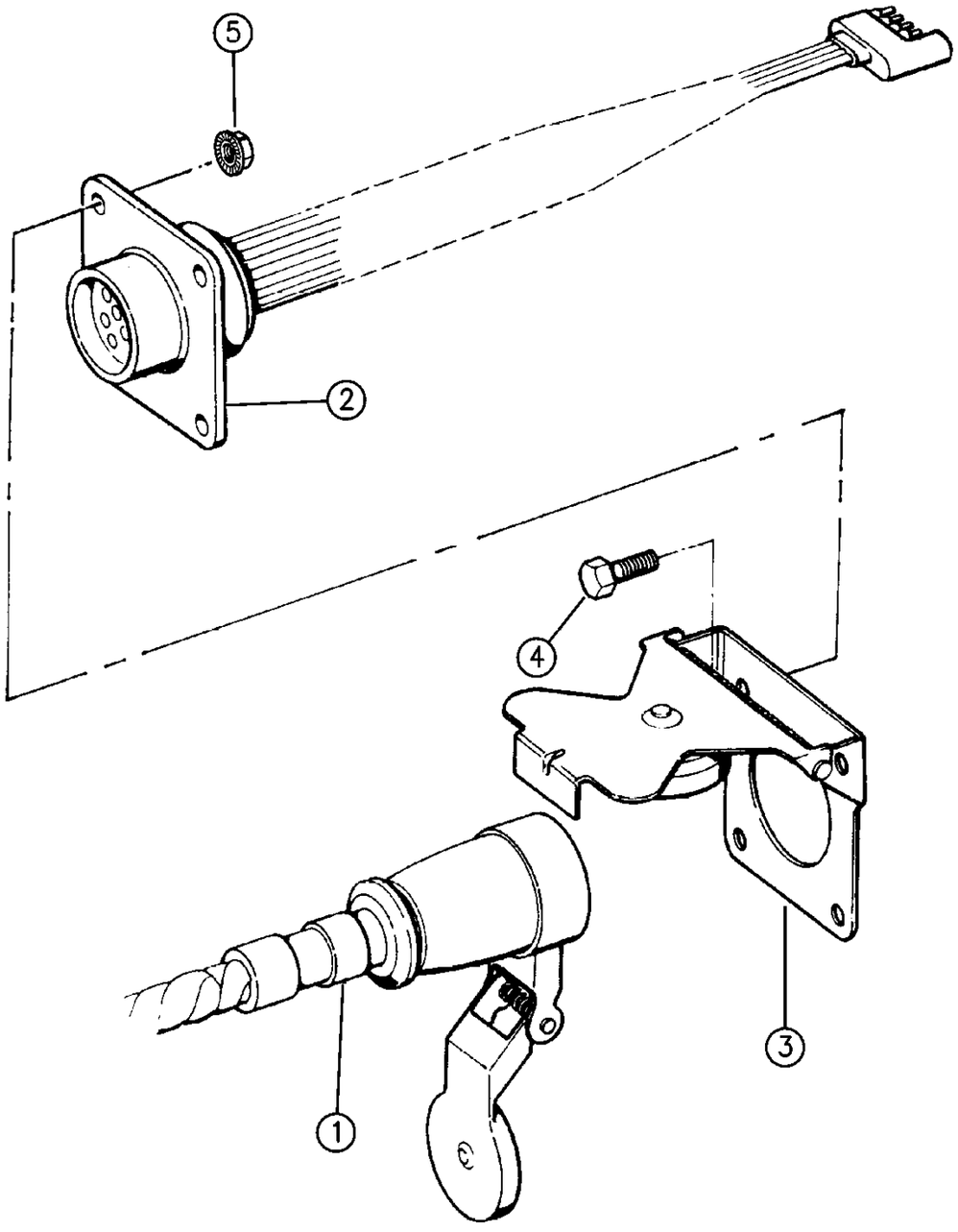

94J13 610

ITEM	PART NUMBER	QTY	BODY	MODEL	DESCRIPTION
1	J805 3178	1			HARNESS, Trailer Towing
2	J805 0600	1			HARNESS, Trailer Towing
3	J773 1428	1			COVER, Trailer Towing
4	J018 0020	4			BOLT
5	J941 6918	4			NUT

MODEL CODES:

72=2 DR Wagon
74=4 DR Wagon
77=Open Body 93" Whlbase
78=Open Body 103" Whlbase - Export
T=2WD
J,N=4WD
U=4WD (RHD)

BODY STYLES:

YJ=Wrangler (4X4) "S"
Weangler (4X4) SE
Wrangler (4X4) Sahara
Wrangler (4X4) Renegade

XJ=Cherokee SE
Cherokee Sport
Cherokee Country

ZJ=Grand Cherokee SE
Grand Cherokee Laredo
Grand Cherolee Limited
ZG=Grand Cherokee European

Y1=Wrangler
X1=Cherokee
Z1=Grand Cherokee
KDX=Vehicles

AR = Use as Required - = Non Illustrated Part P.A.R. = Paint as Required

« RETURN TO GROUP INDEX

TRAILER HITCH HEAVY DUTY XJ BODY
Figure 13-620

13-620B

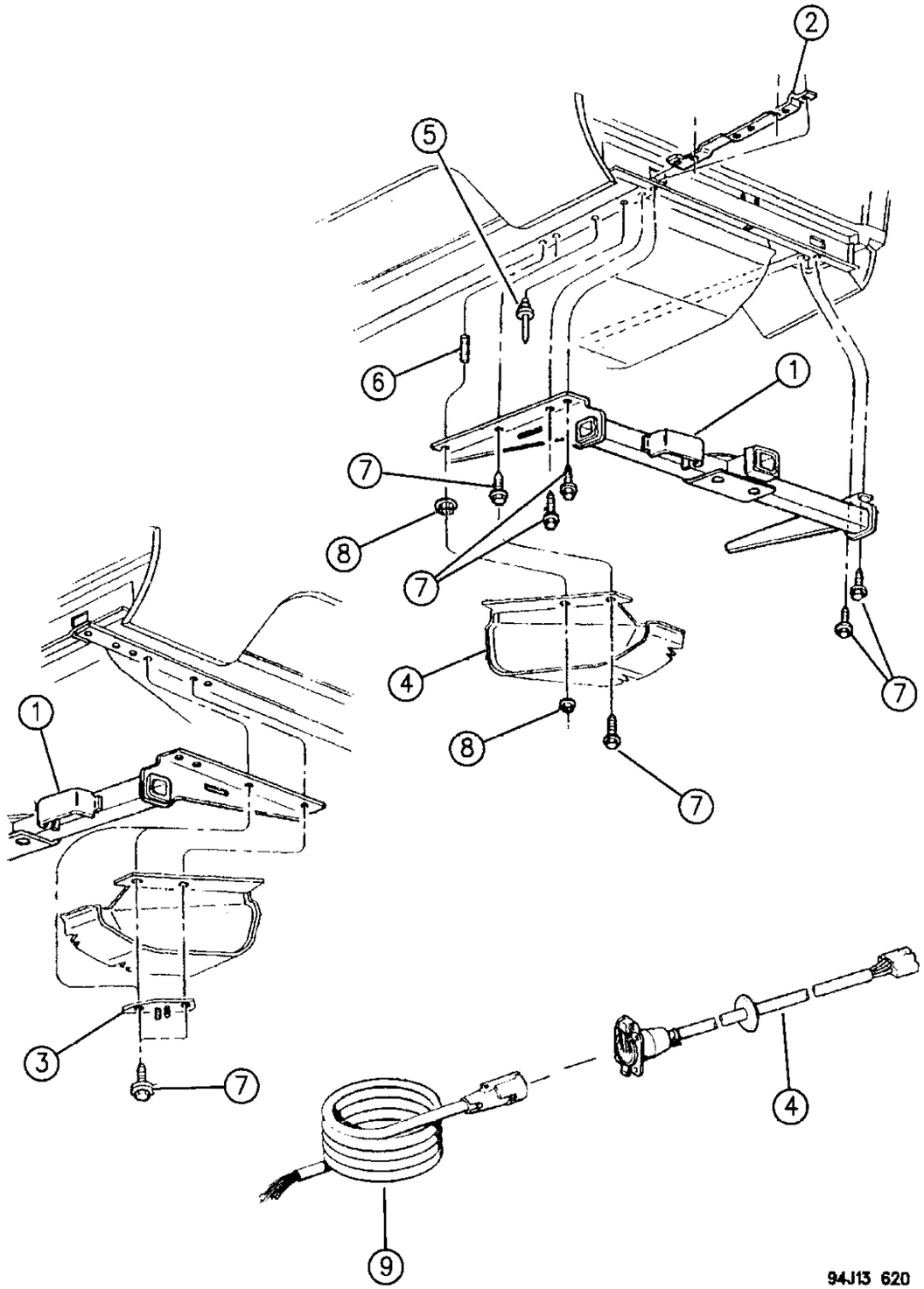

ITEM	PART NUMBER	QTY	BODY	MODEL	DESCRIPTION
1	5205 8266	1			HITCH, Trailer ***
2	5200 1174-5	1			REINFORCEMENT
3	5200 1511	1			BRACKET, Exhaust Hanger
4	5601 8483	1			HARNESS, Body (7 Way)
5	3420 1353	4			RIVET, Blind
6	3420 2742	2			STUD, Double End
7	3420 1964	6			BOLT
8	1150 2813	2			NUT
9	8240 0554	1			HARNESS, Trailer

MODEL CODES:

72=2 DR Wagon
74=4 DR Wagon
77=Open Body 93" Whlbase
78=Open Body 103" Whlbase - Export
T=2WD
J,N=4WD
U=4WD (RHD)

BODY STYLES:

YJ=Wrangler (4X4) "S"
Weangler (4X4) SE
Wrangler (4X4) Sahara
Wrangler (4X4) Renegade

XJ=Cherokee SE
Cherokee Sport
Cherokee Country

ZJ=Grand Cherokee SE
Grand Cherokee Laredo
Grand Cherolee Limited
ZG=Grand Cherokee European

Y1=Wrangler
X1=Cherokee
Z1=Grand Cherokee
KDX=Vehicles

AR = Use as Required - = Non Illustrated Part P.A.R. = Paint as Required

« RETURN TO GROUP INDEX

TRAILER TOWING HITCH ZJ, ZG BODY
Figure 13-630

13-630

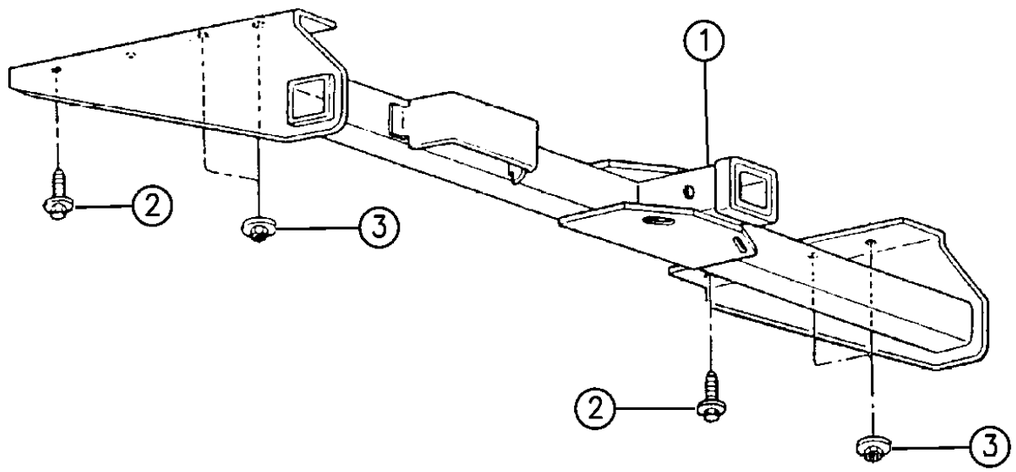

94J13 630

ITEM	PART NUMBER	QTY	BODY	MODEL	DESCRIPTION
1	5205 8265	1			HITCH, Trailer ***
2	6101 102	2			BOLT
3	6100 056	4			NUT

MODEL CODES:

72=2 DR Wagon
74=4 DR Wagon
77=Open Body 93" Whlbase
78=Open Body 103" Whlbase - Export
T=2WD
J,N=4WD
U=4WD (RHD)

BODY STYLES:

YJ=Wrangler (4X4) "S"
Weangler (4X4) SE
Wrangler (4X4) Sahara
Wrangler (4X4) Renegade

XJ=Cherokee SE
Cherokee Sport
Cherokee Country

ZJ=Grand Cherokee SE
Grand Cherokee Laredo
Grand Cherolee Limited
ZG=Grand Cherokee European

Y1=Wrangler
X1=Cherokee
Z1=Grand Cherokee
KDX=Vehicles

AR = Use as Required - = Non Illustrated Part P.A.R. = Paint as Required

TOW HOOKS ZJ, ZG BODY
Figure 13-640

13-640

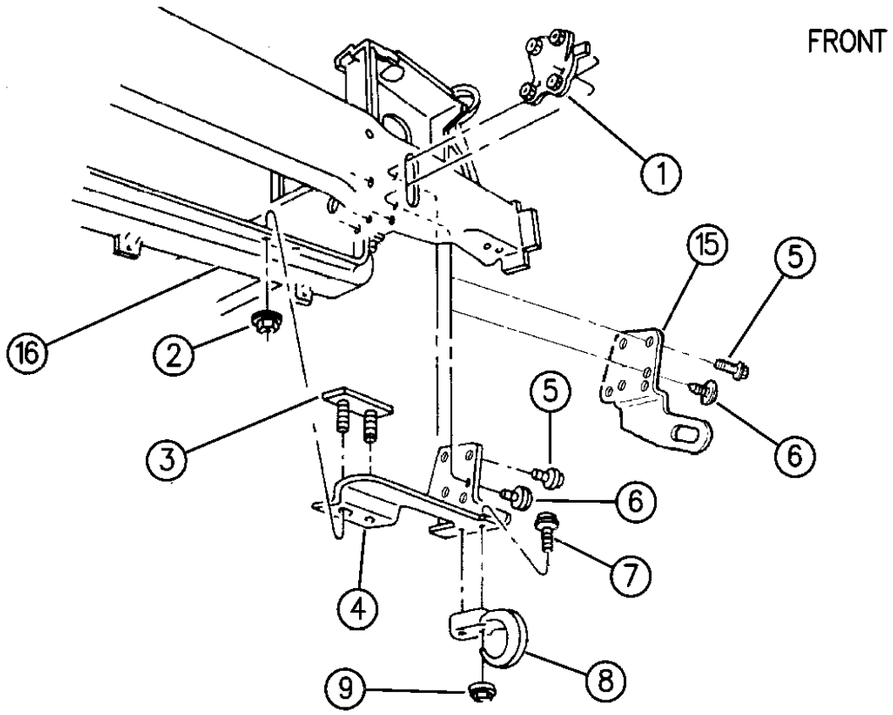

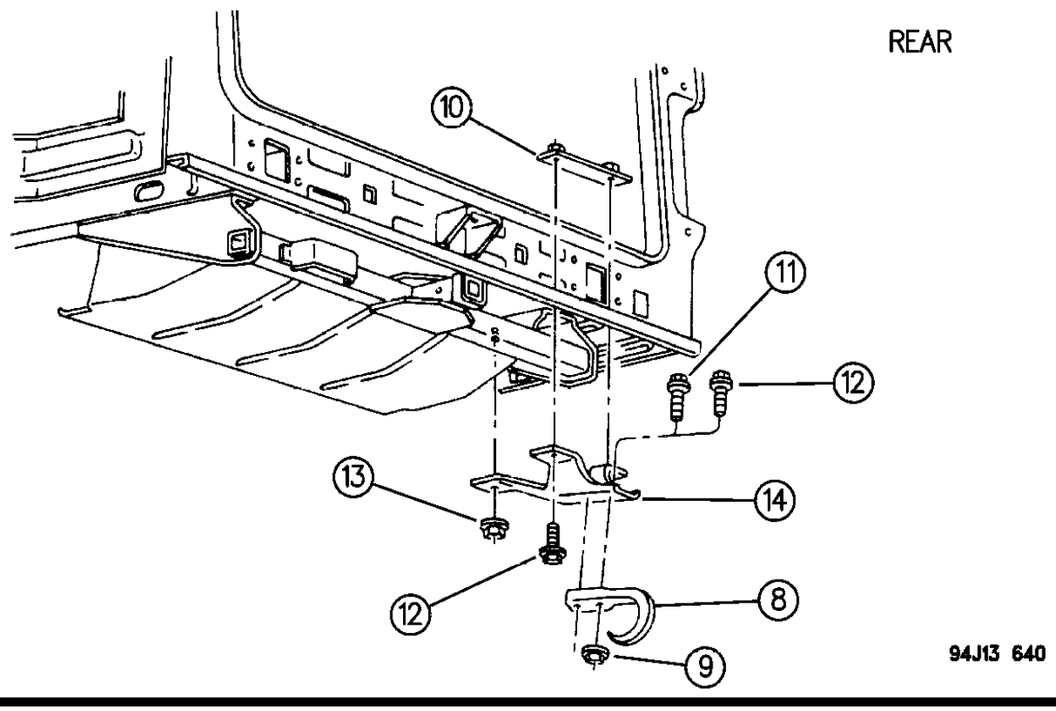

ITEM	PART NUMBER	QTY	BODY	MODEL	DESCRIPTION
1	5205 7762-3	1			PLATE, Reinforcement Tow Hook
2	6101 448	4			NUT
3	5205 7823	2			PLATE, Tow Hook Brkt. to C/mbr.
4	5205 7628-9	1			BRACKET, Tow Hook
5	3420 3021	AR			SCREW
6	6501 067	4			RETAINER
7	6101 554	4			SCREW
8					HOOK, Tow
	5205 7999	2			Front
	5205 7999	1			Rear
9	6100 055	AR			NUT
10	5205 7738	1			PLATE, Reinforcement Rear Tow Hook
11	6100 346	2			BOLT, Tow Hook
12					BOLT
	6101 102	2			Tow Hook
	6101 102	4			Tow Eye
13	6100 056	AR			NUT
14	5200 5584	1			BRACKET, Tow Hook
15					EYE, Toe ***
	5200 5560	1			Front
	5200 1644	1			Rear
16	5205 8196	1			CROSSMEMBER, Radiator Support Lower

MODEL CODES:

72=2 DR Wagon
74=4 DR Wagon
77=Open Body 93" Whlbase
78=Open Body 103" Whlbase - Export
T=2WD
J,N=4WD
U=4WD (RHD)

BODY STYLES:

YJ=Wrangler (4X4) "S"
Weangler (4X4) SE
Wrangler (4X4) Sahara
Wrangler (4X4) Renegade
XJ=Cherokee SE
Cherokee Sport
Cherokee Country
ZJ=Grand Cherokee SE
Grand Cherokee Laredo
Grand Cherolee Limited
ZG=Grand Cherokee European
Y1=Wrangler
X1=Cherokee
Z1=Grand Cherokee
KDX=Vehicles

AR = Use as Required - = Non Illustrated Part P.A.R. = Paint as Required

« RETURN TO GROUP INDEX

HIDDEN WINCH CONTROLS XJ BODY
Figure 13-710

13-710

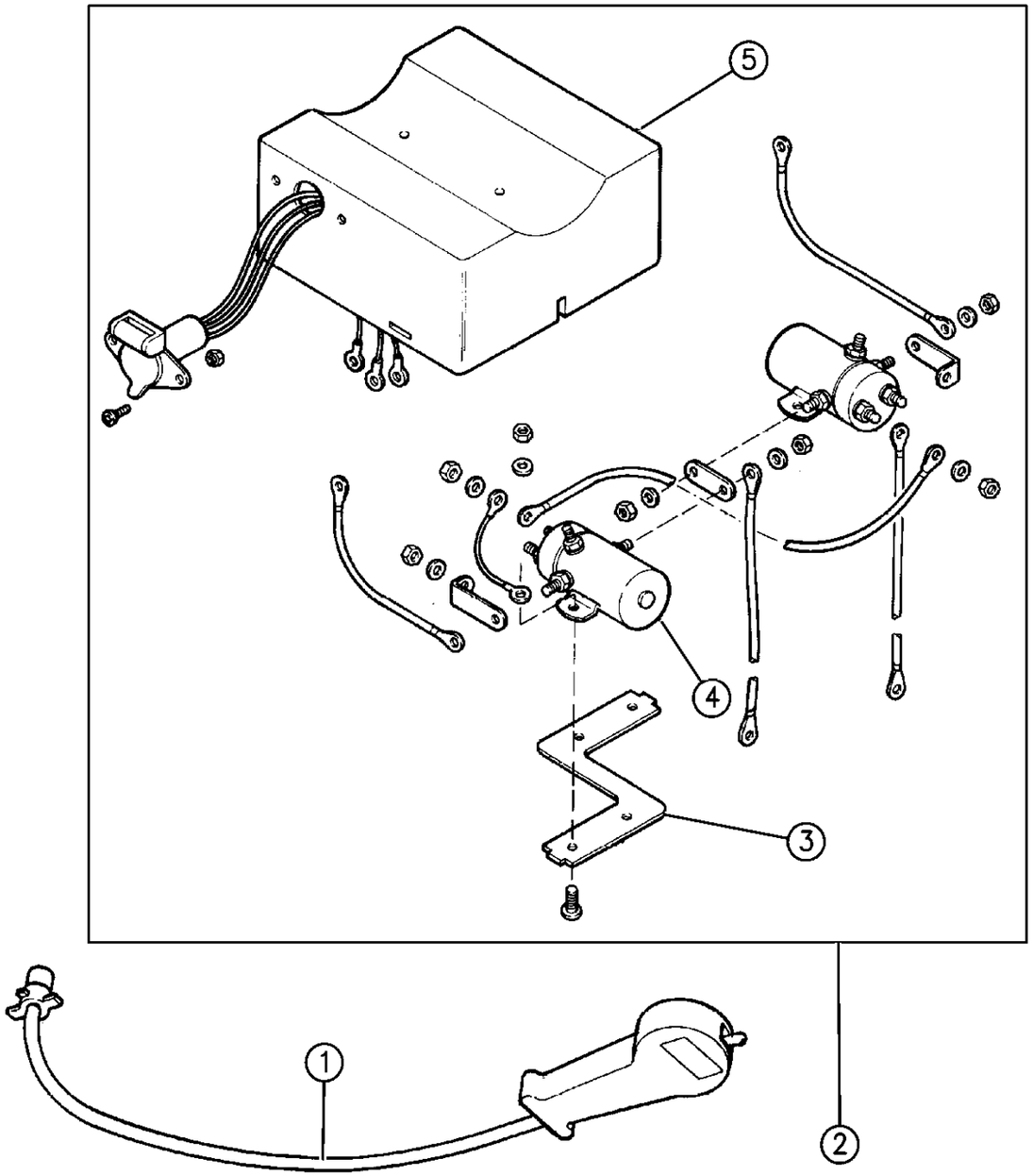

ITEM	PART NUMBER	QTY	BODY	MODEL	DESCRIPTION
1	8350 2231	1			SWITCH, Winch
2	8351 0141	1			SOLENOID, Winch ***
3	8351 0140	1			BRACKET, Solenoid Mtg.
4	8351 0139	2			SOLENOID ***
5	8351 0138	1			COVER, Solenoid

MODEL CODES:

72=2 DR Wagon
74=4 DR Wagon
77=Open Body 93" Whlbase
78=Open Body 103" Whlbase - Export
T=2WD
J,N=4WD
U=4WD (RHD)

BODY STYLES:

YJ=Wrangler (4X4) "S"
Weangler (4X4) SE
Wrangler (4X4) Sahara
Wrangler (4X4) Renegade
XJ=Cherokee SE
Cherokee Sport
Cherokee Country
ZJ=Grand Cherokee SE
Grand Cherokee Laredo
Grand Cherolee Limited
ZG=Grand Cherokee European
Y1=Wrangler
X1=Cherokee
Z1=Grand Cherokee
KDX=Vehicles

AR = Use as Required - = Non Illustrated Part P.A.R. = Paint as Required

HIDDEN WINCH MOUNTING XJ BODY
Figure 13-720

13–720

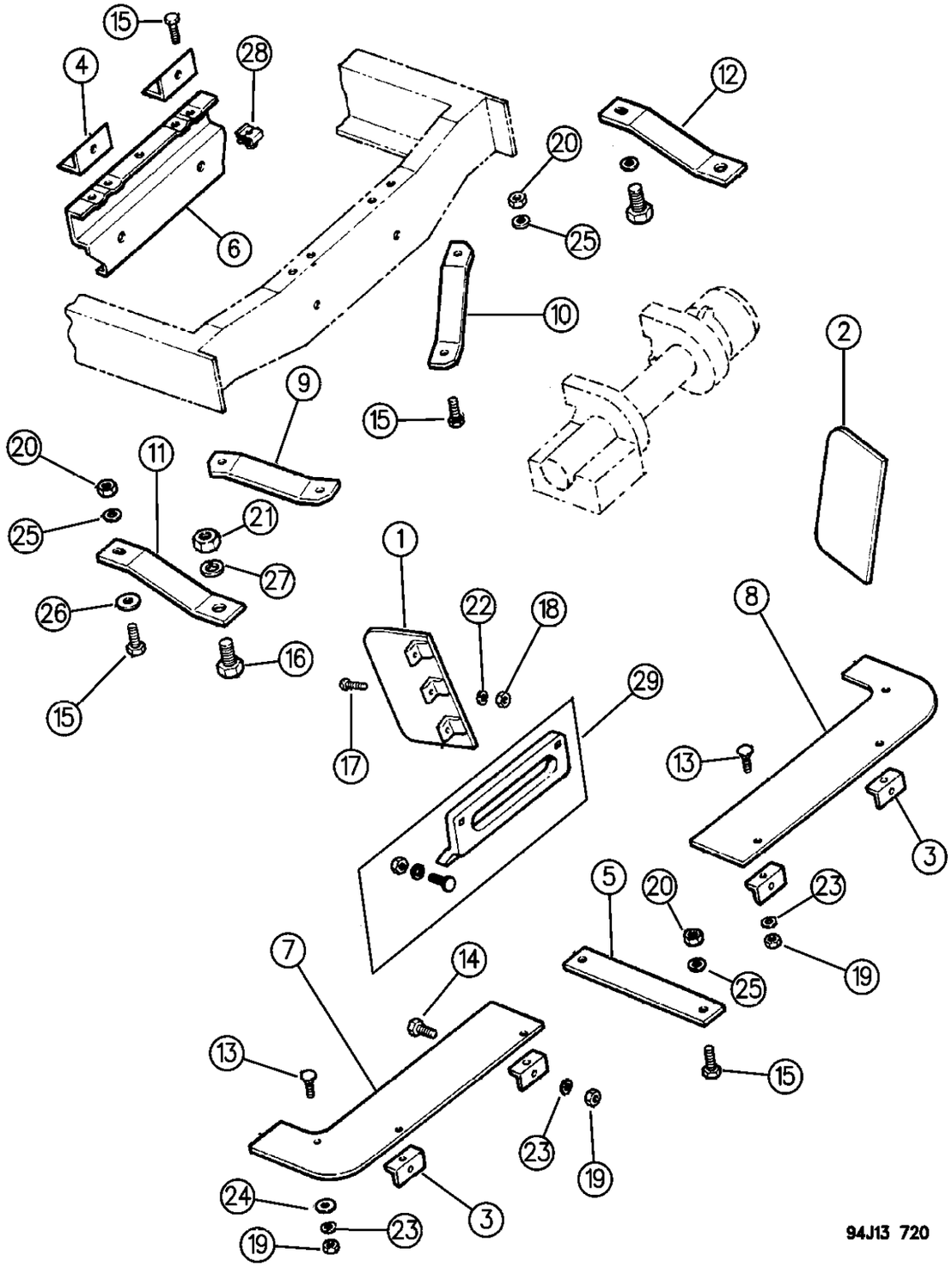

ITEM	PART NUMBER	QTY	BODY	MODEL	DESCRIPTION
1	8350 1124	1			EXTENSION, Rail
2	8350 1125	1			EXTENSION, Rail
3	8350 1126	4			BRACKET, Angle
4	8350 1127	2			BRACKET, Angle
5	8350 1128	1			RETAINER, Rail
6	8350 1129	1			BRACKET, Winch Mounting
7	8350 1130	1			SHIELD, Bumper
8	8350 1131	1			SHIELD, Bumper
9	8350 1132	1			STRAP, Inner
10	8350 1133	1			STRAP, Inner
11	8350 1134	1			STRAP, Outer
12	8350 1135	1			STRAP, Outer
13	8350 1149	6			BOLT
14	J018 0020	4			BOLT
15	J018 0079	10			BOLT
16		2			BOLT (DNS)
17	8350 1150	6			SCREW
18	J012 0361	6			NUT
19	J012 0375	10			NUT
20	J012 0376	6			NUT
21	S012 0378	2			NUT
22	S012 0217	6			WASHER, Lock
23	J012 0380	10			WASHER, Lock
24	J012 0392	2			WASHER, Plain
25	J012 0214	6			WASHER, Lock
26	J012 0393	2			WASHER, Plain
27	S012 0384	2			WASHER, Lock
28	8350 1136	4			NUT, U-Type
29	8350 2247	1			GUIDE, Solid Cable

MODEL CODES:

72=2 DR Wagon
74=4 DR Wagon
77=Open Body 93" Whlbase
78=Open Body 103" Whlbase - Export
T=2WD
J,N=4WD
U=4WD (RHD)

BODY STYLES:

YJ=Wrangler (4X4) "S"
Weangler (4X4) SE
Wrangler (4X4) Sahara
Wrangler (4X4) Renegade

XJ=Cherokee SE
Cherokee Sport
Cherokee Country

ZJ=Grand Cherokee SE
Grand Cherokee Laredo
Grand Cherolee Limited
ZG=Grand Cherokee European

Y1=Wrangler
X1=Cherokee
Z1=Grand Cherokee
KDX=Vehicles

AR = Use as Required - = Non Illustrated Part P.A.R. = Paint as Required

« RETURN TO GROUP INDEX

HIDDEN WINCH MOTOR AND DRUM XJ BODY
Figure 13-730

13–730

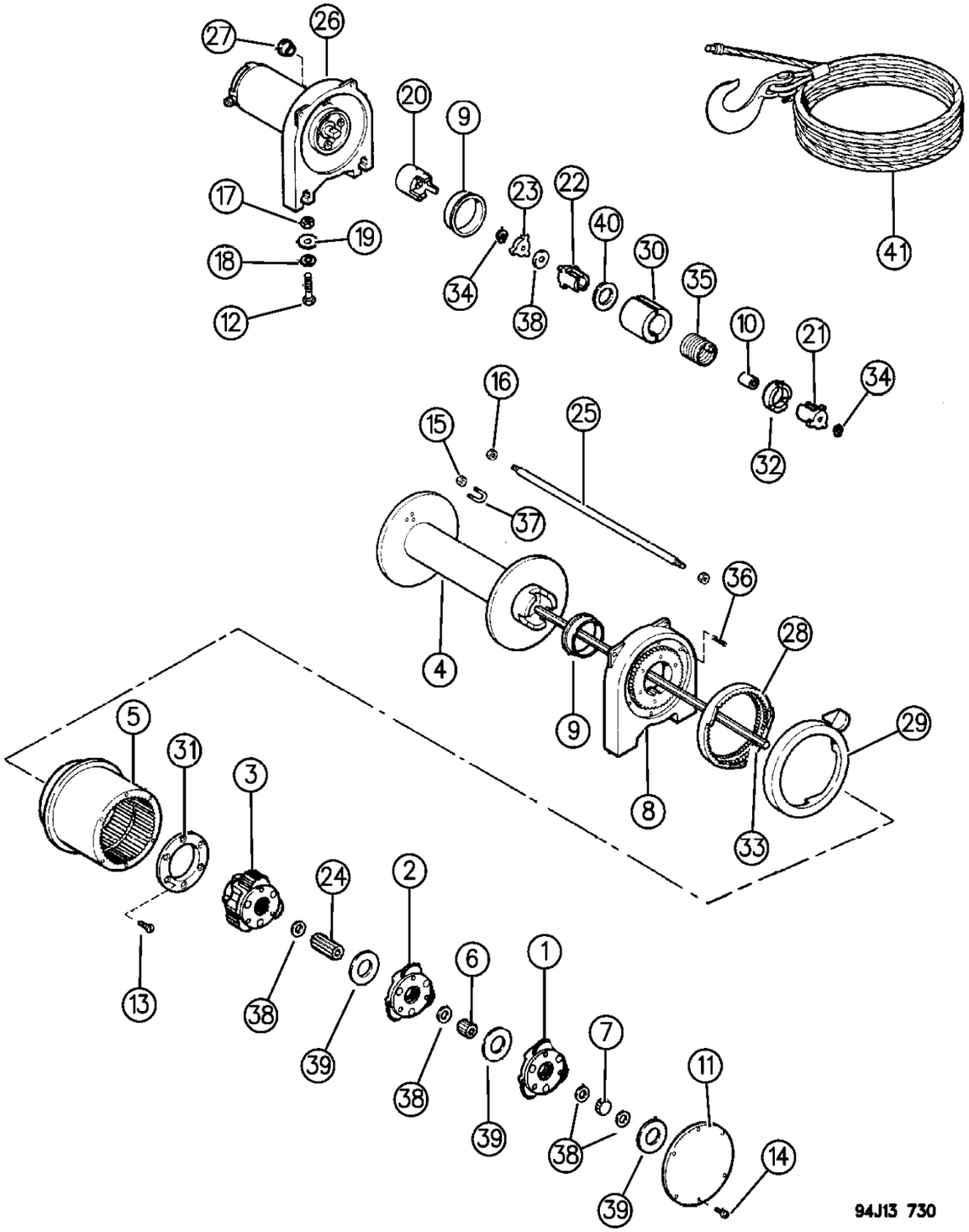

ITEM	PART NUMBER	QTY	BODY	MODEL	DESCRIPTION
1	8350 2228	1			GEAR, Input ***
2	8350 2229	1			GEAR, Intermediate ***
3	8350 2230	1			GEAR, Output ***
4	8350 2232	1			DRUM, Cable
5	8351 0105	1			GEAR, Ring ***
6	8351 0116	1			GEAR, Intermediate
7	8350 2233	1			GEAR, Input
8	8351 0100	1			BEARING, End
9	8351 0104	2			BUSHING, Brake Drum
10	8350 2234	1			BUSHING, Brake Drum
11	8351 0128	1			COVER, Gear Housing
12	S018 0124	4			SCREW
13	8351 0136	6			SCREW
14	8351 0129	6			SCREW
15	J012 0361	2			NUT
16	8351 0135	2			NUT
17	S941 8738	4			NUT
18	J400 3803	4			WASHER
19	8350 2235	4			WASHER
20	8350 2236	1			COUPLING, Brake
21	8350 2237	1			DRUM, Output Brake
22	8350 2238	1			DRUM, Input Brake
23	8350 2239	1			SPROCKET, Input
24	8350 2240	1			GEAR, Output
25	8351 0134	1			BAR, Tie
26	8351 0038	1			MOTOR
27	8351 0103	1			PLUG
28	8351 0107	1			RING, Locking
29	8351 0106	1			RING, Cam
30	8350 2241	2			RING, Half
31	8351 0110	1			RETAINER, Ring Gear
32	8350 2242	1			RETAINER, Brake Spring
33	8350 2091	1			SHAFT, Input
34	8350 2243	2			RING, Snap
35	8350 2244	2			SPRING, Brake
36	8350 2245	2			SPRING
37	8351 0102	1			U-BOLT
38	8351 0127	5			WASHER, Thrust
39	8351 0126	3			WASHER, Thrust
40	8350 2246	1			WASHER, Thrust
41	J813 1517	1			CABLE, Tow

MODEL CODES:

72=2 DR Wagon
74=4 DR Wagon
77=Open Body 93" Whlbase
78=Open Body 103" Whlbase - Export
T=2WD
J,N=4WD
U=4WD (RHD)

BODY STYLES:

YJ=Wrangler (4X4) "S"
Weangler (4X4) SE
Wrangler (4X4) Sahara
Wrangler (4X4) Renegade
XJ=Cherokee SE
Cherokee Sport
Cherokee Country
ZJ=Grand Cherokee SE
Grand Cherokee Laredo
Grand Cherolee Limited
ZG=Grand Cherokee European
Y1=Wrangler
X1=Cherokee
Z1=Grand Cherokee
KDX=Vehicles

AR = Use as Required - = Non Illustrated Part P.A.R. = Paint as Required

« RETURN TO GROUP INDEX

SAGIPARTS

GROUP-14
FUEL

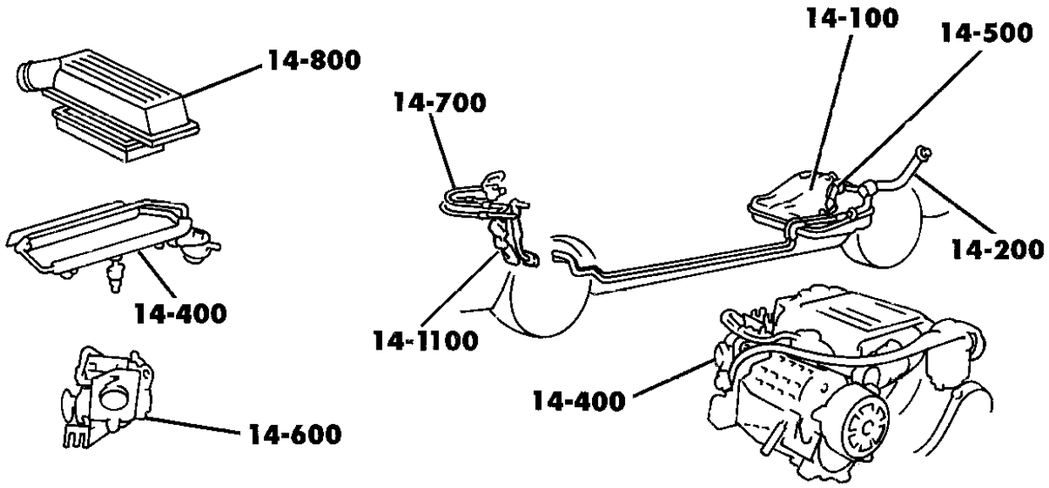

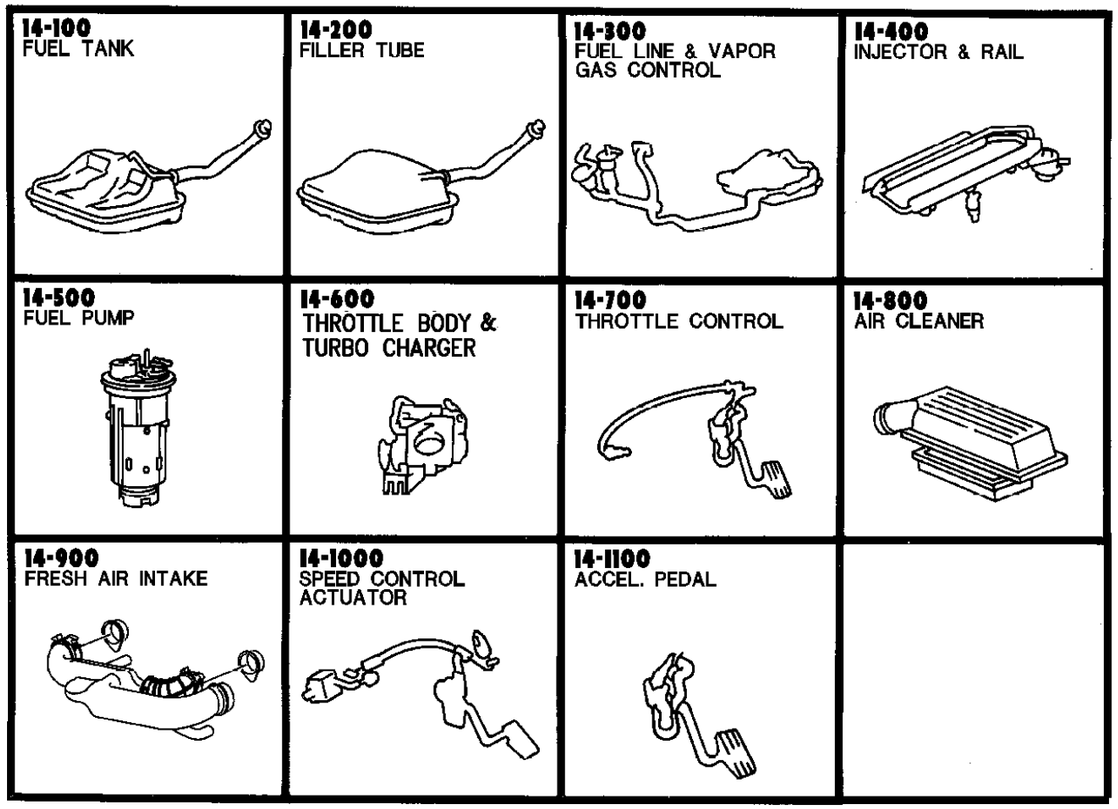

GROUP 14 - FUEL

ILLUSTRATION TITLE — **GROUP-FIG. NO.**

FUEL TANK
FUEL TANK YJ BODY . . . . . Fig. 14-110
FUEL TANK XJ BODY . . . . . Fig. 14-120
FUEL TANK ZJ BODY . . . . . Fig. 14-130

FUEL TANK FILLER TUBE
FUEL TANK FILLER TUBE YJ BODY . . . . . Fig. 14-210
FUEL TANK FILLER TUBE XJ, ZJ BODY . . . . . Fig. 14-220

FUEL LINES
FUEL LINES, FRONT YJ, XJ, ZJ BODY . . . . . Fig. 14-310
FUEL LINES, FRONT 2.5L DIESEL ENGINE XJ BODY . . . . . Fig. 14-315
FUEL LINES, FRONT 2.5L DIESEL ENGINE ZG BODY . . . . . Fig. 14-317
FUEL LINES, REAR YJ BODY . . . . . Fig. 14-320
FUEL LINES, REAR XJ BODY . . . . . Fig. 14-330
FUEL LINES, REAR 2.5L DIESEL ENGINE XJ BODY . . . . . Fig. 14-335
FUEL LINES, REAR ZJ BODY . . . . . Fig. 14-340
FUEL LINES, REAR 2.5L DIESEL ENGINE ZG BODY . . . . . Fig. 14-345

FUEL INJECTION SYSTEM
FUEL INJECTION SYSTEM 2.5L, 4.0L, 5.2L ENGINE YJ, XJ, ZJ BODY . . . . . Fig. 14-410
FUEL INJECTION SYSTEM 2.1L DIESEL ENGINE XJ BODY . . . . . Fig. 14-420
FUEL INJECTION SYSTEM 2.5L DIESEL ENGINE XJ BODY . . . . . Fig. 14-425
FUEL INJECTION SYSTEM 2.5L DIESEL ENGINE ZG BODY . . . . . Fig. 14-430
FUEL INJECTION PUMP 2.1L DIESEL ENGINE XJ BODY . . . . . Fig. 14-440
FUEL INJECTION PUMP 2.1L DIESEL ENGINE XJ BODY . . . . . Fig. 14-450
FUEL INJECTION PUMP 2.5L DIESEL ENGINE XJ BODY . . . . . Fig. 14-460
FUEL INJECTION PUMP 2.5L DIESEL ENGINE ZG BODY . . . . . Fig. 14-465

FUEL PUMP AND SENDING UNIT
FUEL PUMP 2.5L CARBURETED ENGINE X1 BODY . . . . . Fig. 14-510
FUEL PUMP AND SENDING UNIT YJ, XJ, ZJ BODY . . . . . Fig. 14-520

THROTTLE BODY AND TURBOCHARGER
THROTTLE BODY YJ, XJ, ZJ BODY . . . . . Fig. 14-610
TURBOCHARGER 2.1L DIESEL ENGINE XJ BODY . . . . . Fig. 14-620
CARBURETOR 2.5L ENGINE X1 BODY . . . . . Fig. 14-625
TURBOCHARGER 2.5L DIESEL ENGINE XJ BODY . . . . . Fig. 14-660
TURBOCHARGER 2.5L DIESEL ENGINE ZG BODY . . . . . Fig. 14-670

THROTTLE CONTROLS
THROTTLE CONTROLS YJ BODY . . . . . Fig. 14-710
THROTTLE CONTROLS XJ, ZJ, ZG BODY . . . . . Fig. 14-720

GROUP 14 - FUEL

ILLUSTRATION TITLE	GROUP-FIG. NO.
THROTTLE CONTROLS (Continued)	
THROTTLE CONTROLS XJ, ZJ, ZG BODY	Fig. 14-720
THROTTLE CONTROLS 2.5L DIESEL ENGINE XJ BODY	Fig. 14-725
THROTTLE CONTROLS 2.5L DIESEL ENGINE ZG BODY	Fig. 14-730
AIR CLEANER	
AIR CLEANER YJ BODY	Fig. 14-810
AIR CLEANER 2.5L, 4.0L ENGINE XJ BODY	Fig. 14-820
AIR CLEANER 2.1L DIESEL ENGINE XJ BODY	Fig. 14-830
AIR CLEANER 2.5L DIESEL ENGINE XJ BODY	Fig. 14-835
AIR CLEANER 2.5L CARBURETED ENGINE X1 BODY	Fig. 14-840
AIR CLEANER ZJ BODY	Fig. 14-850
AIR CLEANER 2.5L DIESEL ENGINE ZG BODY	Fig. 14-865
AIR INTAKE SYSTEM	
AIR INTAKE SYSTEM YJ, XJ BODY	Fig. 14-903
AIR INTAKE AND CHARGE AIR COOLER SYSTEM 2.1L DIESEL ENGINE XJ BODY	Fig. 14-905
AIR INTAKE AND CHARGE AIR COOLER SYSTEM 2.5L DIESEL ENGINE XJ BODY	Fig. 14-910
AIR INTAKE AND CHARGE AIR COOLER SYSTEM 2.5L DIESEL ENGINE ZG BODY	Fig. 14-920
SPEED CONTROL	
SPEED CONTROL 2.5L, 4.0L ENGINE XJ BODY	Fig. 14-1010
SPEED CONTROL 2.1L DIESEL ENGINE XJ BODY	Fig. 14-1020
SPEED CONTROL 2.5L DIESEL ENGINE XJ BODY	Fig. 14-1025
SPEED CONTROL ZJ BODY	Fig. 14-1030
SPEED CONTROL 2.5L DIESEL ENGINE ZG BODY	Fig. 14-1035
ACCELERATOR PEDAL	
ACCELERATOR PEDAL YJ, XJ, ZJ BODY	Fig. 14-1110

FUEL TANK YJ BODY
Figure 14-110

14–110

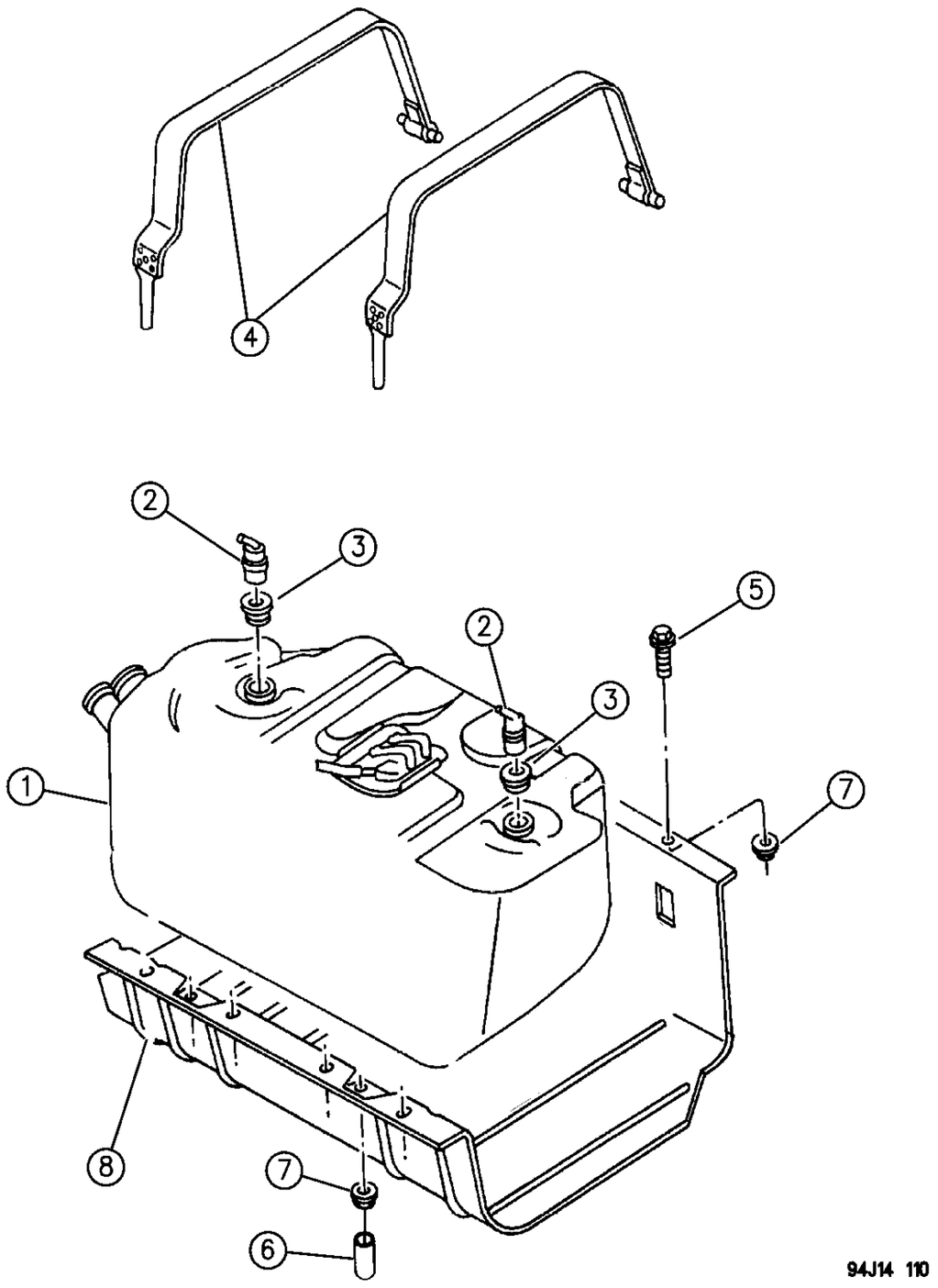

ITEM	PART NUMBER	QTY	BODY	MODEL	DESCRIPTION
1					TANK, Fuel
	5201 8286	1			15 Gal.
	5201 8287	1			20 Gal.
	5202 0522	1			20 Gal., Egypt
	5204 0076	1			PAD, Tank Shield
2	J536 0058	1			VALVE, Fuel Vapor
3	5201 8823	1			SEAL, Vapor Valve
4	J535 6651	2			STRAP, Fuel Tank to Skid Plate
5	J018 0078	3			BOLT
6	5201 8098	2			CAP
7	J400 3587	2			NUT
8	5201 8764	1			PLATE, Fuel Tank Skid

MODEL CODES:

72=2 DR Wagon
74=4 DR Wagon
77=Open Body 93" Whlbase
78=Open Body 103" Whlbase - Export
T=2WD
J,N=4WD
U=4WD (RHD)

BODY STYLES:

YJ=Wrangler (4X4) "S"
Weangler (4X4) SE
Wrangler (4X4) Sahara
Wrangler (4X4) Renegade
XJ=Cherokee SE
Cherokee Sport
Cherokee Country
ZJ=Grand Cherokee SE
Grand Cherokee Laredo
Grand Cherolee Limited
ZG=Grand Cherokee European
Y1=Wrangler
X1=Cherokee
Z1=Grand Cherokee
KDX=Vehicles

AR = Use as Required - = Non Illustrated Part P.A.R. = Paint as Required

« RETURN TO GROUP INDEX

FUEL TANK XJ BODY
Figure 14-120

14-120A

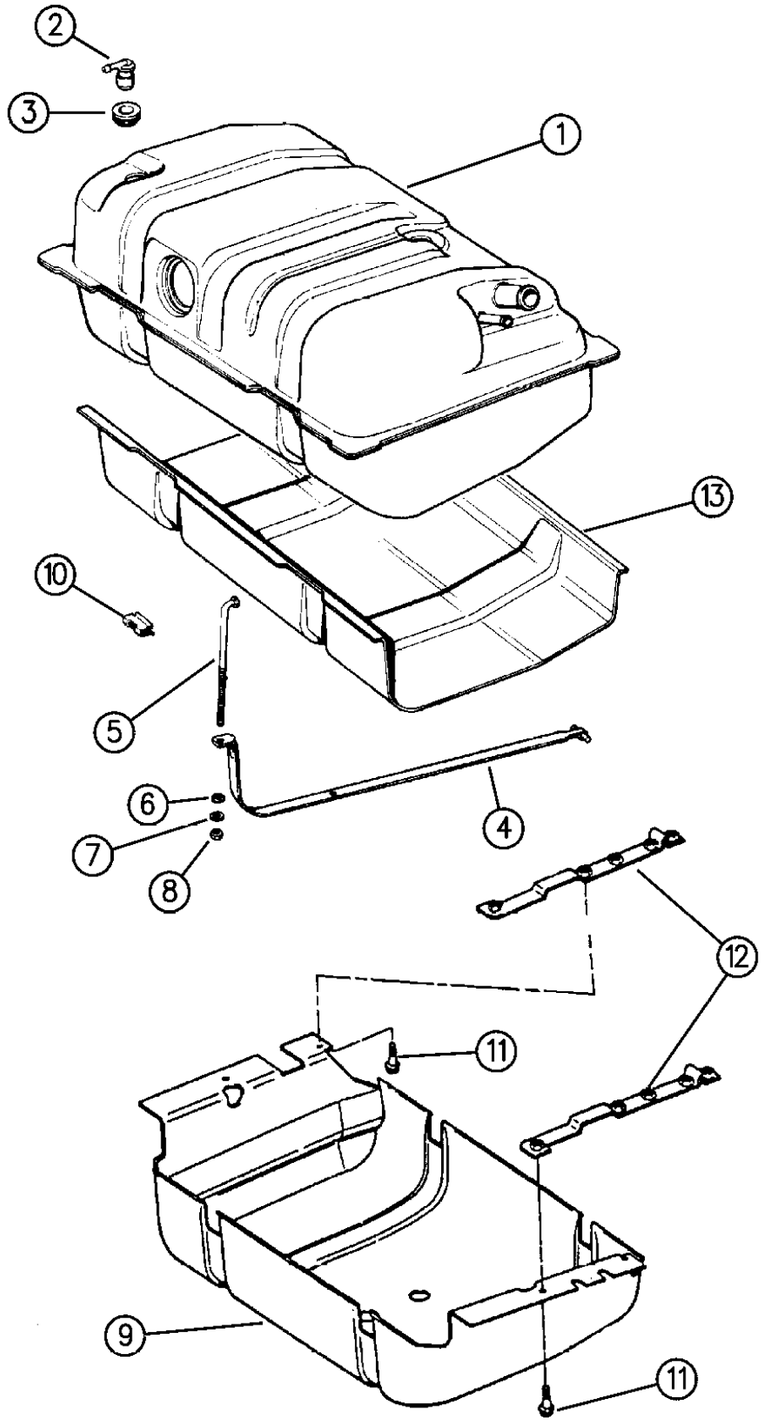

ITEM	PART NUMBER	QTY	BODY	MODEL	DESCRIPTION
1					TANK, Fuel
	5210 0221	1			2.5L/4.0L Eng.
	5201 8860	1			2.1L/2.5L Diesel Eng.
2	J536 0058	2			VALVE, Fuel Vapor
3	5201 8823	2			SEAL, Vapor Valve
4	5200 0128	2			STRAP, Fuel Tank Mtg.
5	J324 0023	2			BOLT, Fuel Tank Strap
6	J400 1104	2			WASHER
7	J064 9704	2			WASHER
8	0118 615	2			NUT
9	5200 1512	1			PLATE, Fuel Tank Skid
10	3420 1934	6			CLIP
11	3420 1964	4			BOLT
12	5200 1174-5	1			REINFORCEMENT, Trailer Hitch Mtg.
13	5200 0415	1			SHIELD, Fuel Tank

MODEL CODES:

72=2 DR Wagon
74=4 DR Wagon
77=Open Body 93" Whlbase
78=Open Body 103" Whlbase - Export
T=2WD
J,N=4WD
U=4WD (RHD)

BODY STYLES:

YJ=Wrangler (4X4) "S"
Weangler (4X4) SE
Wrangler (4X4) Sahara
Wrangler (4X4) Renegade

XJ=Cherokee SE
Cherokee Sport
Cherokee Country

ZJ=Grand Cherokee SE
Grand Cherokee Laredo
Grand Cherolee Limited
ZG=Grand Cherokee European

Y1=Wrangler
X1=Cherokee
Z1=Grand Cherokee
KDX=Vehicles

AR = Use as Required - = Non Illustrated Part P.A.R. = Paint as Required

« RETURN TO GROUP INDEX

FUEL TANK ZJ BODY
Figure 14-130

14-130A

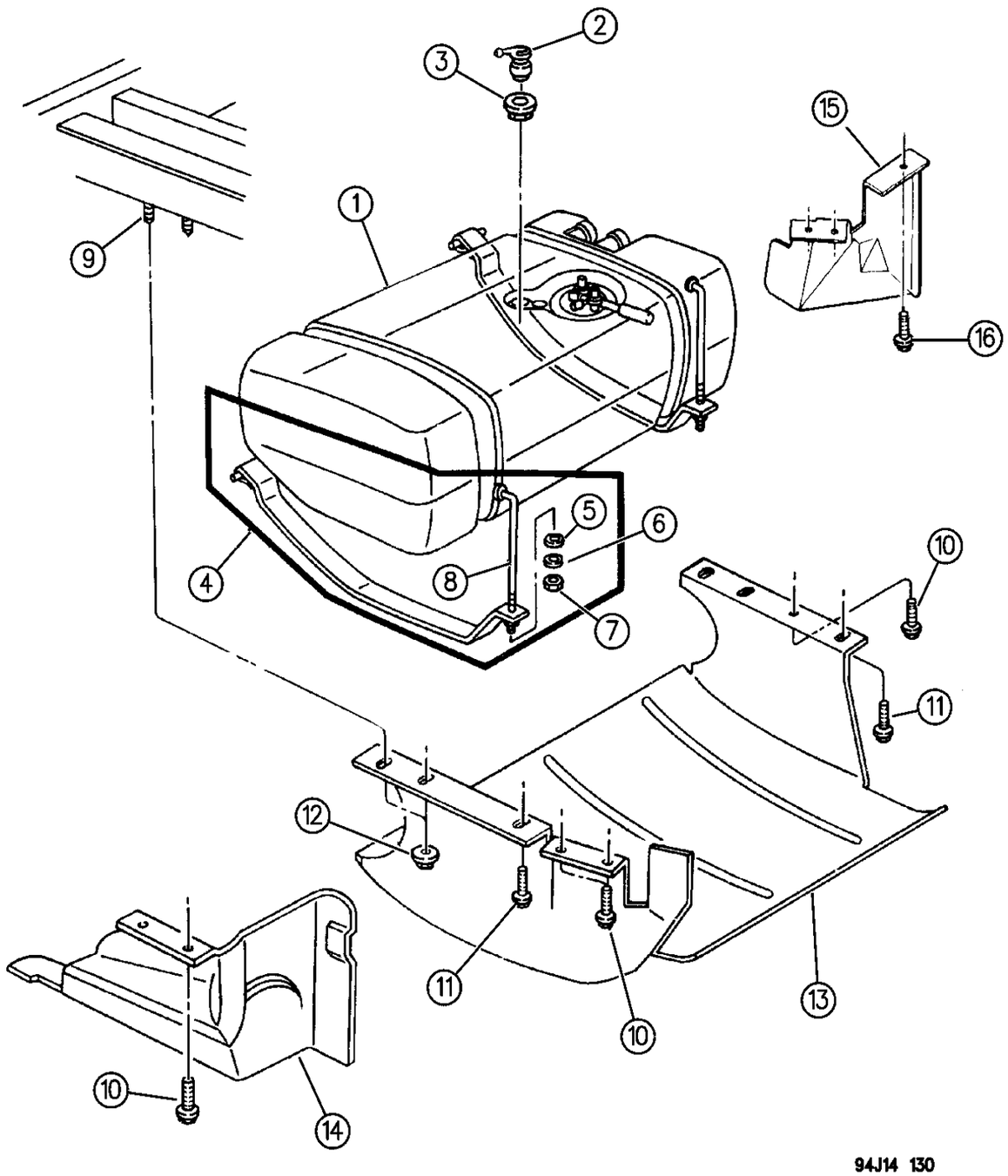

ITEM	PART NUMBER	QTY	BODY	MODEL	DESCRIPTION
1					TANK, Fuel
	5212 7523	1			1994
					1995
	5212 7523	1			Federal
	5201 8279	1			Calif.
					1996
	5210 0058	1			Federal
	5201 8825	1			Calif.
2	J536 0058	1			VALVE, Fuel Vapor
3	5201 8823	1			SEAL, Vapor Valve
4					STRAP, Fuel Tank Mtg.
	5212 7580	1			1994-95, Federal and H/A
	5210 0133	1			1995, Calif., Federal
	5212 7580	1			1995, Calif., Export
	5212 7580	2			1996
	5210 0128	2		ZG	1996, RHD
5	J064 9704	2			WASHER, Lock
6	J400 1104	2			WASHER
7	6034 955	2			NUT
8	5210 0130	2			BOLT, Fuel Tank Mtg.
9	6502 507	4			STUD
10	3420 1964	AR			BOLT, Skid Plate Mtg.
11	6101 102	2			BOLT, Skid Plate Mtg.
12	6100 056	4			NUT
13	5201 8436	1			PLATE, Skid
14	5529 6096	1			SHIELD, Heat, Fuel Tank, Center
15	5305 5010	1			SHIELD, Heat, Fuel Tank, Side
16	6101 777	3			BOLT

MODEL CODES:

72=2 DR Wagon
74=4 DR Wagon
77=Open Body 93" Whlbase
78=Open Body 103" Whlbase - Export
T=2WD
J,N=4WD
U=4WD (RHD)

BODY STYLES:

YJ=Wrangler (4X4) "S"
Weangler (4X4) SE
Wrangler (4X4) Sahara
Wrangler (4X4) Renegade
XJ=Cherokee SE
Cherokee Sport
Cherokee Country
ZJ=Grand Cherokee SE
Grand Cherokee Laredo
Grand Cherolee Limited
ZG=Grand Cherokee European
Y1=Wrangler
X1=Cherokee
Z1=Grand Cherokee
KDX=Vehicles

AR = Use as Required - = Non Illustrated Part P.A.R. = Paint as Required

« RETURN TO GROUP INDEX

FUEL TANK FILLER TUBE YJ BODY
Figure 14-210

14-210C

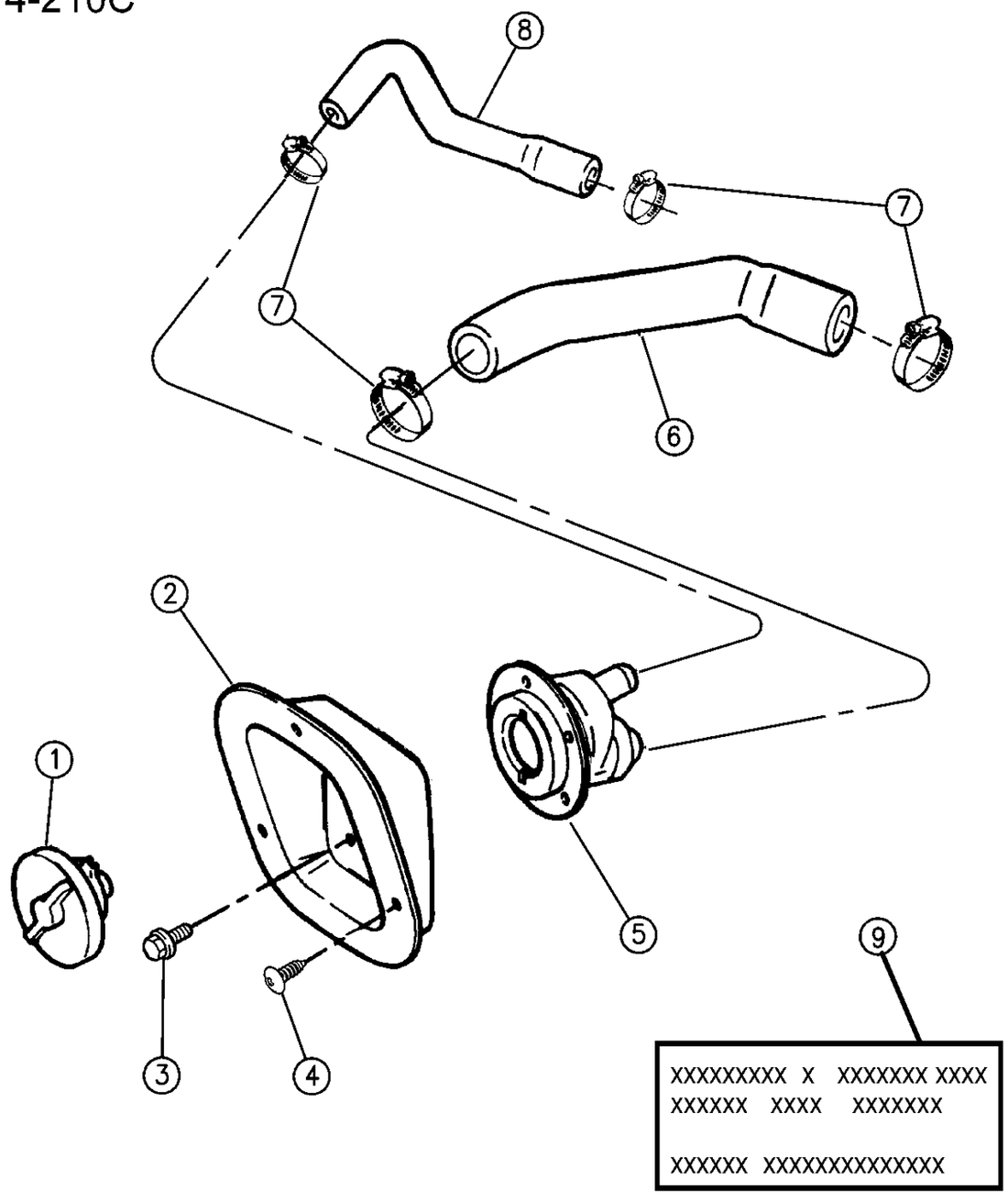

94J14 210

ITEM	PART NUMBER	QTY	BODY	MODEL	DESCRIPTION
1	5200 6629	1			CAP, Filler
2	J546 3803	1			PROTECTOR, Gas Cap
3		6			SCREW, (Not Serviced)
4	J400 5817	3			SCREW
5					NOZZLE, Fuel Filler
	5200 7386	1			Unleaded Fuel
					Leaded Fuel
	5200 7387	1			KDX/Egypt/Venezuela, w/93" W.B.
	5201 8066	1			KDX/Egypt/Venezuela, w/103" W.B.
6					HOSE, Fuel Filler
	5204 0079	1			w/93" W.B.
	5200 3509	1			KDX/Egypt/Venezuela, w/103" W.B., w/20 Gal. Tank
-					HOSE
-	5201 8346	1			Fuel Tube to Filter, Egypt/Venezuela
-	5201 8348	1			Fuel Tank to Filter, Egypt/Venezuela
-	5201 8360	1			Fuel Tank to Return Tube, Egypt/Venezuela
7	J320 3077	1			CLAMP
8					HOSE, Fuel Tank Vent
	5204 0081	1			w/93" W.B.
	5200 3511	1			KDX/Egypt/Venezuela, w/103" W.B., w/20 Gal. Tank
9		1			LABEL, Fuel
	J369 6393	1			1994-95, "Unleaded Fuel Only"
		1			1996, Stamped into License Plate Bracket

MODEL CODES:

72=2 DR Wagon
74=4 DR Wagon
77=Open Body 93" Whlbase
78=Open Body 103" Whlbase - Export
T=2WD
J,N=4WD
U=4WD (RHD)

BODY STYLES:

YJ=Wrangler (4X4) "S"
Weangler (4X4) SE
Wrangler (4X4) Sahara
Wrangler (4X4) Renegade

XJ=Cherokee SE
Cherokee Sport
Cherokee Country

ZJ=Grand Cherokee SE
Grand Cherokee Laredo
Grand Cherolee Limited
ZG=Grand Cherokee European

Y1=Wrangler
X1=Cherokee
Z1=Grand Cherokee
KDX=Vehicles

AR = Use as Required - = Non Illustrated Part P.A.R. = Paint as Required

« RETURN TO GROUP INDEX

FUEL TANK FILLER TUBE XJ, ZJ BODY
Figure 14-220

14-220B

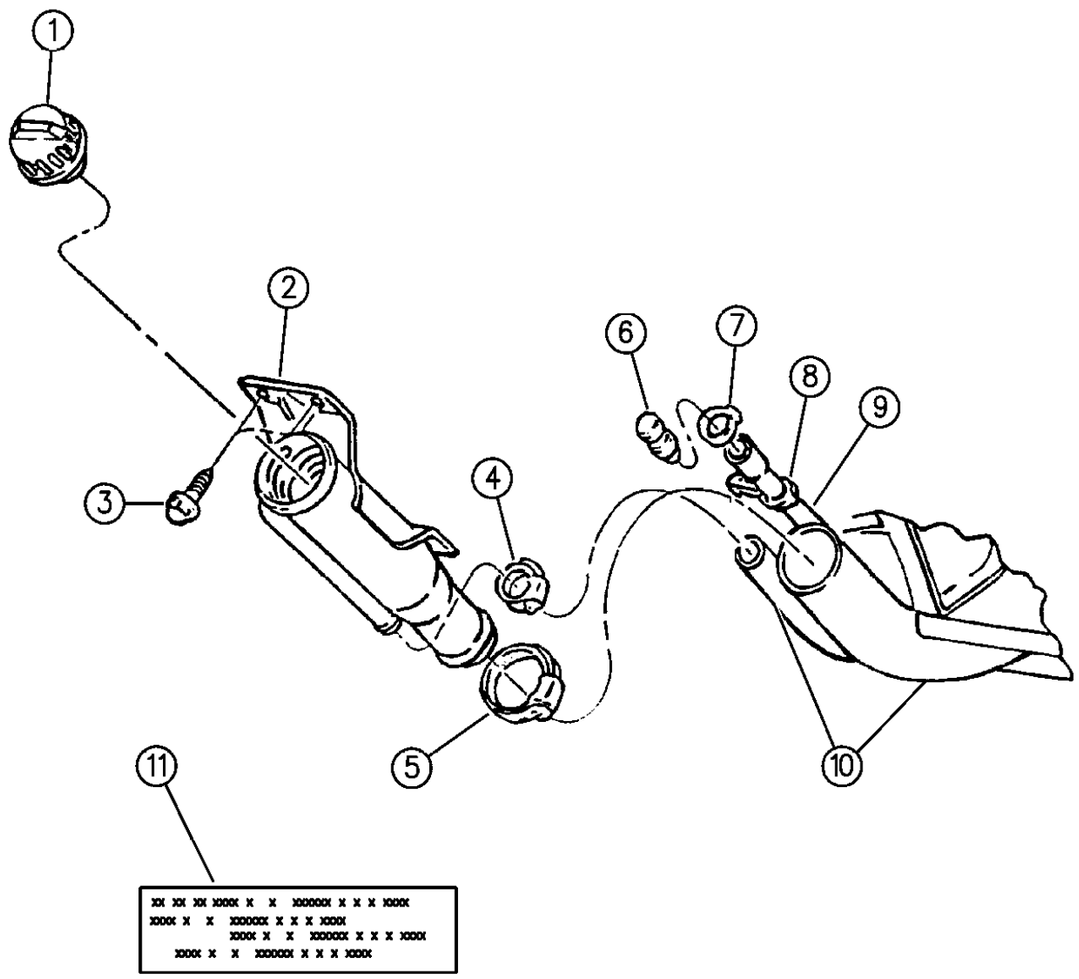

94J14 220

ITEM	PART NUMBER	QTY	BODY	MODEL	DESCRIPTION
1	5200 6629	1			CAP, Filler
2					TUBE, Fuel Tank Filler
					w/o Leaded Fuel
	5212 8039	1		XJ	1994-95
	5210 0173	1		XJ	1996
					w/Leaded Fuel and Diesel
	5212 9026	1		XJ	1994-95
	5210 0174	1		XJ	1996
					w/o Leaded Fuel
	5202 0128	1		ZJ	1994
	5212 7528	1		ZJ	1995-96
					w/Leaded Fuel
	5212 7529	1		ZJ	
3					SCREW
	J400 1701	AR		XJ	
	J941 7855	4		ZJ	
4	J320 3077	1			CLAMP
5	6502 090	1		ZJ	CLAMP
6	J535 2955	1		XJ	CAP, Fuel Tank Vent
7	3300 0785	1		XJ	CLAMP
8	3420 1633	1		XJ	CLIP
9	5300 1740	1		XJ,X1	HOSE, Vent
10					HOSE
	5200 0623	1		XJ	Fuel Tank Filler and Vent
					Fuel Tank Filler
	5201 8499	1		ZJ	1994-95
	5201 8801	1		ZJ	1996
					Fuel Tank Vent
	5201 8296	1		ZJ	1994-95
	5201 8799	1		ZJ	1996
11	J369 6393	1			LABEL, Fuel, "Unleaded Fuel Only"

MODEL CODES:

72=2 DR Wagon
74=4 DR Wagon
77=Open Body 93" Whlbase
78=Open Body 103" Whlbase - Export
T=2WD
J,N=4WD
U=4WD (RHD)

BODY STYLES:

YJ=Wrangler (4X4) "S"
Weangler (4X4) SE
Wrangler (4X4) Sahara
Wrangler (4X4) Renegade
XJ=Cherokee SE
Cherokee Sport
Cherokee Country
ZJ=Grand Cherokee SE
Grand Cherokee Laredo
Grand Cherolee Limited
ZG=Grand Cherokee European
Y1=Wrangler
X1=Cherokee
Z1=Grand Cherokee
KDX=Vehicles

AR = Use as Required - = Non Illustrated Part P.A.R. = Paint as Required

« RETURN TO GROUP INDEX

FUEL LINES, FRONT YJ, XJ, ZJ BODY
Figure 14-310

14-310D

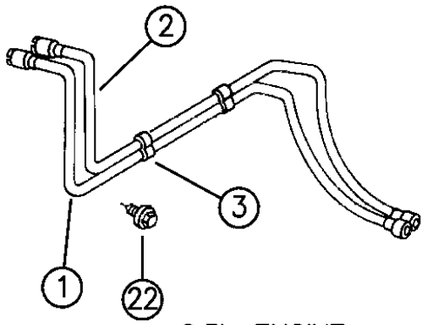

2.5L ENGINE

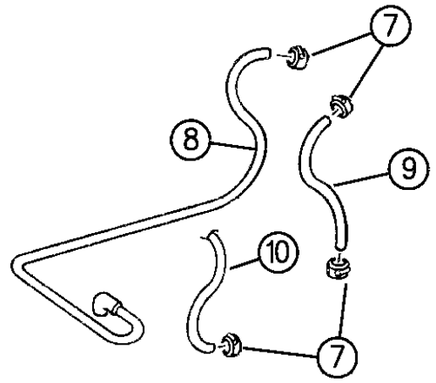

2.1L DIESEL ENGINE

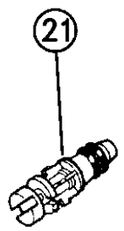

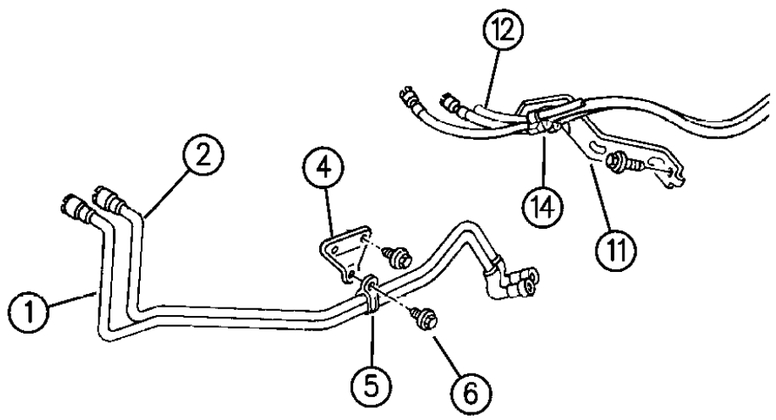

4.0L ENGINE

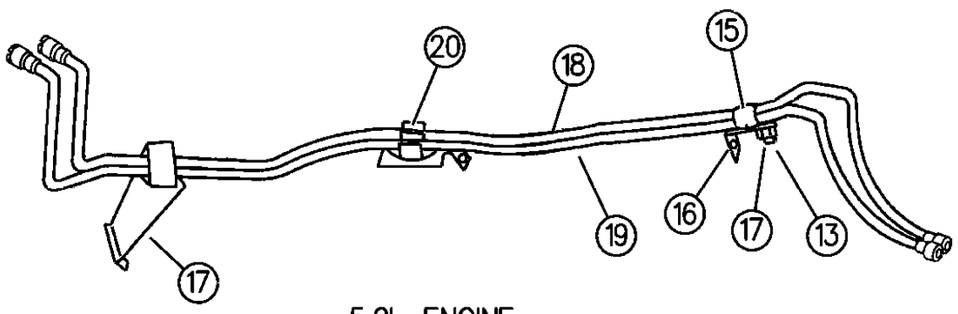

5.2L ENGINE

94J14 310

ITEM	PART NUMBER	QTY	BODY	MODEL	DESCRIPTION
1					TUBE, Fuel Supply, w/Hose
					2.5L Eng.
	5201 8544	1		YJ	
	5200 4876	1		XJ	1994-95
	5212 7900	1		XJ	1996
					4.0L Eng.
	5200 4493	1		YJ	
	5201 8416	1		XJ	1994-95
	5285 0360	1		XJ	1996
	5200 7267	1		ZJ	1994, Up to 6-1-94
	5212 7640	1		ZJ	1994, After 6-1-94
	5212 7633	1		ZJ	1995
	5212 7633	1		ZJ	1996, 4.0L
	5210 0004	1		ZJ	1996, 5.2L
-	5212 7788	2			CLIP, Secondary Latch
2					TUBE, Fuel Return, w/Hose
					2.5L Eng.
	5201 8542	1		YJ	
	5200 4878	1		XJ	
					4.0L Eng.
	5200 4495	1		YJ	
	5201 8417	1		XJ	
	5200 7270	1		ZJ	1994, Up to 6-1-94
	5212 7641	1		ZJ	1994-96, After 6-1-94
		1		ZJ	5.2L Eng., (Serviced in Fuel Rail Assembly)
3	5201 7892	2			CLIP, Fuel Tube, 2.5L Eng.
4					BRACKET, Fuel Line Supply
	5200 4497	1		YJ,XJ	
	5200 7273	1		ZJ	
5	3420 2997	1			CLIP, Fuel Tube Bracket
6	3420 1381	AR			BOLT
7	3300 0786	AR			CLAMP
8		1			HOSE, Filter to Injection Pump, (Not Serviced)
9	4443 176	AR			HOSE, Fuel Supply to Filter
10	4443 175	AR			HOSE, Filter to Return Tube
11	5200 7187	1		XJ,ZJ	BRACKET, Front Fuel
12					TUBE, Fuel Vapor Front
	5201 8617	1			1994-95
	5201 9391	1			1996
13	6100 047	1			NUT, Clip Mounting
14	5200 7533	AR			CLIP, 3 Way
15	3420 2997	AR			CLIP, Fuel Line

MODEL CODES:

72=2 DR Wagon
74=4 DR Wagon
77=Open Body 93" Whlbase
78=Open Body 103" Whlbase - Export
T=2WD
J,N=4WD
U=4WD (RHD)

BODY STYLES:

YJ=Wrangler (4X4) "S"
Weangler (4X4) SE
Wrangler (4X4) Sahara
Wrangler (4X4) Renegade
XJ=Cherokee SE
Cherokee Sport
Cherokee Country
ZJ=Grand Cherokee SE
Grand Cherokee Laredo
Grand Cherolee Limited
ZG=Grand Cherokee European
Y1=Wrangler
X1=Cherokee
Z1=Grand Cherokee
KDX=Vehicles

AR = Use as Required - = Non Illustrated Part P.A.R. = Paint as Required

FUEL LINES, FRONT YJ, XJ, ZJ BODY
Figure 14-310

14-310D

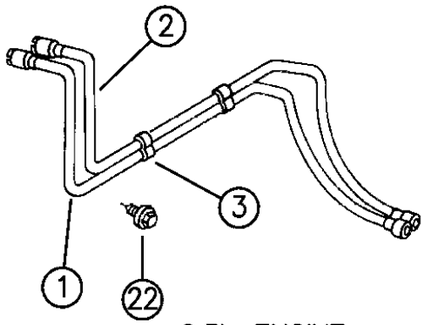

2.5L ENGINE

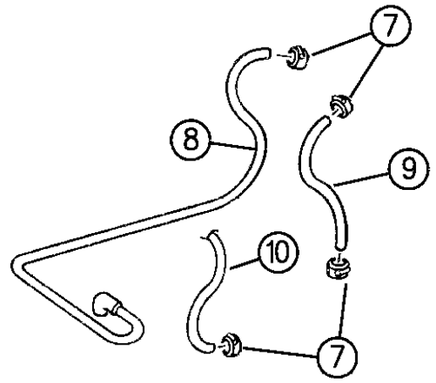

2.1L DIESEL ENGINE

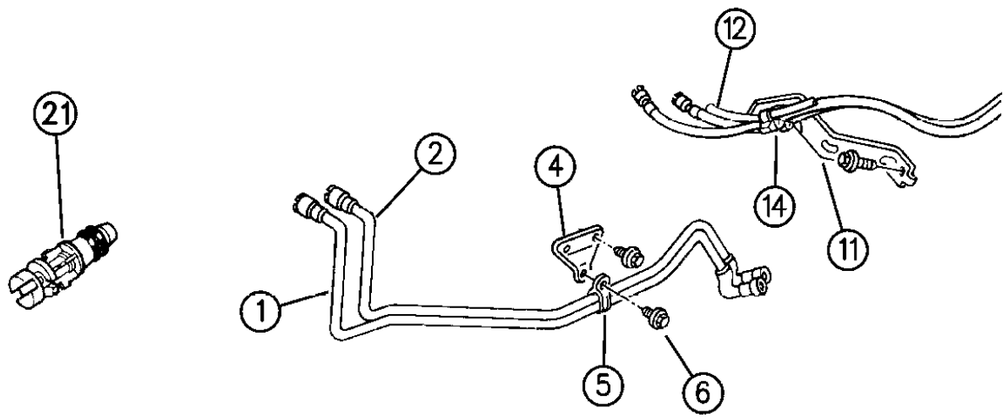

4.0L ENGINE

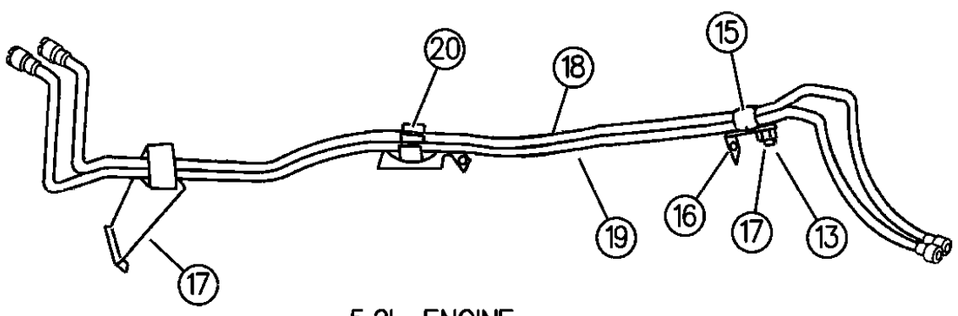

5.2L ENGINE

94J14 310

ITEM	PART NUMBER	QTY	BODY	MODEL	DESCRIPTION
16	5201 8479	1		ZJ	BRACKET, Rear
17	6501 714	1			BOLT, Clip Mounting
18	5201 8811	1		ZJ	TUBE, Fuel Return, Intermediate
19					TUBE, Fuel Supply, Front
	5201 8810	1		ZJ	1994
	5212 8115	1		ZJ	1995
	5210 0004	1		ZJ	1996
20	5201 8478	1		ZJ	BRACKET, Middle
21					O-RING REPAIR PACKAGE, Supply/Return, (Plastic Connectors Only) ***
	8350 4447	1			3/8" Fuel Line
	8350 2745	1			5/16" Fuel Line
22	6101 786	2			SCREW, Support Bracket to Intake Manifold, (M6x1.00x15.00)

MODEL CODES:

72=2 DR Wagon
74=4 DR Wagon
77=Open Body 93" Whlbase
78=Open Body 103" Whlbase - Export
T=2WD
J,N=4WD
U=4WD (RHD)

BODY STYLES:

YJ=Wrangler (4X4) "S"
Weangler (4X4) SE
Wrangler (4X4) Sahara
Wrangler (4X4) Renegade
XJ=Cherokee SE
Cherokee Sport
Cherokee Country
ZJ=Grand Cherokee SE
Grand Cherokee Laredo
Grand Cherolee Limited
ZG=Grand Cherokee European
Y1=Wrangler
X1=Cherokee
Z1=Grand Cherokee
KDX=Vehicles

AR = Use as Required - = Non Illustrated Part P.A.R. = Paint as Required

FUEL LINES, FRONT 2.5L DIESEL ENGINE XJ BODY
Figure 14-315

14-315A

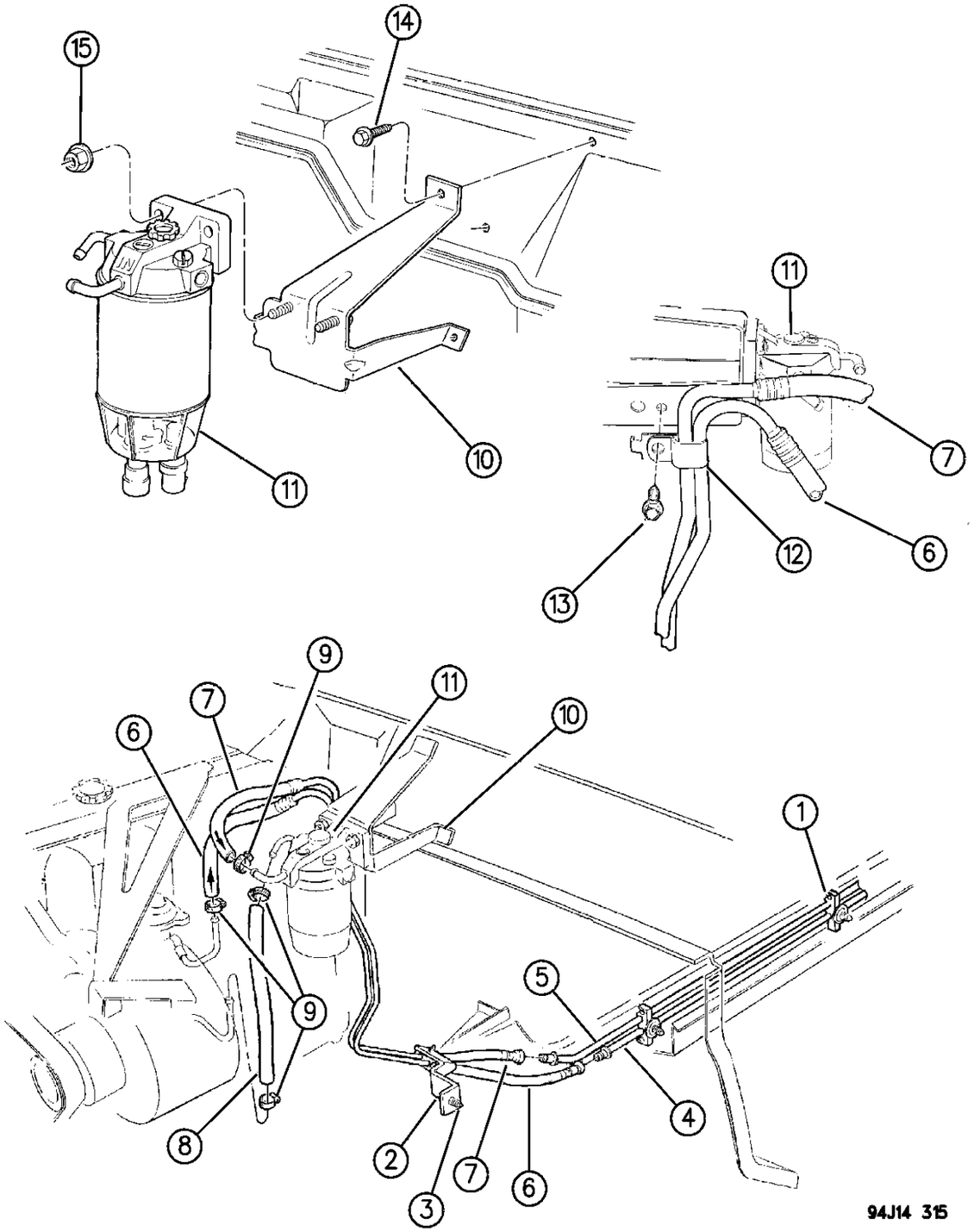

ITEM	PART NUMBER	QTY	BODY	MODEL	DESCRIPTION
1					CLIP, Tube
	3420 2371	1			4 Tube
2	5200 7187	1			BRACKET, Fuel Line
3	3420 1381	1			SCREW
4	5202 0131	1			TUBE, Fuel Return
5	5212 7509	1			TUBE, Fuel Supply
6					TUBE, w/Hose, Fuel Return
	5210 0021	1			1995
	5210 0079	1			1996
7					TUBE, w/Hose, Fuel Supply
	5210 0022	1			1995
	5210 0080	1			1996
8					HOSE, Fuel Filter to Pump
	5201 8774	1			1994-95
	5210 0084	1			1996
9	6502 081	6			CLAMP
10	5303 0515	1			BRACKET, Fuel Filter Mounting
11		1			FILTER, Fuel/Water
					Consists of:
	4723 899				1-Head Assembly
	4723 901				1-Valve Kit
	4723 905				1-Filter
	4723 906				1-Bowl
	4723 907				1-Drain
12	3420 2997	1			CLIP
13	6101 603	1			SCREW
14		3			SCREW, (Not Serviced)
15	6101 675	2			NUT
-	5212 7507	1			HOSE, Fuel Supply to Tank

MODEL CODES:

72=2 DR Wagon
74=4 DR Wagon
77=Open Body 93" Whlbase
78=Open Body 103" Whlbase - Export
T=2WD
J,N=4WD
U=4WD (RHD)

BODY STYLES:

YJ=Wrangler (4X4) "S"
Weangler (4X4) SE
Wrangler (4X4) Sahara
Wrangler (4X4) Renegade
XJ=Cherokee SE
Cherokee Sport
Cherokee Country
ZJ=Grand Cherokee SE
Grand Cherokee Laredo
Grand Cherolee Limited
ZG=Grand Cherokee European
Y1=Wrangler
X1=Cherokee
Z1=Grand Cherokee
KDX=Vehicles

AR = Use as Required - = Non Illustrated Part P.A.R. = Paint as Required

« RETURN TO GROUP INDEX

FUEL LINES, FRONT 2.5L DIESEL ENGINE ZG BODY
Figure 14-317

14-317B

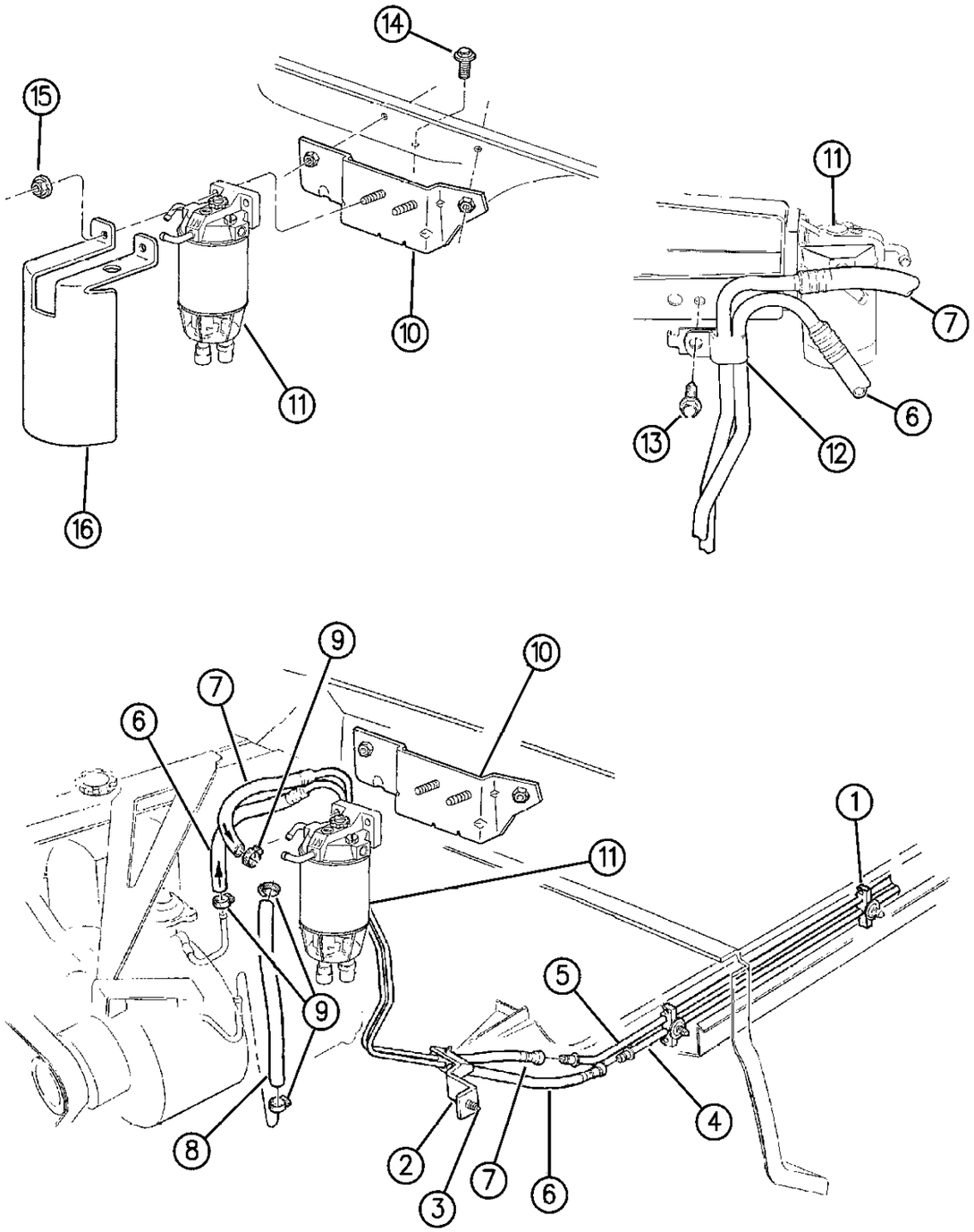

ITEM	PART NUMBER	QTY	BODY	MODEL	DESCRIPTION
1					CLIP, Tube
	3420 2371	1			4 Tube
2	5200 7187	1			BRACKET, Fuel Line
3	3420 1381	1			SCREW
4	5202 0131	1			TUBE, Fuel Return
5	5212 7509	1			TUBE, Fuel Supply
6	5201 8773	1			TUBE, w/Hose, Fuel Return
7	5212 7633	1			TUBE, w/Hose, Fuel Supply
8	5201 8774	1			HOSE, Fuel Supply
9	6502 081	6			CLAMP
10	5303 0386	1			BRACKET, Fuel Filter
11					FILTER, Fuel/Water
					Consists of:
	4856 912				1-Head Assembly
	4723 901				1-Valve Kit
	4723 905				1-Filter
	4723 906				1-Bowl
	4723 907				1-Drain
12	3420 2997	1			CLIP
13	6101 603	1			SCREW
14		3			SCREW, (Not Serviced)
15	6101 675	2			NUT
16	5303 0618	1			SHIELD, Filter

MODEL CODES:

72=2 DR Wagon
74=4 DR Wagon
77=Open Body 93" Whlbase
78=Open Body 103" Whlbase - Export
T=2WD
J,N=4WD
U=4WD (RHD)

BODY STYLES:

YJ=Wrangler (4X4) "S"
Weangler (4X4) SE
Wrangler (4X4) Sahara
Wrangler (4X4) Renegade
XJ=Cherokee SE
Cherokee Sport
Cherokee Country
ZJ=Grand Cherokee SE
Grand Cherokee Laredo
Grand Cherolee Limited
ZG=Grand Cherokee European
Y1=Wrangler
X1=Cherokee
Z1=Grand Cherokee
KDX=Vehicles

AR = Use as Required - = Non Illustrated Part P.A.R. = Paint as Required

« RETURN TO GROUP INDEX

FUEL LINES, REAR YJ BODY
Figure 14-320

14-320

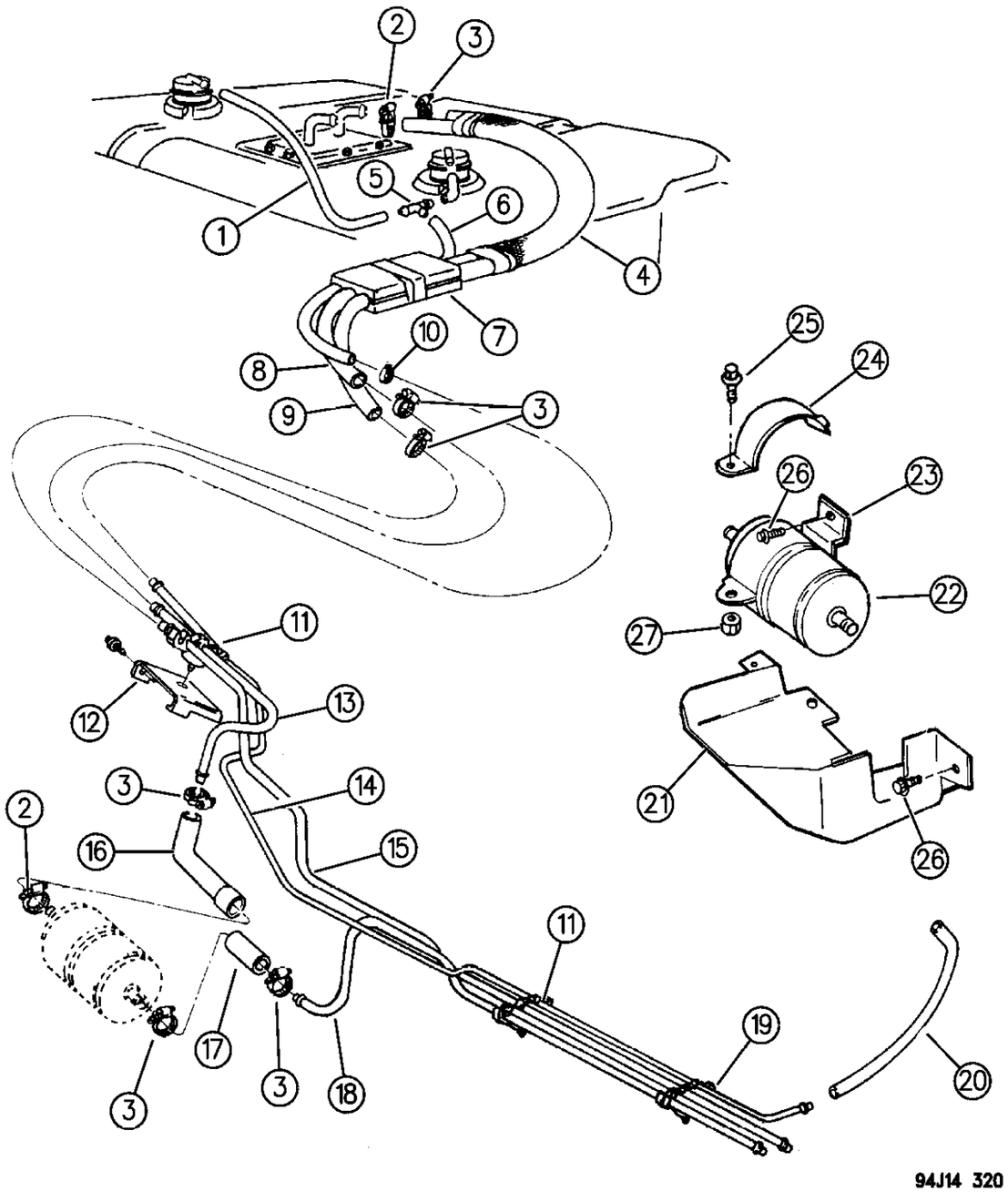

ITEM	PART NUMBER	QTY	BODY	MODEL	DESCRIPTION
1	4443 175	AR			HOSE, Rollover Valve to Tee
2					CLAMP
	6502 081	AR			
3	3420 2371	1			4 Tube
4	3200 1056	1			SLEEVE, Braided
5	J323 9827	1			TEE, (1/4x1/4x3/16)
6	4439 003	AR			HOSE, Tee to Vent Tube
7	5300 3646	1			GROMMET, Fuel Tube Support
8	5300 3607	1			HOSE, Tank to Supply Tube
9	5300 3606	1			HOSE, Tank to Return Tube
10		1			CLAMP, (Not Serviced)
11	3420 2371	5			CLIP
12		1			BRACKET, Fuel Clip Mounting, (Not Serviced)
13	5300 2195	1			TUBE, Rear Fuel Supply
	6101 675	2			NUT
12	3420 2997	1			CLIP
14	5300 3537	1			TUBE, Fuel Vent
15	5201 9103	1			TUBE, Intermediate Fuel Return
16	5300 4014	1			HOSE, Rear Supply Tube to Filter
17	4443 176	AR			HOSE, Inter. Supply to Filter
18	5201 9102	1			TUBE, Intermediate Fuel Supply
19	3420 2728	1			CLIP
20	4418 660	1			HOSE, Canister to Vent Tube
21	5201 7886	1			SHIELD, Filter
22					FILTER, Fuel
	3300 0076	1			
	5201 7724	1			Severe Use
23	5300 2199	1			BRACKET, Filter Mtg.
24	3300 0203	1			CLAMP, Filter
25	3420 1381	1			SCREW
26	3420 1381	1			SCREW
27	1150 3745	1			NUT

MODEL CODES:

72=2 DR Wagon
74=4 DR Wagon
77=Open Body 93" Whlbase
78=Open Body 103" Whlbase - Export
T=2WD
J,N=4WD
U=4WD (RHD)

BODY STYLES:

YJ=Wrangler (4X4) "S"
Weangler (4X4) SE
Wrangler (4X4) Sahara
Wrangler (4X4) Renegade
XJ=Cherokee SE
Cherokee Sport
Cherokee Country
ZJ=Grand Cherokee SE
Grand Cherokee Laredo
Grand Cherolee Limited
ZG=Grand Cherokee European
Y1=Wrangler
X1=Cherokee
Z1=Grand Cherokee
KDX=Vehicles

AR = Use as Required - = Non Illustrated Part P.A.R. = Paint as Required

« RETURN TO GROUP INDEX

FUEL LINES, REAR XJ BODY
Figure 14-330

14-330C

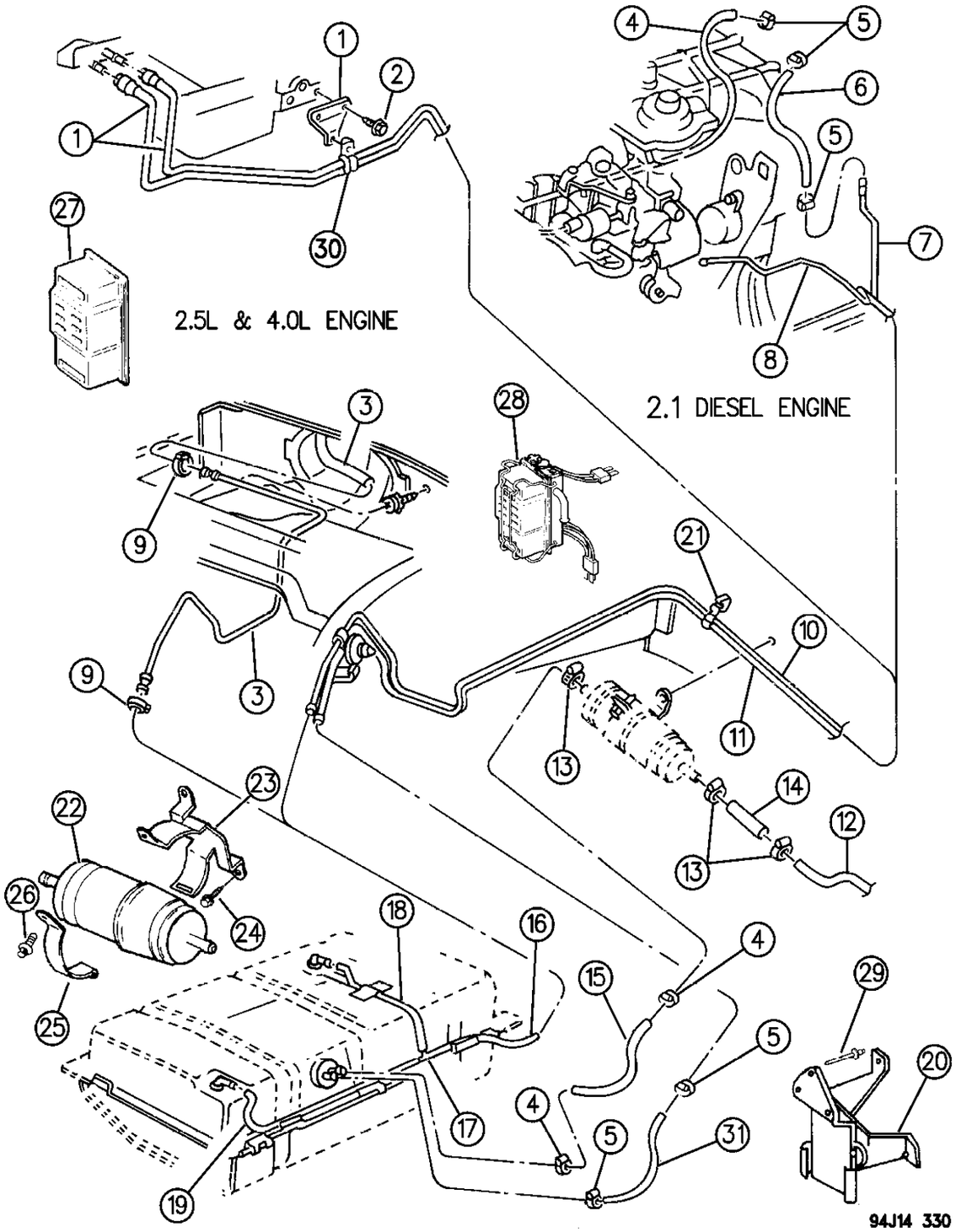

ITEM	PART NUMBER	QTY	BODY	MODEL	DESCRIPTION
1					TUBE, Fuel, w/Hose
					2.5L Eng., Supply
	5200 4876	1			1994-95
	5212 7900	1			1996
	5200 4878	1			2.5L Eng., Return
					4.0L Eng., Supply
	5201 8416	1			Supply
	5201 8417	1			4.0L Eng., Return
2		1			SCREW, (Not Serviced)
3					TUBE, Fuel Vent, Rear
	5212 7647	1			w/Evaporated Control System, RHD
	5300 1741	1			w/o Evaporated Control System
4		1			HOSE, Filter to Injector Pump, (Not Serviced)
5	6502 081	AR			CLAMP
6		1			HOSE, (Not Serviced)
7	5300 1194	1			TUBE, Fuel Supply, Diesel
8	5201 8446	1			TUBE, Fuel Return, Diesel
9		AR			CLAMP, Vent Tube, (Not Serviced)
10	5202 0131	1			TUBE, Chassis Fuel Return
11	5300 2651	1			TUBE, Fuel Vent
12	5210 2259	1			TUBE, Fuel Supply
13	6502 081	1			CLAMP
14	4443 176	AR			HOSE, Fuel Filter
15					HOSE, Fuel Return Tube to Tank
	5300 2189	1		XJ	1994
	5201 7844	1		XJ	1995-96
	5300 1428	1		X1	
16		1			HOSE, Vent Tube to Tee, (Not Serviced)
17	J321 0891	1			TEE, Connector
18	3300 0058	1			HOSE, Tee to Left Rollover Valve
19	5300 0194	1			HOSE, Tee to Right Rollover Valve
20	5300 2855	1			BRACKET, Filter Mtg., Diesel
21	3420 2371	1			CLIP, Quad Tube
22	3300 0076	1			FILTER, Fuel, Except Diesel Eng.
23					BRACKET, Filter
	5212 7895	1			
	5303 0514	1			Diesel Eng.
	5303 0515	1			Export
24	3420 1381	AR			SCREW
25	3300 0203	1			CLAMP, Filter
26	3420 1691	1			SCREW
27	8350 1902	1			ELEMENT, Fuel Filter, 2.1L Diesel Eng.

MODEL CODES:

72=2 DR Wagon
74=4 DR Wagon
77=Open Body 93" Whlbase
78=Open Body 103" Whlbase - Export
T=2WD
J,N=4WD
U=4WD (RHD)

BODY STYLES:

YJ=Wrangler (4X4) "S"
Weangler (4X4) SE
Wrangler (4X4) Sahara
Wrangler (4X4) Renegade
XJ=Cherokee SE
Cherokee Sport
Cherokee Country
ZJ=Grand Cherokee SE
Grand Cherokee Laredo
Grand Cherolee Limited
ZG=Grand Cherokee European
Y1=Wrangler
X1=Cherokee
Z1=Grand Cherokee
KDX=Vehicles

AR = Use as Required - = Non Illustrated Part P.A.R. = Paint as Required

FUEL LINES, REAR XJ BODY
Figure 14-330

14-330C

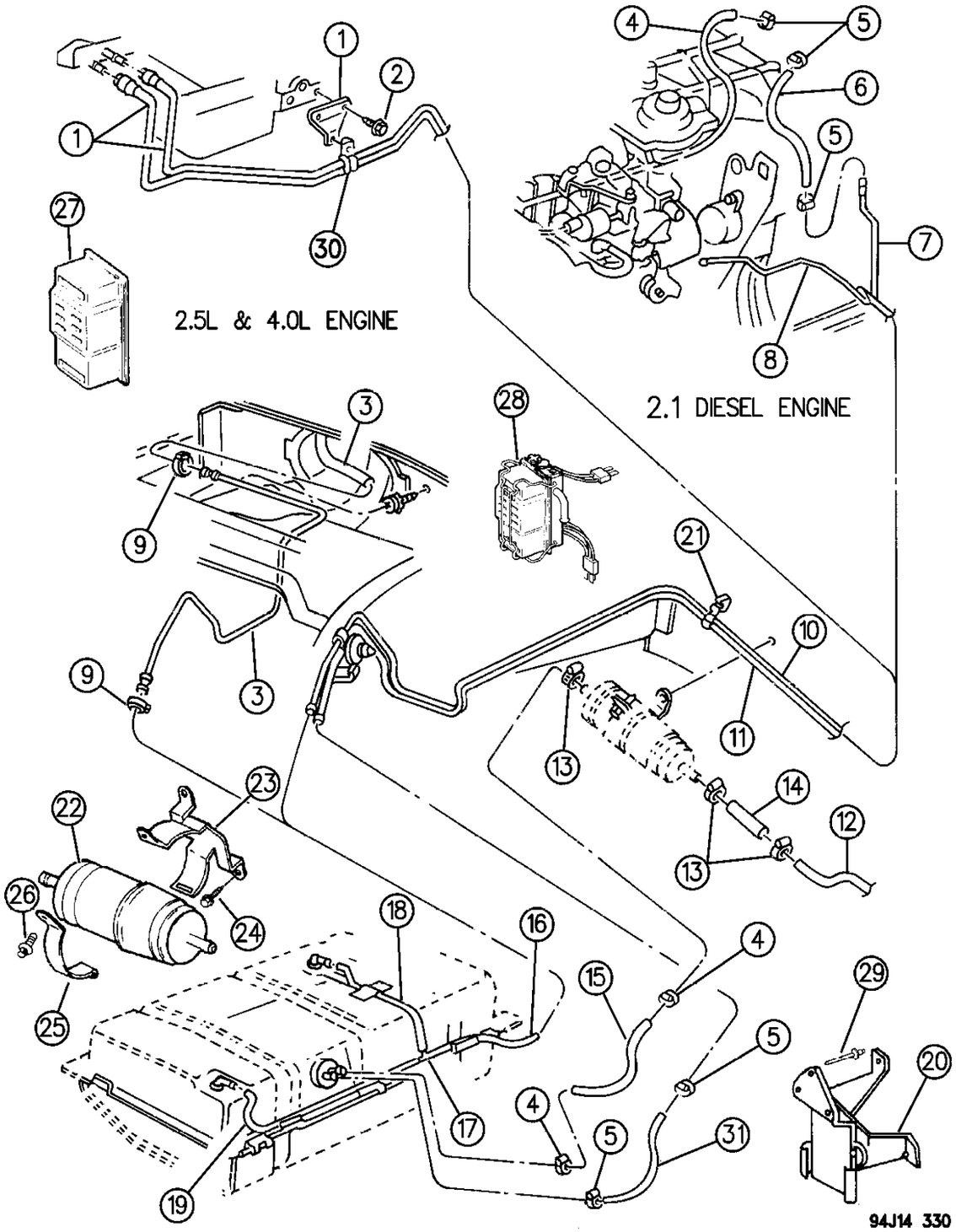

ITEM	PART NUMBER	QTY	BODY	MODEL	DESCRIPTION
28	5300 1742	1			FILTER ASSEMBLY, Fuel, 2.1L Diesel Eng. ***
29	J400 6990	3			RIVET
30	3420 2997	1			CLIP, 4.0L Eng.
31	5300 1662	1			HOSE, Supply Tube to Tank

MODEL CODES:

72=2 DR Wagon
74=4 DR Wagon
77=Open Body 93" Whlbase
78=Open Body 103" Whlbase - Export
T=2WD
J,N=4WD
U=4WD (RHD)

BODY STYLES:

YJ=Wrangler (4X4) "S"
Weangler (4X4) SE
Wrangler (4X4) Sahara
Wrangler (4X4) Renegade
XJ=Cherokee SE
Cherokee Sport
Cherokee Country
ZJ=Grand Cherokee SE
Grand Cherokee Laredo
Grand Cherolee Limited
ZG=Grand Cherokee European
Y1=Wrangler
X1=Cherokee
Z1=Grand Cherokee
KDX=Vehicles

AR = Use as Required - = Non Illustrated Part P.A.R. = Paint as Required

FUEL LINES, REAR 2.5L DIESEL ENGINE XJ BODY
Figure 14-335

14-335A

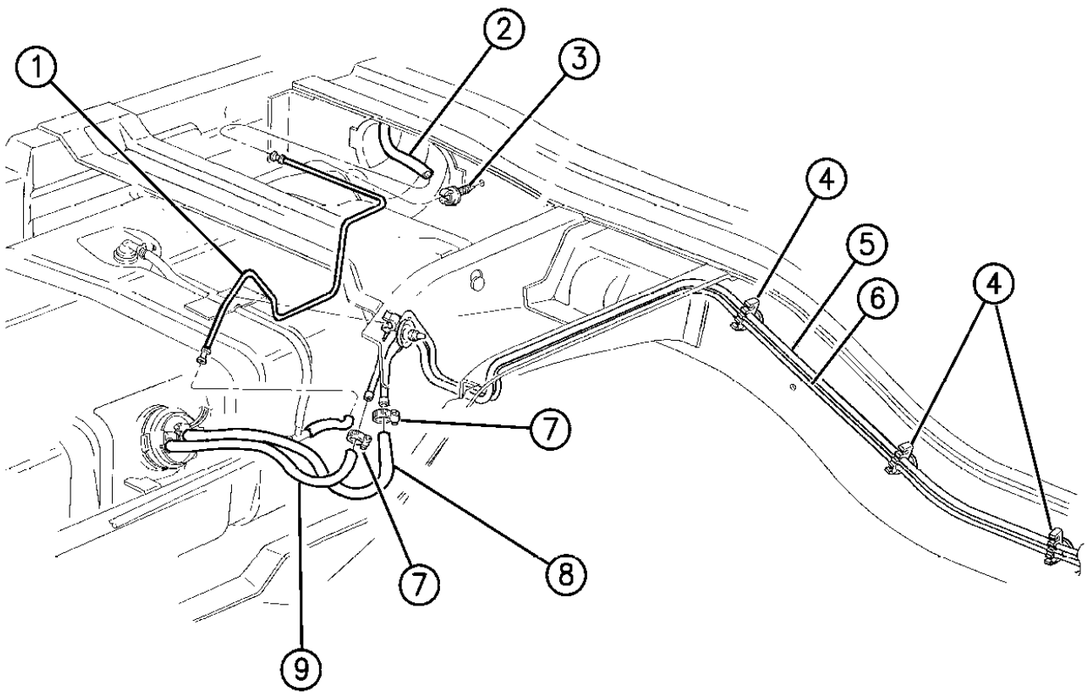

94J14 335

ITEM	PART NUMBER	QTY	BODY	MODEL	DESCRIPTION
1	5300 1741	1			TUBE, Fuel Vent, Rear
2	5212 7687	1			HOSE, Fuel Vent to Vent Cap
3	3200 0404	1			CLIP, Vent
4					CLIP, Tube
	3420 2371	1			4 Tube
5	5212 7509	1			TUBE, Fuel Supply
6	5202 0131	1			TUBE, Fuel Return
7	6502 081	6			CLAMP
8	5212 7507	1			HOSE, Fuel Supply to Tank
9	4443 176	1			HOSE, Fuel Return to Tank

MODEL CODES:

72=2 DR Wagon
74=4 DR Wagon
77=Open Body 93" Whlbase
78=Open Body 103" Whlbase - Export
T=2WD
J,N=4WD
U=4WD (RHD)

BODY STYLES:

YJ=Wrangler (4X4) "S"
Weangler (4X4) SE
Wrangler (4X4) Sahara
Wrangler (4X4) Renegade

XJ=Cherokee SE
Cherokee Sport
Cherokee Country

ZJ=Grand Cherokee SE
Grand Cherokee Laredo
Grand Cherolee Limited
ZG=Grand Cherokee European

Y1=Wrangler
X1=Cherokee
Z1=Grand Cherokee
KDX=Vehicles

AR = Use as Required - = Non Illustrated Part P.A.R. = Paint as Required

FUEL LINES, REAR ZJ BODY
Figure 14-340

14-340A

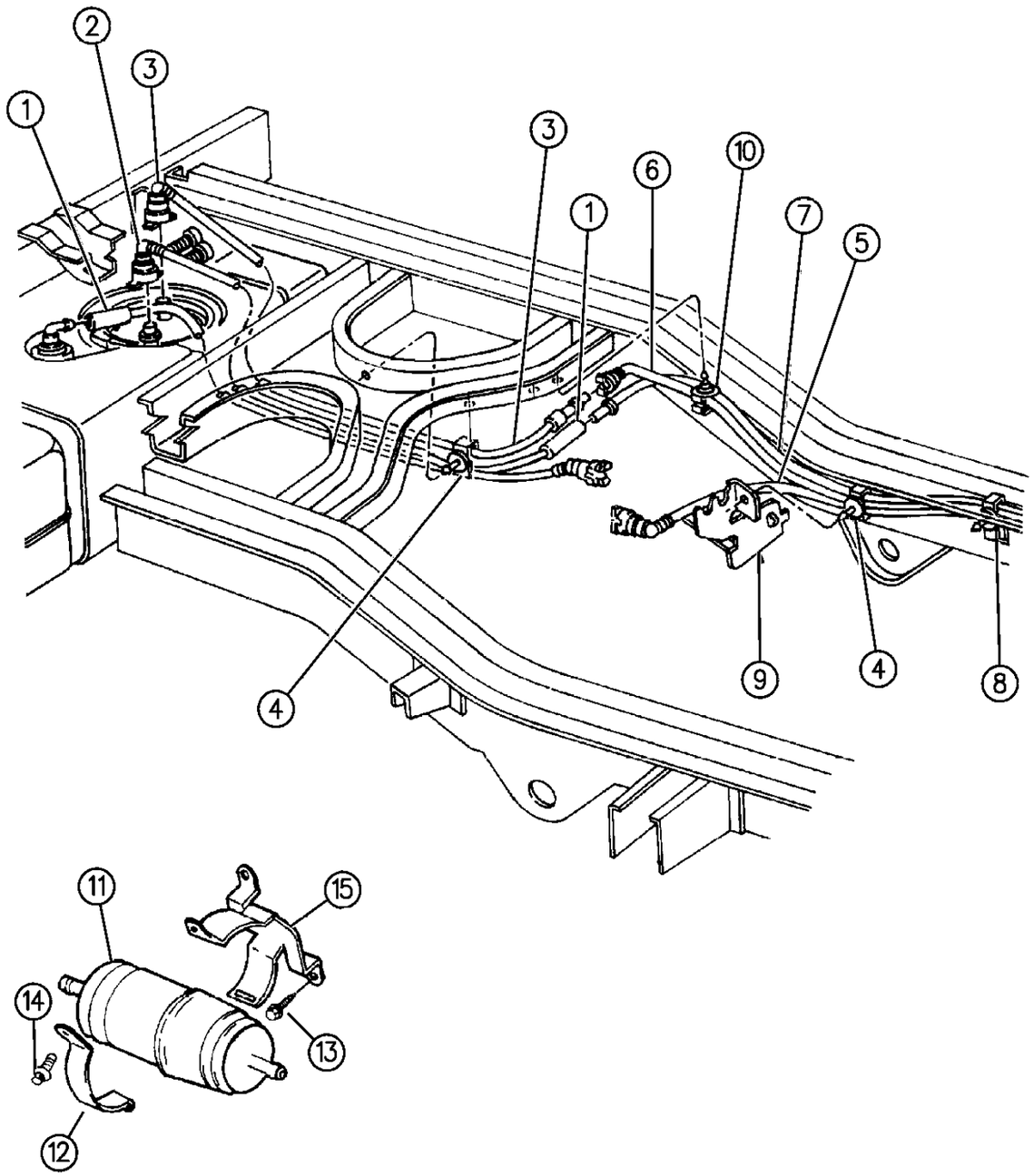

ITEM	PART NUMBER	QTY	BODY	MODEL	DESCRIPTION
1	5200 5110	1			TUBE, Fuel Vapor, Rear
2					TUBE, Fuel Supply, Rear
	5200 5108	1			1994
	5212 7724	1			1995-96
3	5200 5109	1			TUBE, Fuel Return, Rear
4					CLIP
	5201 7823	1			2 Tube
	3300 4037	AR			3 Tube
5					TUBE, Fuel Supply, Chassis
					4.0L Eng.
	5201 7978	1			1994
	5212 7632	1			1995
	5212 7890	1			1996
					5.2L Eng.
	5212 7625	1			1994
	5212 8117	1			1995
	5201 8803	1			1996
6					TUBE, Fuel Return
	5201 7979	1			4.0L Eng.
					5.2L Eng.
	5201 8813	1			1994
7					TUBE, Fuel Vapor
	5201 7980	1			Exc. Calif.
	5202 0521	1			Calif.
					HOSE, Carbon Canister
	5201 7720	1			Exc. Calif.
	5202 0523	1			Calif.
8	5200 5116	4			CLIP, 5 Tube
9	5200 7642	1			BRACKET
10					CLIP, (Not Serviced)
11	5200 5131	1			FILTER, Fuel
12	3300 0203	1			CLAMP, Filter
13	6101 603	AR			SCREW
14	3420 1691	1			SCREW
15	5201 7699	1			BRACKET, Filter

MODEL CODES:

72=2 DR Wagon
74=4 DR Wagon
77=Open Body 93" Whlbase
78=Open Body 103" Whlbase - Export
T=2WD
J,N=4WD
U=4WD (RHD)

BODY STYLES:

YJ=Wrangler (4X4) "S"
Weangler (4X4) SE
Wrangler (4X4) Sahara
Wrangler (4X4) Renegade
XJ=Cherokee SE
Cherokee Sport
Cherokee Country
ZJ=Grand Cherokee SE
Grand Cherokee Laredo
Grand Cherolee Limited
ZG=Grand Cherokee European
Y1=Wrangler
X1=Cherokee
Z1=Grand Cherokee
KDX=Vehicles

AR = Use as Required - = Non Illustrated Part P.A.R. = Paint as Required

« RETURN TO GROUP INDEX

FUEL LINES, REAR 2.5L DIESEL ENGINE ZG BODY
Figure 14-345

14-345

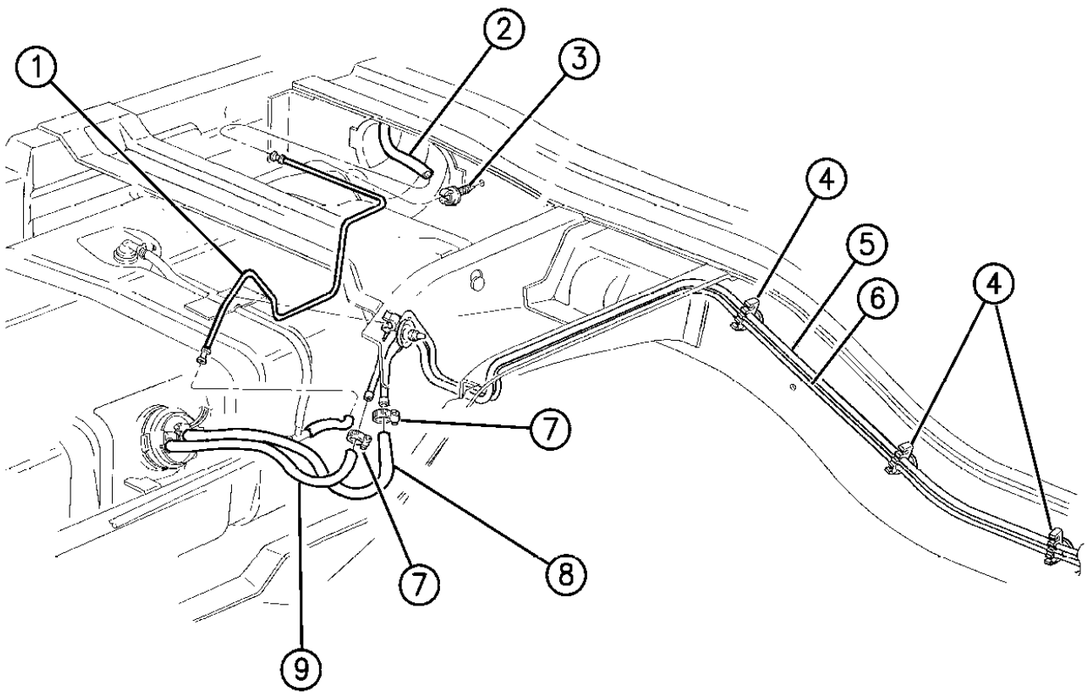

94J14 345

ITEM	PART NUMBER	QTY	BODY	MODEL	DESCRIPTION
1	5300 1741	1			TUBE, Fuel Vent, Rear
2	5212 7687	1			HOSE, Fuel Vent to Vent Cap
3	3200 0404	1			CLIP, Vent
4					CLIP, Tube
	3420 2371	1			4 Tube
5	5212 7509	1			TUBE, Fuel Supply
6	5202 0131	1			TUBE, Fuel Return
7	6502 081	6			CLAMP
8	5212 7507	1			HOSE, Fuel Supply to Tank
9	4443 176	1			HOSE, Fuel Return to Tank

MODEL CODES:

72=2 DR Wagon
74=4 DR Wagon
77=Open Body 93" Whlbase
78=Open Body 103" Whlbase - Export
T=2WD
J,N=4WD
U=4WD (RHD)

BODY STYLES:

YJ=Wrangler (4X4) "S"
Weangler (4X4) SE
Wrangler (4X4) Sahara
Wrangler (4X4) Renegade
XJ=Cherokee SE
Cherokee Sport
Cherokee Country
ZJ=Grand Cherokee SE
Grand Cherokee Laredo
Grand Cherolee Limited
ZG=Grand Cherokee European
Y1=Wrangler
X1=Cherokee
Z1=Grand Cherokee
KDX=Vehicles

AR = Use as Required - = Non Illustrated Part P.A.R. = Paint as Required

FUEL INJECTION SYSTEM 2.5L, 4.0L, 5.2L ENGINE YJ, XJ, ZJ BODY
Figure 14-410

14-410B

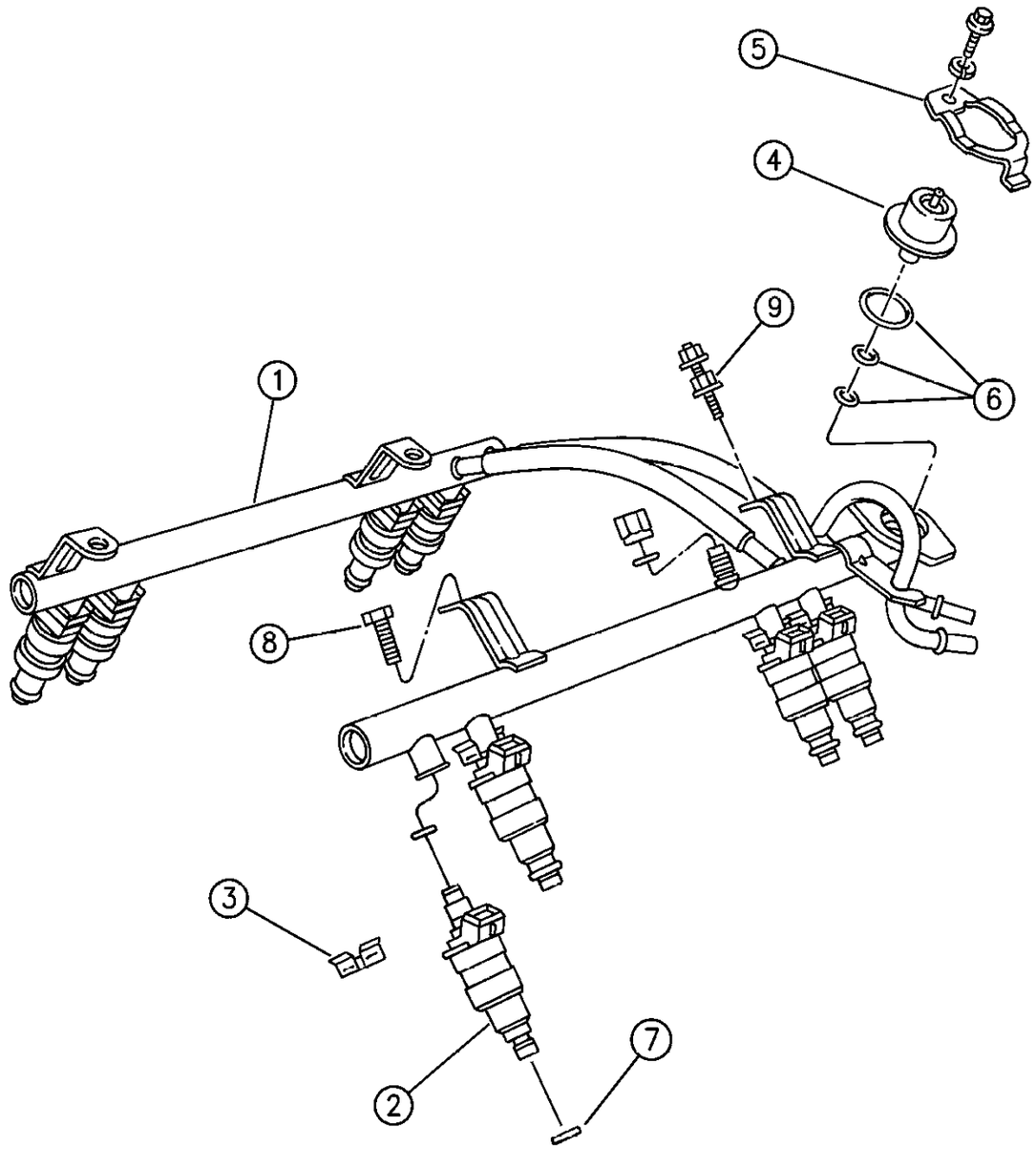

ITEM	PART NUMBER	QTY	BODY	MODEL	DESCRIPTION
	4740 382	1		X1	CARBURETOR, 2.5L Eng., Export
1					RAIL, Fuel
					2.5 Eng.
	5303 0437	1			1994-95
	5303 0977	1			1996
					4.0 Eng.
	5303 0435	1			1994
	5303 0435	1		XJ,YJ	1995
	5303 0699	1		ZJ	1995
	5303 0699	1			1996
					5.2 Eng., (Includes Front Supply/Return Lines)
	4762 465	1			1994
	5303 0598	1			1995-96
2					INJECTOR, Fuel
					2.5 Eng.
	5300 7232	4			1994-95
	5303 0778	4			1996
					4.0 Eng.
	5303 0343	6			1994-95
	5303 0778	6			1996
					5.2 Eng.
	5300 7809	8			1994
	5303 0262	8			1995
	5303 0778	8			1996
3	4418 257	AR			CLIP, Fuel Injector
4	5303 0001	1			REGULATOR, Fuel Pressure
5	4418 897	1			CLIP, Fuel Pressure Regulator
6	4418 903	1			O-RING PACKAGE, Regulator
7	4504 348	1			O-RING PACKAGE, Injector
8					SCREW, Fuel Rail
	J400 6986	2			1994-95
	6035 575	4			1996
9	J400 7534	2			STUD, Fuel Rail

MODEL CODES:

72=2 DR Wagon
74=4 DR Wagon
77=Open Body 93" Whlbase
78=Open Body 103" Whlbase - Export
T=2WD
J,N=4WD
U=4WD (RHD)

BODY STYLES:

YJ=Wrangler (4X4) "S"
Weangler (4X4) SE
Wrangler (4X4) Sahara
Wrangler (4X4) Renegade

XJ=Cherokee SE
Cherokee Sport
Cherokee Country

ZJ=Grand Cherokee SE
Grand Cherokee Laredo
Grand Cherolee Limited
ZG=Grand Cherokee European

Y1=Wrangler
X1=Cherokee
Z1=Grand Cherokee
KDX=Vehicles

AR = Use as Required - = Non Illustrated Part P.A.R. = Paint as Required

« RETURN TO GROUP INDEX

FUEL INJECTION SYSTEM 2.1L DIESEL ENGINE XJ BODY
Figure 14-420

14-420A

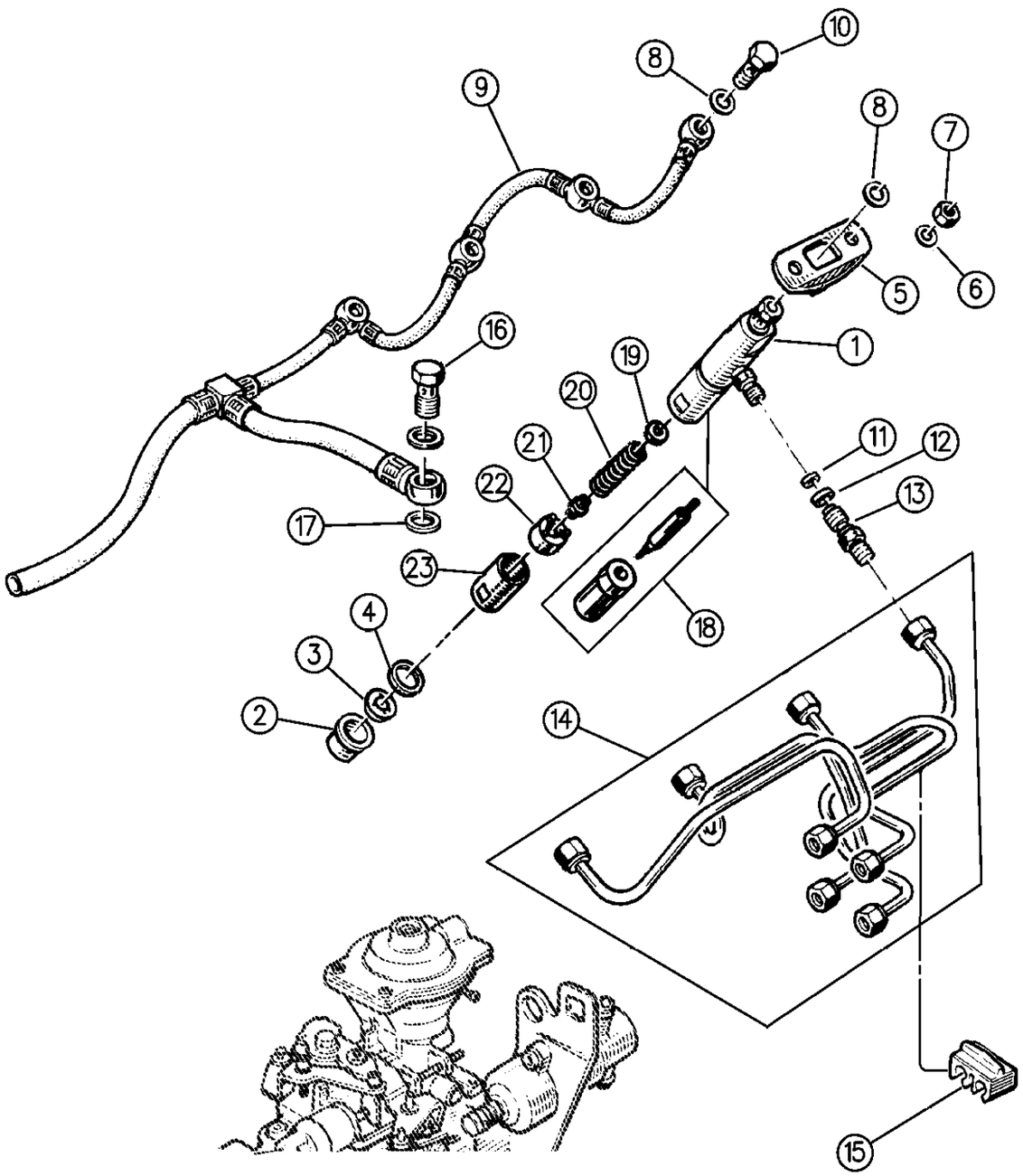

ITEM	PART NUMBER	QTY	BODY	MODEL	DESCRIPTION
1	JR77 5059	4			NOZZLE, Injector, J8S 814 Eng.
	J069 5922	4			HOUSING, Injector, J8S 890 Eng.
2					SHIELD, Heat
	T069 0543	4			17.5
	T069 0544	4			17.7
3	T066 3363	4			GASKET
4	T069 0542	4			O-RING
5	T067 9944	4			RETAINER, Injector
6	1150 0255	8			WASHER
7	T303 2157	8			NUT
8	T024 2149	8			SEAL
9	J073 1807	1			TUBE, Fuel Return
10	T480 5800	4			UNION, Fuel Return
11	T102 4658	4			WASHER
12	J301 5194	4			SEAL
13	T102 4659	4			CONNECTOR
14	T069 6528	1			TUBE, Injector
15	T102 7035	AR			SEPARATOR
16	T102 4765	1			UNION, Fuel Return
17	8350 2348	2			SEAL
18	J120 2182	4			PACKAGE, Needle and Seat, J8S 890 Eng.
19					WASHER, Spring, J8S 890 Eng.
	T102 4644	AR			1.00
	T102 4645	AR			1.10
	T102 4646	AR			1.20
	T102 4647	AR			1.30
	T102 4648	AR			1.40
	T102 4649	AR			1.50
	T102 4650	AR			1.60
	T102 4651	AR			1.70
	T102 4652	AR			1.80
	T102 4653	AR			1.90
20	T102 8073	1			SPRING, J8S 890 Eng.
21	T102 8074	1			CUP, J8S 890 Eng.
22	T102 4656	1			SPACER, J8S 890 Eng.
23	T102 4657	1			CAP, J8S 890 Eng.

MODEL CODES:

72=2 DR Wagon
74=4 DR Wagon
77=Open Body 93" Whlbase
78=Open Body 103" Whlbase - Export
T=2WD
J,N=4WD
U=4WD (RHD)

BODY STYLES:

YJ=Wrangler (4X4) "S"
Weangler (4X4) SE
Wrangler (4X4) Sahara
Wrangler (4X4) Renegade
XJ=Cherokee SE
Cherokee Sport
Cherokee Country
ZJ=Grand Cherokee SE
Grand Cherokee Laredo
Grand Cherolee Limited
ZG=Grand Cherokee European
Y1=Wrangler
X1=Cherokee
Z1=Grand Cherokee
KDX=Vehicles

AR = Use as Required - = Non Illustrated Part P.A.R. = Paint as Required

« RETURN TO GROUP INDEX

FUEL INJECTION SYSTEM 2.5L DIESEL ENGINE XJ BODY
Figure 14-425

14-425A

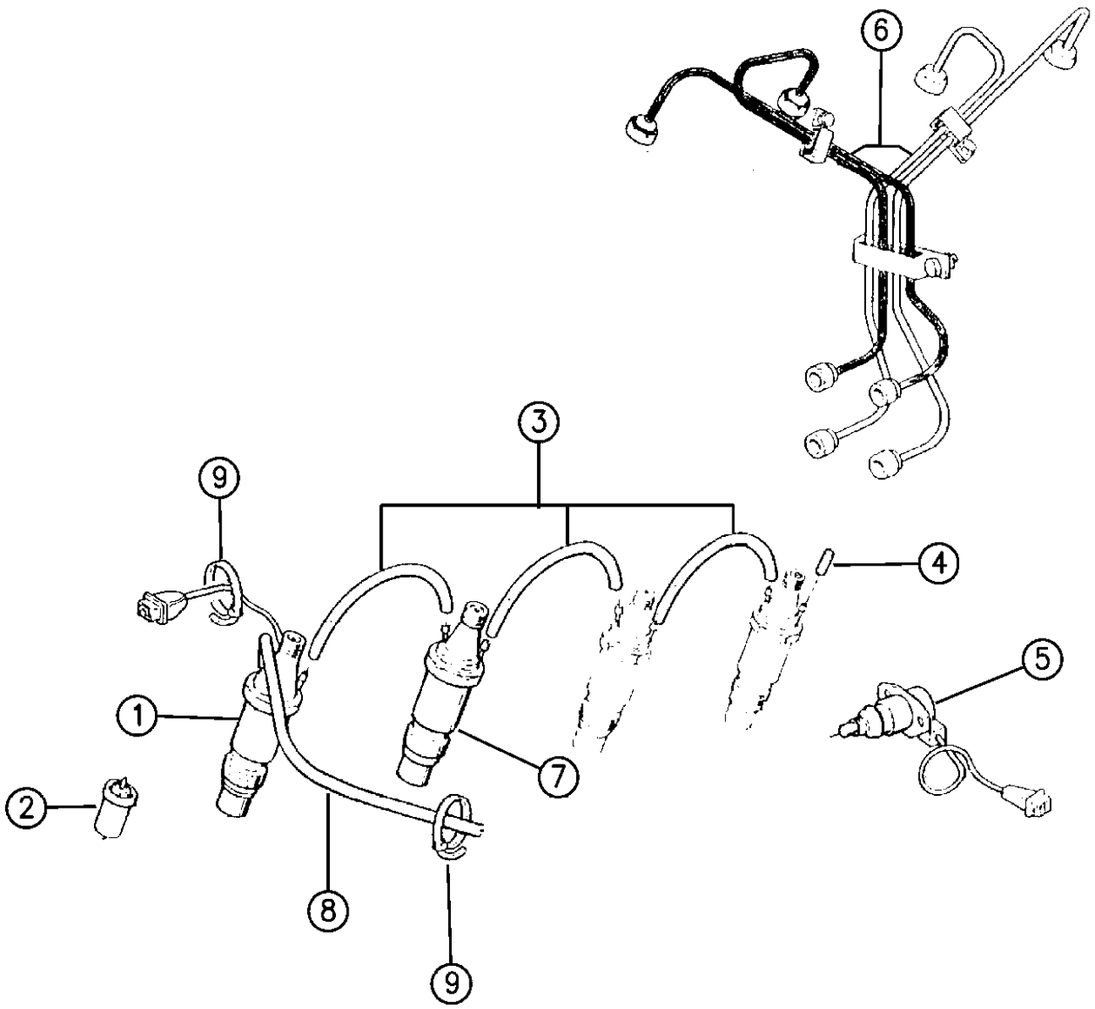

ITEM	PART NUMBER	QTY	BODY	MODEL	DESCRIPTION
1	4778 993	1			INJECTOR, w/Cable
2	4723 346	4			NOZZLE, Injector
3	4720 189	3			PIPE, Injector Spill
4	4720 197	1			PLUG, Spill Pipe
5	4797 786	1			ADVANCE, Automatic ***
6	4778 998	1			PIPE, Injector
7	4720 171	3			INJECTOR, Fuel
8	4720 190	1			PIPE, Injector Spill
9	4728 184	2			BAND, Plactic

MODEL CODES:

72=2 DR Wagon
74=4 DR Wagon
77=Open Body 93" Whlbase
78=Open Body 103" Whlbase - Export
T=2WD
J,N=4WD
U=4WD (RHD)

BODY STYLES:

YJ=Wrangler (4X4) "S"
Weangler (4X4) SE
Wrangler (4X4) Sahara
Wrangler (4X4) Renegade
XJ=Cherokee SE
Cherokee Sport
Cherokee Country
ZJ=Grand Cherokee SE
Grand Cherokee Laredo
Grand Cherolee Limited
ZG=Grand Cherokee European
Y1=Wrangler
X1=Cherokee
Z1=Grand Cherokee
KDX=Vehicles

94J14 425

AR = Use as Required - = Non Illustrated Part P.A.R. = Paint as Required

FUEL INJECTION SYSTEM 2.5L DIESEL ENGINE ZG BODY
Figure 14-430

14-430A

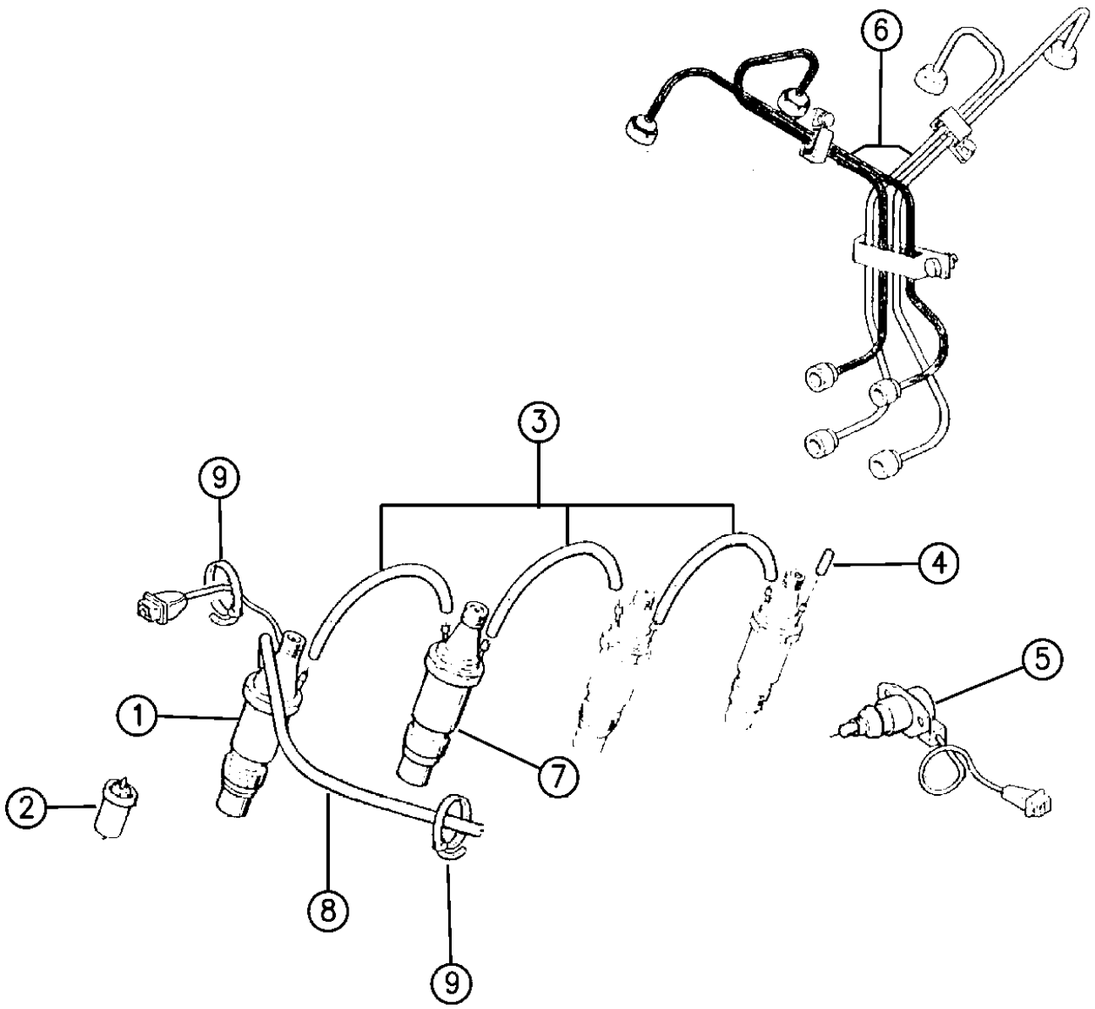

94J14 430

ITEM	PART NUMBER	QTY	BODY	MODEL	DESCRIPTION
1	4778 993	1			INJECTOR, w/Cable
2	4723 346	4			NOZZLE, Injector
3	4720 189	3			PIPE, Injector Spill
4	4720 197	1			PLUG, Spill Pipe
5	4797 786	1			ADVANCE, Automatic ***
6	4778 998	1			PIPE, Injector
7	4720 171	3			INJECTOR, Fuel
8	4720 190	1			PIPE, Injector Spill
9	4728 184	2			CLIP, Plastic

MODEL CODES:

72=2 DR Wagon
74=4 DR Wagon
77=Open Body 93" Whlbase
78=Open Body 103" Whlbase - Export
T=2WD
J,N=4WD
U=4WD (RHD)

BODY STYLES:

YJ=Wrangler (4X4) "S"
Weangler (4X4) SE
Wrangler (4X4) Sahara
Wrangler (4X4) Renegade
XJ=Cherokee SE
Cherokee Sport
Cherokee Country
ZJ=Grand Cherokee SE
Grand Cherokee Laredo
Grand Cherolee Limited
ZG=Grand Cherokee European
Y1=Wrangler
X1=Cherokee
Z1=Grand Cherokee
KDX=Vehicles

AR = Use as Required - = Non Illustrated Part P.A.R. = Paint as Required

FUEL INJECTION PUMP 2.1L DIESEL ENGINE XJ BODY
Figure 14-440

14-440

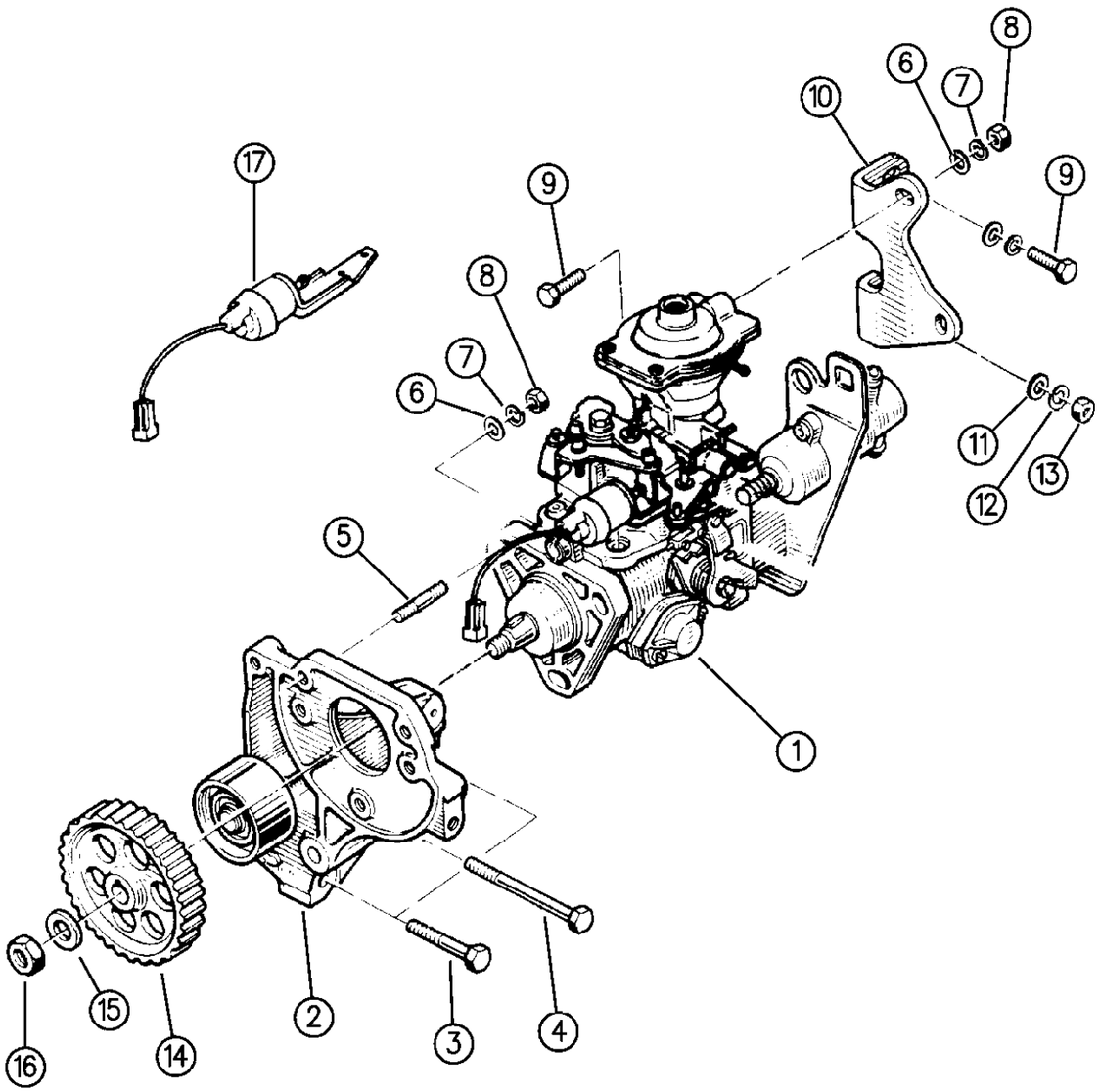

94J14 440

ITEM	PART NUMBER	QTY	BODY	MODEL	DESCRIPTION
1					PUMP ASSEMBLY, Injection ***
	T072 6944	1			J8S-814 Eng., Pump Tagged 2200R183
	J085 6048	1			J8S-890 Eng., Pump Tagged 2200R416
2	T600 2198	1			IDLER ASSEMBLY ***
3	J420 0438	1			BOLT
4	1150 5025	1			BOLT
5	T302 7191	3			STUD
6	1150 0255	5			WASHER, Flat
7	J012 0214	5			WASHER, Lock
8	T149 3047	5			NUT
9	T140 5667	3			BOLT
10	T068 4886	1			SUPPORT
11	T305 3043	1			WASHER, Flat
12	T140 2094	1			WASHER, Lock
13	T140 5676	1			NUT
14	T134 9585	1			SPROCKET
15	T066 2634	1			WASHER
16	T149 3071	1			NUT
17	8350 2349	1			SOLENOID, Idle Speed

MODEL CODES:

72=2 DR Wagon
74=4 DR Wagon
77=Open Body 93" Whlbase
78=Open Body 103" Whlbase - Export
T=2WD
J,N=4WD
U=4WD (RHD)

BODY STYLES:

YJ=Wrangler (4X4) "S"
Weangler (4X4) SE
Wrangler (4X4) Sahara
Wrangler (4X4) Renegade

XJ=Cherokee SE
Cherokee Sport
Cherokee Country

ZJ=Grand Cherokee SE
Grand Cherokee Laredo
Grand Cherolee Limited
ZG=Grand Cherokee European

Y1=Wrangler
X1=Cherokee
Z1=Grand Cherokee
KDX=Vehicles

AR = Use as Required - = Non Illustrated Part P.A.R. = Paint as Required

FUEL INJECTION PUMP 2.1L DIESEL ENGINE XJ BODY
Figure 14-440

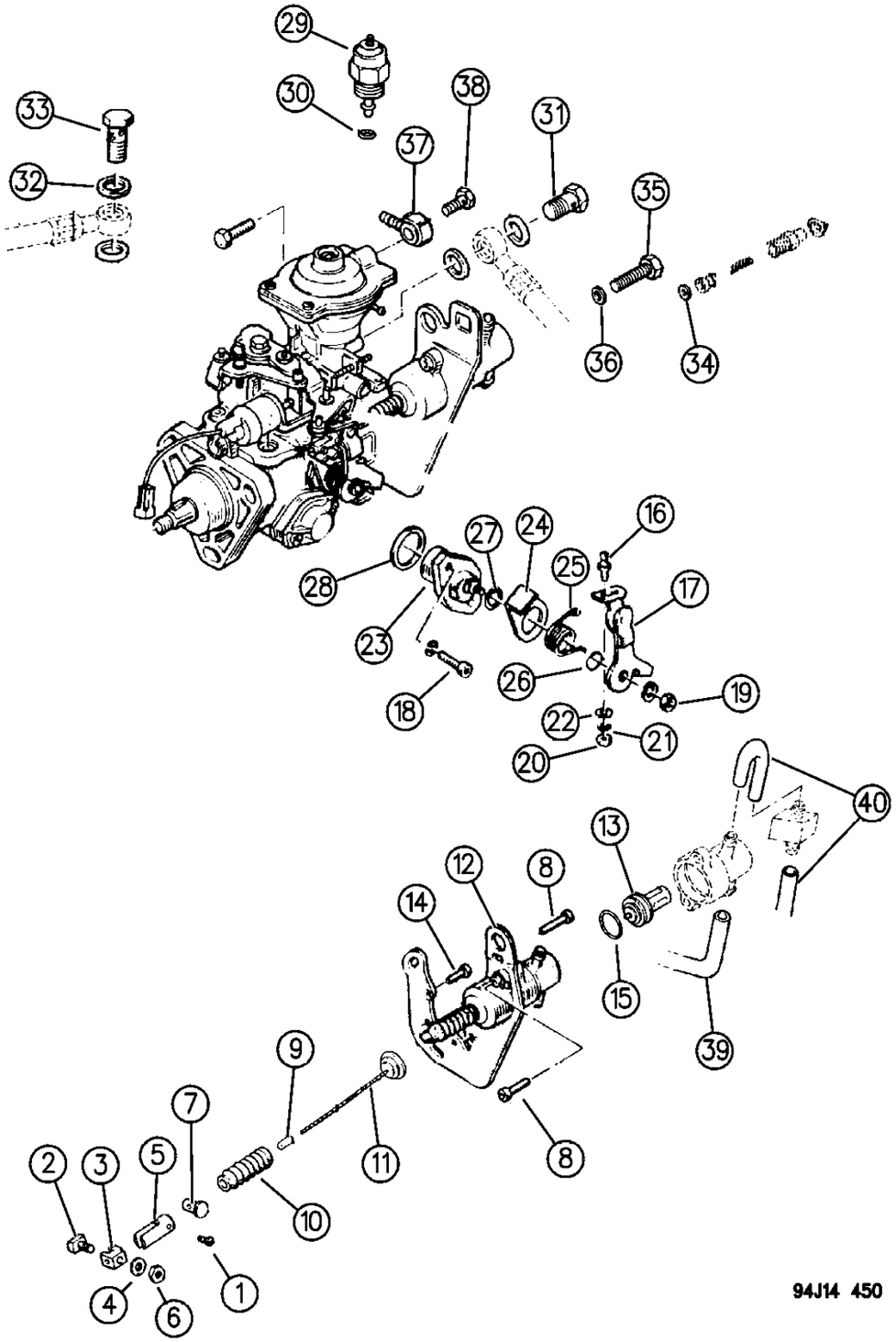

ITEM	PART NUMBER	QTY	BODY	MODEL	DESCRIPTION
1	8350 2339	1			SCREW, Set
2	8350 2341	1			SCREW, Stop
3	8350 2340	1			CLAMP
4	8350 2342	1			WASHER, Lock
5	8350 2338	1			CLEVIS ***
6	8350 2343	1			NUT
7	8350 2337	1			TRUNNION ***
8	J102 4660	2			BOLT
9	8350 2336	1			SLEEVE
10	8350 2335	1			BOOT ***
11	8350 2334	1			CABLE
12	J103 2285	1			SOLENOID
13	8350 2350	1			CAPSULE, Thermostatic ***
14	J102 9270	1			BOLT
15	8350 2333	1			O-RING
16	8350 2344	1			STUD, Ball
17	J102 7498	1			LEVER
18	J102 4813	2			BOLT
19	T303 2131	1			NUT
20	8350 2347	1			NUT
21	8350 2346	1			WASHER, Lock
22	8350 2345	1			WASHER, Flat
23	J120 1696	1			HOUSING
24	J103 0002	1			STOP
25	J102 7494	1			SPRING, Return
26	J102 7493	1			SEAL
27	J102 4812	1			SEAL
28	J102 7500	1			SEAL
29	8350 2331	1			SOLENOID, Fuel Shut-Off
30	8350 2332	1			SEAL
31	T102 4765	1			UNION, Fuel Return ***
32	8350 2348	4			GASKET
33	J073 0232	1			UNION, Fuel Inlet ***
34	8350 2328	1			GASKET
35	8350 2330	1			SCREW, Bleeder
36	8350 2329	1			GASKET
37	T070 6862	1			FITTING
38	T068 0758	1			UNION ***
39	J067 8478	1			HOSE, Inlet
40	T066 5293	AR			HOSE, Outlet

MODEL CODES:

72=2 DR Wagon
74=4 DR Wagon
77=Open Body 93" Whlbase
78=Open Body 103" Whlbase - Export
T=2WD
J,N=4WD
U=4WD (RHD)

BODY STYLES:

YJ=Wrangler (4X4) "S"
Weangler (4X4) SE
Wrangler (4X4) Sahara
Wrangler (4X4) Renegade
XJ=Cherokee SE
Cherokee Sport
Cherokee Country
ZJ=Grand Cherokee SE
Grand Cherokee Laredo
Grand Cherolee Limited
ZG=Grand Cherokee European
Y1=Wrangler
X1=Cherokee
Z1=Grand Cherokee
KDX=Vehicles

AR = Use as Required - = Non Illustrated Part P.A.R. = Paint as Required

« RETURN TO GROUP INDEX

FUEL INJECTION PUMP 2.5L DIESEL ENGINE XJ BODY
Figure 14-460

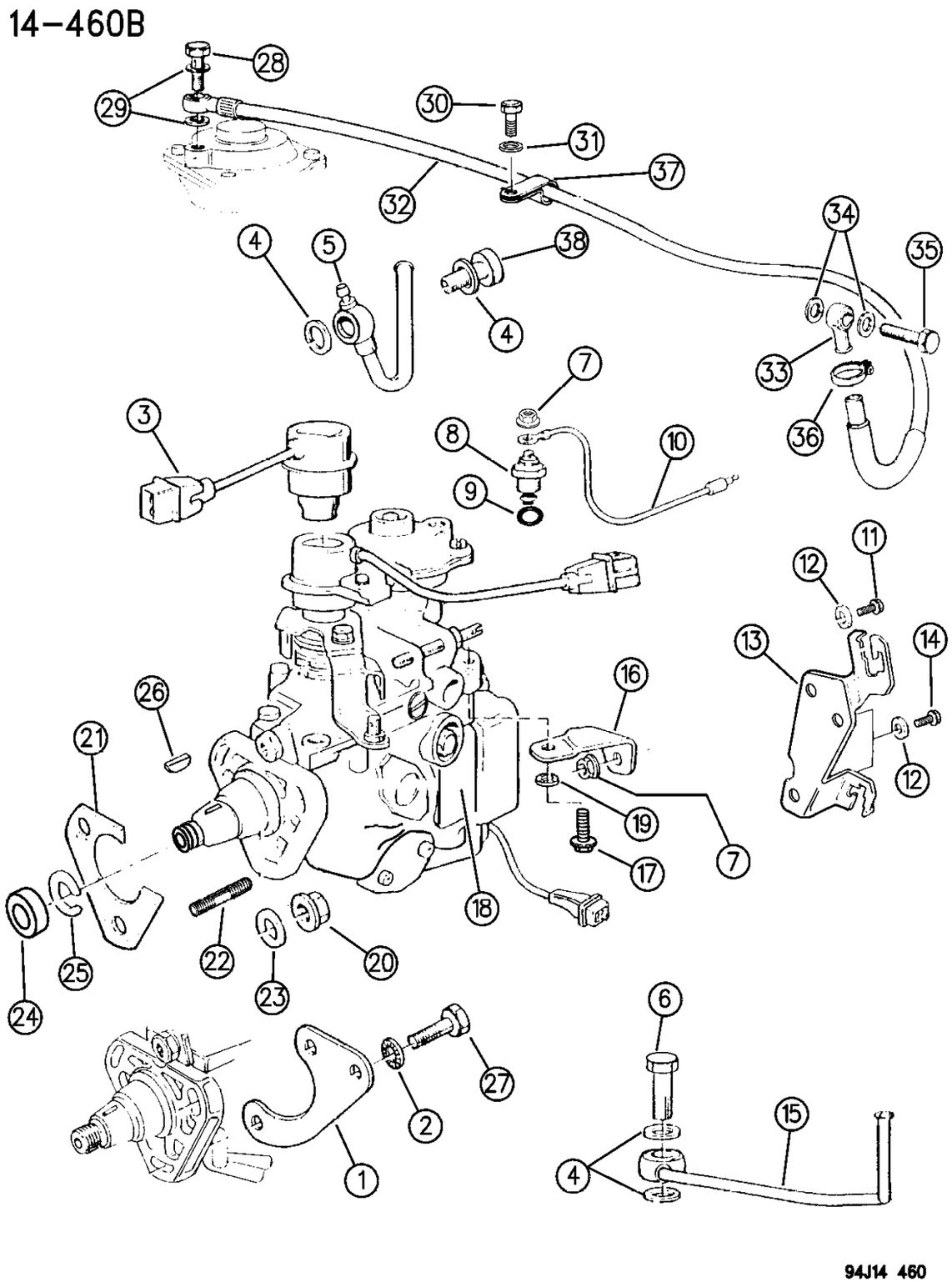

ITEM	PART NUMBER	QTY	BODY	MODEL	DESCRIPTION
1	4778 999	1			STIFFENER, Injection Pump ***
2	4723 223	1			WASHER
3					POTENTIOMETER
	4723 269	1			1994
	4797 800	1			1995-96
4	4720 703	4			WASHER
5					ADAPTOR, Spill Return Pump
	4778 994	1			1994-95
	4864 579	1			1996
6	4720 367	2			BOLT, Oil Pressure Transducer
7	4778 996	1			NUT
8	4723 264	1			SOLENOID, Fuel Shutoff
9	4723 266	1			O-RING, Solenoid
10	4741 820	1			LEAD, Solenoid ***
11	4798 309	1			SCREW
12	4723 168	3			WASHER
13	4778 997	1			BRACKET, Electrical Connectors
14	4720 372	1			BOLT
15	4796 399	1			TUBE, Fuel Feed to Pump, w/Wire Mesh
16	4797 752	1			BRACKET, Cable Support
17	4728 186	1			SCREW
18	4778 995	1			PUMP, Injection
19	4720 305	1			WASHER
20	4778 961	3			NUT
21	4720 196	1			GASKET, Pump
22	4723 241	3			STUD
23	4720 193	1			WASHER
24	4723 271	1			NUT
25	4723 272	1			WASHER
26	4720 198	1			KEY, Pump
27					SCREW
	4723 187	1			1994-95
	4864 559	1			1996
28	4723 183	1			BOLT, Banjo
29	4720 554	3			WASHER
30	4720 372	1			BOLT
31	4723 195	1			WASHER
32	4778 955	1			PIPE, Manifold to Injector Pump Sensor
33	4778 958	1			CONNECTOR, Banjo
34	4720 713	2			WASHER
35	4762 717	1			BOLT, Banjo
36	4778 962	1			CLIP, Hose

MODEL CODES:

72=2 DR Wagon
74=4 DR Wagon
77=Open Body 93" Whlbase
78=Open Body 103" Whlbase - Export
T=2WD
J,N=4WD
U=4WD (RHD)

BODY STYLES:

YJ=Wrangler (4X4) "S"
Weangler (4X4) SE
Wrangler (4X4) Sahara
Wrangler (4X4) Renegade

XJ=Cherokee SE
Cherokee Sport
Cherokee Country

ZJ=Grand Cherokee SE
Grand Cherokee Laredo
Grand Cherolee Limited
ZG=Grand Cherokee European

Y1=Wrangler
X1=Cherokee
Z1=Grand Cherokee
KDX=Vehicles

AR = Use as Required - = Non Illustrated Part P.A.R. = Paint as Required

FUEL INJECTION PUMP 2.5L DIESEL ENGINE XJ BODY
Figure 14-460

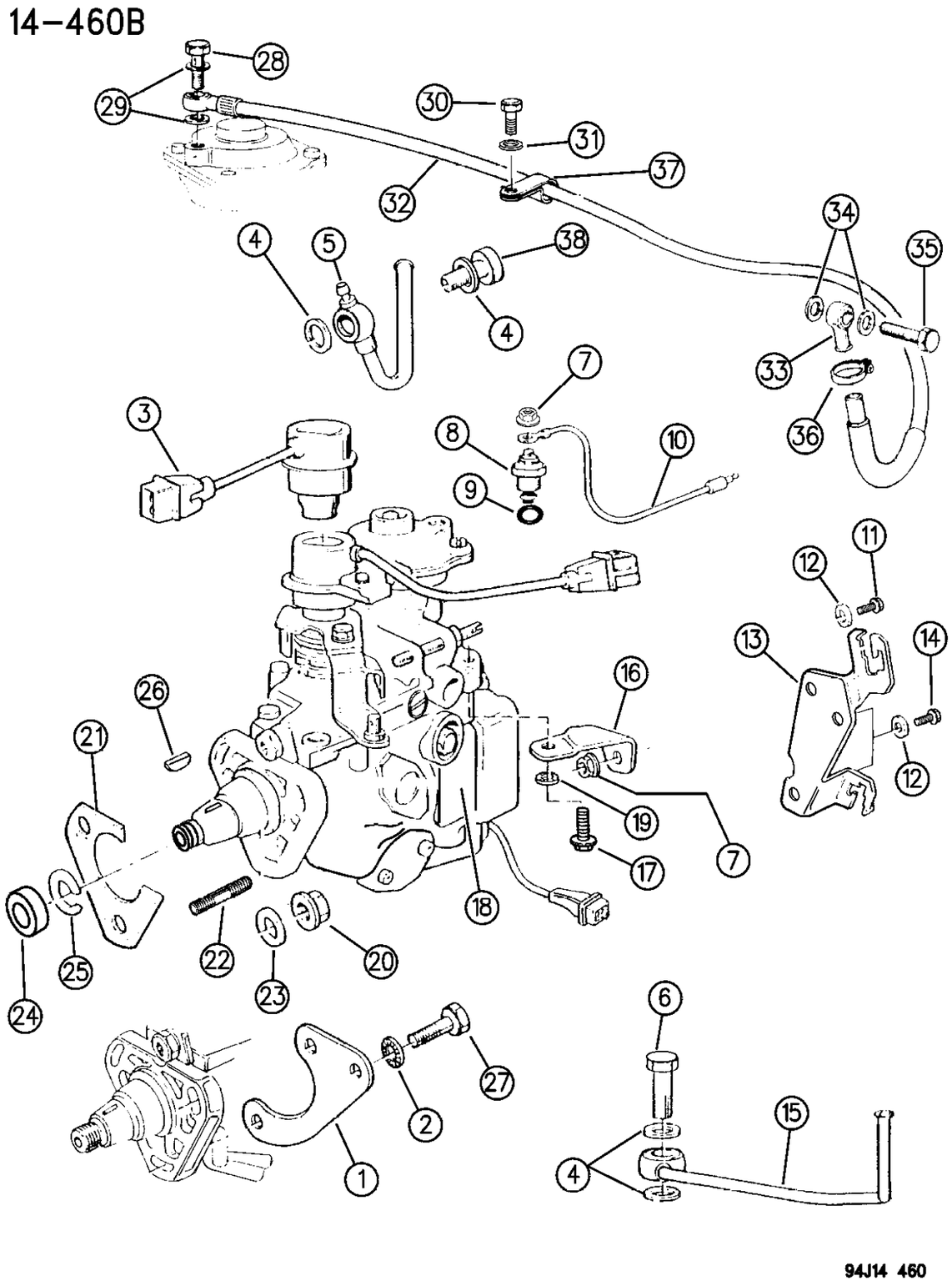

ITEM	PART NUMBER	QTY	BODY	MODEL	DESCRIPTION
37	4720 368	1			CLIP
38					VALVE, Pressure Relief
	4797 785	1			1994-95
	4874 444	1			1996

MODEL CODES:

72=2 DR Wagon
74=4 DR Wagon
77=Open Body 93" Whlbase
78=Open Body 103" Whlbase - Export
T=2WD
J,N=4WD
U=4WD (RHD)

BODY STYLES:

YJ=Wrangler (4X4) "S"
Weangler (4X4) SE
Wrangler (4X4) Sahara
Wrangler (4X4) Renegade
XJ=Cherokee SE
Cherokee Sport
Cherokee Country
ZJ=Grand Cherokee SE
Grand Cherokee Laredo
Grand Cherolee Limited
ZG=Grand Cherokee European
Y1=Wrangler
X1=Cherokee
Z1=Grand Cherokee
KDX=Vehicles

AR = Use as Required - = Non Illustrated Part P.A.R. = Paint as Required

FUEL INJECTION PUMP 2.5L DIESEL ENGINE ZG BODY
Figure 14-465

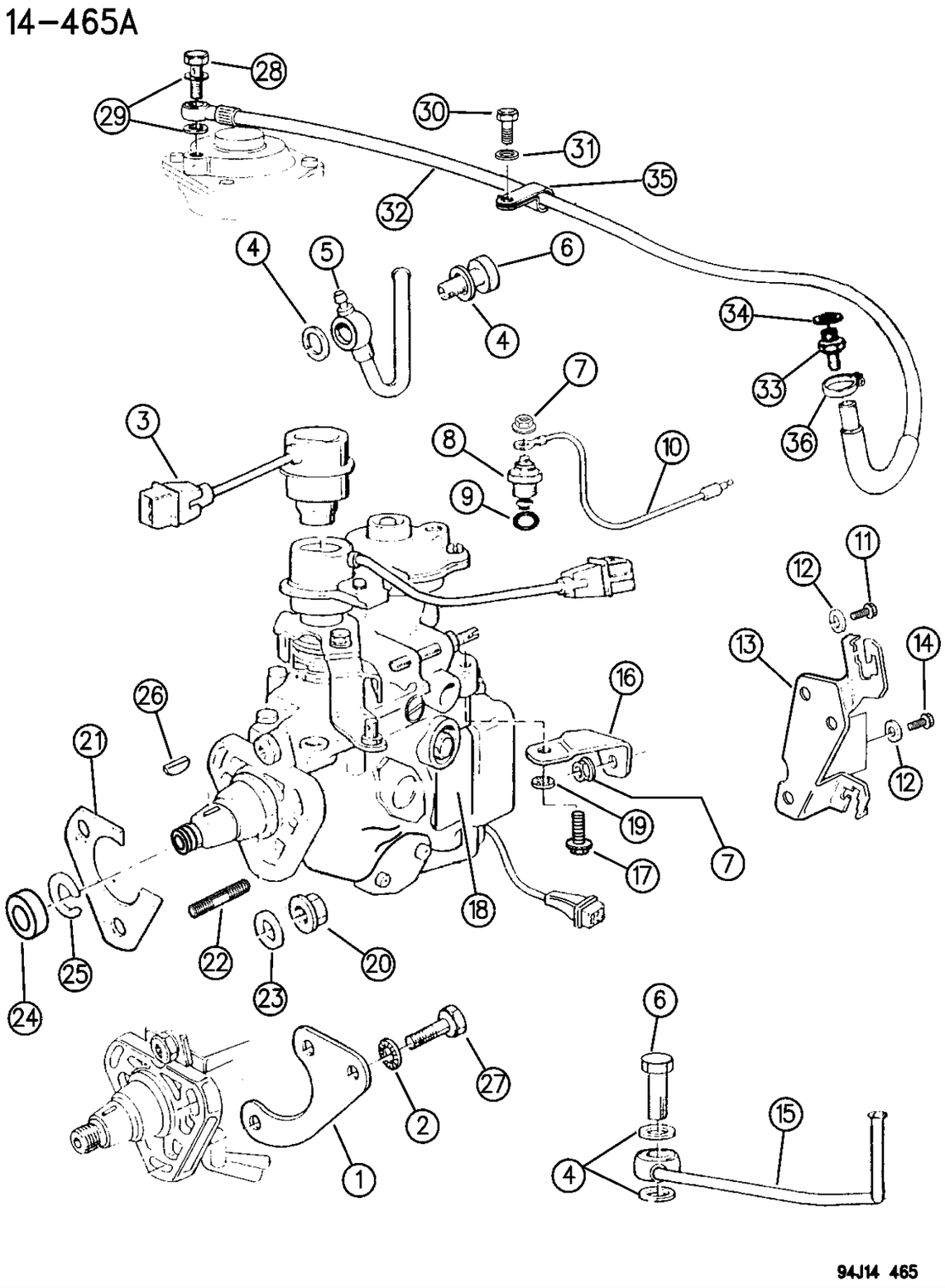

ITEM	PART NUMBER	QTY	BODY	MODEL	DESCRIPTION
1	4778 999	1			STIFFENER, Injection Pump ***
2	4723 223	1			WASHER
3	4797 800	1			POTENTIOMETER
4	4720 703	4			WASHER
5	4778 994	1			ADAPTOR, Spill Return Pump
6	4720 367	2			BOLT
7	4778 996	1			NUT
8	4723 264	1			SOLENOID, Fuel Shutoff
9	4723 266	1			O-RING, Solenoid
10	4741 820	1			LEAD, Solenoid ***
11	4798 309	1			SCREW
12	4723 168	3			WASHER
13	4778 997	1			BRACKET, Electrical Connectors
14	4720 372	1			BOLT
15					TUBE, Fuel Feed to Pump, w/Wire Mesh
	4796 399	1		XJ	
	4796 399	1		ZG	1995
	4864 581	1		ZG	1996
16	4797 752	1			BRACKET, Cable Support
17	4728 186	1			SCREW
18	4778 995	1			PUMP, Injection
19	4720 305	1			WASHER
20	4778 961	3			NUT
21	4720 196	1			GASKET, Pump
22	4723 241	3			STUD
23	4720 193	1			WASHER
24	4723 271	1			NUT
25	4723 272	1			WASHER
26	4720 198	1			KEY, Pump
27	4723 187	1			SCREW
28	4723 183	1			BOLT, Banjo
29	4720 554	3			WASHER
30	4720 372	1			BOLT
31	4720 702	1			WASHER
32	4778 955	1			PIPE, Manifold to Injector Pump Sensor
33	4796 170	1			ADAPTOR, Manifold Vacuum Pipe
34	4720 713	2			WASHER
35	4720 368	1			CLIP
36	4778 962	1			CLIP, Hose

MODEL CODES:

72=2 DR Wagon
74=4 DR Wagon
77=Open Body 93" Whlbase
78=Open Body 103" Whlbase - Export
T=2WD
J,N=4WD
U=4WD (RHD)

BODY STYLES:

YJ=Wrangler (4X4) "S"
Weangler (4X4) SE
Wrangler (4X4) Sahara
Wrangler (4X4) Renegade
XJ=Cherokee SE
Cherokee Sport
Cherokee Country
ZJ=Grand Cherokee SE
Grand Cherokee Laredo
Grand Cherolee Limited
ZG=Grand Cherokee European
Y1=Wrangler
X1=Cherokee
Z1=Grand Cherokee
KDX=Vehicles

AR = Use as Required - = Non Illustrated Part P.A.R. = Paint as Required

« RETURN TO GROUP INDEX

FUEL PUMP 2.5L CARBURETED ENGINE X1 BODY
Figure 14-510

14-510A

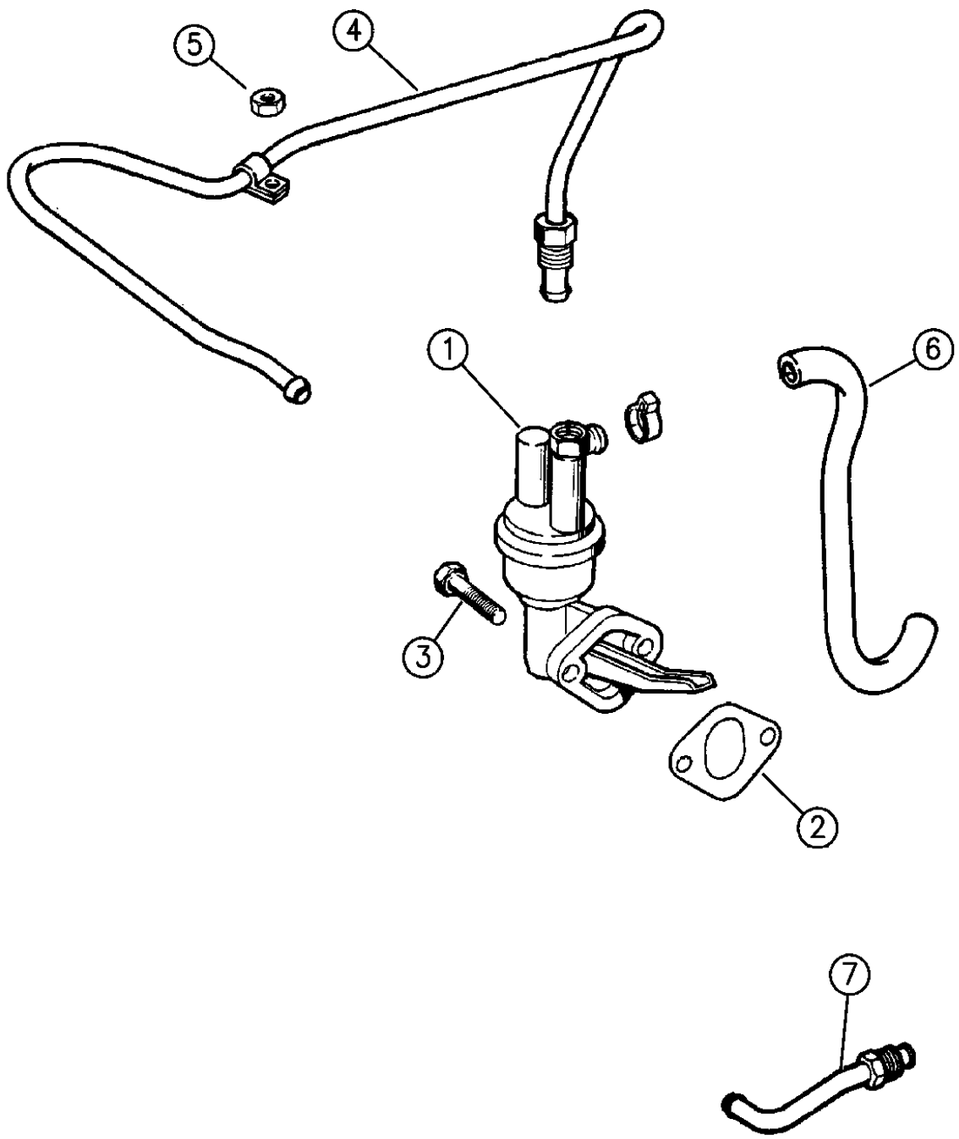

94J14 510A

ITEM	PART NUMBER	QTY	BODY	MODEL	DESCRIPTION
1	3300 2652	1			PUMP, Fuel
2	J317 4685	1			GASKET, Fuel Pump
3	6034 941	2			BOLT
4	5303 0658	1			TUBE, Fuel Pump to Filter
5	J941 6918	1			NUT
6	4443 176	AR			HOSE, Rubber
7	5300 2567	1			TUBE, Fuel Filter to Carb.

MODEL CODES:

72=2 DR Wagon
74=4 DR Wagon
77=Open Body 93" Whlbase
78=Open Body 103" Whlbase - Export
T=2WD
J,N=4WD
U=4WD (RHD)

BODY STYLES:

YJ=Wrangler (4X4) "S"
Weangler (4X4) SE
Wrangler (4X4) Sahara
Wrangler (4X4) Renegade

XJ=Cherokee SE
Cherokee Sport
Cherokee Country

ZJ=Grand Cherokee SE
Grand Cherokee Laredo
Grand Cherolee Limited
ZG=Grand Cherokee European

Y1=Wrangler
X1=Cherokee
Z1=Grand Cherokee
KDX=Vehicles

AR = Use as Required - = Non Illustrated Part P.A.R. = Paint as Required

« RETURN TO GROUP INDEX

FUEL PUMP AND SENDING UNIT YJ, XJ, ZJ BODY
Figure 14-520

14-520A

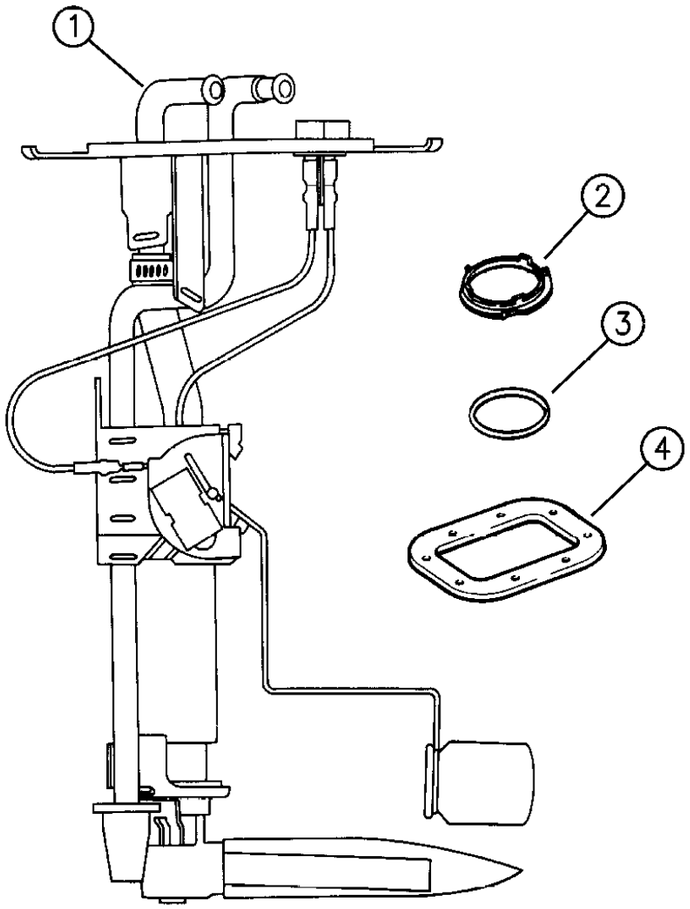

94J14 520

ITEM	PART NUMBER	QTY	BODY	MODEL	DESCRIPTION
1					UNIT, Fuel Pump and Sending
	5201 8390	1		YJ,Y1	15 Gal. Tank
					20 Gal. Tank
	5201 8391	1		YJ	
	5200 7263	1		Y1	Venezuela
	5201 8407	1		Y1	Egypt, Severe Use
	4762 964	1		XJ	1994-95
	5201 7738	1		XJ	1994-95, Diesel
	4798 941	1		XJ	1996, (Comes with Fuel Pressure Regulator)
	4798 976	1		XJ	1996, Diesel
	4762 964	1		X1	Venezuela
	5201 7904	1		X1	KDX
	5200 5099	1		ZJ	1994
	5201 8796	1		ZJ	1995
	4856 260	1		ZJ	1996
	4856 365	1		ZG	1995-96, Diesel Eng.
2					LOCK, Sending Unit
	5300 0584	1		XJ,X1	1994
	5212 7918	1		XJ,X1	1995, Up To 6-12-95
	5210 0109	1		XJ,X1	1995, After 6-12-95
	5210 0109	1		XJ,X1	1996
	5200 5389	1		ZJ	
3	5300 0575	1		XJ	O-RING, Sending Unit
4					GASKET, Sending Unit
	5201 7879	1		YJ	
	5201 8808	1		ZJ	

MODEL CODES:

72=2 DR Wagon
74=4 DR Wagon
77=Open Body 93" Whlbase
78=Open Body 103" Whlbase - Export
T=2WD
J,N=4WD
U=4WD (RHD)

BODY STYLES:

YJ=Wrangler (4X4) "S"
Weangler (4X4) SE
Wrangler (4X4) Sahara
Wrangler (4X4) Renegade

XJ=Cherokee SE
Cherokee Sport
Cherokee Country

ZJ=Grand Cherokee SE
Grand Cherokee Laredo
Grand Cherolee Limited
ZG=Grand Cherokee European

Y1=Wrangler
X1=Cherokee
Z1=Grand Cherokee
KDX=Vehicles

AR = Use as Required - = Non Illustrated Part P.A.R. = Paint as Required

THROTTLE BODY YJ, XJ, ZJ BODY
Figure 14-610

14-610

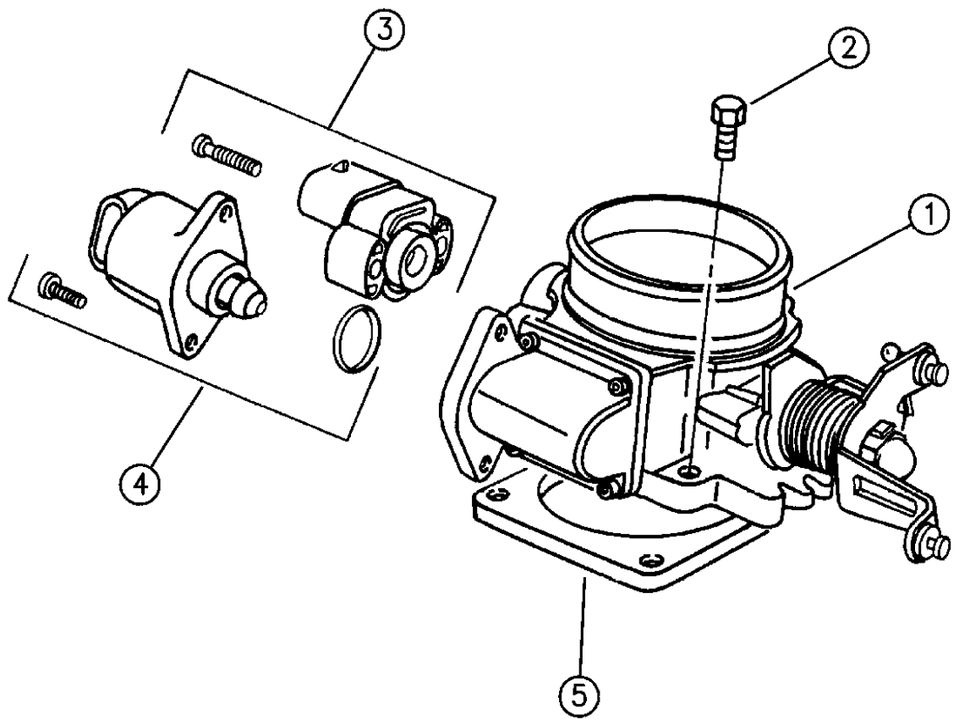

94J14 610

ITEM	PART NUMBER	QTY	BODY	MODEL	DESCRIPTION
1					THROTTLE BODY, w/A.I.S. and T.P.S. ***
					2.5L Eng.
	5303 0843	1			1994-95
	4856 106	1			1996
					4.0L Eng.
	5303 0844	1			1994-95
	4856 107	1			1996
					5.2L Eng.
	5303 1121	1			1994-95
	5303 0804	1			1996
-	5207 8102	1		XJ	SPRING, Throttle Return, 1996, 2.5L,4.0L
2	6101 810	4			SCREW, Throttle Body to Intake Manifold
3					SENSOR, Throttle Position
	4761 871AB	1			2.5L, 4.0L Eng., with O-Ring
	4778 463	1			5.2L, 5.9L Eng.
4					MOTOR, Auto Idle Speed
	4798 376	1			2.5L Eng.
	4798 377	1			4.0L Eng.
	5303 0657	1			5.2L Eng.
5					GASKET, Throttle Body to Intake Manifold
	5300 7543	1		YJ,XJ	2.5L, 4.0L Eng.
	5300 7543	1		ZJ	4.0L Eng.
	5303 0541	1			5.2L Eng.

MODEL CODES:

72=2 DR Wagon
74=4 DR Wagon
77=Open Body 93" Whlbase
78=Open Body 103" Whlbase - Export
T=2WD
J,N=4WD
U=4WD (RHD)

BODY STYLES:

YJ=Wrangler (4X4) "S"
Weangler (4X4) SE
Wrangler (4X4) Sahara
Wrangler (4X4) Renegade

XJ=Cherokee SE
Cherokee Sport
Cherokee Country

ZJ=Grand Cherokee SE
Grand Cherokee Laredo
Grand Cherolee Limited
ZG=Grand Cherokee European

Y1=Wrangler
X1=Cherokee
Z1=Grand Cherokee
KDX=Vehicles

AR = Use as Required - = Non Illustrated Part P.A.R. = Paint as Required

« RETURN TO GROUP INDEX

TURBOCHARGER 2.1L DIESEL ENGINE XJ BODY
Figure 14-620

14–620

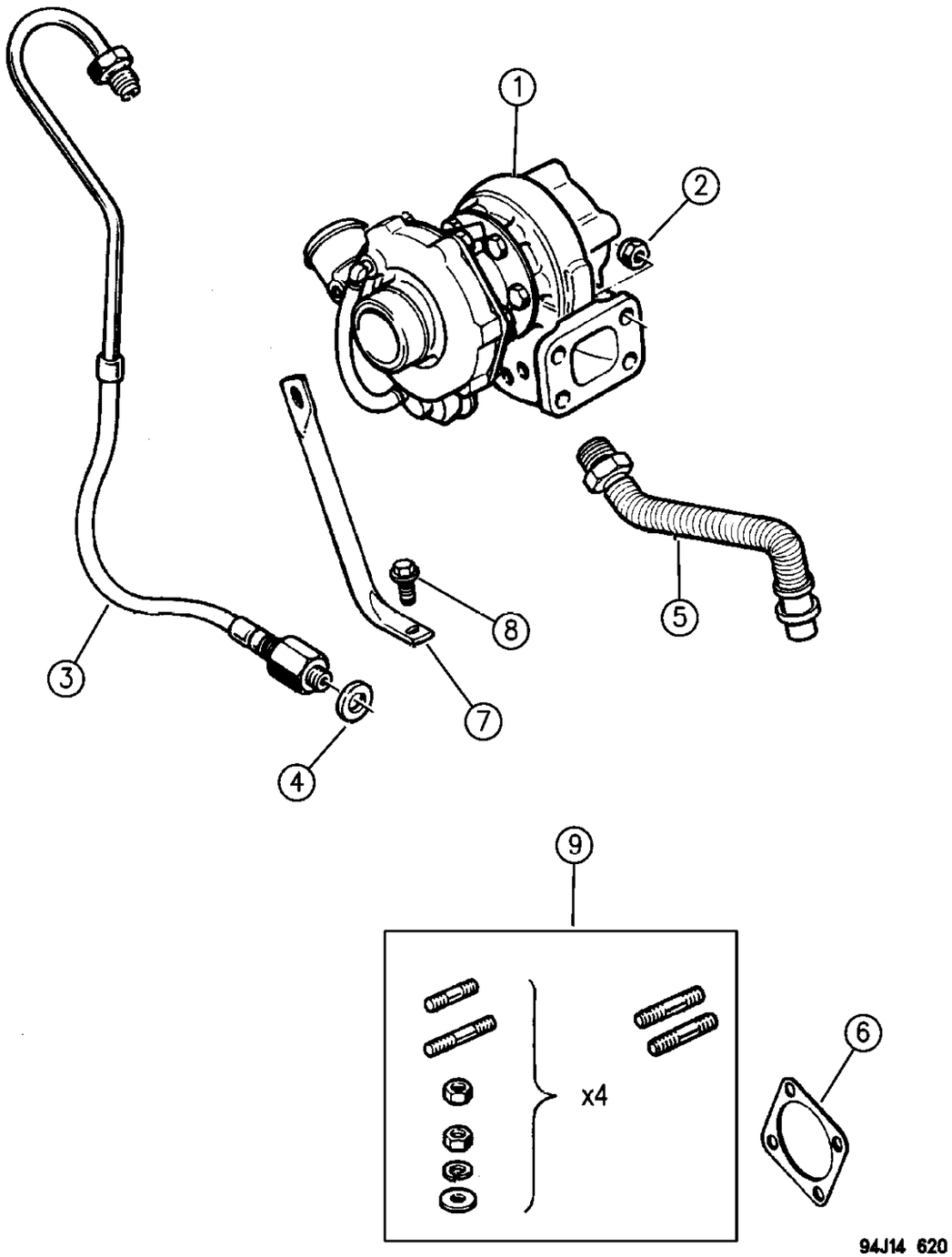

ITEM	PART NUMBER	QTY	BODY	MODEL	DESCRIPTION
	JR05 4351	1			PACKAGE, Reman Turbo
1	JR77 5043	1			TURBO CHARGER
2	T303 4081	4			NUT
3	T072 7702	1			TUBE, Oil Supply
4	T777 7650	1			GASKET
5	8350 7177	1			HOSE, Oil Return
6	T069 5216	1			GASKET
7	3300 2467	1			BRACKET, Turbo Support
8	3420 1818	1			SCREW
9	T146 2991	1			PACKAGE, Hardware

MODEL CODES:

72=2 DR Wagon
74=4 DR Wagon
77=Open Body 93" Whlbase
78=Open Body 103" Whlbase - Export
T=2WD
J,N=4WD
U=4WD (RHD)

BODY STYLES:

YJ=Wrangler (4X4) "S"
Weangler (4X4) SE
Wrangler (4X4) Sahara
Wrangler (4X4) Renegade

XJ=Cherokee SE
Cherokee Sport
Cherokee Country

ZJ=Grand Cherokee SE
Grand Cherokee Laredo
Grand Cherolee Limited
ZG=Grand Cherokee European

Y1=Wrangler
X1=Cherokee
Z1=Grand Cherokee
KDX=Vehicles

AR = Use as Required - = Non Illustrated Part P.A.R. = Paint as Required

« RETURN TO GROUP INDEX

CARBURETOR 2.5L ENGINE X1 BODY
Figure 14-625

14-625A

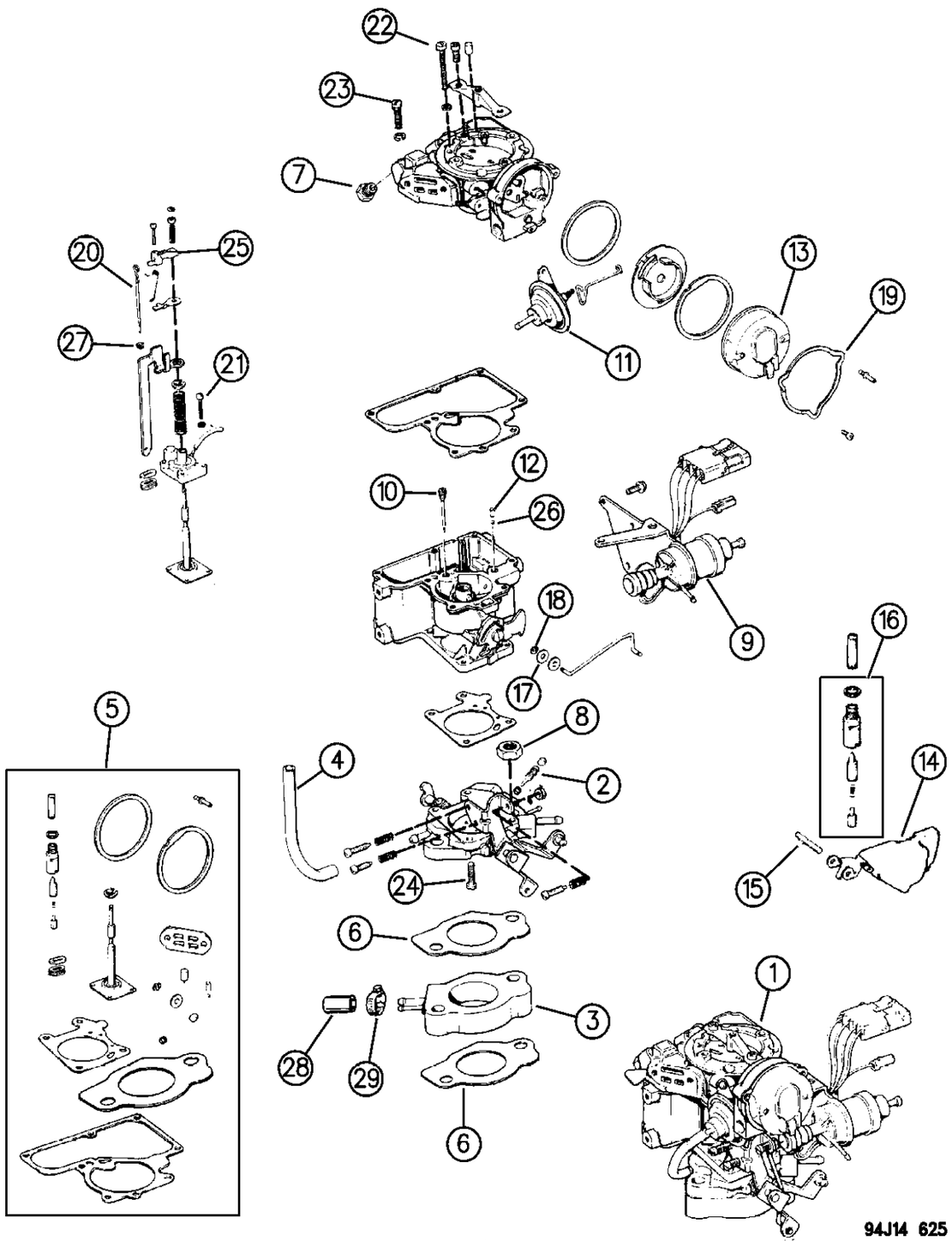

ITEM	PART NUMBER	QTY	BODY	MODEL	DESCRIPTION
1	4740 382	1			CARBURETOR, Manual Trans.
	J323 8420	1			CAP, EGR Port
2	8350 0455	1			SCREW, Idle Mixture
3	5300 0616	1			INSULATOR, Carburetor
4	J812 5812	AR			HOSE
5	8330 0085	1			PACKAGE, Carburetor Repair
6	5300 0617	2			GASKET, Carburetor
7	J013 7406	1			CONNECTOR
8	6034 984	2			NUT
9	8350 2116	1			SOLENOID, Throttle
10	4856 093	1			JET, Low Speed
11	8350 2112	1			DIAPHRAGM, Choke
12	J812 0149	1			WEIGHT, Check Ball
13	8350 0921	1			COIL, Choke
14	8350 0454	1			FLOAT, Carburetor
15	J812 4315	1			PIN, Float
16	8350 0932	1			NEEDLE, w/Seat ***
17	8350 0456	1			BUSHING, Choke Rod
18	J812 1249	1			CLIP
19	J812 6555	1			RETAINER, Choke Rod
20	8350 2114	1			ROD, Metering
21	J320 6433	4			SCREW
22	J320 7738	3			SCREW
23	J812 5858	4			SCREW
24	J812 0222	4			SCREW
25	8350 0460	1			ARM, Metering Rod
26	J812 0145	1			BALL, Discharge Check
27	8350 2115	1			JET, Metering Rod
28	J322 7272	1			CAP
29	6502 081	1			CLAMP

MODEL CODES:

72=2 DR Wagon
74=4 DR Wagon
77=Open Body 93" Whlbase
78=Open Body 103" Whlbase - Export
T=2WD
J,N=4WD
U=4WD (RHD)

BODY STYLES:

YJ=Wrangler (4X4) "S"
Weangler (4X4) SE
Wrangler (4X4) Sahara
Wrangler (4X4) Renegade

XJ=Cherokee SE
Cherokee Sport
Cherokee Country

ZJ=Grand Cherokee SE
Grand Cherokee Laredo
Grand Cherolee Limited
ZG=Grand Cherokee European

Y1=Wrangler
X1=Cherokee
Z1=Grand Cherokee
KDX=Vehicles

AR = Use as Required - = Non Illustrated Part P.A.R. = Paint as Required

« RETURN TO GROUP INDEX

TURBOCHARGER 2.5L DIESEL ENGINE XJ BODY
Figure 14-660

14-660

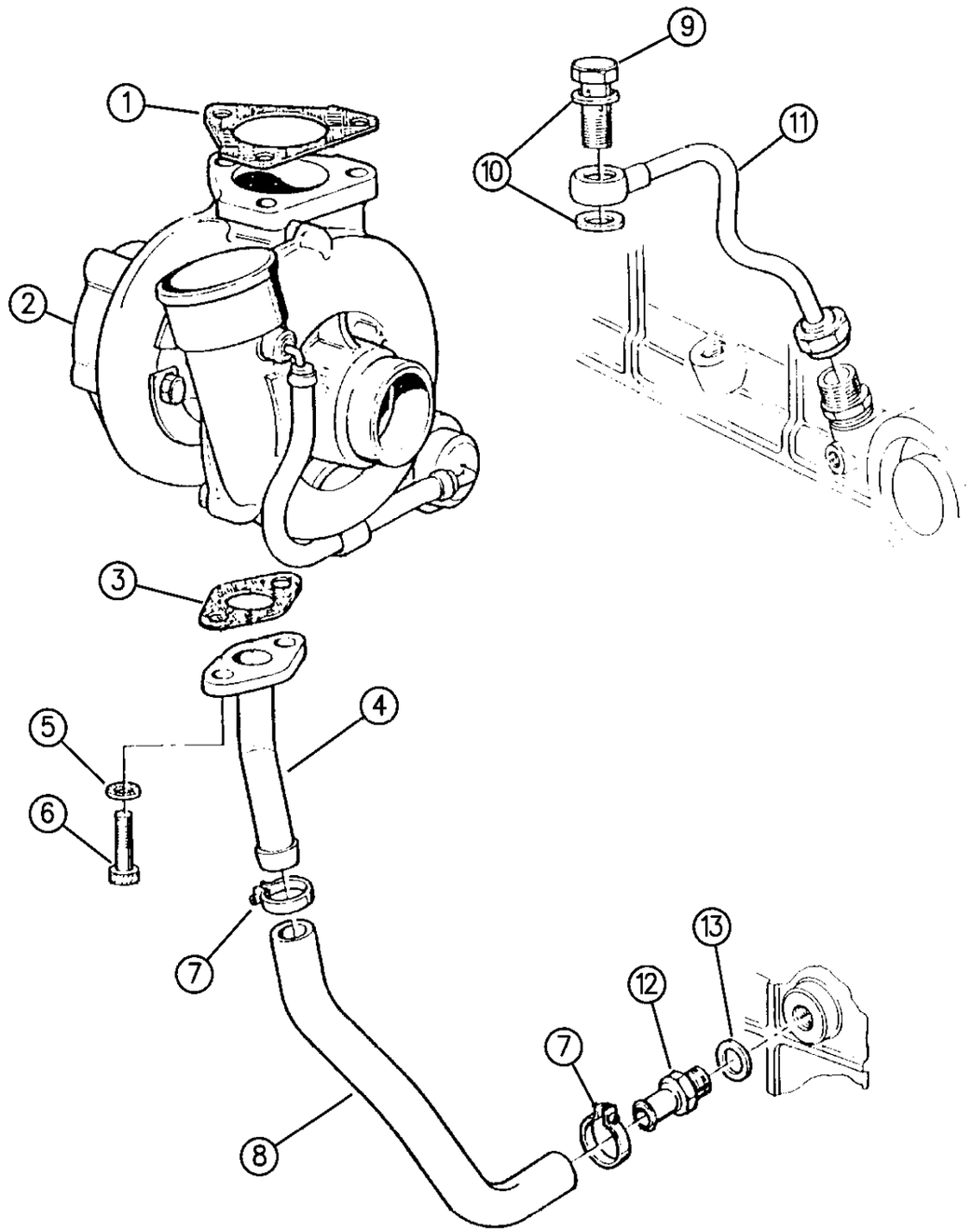

ITEM	PART NUMBER	QTY	BODY	MODEL	DESCRIPTION
1	4720 203	1			GASKET, Manifold to Turbo.
2					TURBOCHARGER ***
	4796 000	1			1994-95
	4864 756	1			1996
3	4796 007	1			WASHER
4	4796 008	1			PIPE, Upper Oil Return
5	4720 305	2			WASHER
6	4728 186	2			SCREW
7	4773 713	2			CLIP, Hose
8	4796 009	1			PIPE, Lower Oil Return
9	4720 367	1			BOLT
10	4720 703	2			WASHER
11	4796 400	1			PIPE, Oil Supply
12	4796 010	1			ADAPTOR, Hose
13	4797 784	1			WASHER

MODEL CODES:

72=2 DR Wagon
74=4 DR Wagon
77=Open Body 93" Whlbase
78=Open Body 103" Whlbase - Export
T=2WD
J,N=4WD
U=4WD (RHD)

BODY STYLES:

YJ=Wrangler (4X4) "S"
Weangler (4X4) SE
Wrangler (4X4) Sahara
Wrangler (4X4) Renegade

XJ=Cherokee SE
Cherokee Sport
Cherokee Country

ZJ=Grand Cherokee SE
Grand Cherokee Laredo
Grand Cherolee Limited
ZG=Grand Cherokee European

Y1=Wrangler
X1=Cherokee
Z1=Grand Cherokee
KDX=Vehicles

AR = Use as Required - = Non Illustrated Part P.A.R. = Paint as Required

« RETURN TO GROUP INDEX

TURBOCHARGER 2.5L DIESEL ENGINE ZG BODY
Figure 14-670

14-670

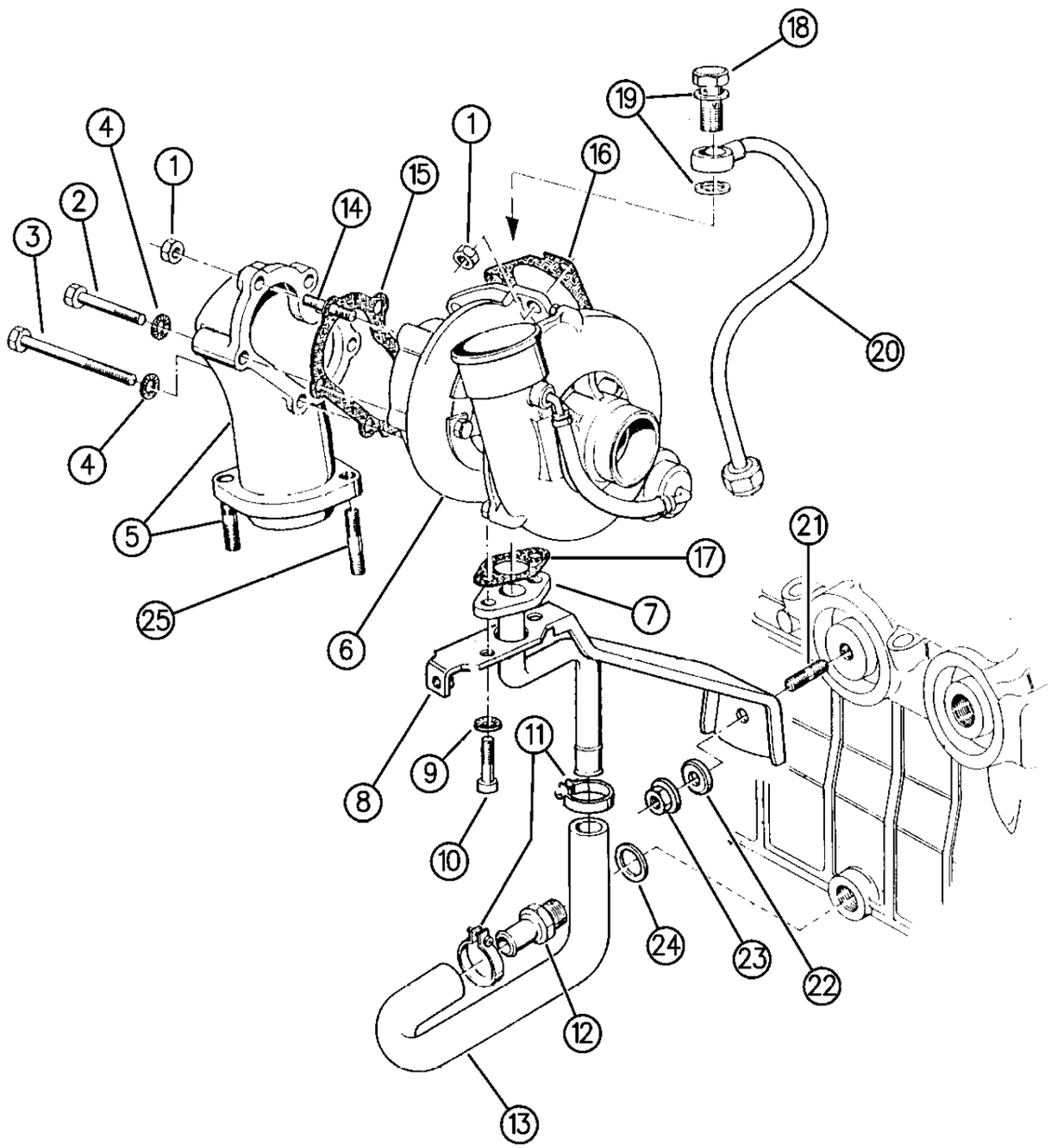

94J14 670

ITEM	PART NUMBER	QTY	BODY	MODEL	DESCRIPTION
1					NUT
	4720 428	6			1995
	4798 296	6			1996
2	4796 175	1			BOLT, (M8x60)
3	4796 178	1			BOLT, (M8x100)
4	4723 223	2			WASHER
5	4796 179	1			ELBOW, Exhaust Outlet Turbo Assy.
	4796 179	1			1995
	4864 592	1			1996
6					TURBOCHARGER ***
	4796 000	1			1995
	4864 593	1			1996
7	4796 181	1			PIPE, Turbo Oil Drain
8	4796 182	1			BRACKET, Turbo Support
9	4720 305	2			WASHER
10	4720 551	2			BOLT, (M6x18)
11	4773 713	2			CLAMP, Hose
12	4796 010	1			ADAPTOR, Hose
13					PIPE, Turbo Lower Oil Return
	4796 183	1			1995
	4864 595	1			1996
14	4741 777	3			STUD, (M8x22)
15	4796 184	1			GASKET, Turbo Exhaust Pipe
16	4720 203	1			GASKET, Manifold to Turbo
17	4796 007	1			WASHER, Turbo Oil Return Pipe
18	4720 367	1			BOLT, Banjo, (M12x1.5)
19	4720 703	2			WASHER
20	4796 406	1			PIPE, Turbo Oil Delivery
21		1			STUD, (Not Serviced)
22		1			WASHER, (Not Serviced)
23	4796 038	1			NUT, (M10)
24		1			WASHER, (Not Serviced)
25		2			STUD, (Not Serviced)

MODEL CODES:

72=2 DR Wagon
74=4 DR Wagon
77=Open Body 93" Whlbase
78=Open Body 103" Whlbase - Export
T=2WD
J,N=4WD
U=4WD (RHD)

BODY STYLES:

YJ=Wrangler (4X4) "S"
Weangler (4X4) SE
Wrangler (4X4) Sahara
Wrangler (4X4) Renegade

XJ=Cherokee SE
Cherokee Sport
Cherokee Country

ZJ=Grand Cherokee SE
Grand Cherokee Laredo
Grand Cherolee Limited
ZG=Grand Cherokee European

Y1=Wrangler
X1=Cherokee
Z1=Grand Cherokee
KDX=Vehicles

AR = Use as Required - = Non Illustrated Part P.A.R. = Paint as Required

THROTTLE CONTROLS YJ BODY
Figure 14-710

14-710

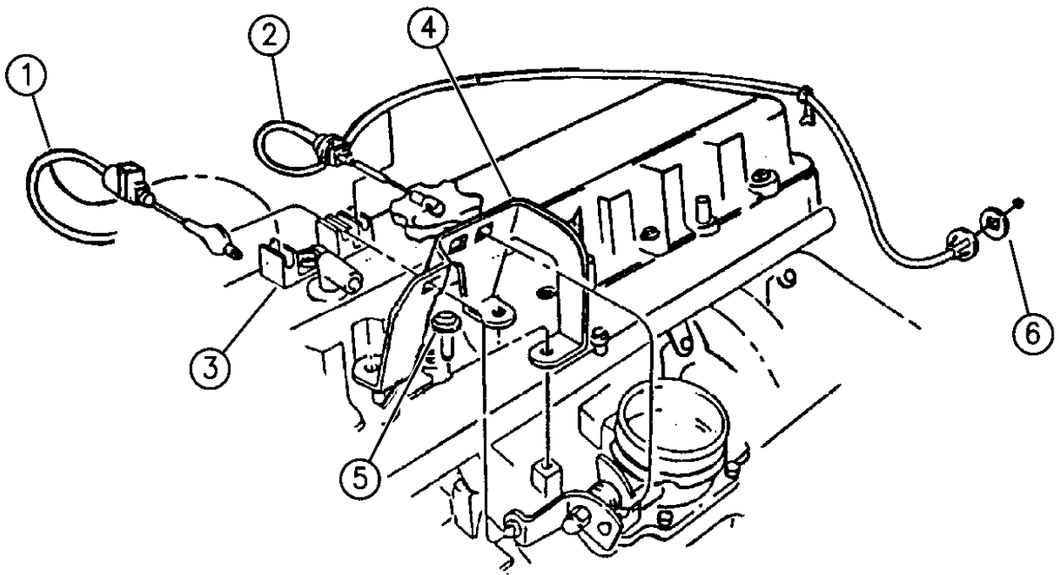

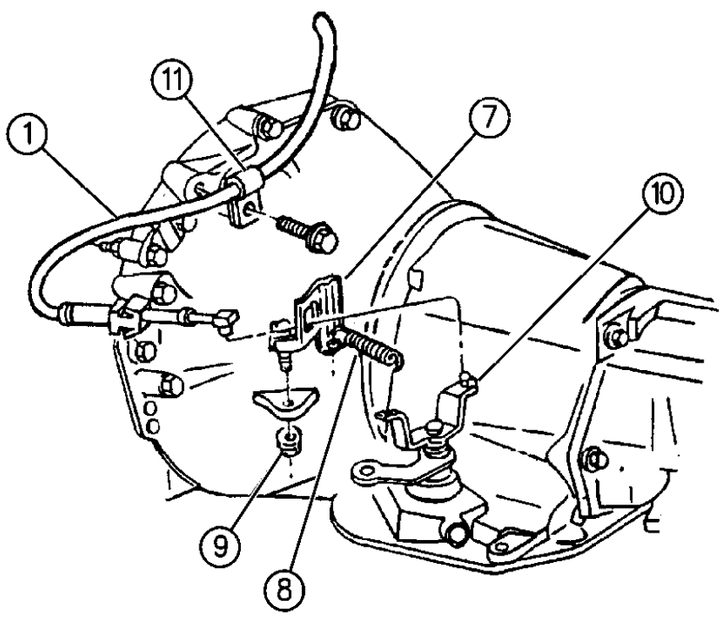

94J14 710

ITEM	PART NUMBER	QTY	BODY	MODEL	DESCRIPTION
1	5207 8171	1			CABLE, Throttle Valve, w/Auto Trans.
2	5300 6557	1			CABLE, Accelerator Control
3	5300 7620	1			GUIDE, Cable
4					BRACKET, Accelerator Cable
	5300 7485	1			2.5L Eng.
	5300 7486	1			4.0L Eng.
5	6501 979	AR			SCREW, w/Washer, (M6x1.00-17)
6	J319 4154	1			SEAL, Accelerator Control Cable
7	5300 7980	1			BRACKET, Throttle Valve, 4.0L Eng., w/Auto Trans.
8	5300 7985	1			SPRING, Throttle Valve Idle Return, w/Auto Trans.
9	J400 4005	1			NUT
10	5300 7983	1			LEVER, Trans.
11	5207 8465	1			CLIP, Cable Retention to Trans.

MODEL CODES:

72=2 DR Wagon
74=4 DR Wagon
77=Open Body 93" Whlbase
78=Open Body 103" Whlbase - Export
T=2WD
J,N=4WD
U=4WD (RHD)

BODY STYLES:

YJ=Wrangler (4X4) "S"
Weangler (4X4) SE
Wrangler (4X4) Sahara
Wrangler (4X4) Renegade

XJ=Cherokee SE
Cherokee Sport
Cherokee Country

ZJ=Grand Cherokee SE
Grand Cherokee Laredo
Grand Cherolee Limited
ZG=Grand Cherokee European

Y1=Wrangler
X1=Cherokee
Z1=Grand Cherokee
KDX=Vehicles

AR = Use as Required - = Non Illustrated Part P.A.R. = Paint as Required

THROTTLE CONTROLS XJ, ZJ, ZG BODY
Figure 14-720

14-720C

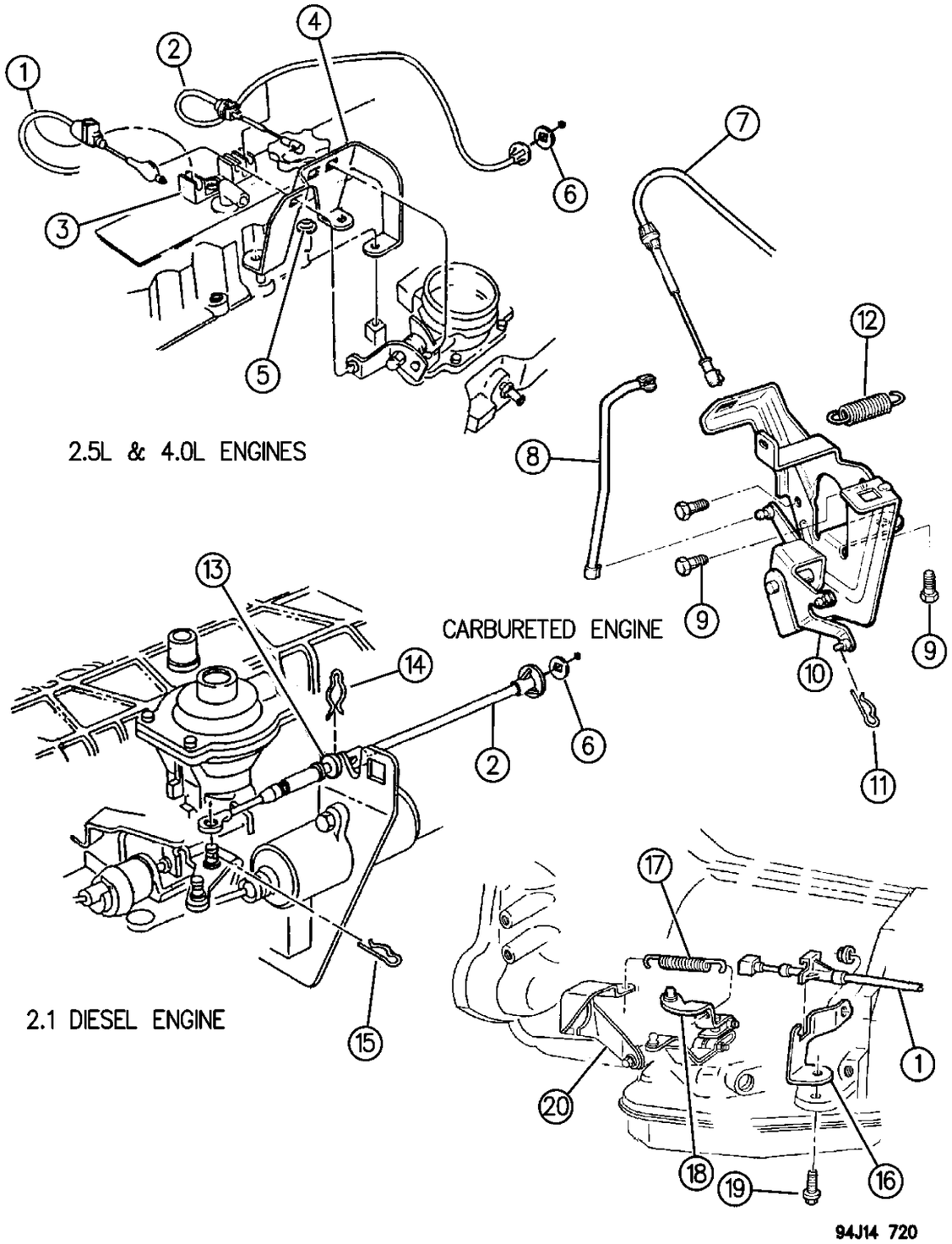

ITEM	PART NUMBER	QTY	BODY	MODEL	DESCRIPTION
1					CABLE, Throttle
	5207 8171	1			2.5L Eng.
					4.0L Eng.
	5207 7578	1		XJ	
	5207 8672	1		ZJ	
	5207 9204	1			5.2L Eng.
2					CABLE, Accelerator Control
					2.5L Eng.
	5207 9383	1			1994-95
	5207 9504	1			1996
	5207 9329	1			1994-95, RHD
	4854 087	1			1996, RHD
					4.0L Eng.
	5207 9383	1		XJ	1994-95
	5207 9504	1		XJ	1996
	5207 9381	1		ZJ	
	5305 4124	1		ZG	RHD
	5207 9383	1			KDX, China, Venezuela
	5207 9327	1			1994-95, RHD
	4854 096	1			1996, RHD
					5.2L Eng.
	5207 8800	1			1994-95
	5303 2349	1			1996
					Diesel
	5300 5247	1			1994
	5207 9367	1			1995-96
3					GUIDE, Cable Assembly
	5300 7620	1			1994-95
	5300 7620	1		XJ	1996, 2.5L
	5207 9029	1		XJ,ZJ	1996, 4.0L
4					BRACKET, Accelerator Cable
	5300 7485	1			2.5L Eng.
	5300 7486	1			4.0L Eng.
		1			5.2L Eng., (Serviced in Throttle Body)
5	6501 979	AR			SCREW, w/Washer, (M6x1.00-17)
6	J319 4154	1			SEAL, Accelerator Control Cable
7	5300 5246	1			CABLE, Accelerator Control, 2.5L Carbureted Eng., KDX, China
8	3300 1068	1			LINK, Bellcrank to Carb. Lever, 2.5L Carbureted Eng., KDX, China
9		3			SCREW, (Not Serviced)
10	3300 1065	1			BELLCRANK, 2.5L Carbureted Eng., KDX, China
11	J400 5758	1			CLIP, 2.5L Carbureted Eng., KDX, China

MODEL CODES:

72=2 DR Wagon
74=4 DR Wagon
77=Open Body 93" Whlbase
78=Open Body 103" Whlbase - Export
T=2WD
J,N=4WD
U=4WD (RHD)

BODY STYLES:

YJ=Wrangler (4X4) "S"
Weangler (4X4) SE
Wrangler (4X4) Sahara
Wrangler (4X4) Renegade
XJ=Cherokee SE
Cherokee Sport
Cherokee Country
ZJ=Grand Cherokee SE
Grand Cherokee Laredo
Grand Cherolee Limited
ZG=Grand Cherokee European
Y1=Wrangler
X1=Cherokee
Z1=Grand Cherokee
KDX=Vehicles

AR = Use as Required - = Non Illustrated Part P.A.R. = Paint as Required

THROTTLE CONTROLS XJ, ZJ, ZG BODY
Figure 14-720

14-720C

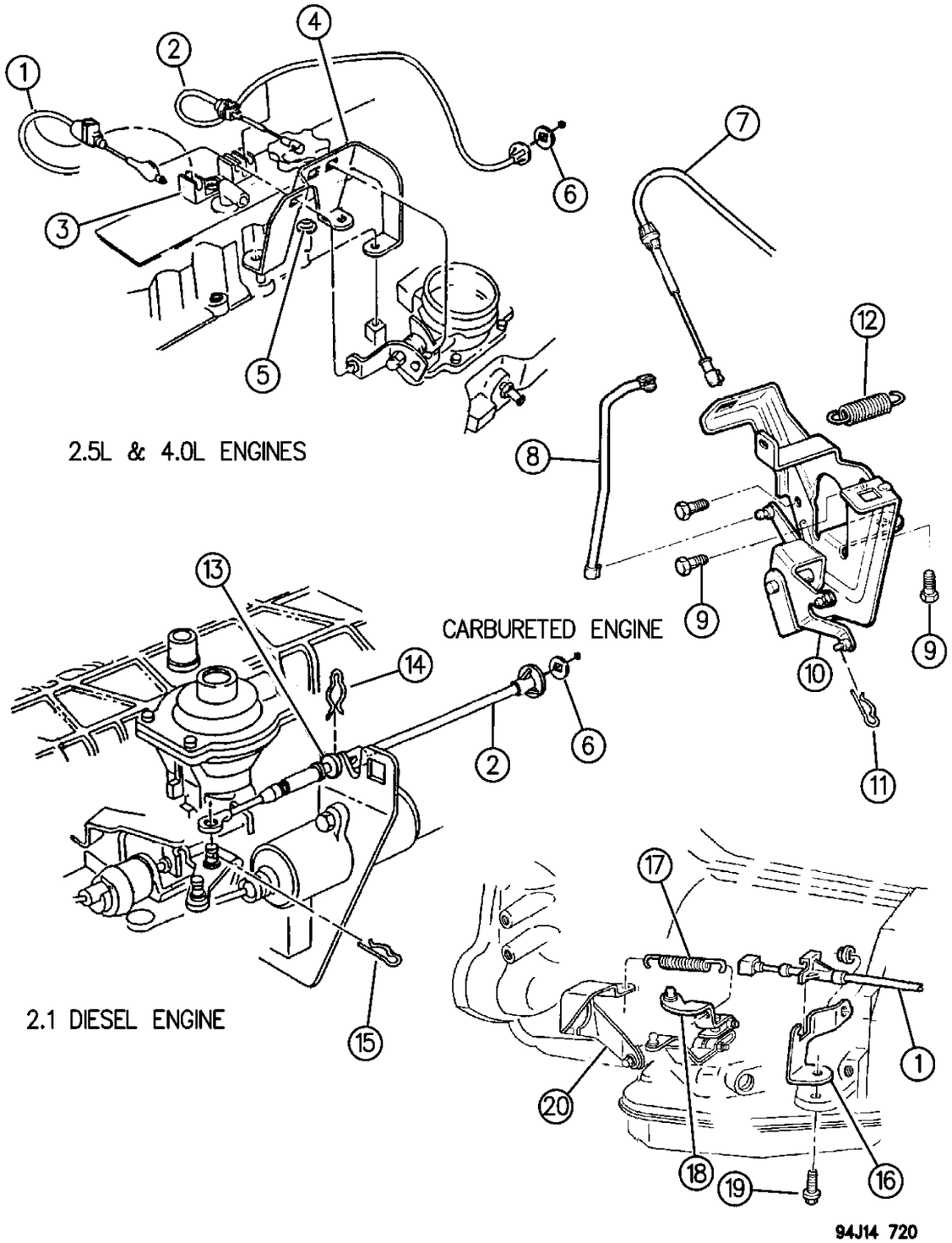

ITEM	PART NUMBER	QTY	BODY	MODEL	DESCRIPTION
12	3300 1069	1			SPRING, Carburetor Pullback, 2.5L Carbureted Eng., KDX, China
13	5300 1952	1			GROMMET, Cable Insulator
14	5207 8418	1			CLIP
15	J400 5122	1			PIN
16					BRACKET, Throttle Valve Cable
	5207 8258	1		ZJ	4.0L Eng.
	5207 9101	1		ZJ	5.2L Eng.
17	5300 9055	1		ZJ	SPRING
18					LEVER
	5207 8723	1		ZJ	4.0L Eng.
	5207 8264	1		ZJ	5.2L Eng.
19	6022 250	1		ZJ	SCREW
20					BRACKET, Cable Mounting
	5207 8255	1		XJ	
	5207 8875	1		ZJ	
-	4592 020	1			CLIP, Throttle Cable

MODEL CODES:

72=2 DR Wagon
74=4 DR Wagon
77=Open Body 93" Whlbase
78=Open Body 103" Whlbase - Export
T=2WD
J,N=4WD
U=4WD (RHD)

BODY STYLES:

YJ=Wrangler (4X4) "S"
Weangler (4X4) SE
Wrangler (4X4) Sahara
Wrangler (4X4) Renegade

XJ=Cherokee SE
Cherokee Sport
Cherokee Country

ZJ=Grand Cherokee SE
Grand Cherokee Laredo
Grand Cherolee Limited
ZG=Grand Cherokee European

Y1=Wrangler
X1=Cherokee
Z1=Grand Cherokee
KDX=Vehicles

AR = Use as Required - = Non Illustrated Part P.A.R. = Paint as Required

THROTTLE CONTROLS 2.5L DIESEL ENGINE XJ BODY
Figure 14-725

14-725

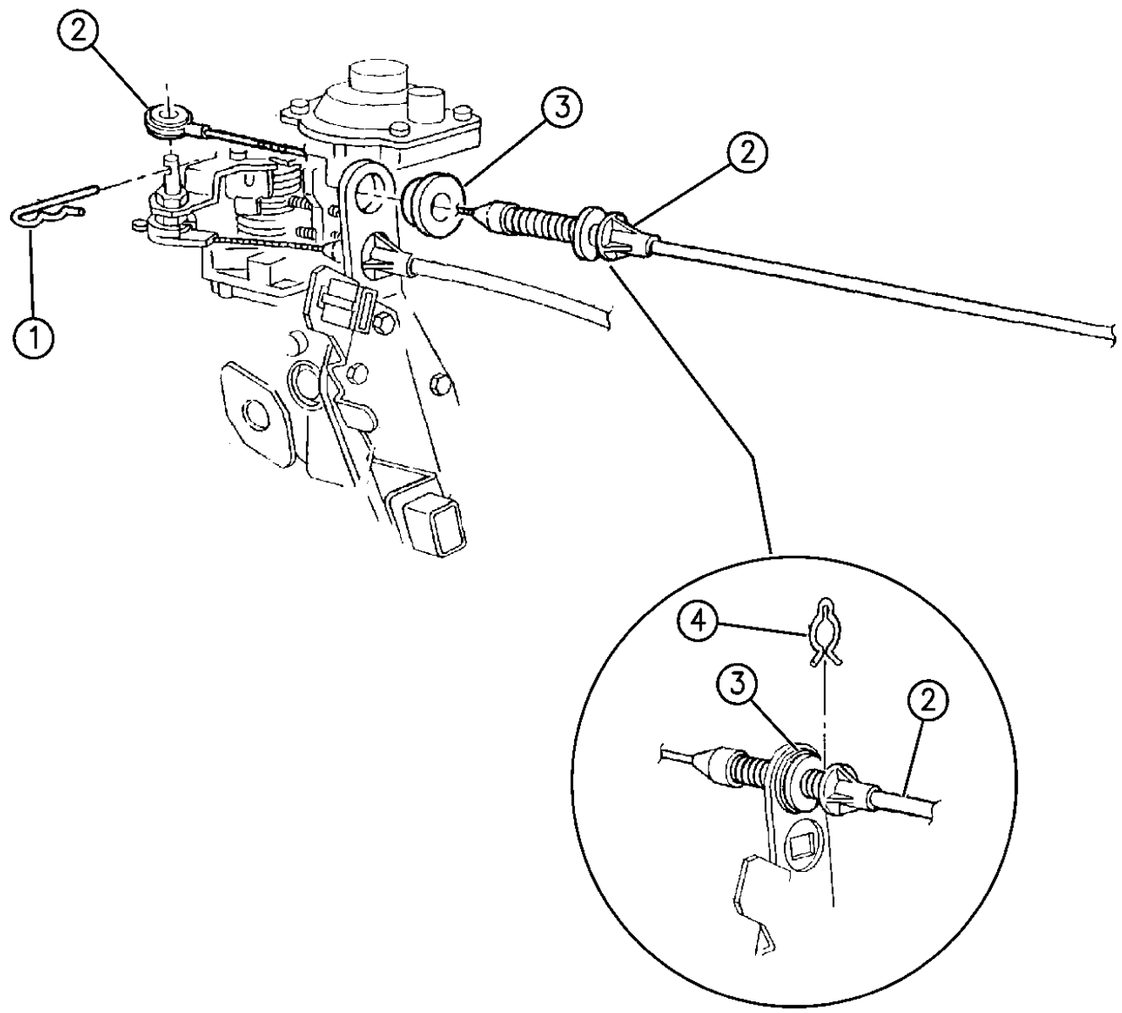

94J14 725

ITEM	PART NUMBER	QTY	BODY	MODEL	DESCRIPTION
1		1			PIN, Accelerator Cable Mounting, (Not Serviced)
2					CABLE, Accelerator
	5207 9367	1			
	4854 116	1			RHD
3	5300 1952	1			GROMMET, Cable
4	J306 6295	1			CLIP

MODEL CODES:

72=2 DR Wagon
74=4 DR Wagon
77=Open Body 93" Whlbase
78=Open Body 103" Whlbase - Export
T=2WD
J,N=4WD
U=4WD (RHD)

BODY STYLES:

YJ=Wrangler (4X4) "S"
Weangler (4X4) SE
Wrangler (4X4) Sahara
Wrangler (4X4) Renegade
XJ=Cherokee SE
Cherokee Sport
Cherokee Country
ZJ=Grand Cherokee SE
Grand Cherokee Laredo
Grand Cherolee Limited
ZG=Grand Cherokee European
Y1=Wrangler
X1=Cherokee
Z1=Grand Cherokee
KDX=Vehicles

AR = Use as Required - = Non Illustrated Part P.A.R. = Paint as Required

« RETURN TO GROUP INDEX

THROTTLE CONTROLS 2.5L DIESEL ENGINE ZG BODY
Figure 14-730

H14–730

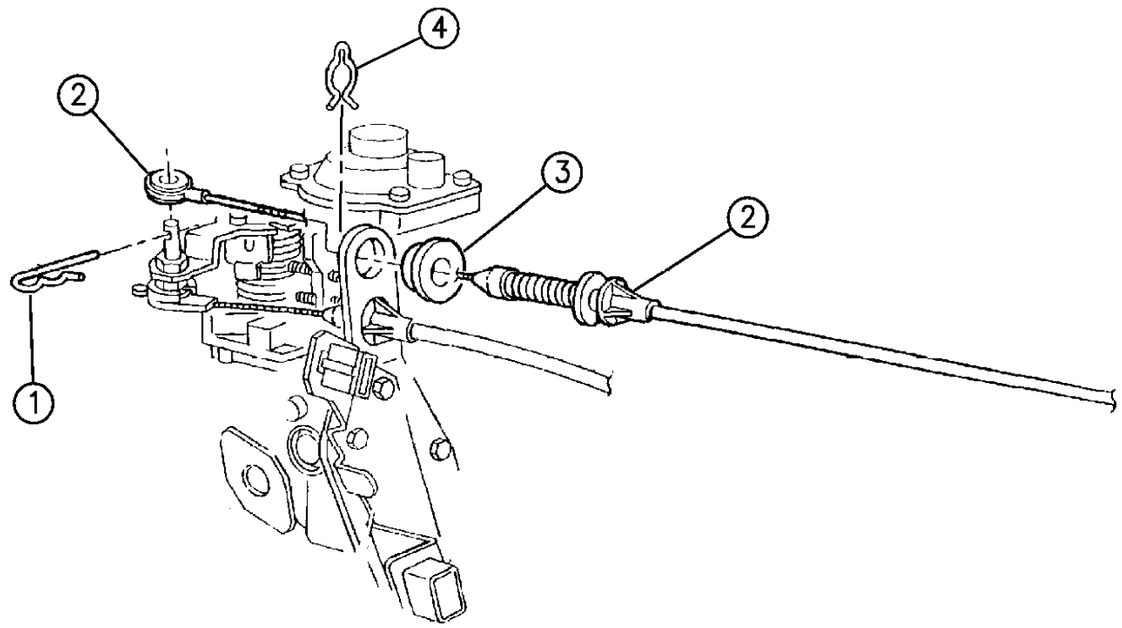

ITEM	PART NUMBER	QTY	BODY	MODEL	DESCRIPTION
1		1			PIN, Accelerator Cable Mtg., (Not Serviced)
2	5207 9367	1			CABLE, Accelerator
3	5300 1952	1			GROMMET, Cable
4	J306 6295	1			CLIP

MODEL CODES:

72=2 DR Wagon
74=4 DR Wagon
77=Open Body 93" Whlbase
78=Open Body 103" Whlbase - Export
T=2WD
J,N=4WD
U=4WD (RHD)

BODY STYLES:

YJ=Wrangler (4X4) "S"
Weangler (4X4) SE
Wrangler (4X4) Sahara
Wrangler (4X4) Renegade

XJ=Cherokee SE
Cherokee Sport
Cherokee Country

ZJ=Grand Cherokee SE
Grand Cherokee Laredo
Grand Cherolee Limited
ZG=Grand Cherokee European

Y1=Wrangler
X1=Cherokee
Z1=Grand Cherokee
KDX=Vehicles

AR = Use as Required - = Non Illustrated Part P.A.R. = Paint as Required

AIR CLEANER YJ BODY
Figure 14-810

14-810A

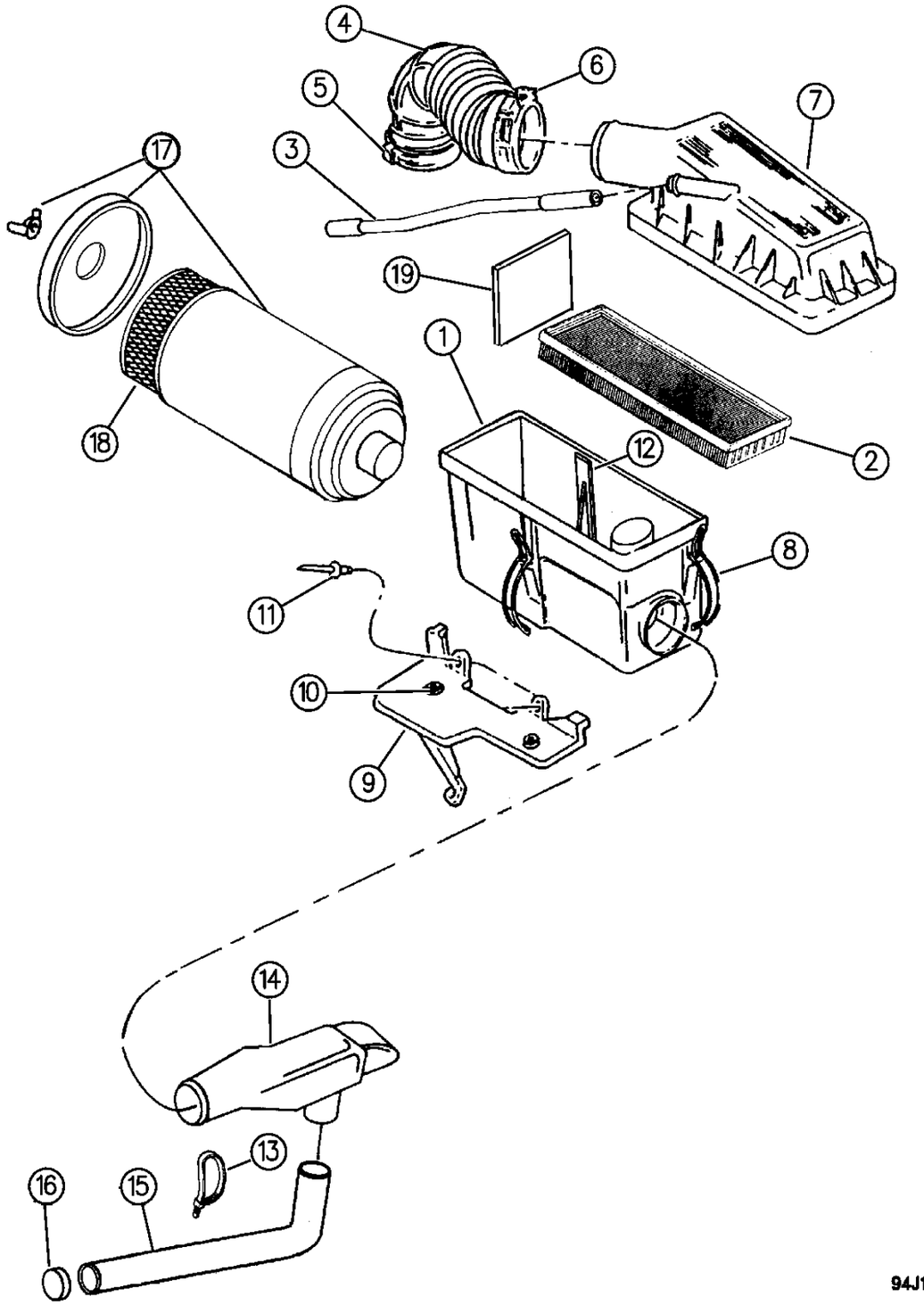

94J14 810

ITEM	PART NUMBER	QTY	BODY	MODEL	DESCRIPTION
1					SHELL, Air Cleaner, Lower
	5300 6315	1			2.5L/4.0L/KDX Eng.
	5303 0301	1			2.5L Eng., EUROPE
2	5300 6317	1			ELEMENT, Air Cleaner
3					TUBE, Crankcase Valve to Air Cleaner
	5300 6236	1			2.5L Eng.
	5300 6237	1			4.0L Eng.
4					HOSE
	5300 6288	1			2.5L Eng.
	5300 6289	1			4.0L Eng.
5	5300 6273	1			CLAMP
6	5300 8274	1			CLAMP
7	5300 6316	1			COVER, Air Cleaner
8	3300 4596	3			CLAMP
9	5300 8842	1			BRACKET, Mounting
10	3300 3025	2			GROMMET, Mounting Bracket
11	3420 1597	3			RIVET
12	5303 0201	1			BRACE, 2.5L Eng., EUROPE
13	6016 155	2			STRAP, Tie
14					ADAPTER, Baffle Resonator
	5300 6287	1			2.5L/4.0L Eng.
	5303 0202	1			2.5L Eng., EUROPE
15	5300 5327	1			HOSE, Resonator, 2.5L Eng., EUROPE
16	3300 4032	1			PLUG, Resonator, 2.5L Eng., EUROPE
17	5300 3675	1			AIR CLEANER, KDX, EGYPT
18	5300 3676	1			ELEMENT, Air Cleaner, KDX, EGYPT
19	4773 899	1			INSERT, Noise

MODEL CODES:

72=2 DR Wagon
74=4 DR Wagon
77=Open Body 93" Whlbase
78=Open Body 103" Whlbase - Export
T=2WD
J,N=4WD
U=4WD (RHD)

BODY STYLES:

YJ=Wrangler (4X4) "S"
Weangler (4X4) SE
Wrangler (4X4) Sahara
Wrangler (4X4) Renegade
XJ=Cherokee SE
Cherokee Sport
Cherokee Country
ZJ=Grand Cherokee SE
Grand Cherokee Laredo
Grand Cherolee Limited
ZG=Grand Cherokee European
Y1=Wrangler
X1=Cherokee
Z1=Grand Cherokee
KDX=Vehicles

AR = Use as Required - = Non Illustrated Part P.A.R. = Paint as Required

« RETURN TO GROUP INDEX

AIR CLEANER 2.5L, 4.0L ENGINE XJ BODY
Figure 14-820

14-820A

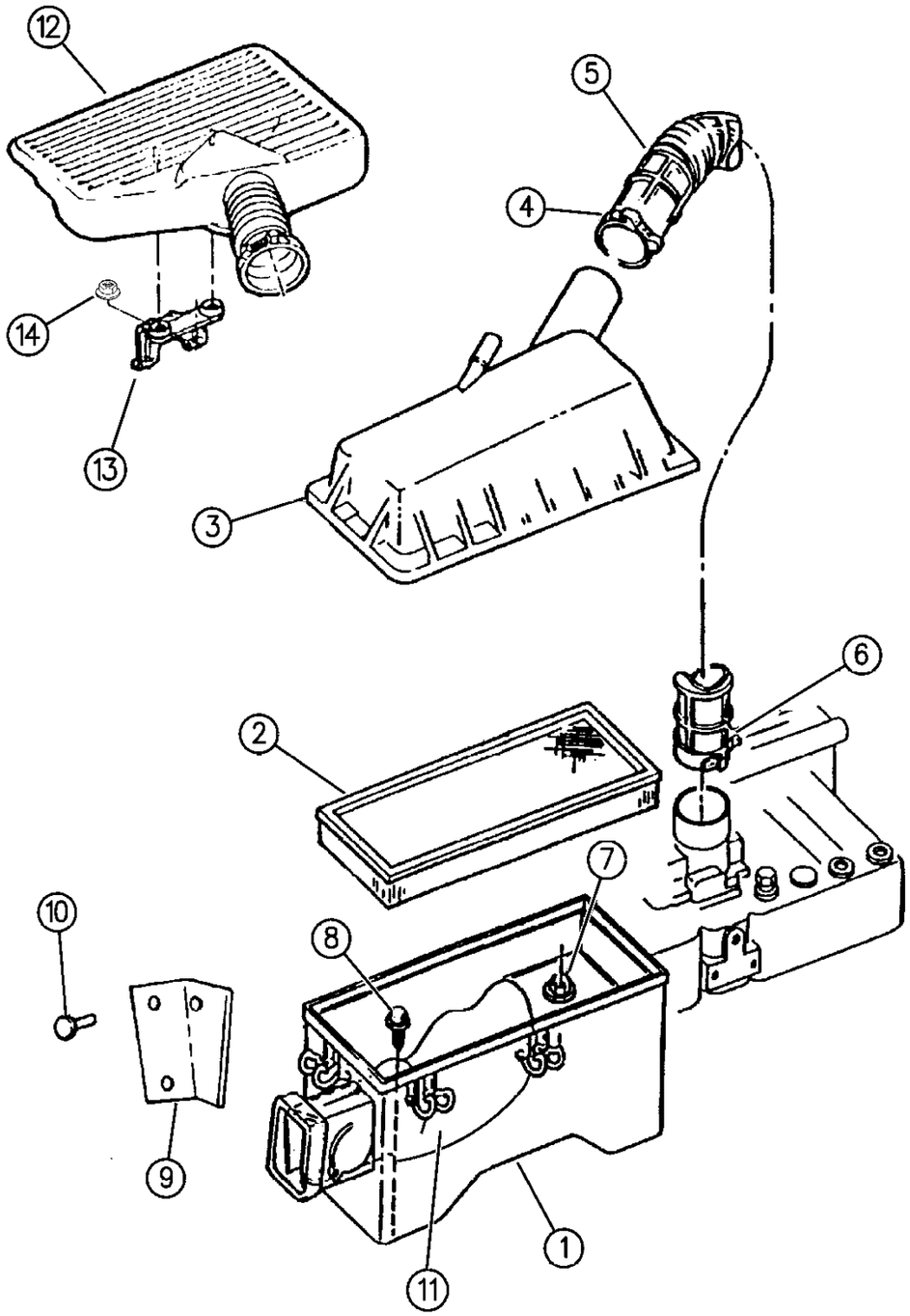

ITEM	PART NUMBER	QTY	BODY	MODEL	DESCRIPTION
1					SHELL, Air Cleaner, Lower
	5303 0668	1			1994-95
	5303 0737	1			1996
2	5300 4383	1			FILTER, Air Cleaner
3					COVER, Air Cleaner
	5303 0296	1			1994-95
	5303 0707	1			1996
4	5300 6584	1			CLAMP
5					HOSE, Air Cleaner
	5300 6272	1			2.5L Eng.
	5300 6275	1			4.0L Eng.
6	5300 6273	1			CLAMP
7	3420 1416	1			NUT
8		2			SCREW, (Not Serviced)
9	5300 8526	1			BAFFLE, Ambient Air
10	6033 018	2			FASTENER
11					INSERT ASSEMBLY, Noise Control ***
	5300 6309	1			Up To 4-22-94
	5303 0739	1			After 4-22-94
12	5303 0797	1			RESONATOR, Air Induction, EUROPE
13	5303 0796	1			BRACKET, Resonator, EUROPE
14	6033 560	2			NUT, w/Washer, Resonator Mounting, EUROPE

MODEL CODES:

72=2 DR Wagon
74=4 DR Wagon
77=Open Body 93" Whlbase
78=Open Body 103" Whlbase - Export
T=2WD
J,N=4WD
U=4WD (RHD)

BODY STYLES:

YJ=Wrangler (4X4) "S"
Weangler (4X4) SE
Wrangler (4X4) Sahara
Wrangler (4X4) Renegade
XJ=Cherokee SE
Cherokee Sport
Cherokee Country
ZJ=Grand Cherokee SE
Grand Cherokee Laredo
Grand Cherolee Limited
ZG=Grand Cherokee European
Y1=Wrangler
X1=Cherokee
Z1=Grand Cherokee
KDX=Vehicles

AR = Use as Required - = Non Illustrated Part P.A.R. = Paint as Required

« RETURN TO GROUP INDEX

AIR CLEANER 2.1L DIESEL ENGINE XJ BODY
Figure 14-830

14–830

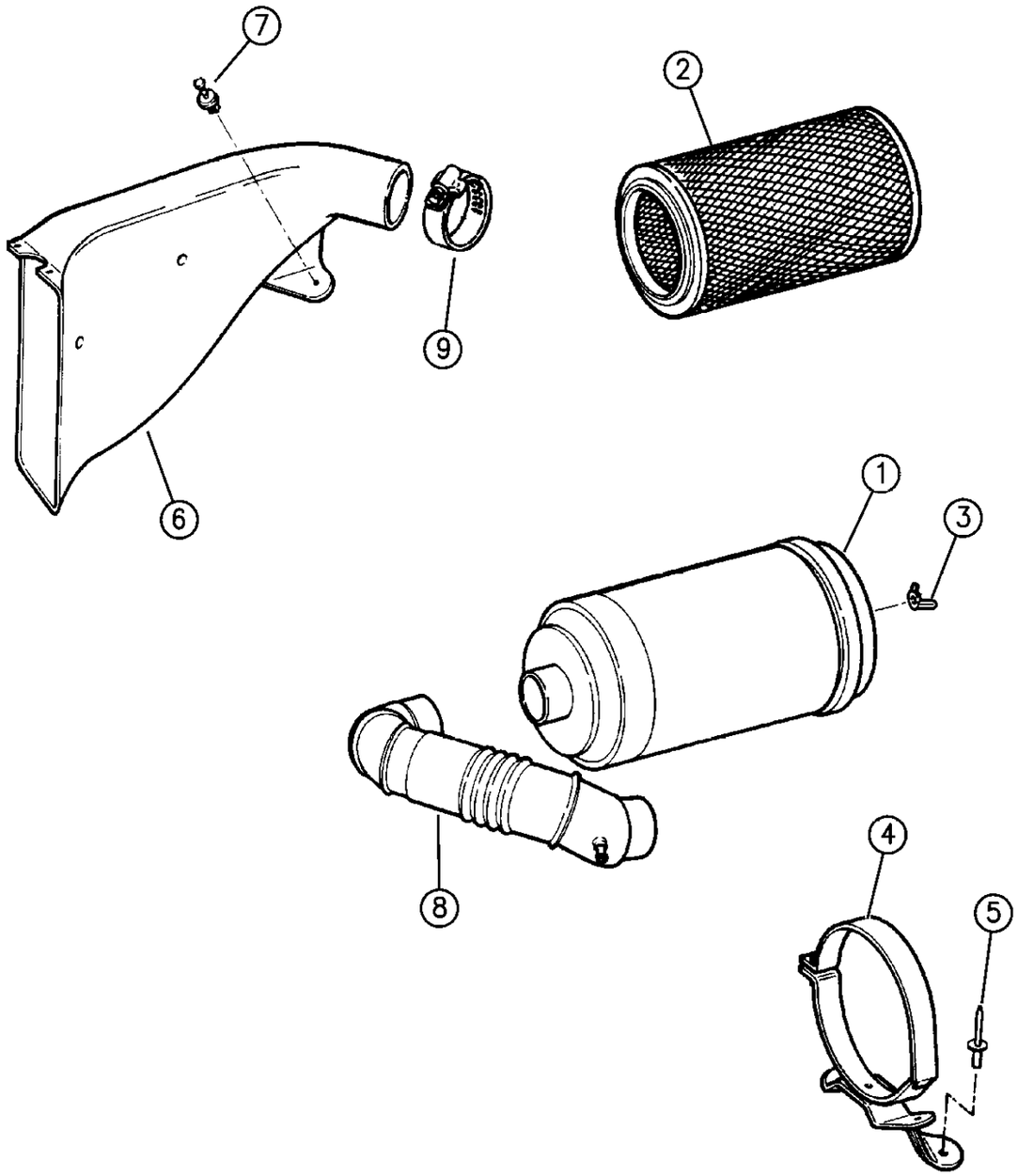

ITEM	PART NUMBER	QTY	BODY	MODEL	DESCRIPTION
1	5300 1125	1			AIR CLEANER
2	8350 1843	1			ELEMENT, Air Cleaner
3	3300 1796	1			NUT, Wing
4	3300 2197	1			BRACKET, Air Cleaner
5	3420 1597	3			RIVET
6	5300 4536	1			DUCT, Fresh Air Intake
7	3420 1621	AR			RIVET
8	3300 2199	1			TUBE, Turbo Inlet
9	J320 3078	3			CLAMP, Hose

MODEL CODES:

72=2 DR Wagon
74=4 DR Wagon
77=Open Body 93" Whlbase
78=Open Body 103" Whlbase - Export
T=2WD
J,N=4WD
U=4WD (RHD)

BODY STYLES:

YJ=Wrangler (4X4) "S"
Weangler (4X4) SE
Wrangler (4X4) Sahara
Wrangler (4X4) Renegade

XJ=Cherokee SE
Cherokee Sport
Cherokee Country

ZJ=Grand Cherokee SE
Grand Cherokee Laredo
Grand Cherolee Limited
ZG=Grand Cherokee European

Y1=Wrangler
X1=Cherokee
Z1=Grand Cherokee
KDX=Vehicles

AR = Use as Required - = Non Illustrated Part P.A.R. = Paint as Required

« RETURN TO GROUP INDEX

AIR CLEANER 2.5L DIESEL ENGINE XJ BODY
Figure 14-835

14-835A

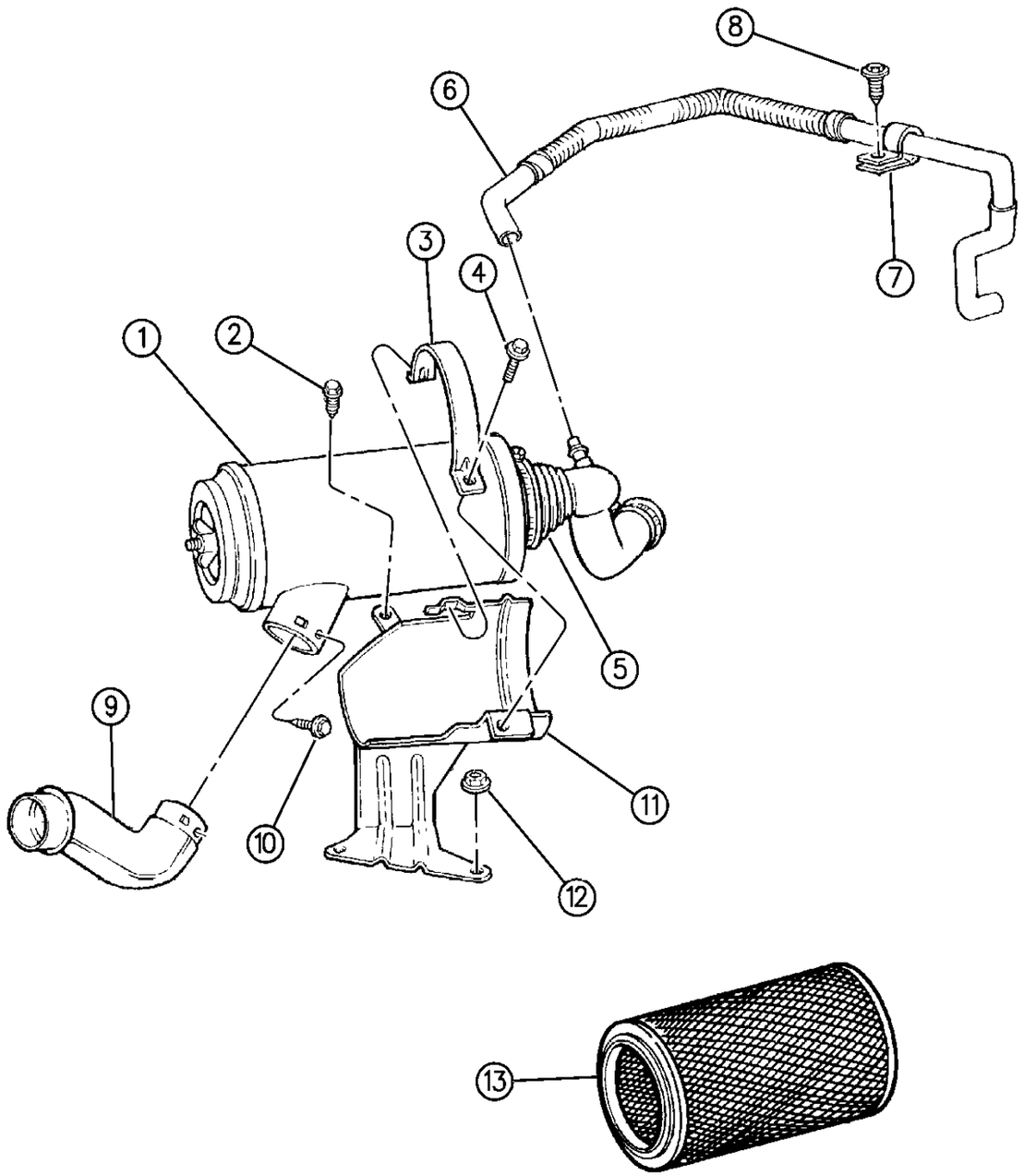

94J14 835

ITEM	PART NUMBER	QTY	BODY	MODEL	DESCRIPTION
1	5303 0706	1			AIR CLEANER
2	0154 554	1			SCREW
3	5303 0689	1			STRAP, Cleaner Mtg.
4		1			SCREW, (Not Serviced)
5	5303 0547	1			HOSE, Air
6					TUBE, Oil Separator to Air Cleaner
	5303 0516	1			LHD
	5303 0785	1			RHD
7		1			CLAMP, (Not Serviced)
8		1			SCREW, (Not Serviced)
9	5303 0612	1			DUCT, Ambient Air
10	6032 196	1			SCREW
11	5303 0417	1			BRACKET, Cleaner
12		2			NUT, (Not Serviced)
13	8350 1843	1			FILTER, Cleaner

MODEL CODES:

72=2 DR Wagon
74=4 DR Wagon
77=Open Body 93" Whlbase
78=Open Body 103" Whlbase - Export
T=2WD
J,N=4WD
U=4WD (RHD)

BODY STYLES:

YJ=Wrangler (4X4) "S"
Weangler (4X4) SE
Wrangler (4X4) Sahara
Wrangler (4X4) Renegade

XJ=Cherokee SE
Cherokee Sport
Cherokee Country

ZJ=Grand Cherokee SE
Grand Cherokee Laredo
Grand Cherolee Limited
ZG=Grand Cherokee European

Y1=Wrangler
X1=Cherokee
Z1=Grand Cherokee
KDX=Vehicles

AR = Use as Required - = Non Illustrated Part P.A.R. = Paint as Required

« RETURN TO GROUP INDEX

AIR CLEANER 2.5L CARBURETED ENGINE X1 BODY
Figure 14-840

14-840

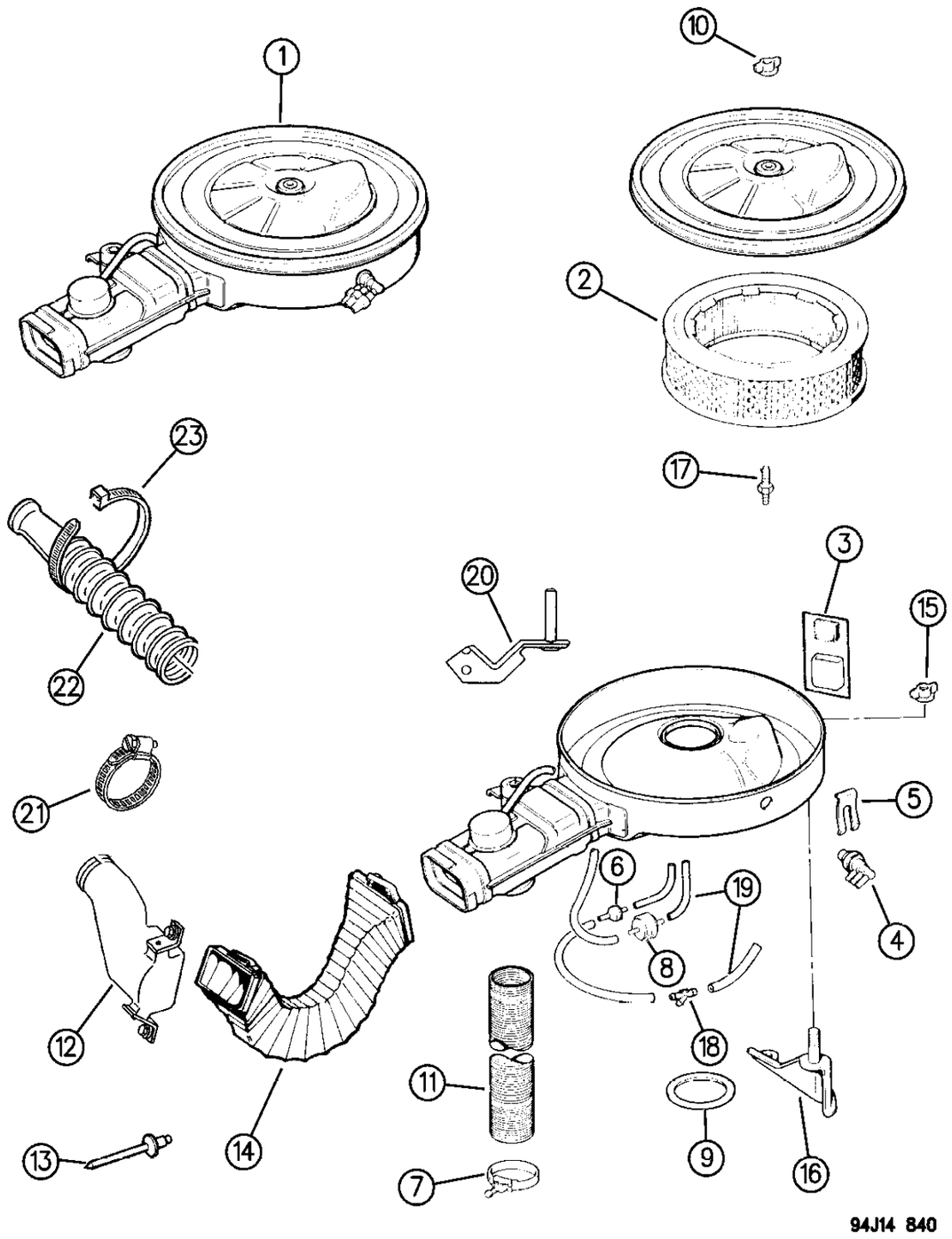

ITEM	PART NUMBER	QTY	BODY	MODEL	DESCRIPTION
1	5300 1837	1			AIR CLEANER
2	5303 0275	1			ELEMENT, Air Cleaner
3	J323 6695	1			PACKAGE, Filter
4	J323 7457	1			SWITCH, Thermal Vacuum
5	J400 6571	1			CLIP
6	J322 8426	1			VALVE, Check
7	6502 091	2			CLAMP, Hose
8	J323 5938	1			VALVE, Reverse Delay, (Gray)
9	3300 1475	1			GASKET, Air Cleaner
10	3420 1676	1			NUT
11	3300 3391	1			TUBE, Hot Air
12	5303 0357	1			ADAPTER, Air Duct
13	3420 2099	2			RIVET
14	5300 5144	1			TUBE, Air Intake
15	3420 1918	1			NUT
16	3300 1611	1			BRACKET, Air Cleaner Mtg.
17	5300 0683	1			STUD
18	8310 0020	1			CONNECTOR
19	J812 5812	AR			HOSE
20	5303 0192	1			BRACKET, Air Cleaner Snorkel Support
21	6502 092	1			CLAMP
22	5303 0359	1			HOSE, Ambient Air Inlet
23	6016 155	1			STRAP, Tie
	4638 414	1			PACKAGE, Clean Air Hose

MODEL CODES:

72=2 DR Wagon
74=4 DR Wagon
77=Open Body 93" Whlbase
78=Open Body 103" Whlbase - Export
T=2WD
J,N=4WD
U=4WD (RHD)

BODY STYLES:

YJ=Wrangler (4X4) "S"
Weangler (4X4) SE
Wrangler (4X4) Sahara
Wrangler (4X4) Renegade

XJ=Cherokee SE
Cherokee Sport
Cherokee Country

ZJ=Grand Cherokee SE
Grand Cherokee Laredo
Grand Cherolee Limited
ZG=Grand Cherokee European

Y1=Wrangler
X1=Cherokee
Z1=Grand Cherokee
KDX=Vehicles

AR = Use as Required - = Non Illustrated Part P.A.R. = Paint as Required

« RETURN TO GROUP INDEX

AIR CLEANER ZJ BODY
Figure 14-850

14-850A

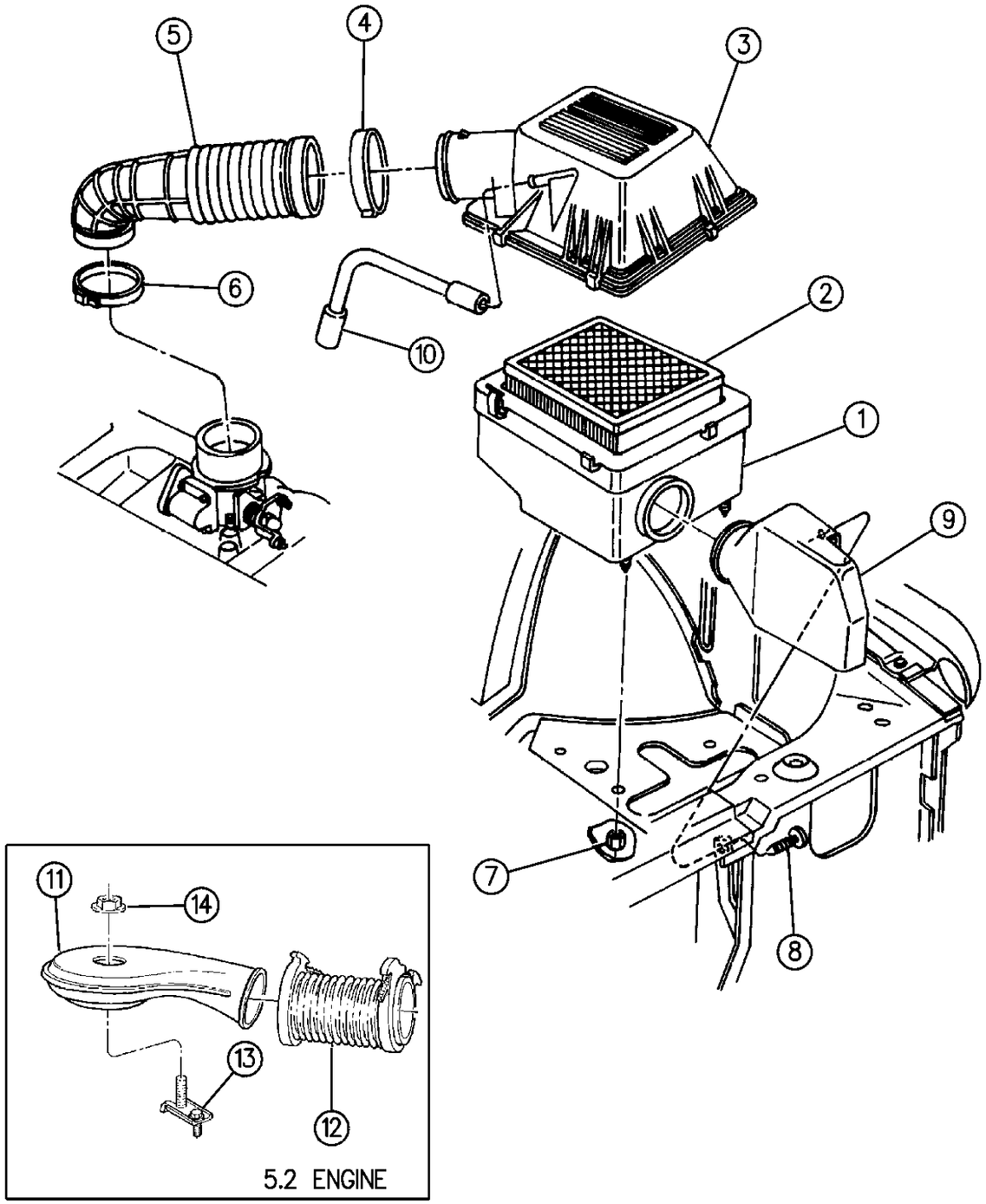

ITEM	PART NUMBER	QTY	BODY	MODEL	DESCRIPTION
1	5300 7385	1			SHELL, Air Cleaner, Lower
2	5300 7386	1			FILTER, Air Cleaner
3					COVER, Air Cleaner
					1994
	5300 7387	1			4.0L Eng.
	5303 0178	1			5.2L Eng.
					1995
	5300 7387	1			4.0L Eng., Federal
	5303 0178	1			4.0L Eng., Calif.
	5303 0178	1			5.2L Eng.
					1996
	5303 0178	1			4.0L Eng.
	5303 0178	1			5.2L Eng.
4	5300 6584	1			CLAMP
5	5300 7571	1			HOSE, Air Cleaner
6	5300 6273	1			CLAMP
7					NUT, (Not Serviced)
8	6030 441	1			FASTENER
9	5300 7447	1			DUCT, Ambient Air Inlet
10					TUBE, Crankcase Vent Valve To Air Cleaner, 4.0L Eng.
	5300 7422	1			1994-95
	5303 2031	1			1996
11	5300 9266	1			BONNET ***
12	5300 9268	1			HOSE
13					BRACKET, w/Screw
	5303 0179	1			1994
	5303 0693	1			1995-96
14	5300 9267	1			NUT, Bonnet

MODEL CODES:

72=2 DR Wagon
74=4 DR Wagon
77=Open Body 93" Whlbase
78=Open Body 103" Whlbase - Export
T=2WD
J,N=4WD
U=4WD (RHD)

BODY STYLES:

YJ=Wrangler (4X4) "S"
Weangler (4X4) SE
Wrangler (4X4) Sahara
Wrangler (4X4) Renegade
XJ=Cherokee SE
Cherokee Sport
Cherokee Country
ZJ=Grand Cherokee SE
Grand Cherokee Laredo
Grand Cherolee Limited
ZG=Grand Cherokee European
Y1=Wrangler
X1=Cherokee
Z1=Grand Cherokee
KDX=Vehicles

AR = Use as Required - = Non Illustrated Part P.A.R. = Paint as Required

« RETURN TO GROUP INDEX

AIR CLEANER 2.5L DIESEL ENGINE ZG BODY
Figure 14-865

14-865

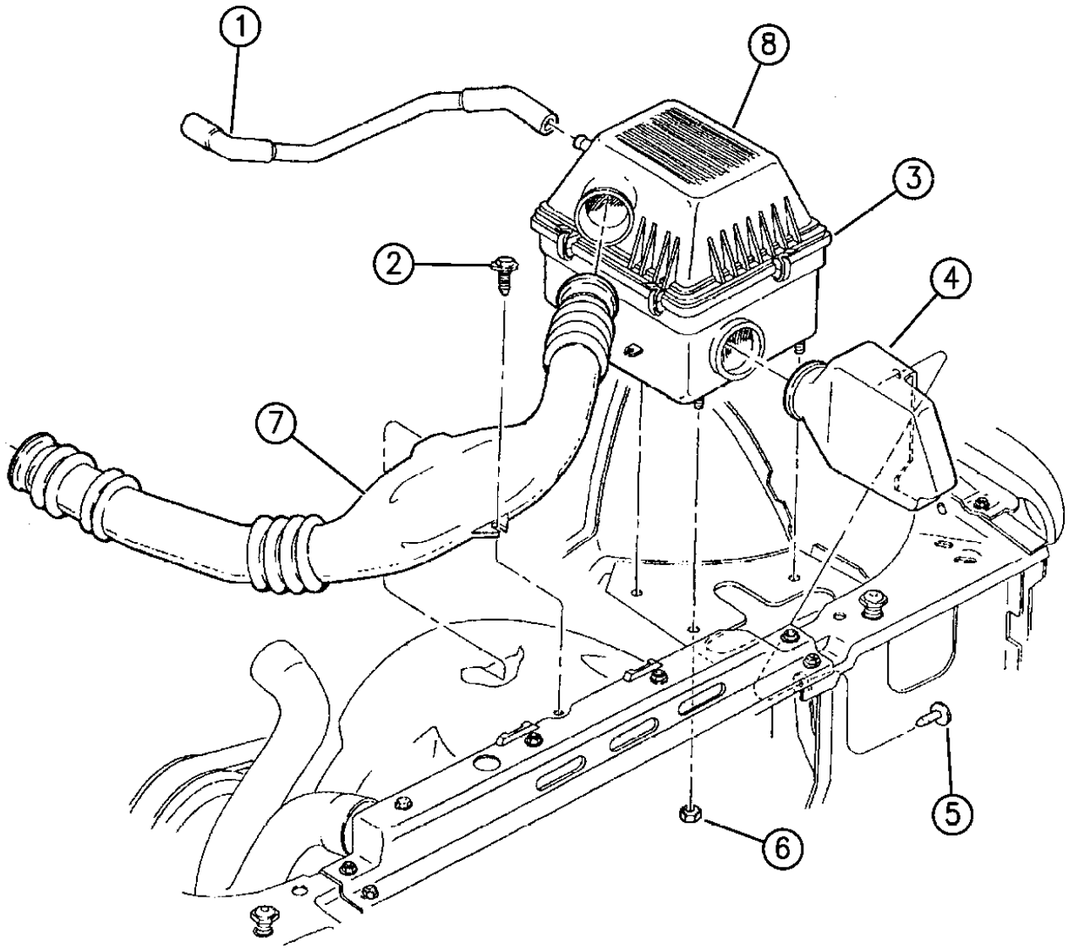

94J14 865

ITEM	PART NUMBER	QTY	BODY	MODEL	DESCRIPTION
1	5303 2030	1			TUBE, Oil Separator to Air Cleaner
2		AR			SCREW, (Not Serviced)
3	5300 7385	1			BODY, Air Cleaner
4	5300 7447	1			DUCT, Air Inlet
5	6030 441	1			PIN
6		3			NUT, (Not Serviced)
7	5303 0416	1			HOSE, Clean Air
8	4854 076	1			COVER, Air Cleaner
-	5303 0688	1			FILTER, Air Cleaner

MODEL CODES:

72=2 DR Wagon
74=4 DR Wagon
77=Open Body 93" Whlbase
78=Open Body 103" Whlbase - Export
T=2WD
J,N=4WD
U=4WD (RHD)

BODY STYLES:

YJ=Wrangler (4X4) "S"
Weangler (4X4) SE
Wrangler (4X4) Sahara
Wrangler (4X4) Renegade

XJ=Cherokee SE
Cherokee Sport
Cherokee Country

ZJ=Grand Cherokee SE
Grand Cherokee Laredo
Grand Cherolee Limited
ZG=Grand Cherokee European

Y1=Wrangler
X1=Cherokee
Z1=Grand Cherokee
KDX=Vehicles

AR = Use as Required - = Non Illustrated Part P.A.R. = Paint as Required

AIR INTAKE SYSTEM YJ, XJ BODY
Figure 14-903

14-903

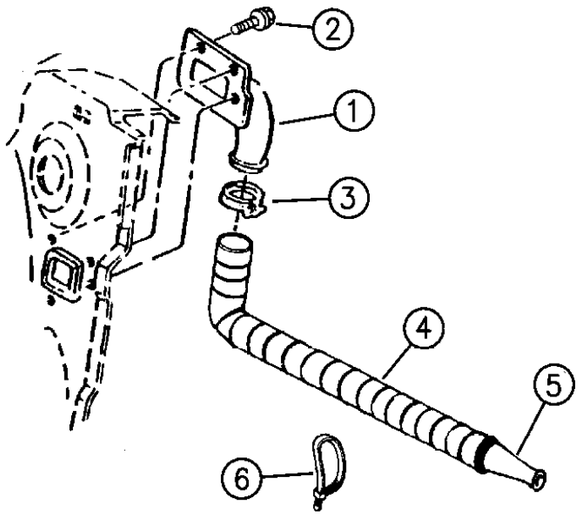

94J14 903

ITEM	PART NUMBER	QTY	BODY	MODEL	DESCRIPTION
1					ADAPTER, Ambient Air Inlet
	5303 0203	1		YJ	EXPORT
	5303 0357	1		XJ	EXPORT
2	J400 1701	3			SCREW, Adapter
3		1			CLAMP, Inlet Hose, (Not Serviced)
4	5300 5326	1			HOSE, Inlet
5	3300 4033	1			HORN, Inlet Air
6	6016 155	2			STRAP, Hose

MODEL CODES:

72=2 DR Wagon
74=4 DR Wagon
77=Open Body 93" Whlbase
78=Open Body 103" Whlbase - Export
T=2WD
J,N=4WD
U=4WD (RHD)

BODY STYLES:

YJ=Wrangler (4X4) "S"
Weangler (4X4) SE
Wrangler (4X4) Sahara
Wrangler (4X4) Renegade

XJ=Cherokee SE
Cherokee Sport
Cherokee Country

ZJ=Grand Cherokee SE
Grand Cherokee Laredo
Grand Cherolee Limited
ZG=Grand Cherokee European

Y1=Wrangler
X1=Cherokee
Z1=Grand Cherokee
KDX=Vehicles

AR = Use as Required - = Non Illustrated Part P.A.R. = Paint as Required

AIR INTAKE AND CHARGE AIR COOLER SYSTEM 2.1L DIESEL ENGINE XJ BODY
Figure 14-905

14–905

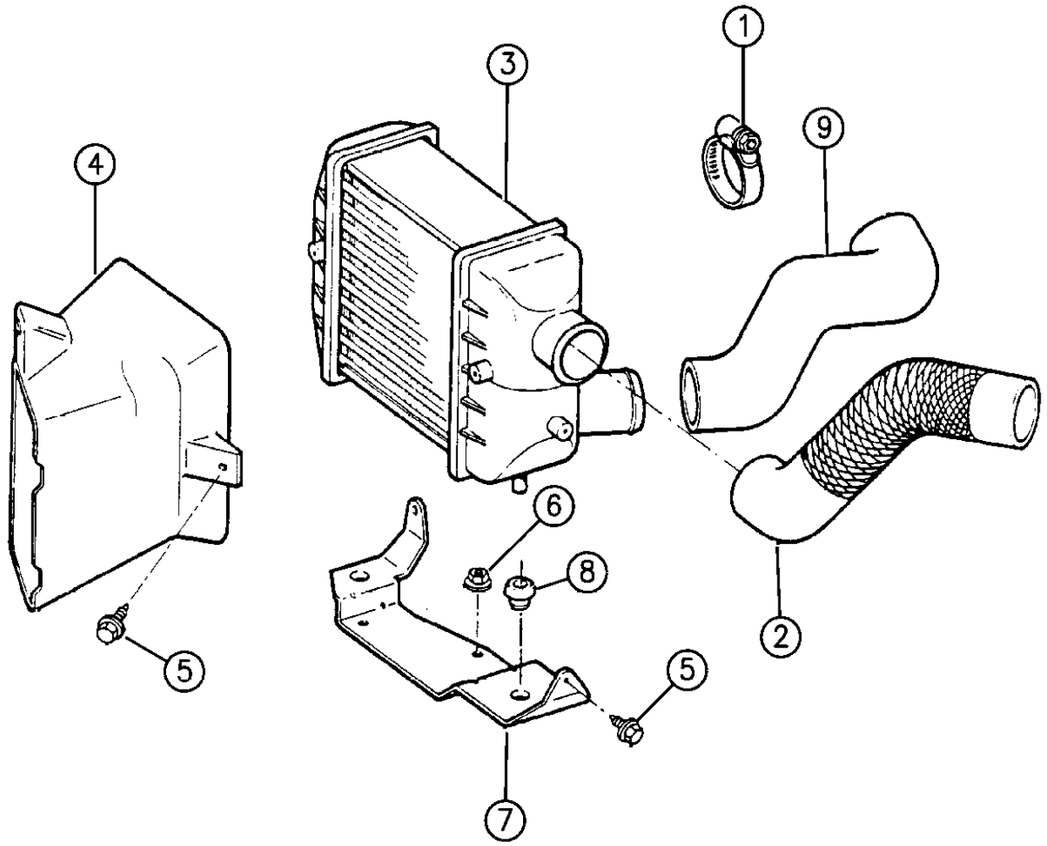

94J14 905

ITEM	PART NUMBER	QTY	BODY	MODEL	DESCRIPTION
1	J320 3078	4			CLAMP, Hose
2	5202 8051	1			HOSE ASSEMBLY, Intercooler to Manifold
3	5300 1178	1			COOLER, Charge Air
4	5200 2582	1			DUCT, Cooler
5	3420 2071	4			SCREW
6	1150 2729	3			NUT
7	5300 1182	1			BRACKET, Cooler Mounting
8	J068 7550	2			GROMMET
9	5202 8054	1			HOSE, Turbo to Cooler

MODEL CODES:

72=2 DR Wagon
74=4 DR Wagon
77=Open Body 93" Whlbase
78=Open Body 103" Whlbase - Export
T=2WD
J,N=4WD
U=4WD (RHD)

BODY STYLES:

YJ=Wrangler (4X4) "S"
Weangler (4X4) SE
Wrangler (4X4) Sahara
Wrangler (4X4) Renegade

XJ=Cherokee SE
Cherokee Sport
Cherokee Country

ZJ=Grand Cherokee SE
Grand Cherokee Laredo
Grand Cherolee Limited
ZG=Grand Cherokee European

Y1=Wrangler
X1=Cherokee
Z1=Grand Cherokee
KDX=Vehicles

AR = Use as Required - = Non Illustrated Part P.A.R. = Paint as Required

AIR INTAKE AND CHARGE AIR COOLER SYSTEM 2.5L DIESEL ENGINE XJ BODY
Figure 14-910

14-910A

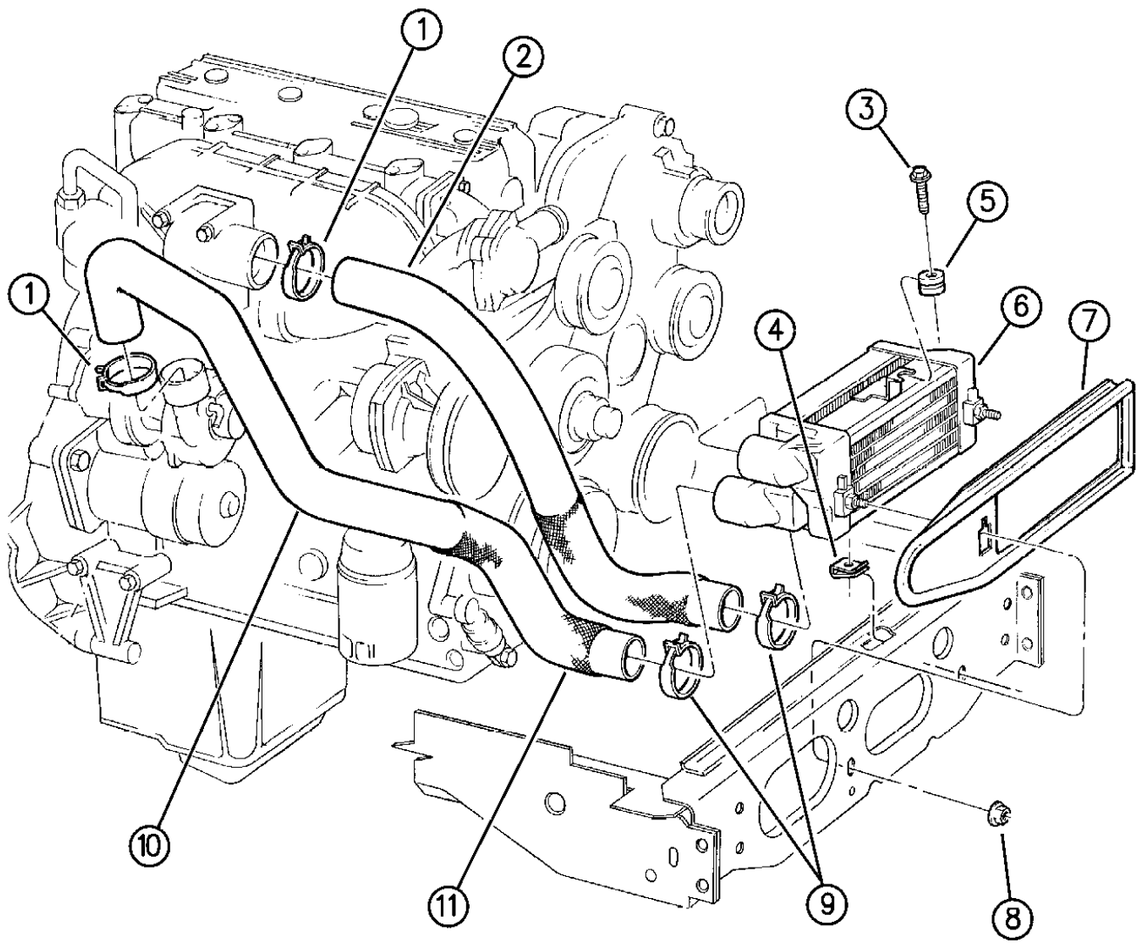

94J14 910

ITEM	PART NUMBER	QTY	BODY	MODEL	DESCRIPTION
1	3200 2366	2			CLAMP
2	5202 8094	1			HOSE, Outlet
3	6100 569	1			SCREW
4	3420 2462	1			CLIP
5	5202 8236	1			ISOLATOR
6	5202 8089	1			COOLER, Charge Air ***
7	5202 8235	1			SEAL, Cooler
8	3420 1358	2			NUT
9	5202 8008	1			CLAMP
10	5207 9497	1			HOSE, Inlet
					SLEEVE, Hose
11	5202 8240	1			Outlet Hose
	5202 8372	1			Inlet Hose

MODEL CODES:

72=2 DR Wagon
74=4 DR Wagon
77=Open Body 93" Whlbase
78=Open Body 103" Whlbase - Export
T=2WD
J,N=4WD
U=4WD (RHD)

BODY STYLES:

YJ=Wrangler (4X4) "S"
Weangler (4X4) SE
Wrangler (4X4) Sahara
Wrangler (4X4) Renegade
XJ=Cherokee SE
Cherokee Sport
Cherokee Country
ZJ=Grand Cherokee SE
Grand Cherokee Laredo
Grand Cherolee Limited
ZG=Grand Cherokee European
Y1=Wrangler
X1=Cherokee
Z1=Grand Cherokee
KDX=Vehicles

AR = Use as Required - = Non Illustrated Part P.A.R. = Paint as Required

AIR INTAKE AND CHARGE AIR COOLER SYSTEM 2.5L DIESEL ENGINE ZG BODY
Figure 14-920

14-920A

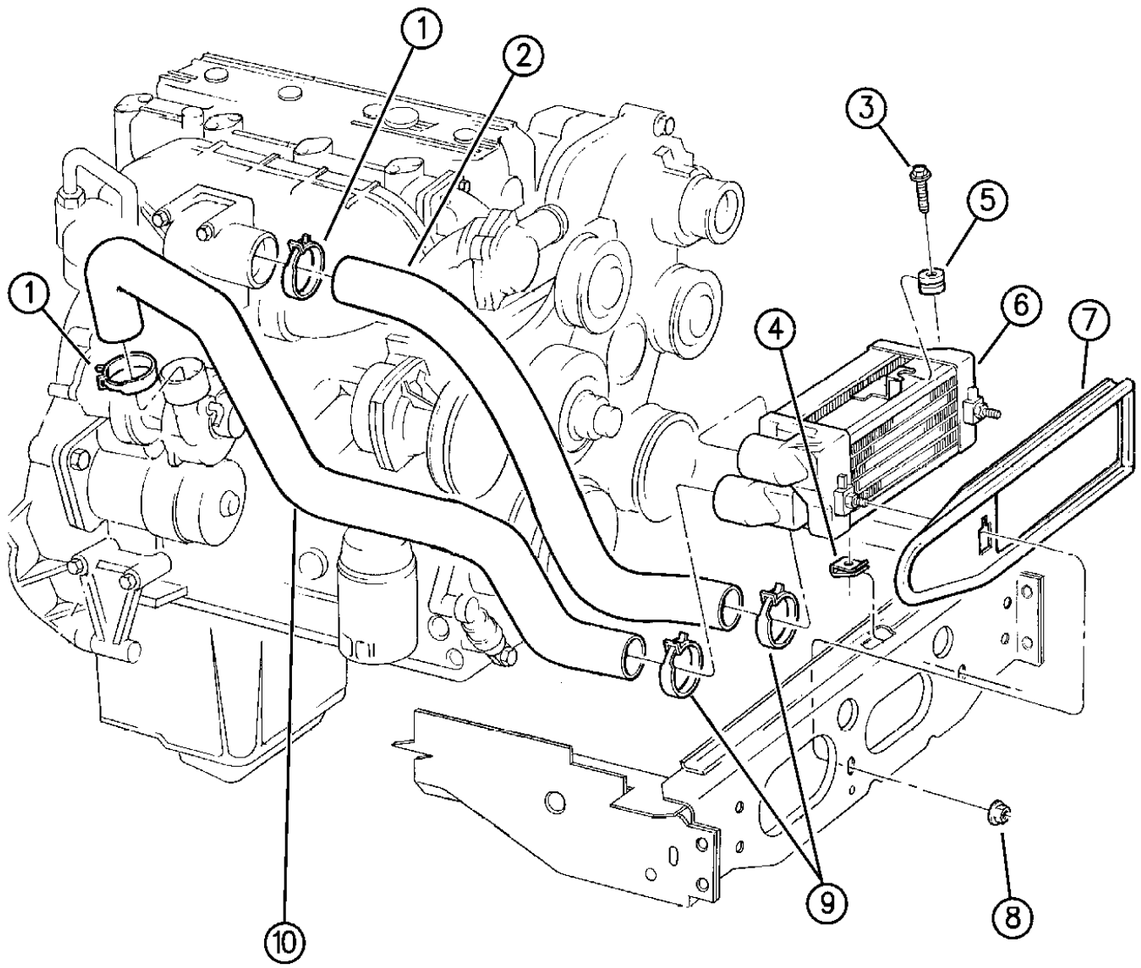

94J14 920

ITEM	PART NUMBER	QTY	BODY	MODEL	DESCRIPTION
1	3200 2366	2			CLAMP
2	5202 8094	1			HOSE, Outlet
3	6100 569	1			SCREW
4	3420 2462	1			CLIP
5	5202 8236	1			ISOLATOR
6	5202 8089	1			COOLER, Charge Air ***
7	5202 8235	1			SEAL, Cooler
8	3420 1358	2			NUT
9	5200 6750	1			CLAMP
10	5202 7750	1			HOSE, Inlet

MODEL CODES:

72=2 DR Wagon
74=4 DR Wagon
77=Open Body 93" Whlbase
78=Open Body 103" Whlbase - Export
T=2WD
J,N=4WD
U=4WD (RHD)

BODY STYLES:

YJ=Wrangler (4X4) "S"
Weangler (4X4) SE
Wrangler (4X4) Sahara
Wrangler (4X4) Renegade
XJ=Cherokee SE
Cherokee Sport
Cherokee Country
ZJ=Grand Cherokee SE
Grand Cherokee Laredo
Grand Cherolee Limited
ZG=Grand Cherokee European
Y1=Wrangler
X1=Cherokee
Z1=Grand Cherokee
KDX=Vehicles

AR = Use as Required - = Non Illustrated Part P.A.R. = Paint as Required

« RETURN TO GROUP INDEX

SPEED CONTROL 2.5L, 4.0L ENGINE XJ BODY
Figure 14-1010

14-1010B

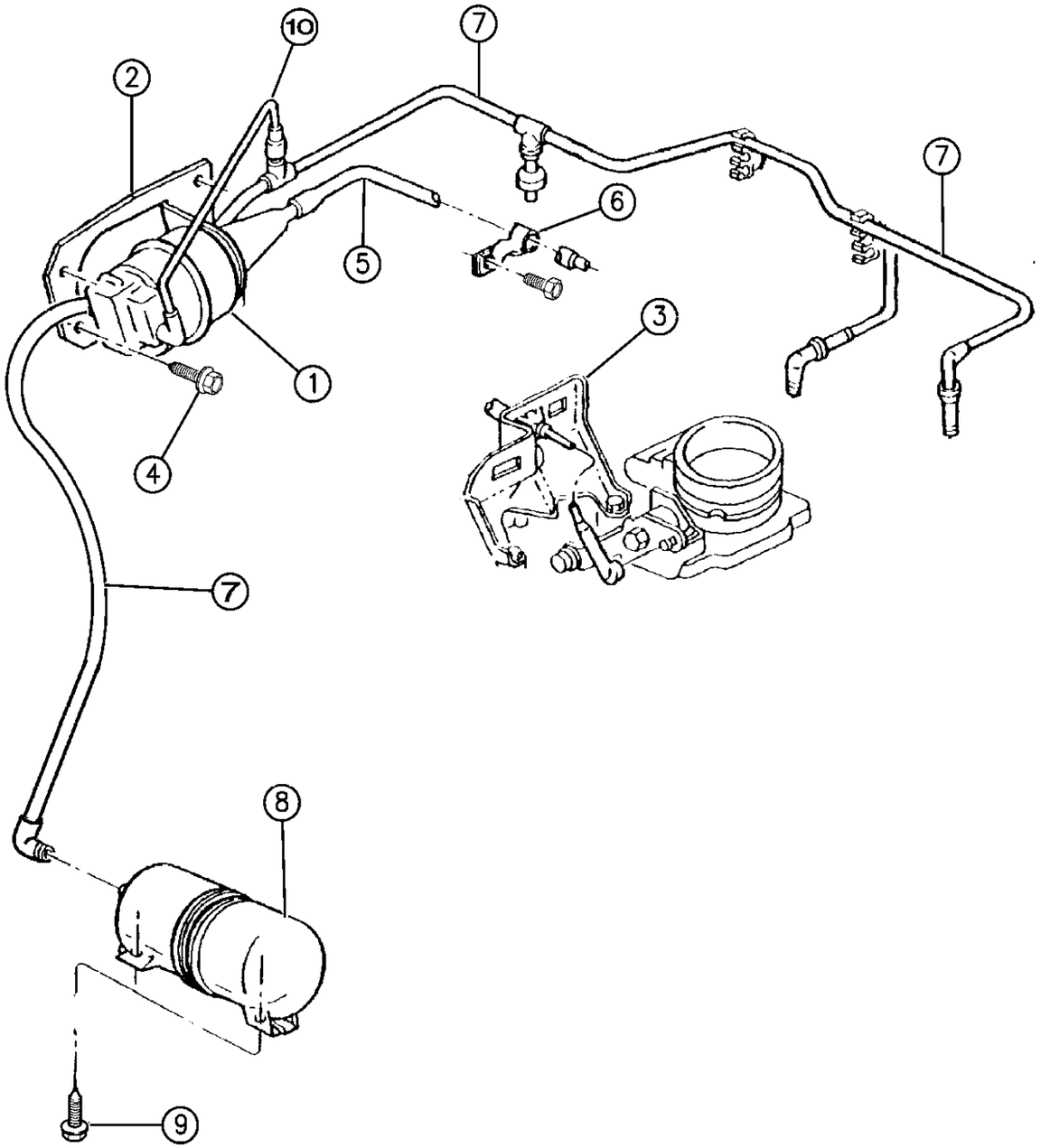

94J14 1010

ITEM	PART NUMBER	QTY	BODY	MODEL	DESCRIPTION
1					SERVO, Speed Control
	5300 9315	1			1994
	5207 8332	1			1995-96
2					BRACKET, Servo Mounting
	5300 7958	1			Up To 3-6-95
	5207 9330	1			After 3-6-95
3		1			GUIDE, Cable
	5300 7485	1			2.5L Eng.
	5300 7486	1			4.0L Eng.
4		3			SCREW, (Not Serviced)
5					CABLE, Speed Control
	5207 8291	1			1994
	5303 0839	1			1995-96
6	5300 9375	1			CLIP, Cable Hold Down
	6025 867	1			CLIP, Cable to Servo Mounting
7					HOSE, Vacuum Supply
	5503 5649	1			2.5L Eng.
					4.0L eng.
	5503 5650	1			Up To 6-1-95
	5503 7188	1			After 6-1-95
8	5200 4366	1			RESERVOIR, Vacuum
9		2			SCREW, (Not Serviced)
10	5207 8082	1			HARNESS, Vacuum Reservoir

MODEL CODES:

72=2 DR Wagon
74=4 DR Wagon
77=Open Body 93" Whlbase
78=Open Body 103" Whlbase - Export
T=2WD
J,N=4WD
U=4WD (RHD)

BODY STYLES:

YJ=Wrangler (4X4) "S"
Weangler (4X4) SE
Wrangler (4X4) Sahara
Wrangler (4X4) Renegade
XJ=Cherokee SE
Cherokee Sport
Cherokee Country
ZJ=Grand Cherokee SE
Grand Cherokee Laredo
Grand Cherolee Limited
ZG=Grand Cherokee European
Y1=Wrangler
X1=Cherokee
Z1=Grand Cherokee
KDX=Vehicles

AR = Use as Required - = Non Illustrated Part P.A.R. = Paint as Required

« RETURN TO GROUP INDEX

SPEED CONTROL 2.1L DIESEL ENGINE XJ BODY
Figure 14-1020

14-1020

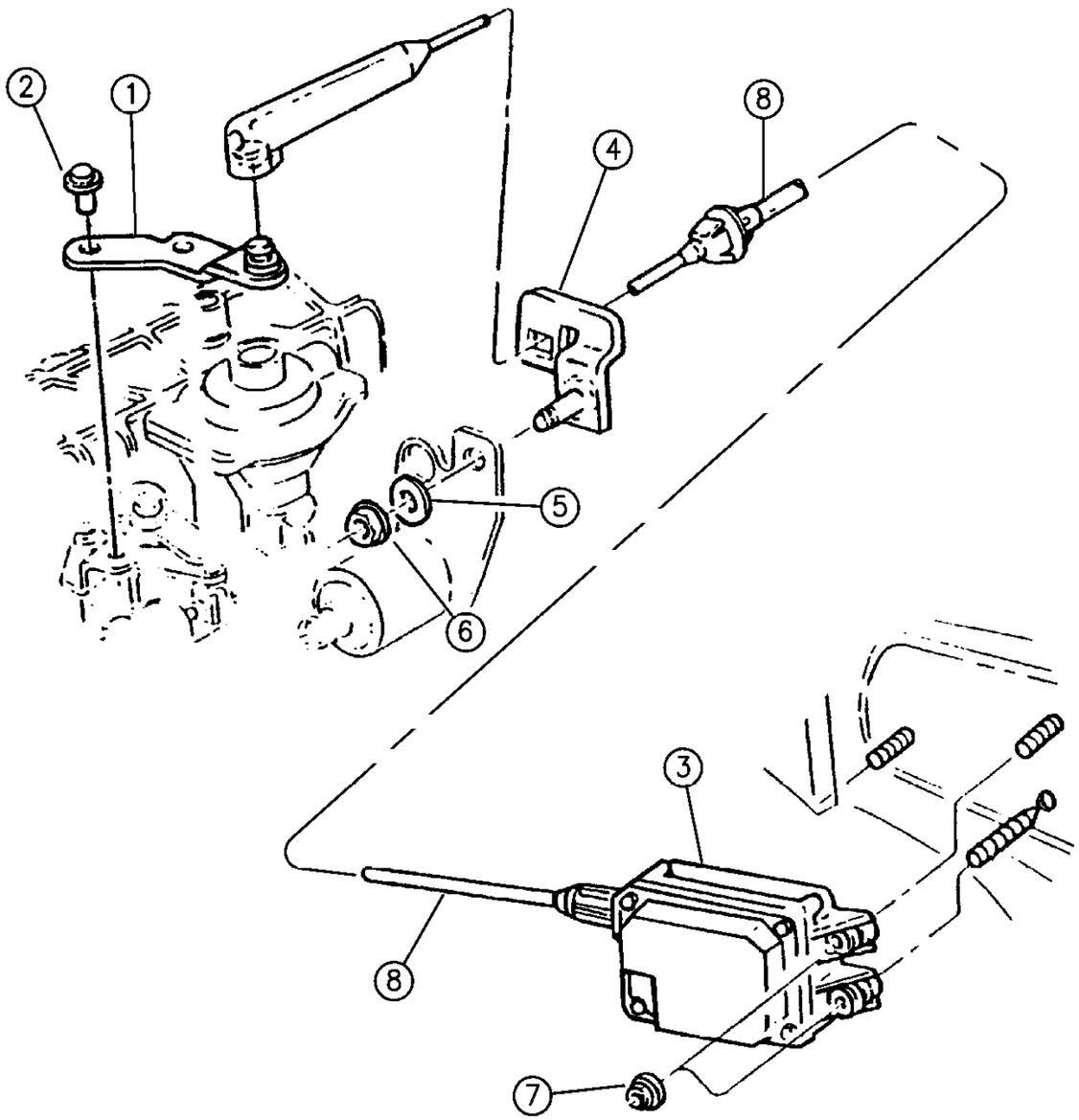

ITEM	PART NUMBER	QTY	BODY	MODEL	DESCRIPTION
1	5300 8390	1			LEVER, Cable Linkage
2	3420 1807	2			BOLT
3	5300 7960	1			MOTOR, w/Cable, Stepper
4	5207 7969	1			BRACKET, Cable Mounting
5	1150 0306	1			WASHER
6	3420 1658	1			NUT
7		3			NUT, (Not Serviced)
8	5300 7959	1			CABLE, Stepper Motor

MODEL CODES:

72=2 DR Wagon
74=4 DR Wagon
77=Open Body 93" Whlbase
78=Open Body 103" Whlbase - Export
T=2WD
J,N=4WD
U=4WD (RHD)

BODY STYLES:

YJ=Wrangler (4X4) "S"
Weangler (4X4) SE
Wrangler (4X4) Sahara
Wrangler (4X4) Renegade

XJ=Cherokee SE
Cherokee Sport
Cherokee Country

ZJ=Grand Cherokee SE
Grand Cherokee Laredo
Grand Cherolee Limited
ZG=Grand Cherokee European

Y1=Wrangler
X1=Cherokee
Z1=Grand Cherokee
KDX=Vehicles

AR = Use as Required - = Non Illustrated Part P.A.R. = Paint as Required

« RETURN TO GROUP INDEX

SPEED CONTROL 2.5L DIESEL ENGINE XJ BODY
Figure 14-1025

14-1025

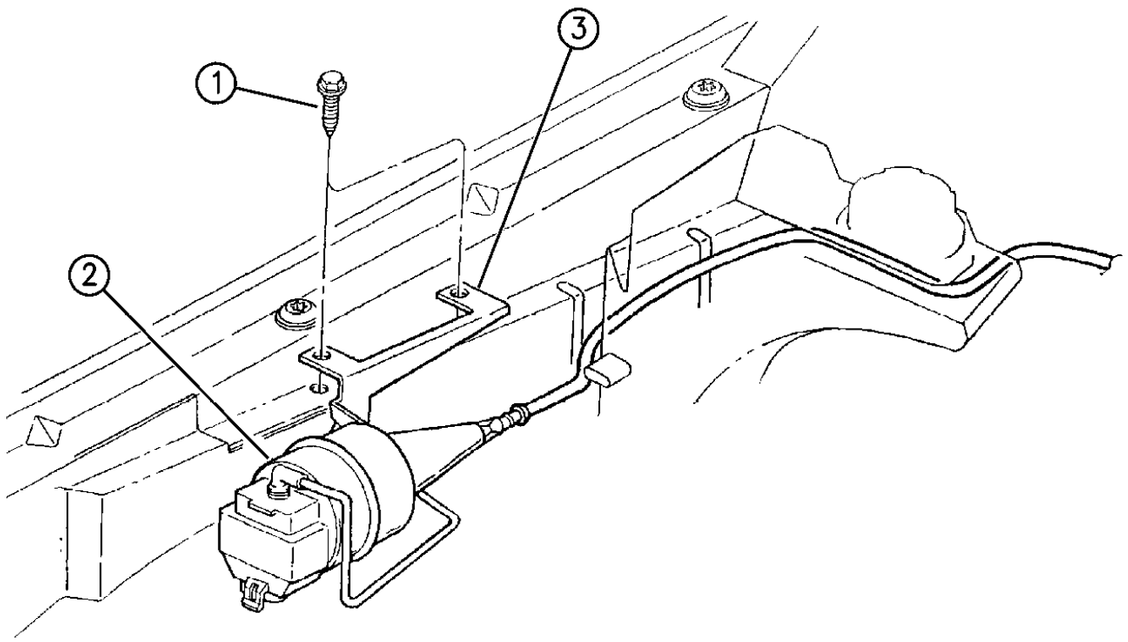

ITEM	PART NUMBER	QTY	BODY	MODEL	DESCRIPTION
1	6032 824	2			SCREW
2					ASSEMBLY, Speed Control ***
					Consists of:
	5300 9315	1			Servo
	6502 493	1			Nut
	5207 8740	1			Cable
	6025 867	1			Clip
	5207 8741	1			Vacuum Harness
	4669 110	1			Vapor Tube
3	5207 8739	1			BRACKET, Servo

MODEL CODES:

72=2 DR Wagon
74=4 DR Wagon
77=Open Body 93" Whlbase
78=Open Body 103" Whlbase - Export
T=2WD
J,N=4WD
U=4WD (RHD)

BODY STYLES:

YJ=Wrangler (4X4) "S"
Weangler (4X4) SE
Wrangler (4X4) Sahara
Wrangler (4X4) Renegade
XJ=Cherokee SE
Cherokee Sport
Cherokee Country
ZJ=Grand Cherokee SE
Grand Cherokee Laredo
Grand Cherolee Limited
ZG=Grand Cherokee European
Y1=Wrangler
X1=Cherokee
Z1=Grand Cherokee
KDX=Vehicles

94J14 1025

AR = Use as Required - = Non Illustrated Part P.A.R. = Paint as Required

« RETURN TO GROUP INDEX

SPEED CONTROL ZJ BODY
Figure 14-1030

14-1030D

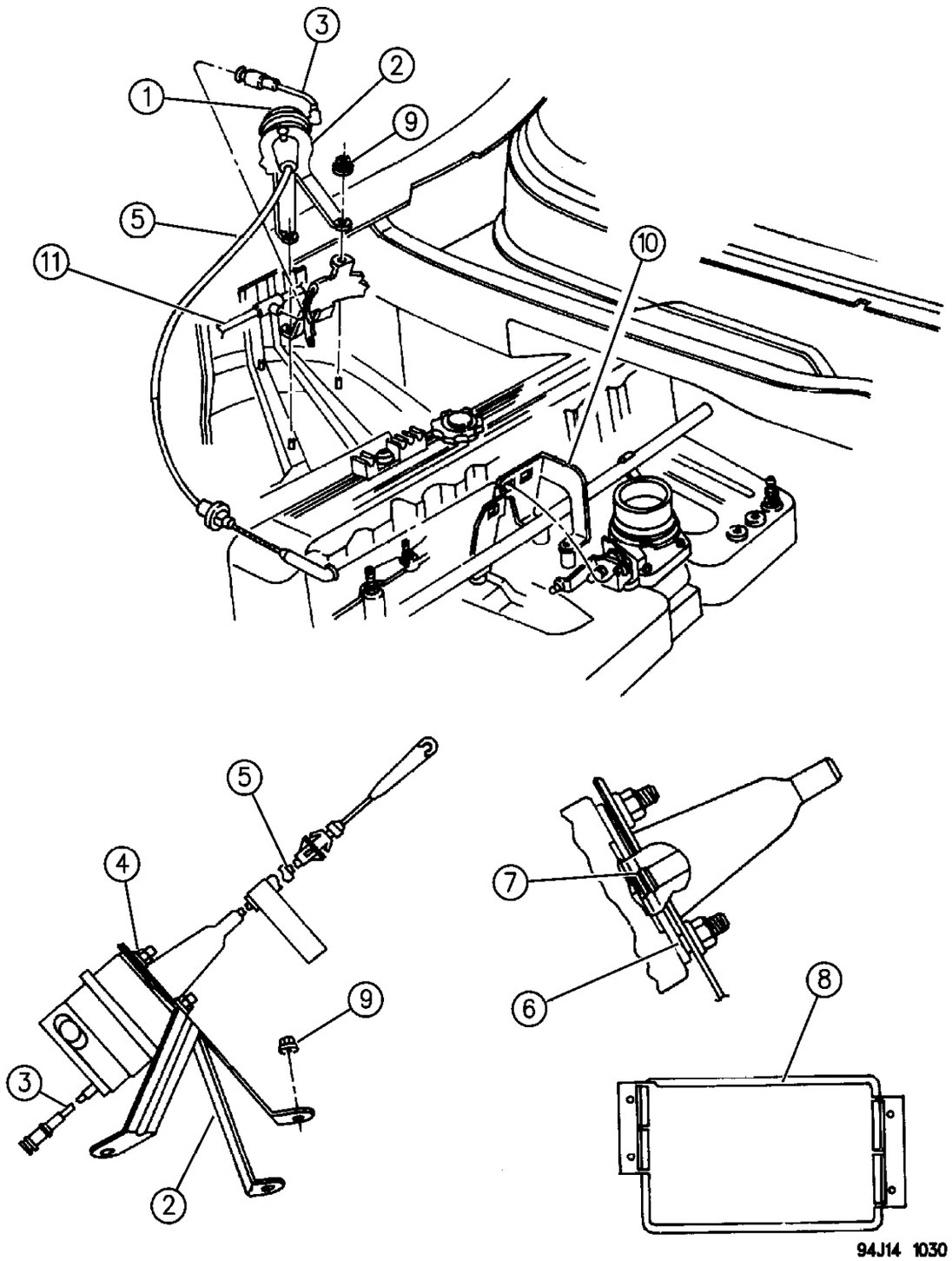

ITEM	PART NUMBER	QTY	BODY	MODEL	DESCRIPTION
1	5300 9315	1			SERVO, Speed Control
2					BRACKET, Servo Mtg.
	5207 7997	1			4.0L, 5.2L Eng.
	5305 4324			ZG	4.0L Eng. (RHD)
3	5207 8684	1			HARNESS ASSEMBLY, Vacuum ***
4					NUT, (Not Serviced)
5					CABLE, Speed Control
	5207 8292	1			4.0L Eng.
	5305 4243	1		ZG	4.0L Eng. (RHD)
	5207 8846	1			5.2L Eng.
6	6100 840	2			NUT, Spring Push On
7	6025 867	1			CLIP
8	5503 5614	1			RESERVOIR, Vacuum
9	6501 140	3			NUT
10	5300 7620	1			GUIDE, Cable
11					HARNESS, Vacuum
					4.0L Eng.
	5503 6064	1			1994
	5503 6875	1			1995
	5511 5790	1			1996
	5503 6876	1			5.2L Eng.
-	5207 9029	1			GUIDE, Cable

MODEL CODES:

72=2 DR Wagon
74=4 DR Wagon
77=Open Body 93" Whlbase
78=Open Body 103" Whlbase - Export
T=2WD
J,N=4WD
U=4WD (RHD)

BODY STYLES:

YJ=Wrangler (4X4) "S"
Weangler (4X4) SE
Wrangler (4X4) Sahara
Wrangler (4X4) Renegade
XJ=Cherokee SE
Cherokee Sport
Cherokee Country
ZJ=Grand Cherokee SE
Grand Cherokee Laredo
Grand Cherolee Limited
ZG=Grand Cherokee European
Y1=Wrangler
X1=Cherokee
Z1=Grand Cherokee
KDX=Vehicles

AR = Use as Required - = Non Illustrated Part P.A.R. = Paint as Required

« RETURN TO GROUP INDEX

SPEED CONTROL 2.5L DIESEL ENGINE ZG BODY
Figure 14-1035

14-1035

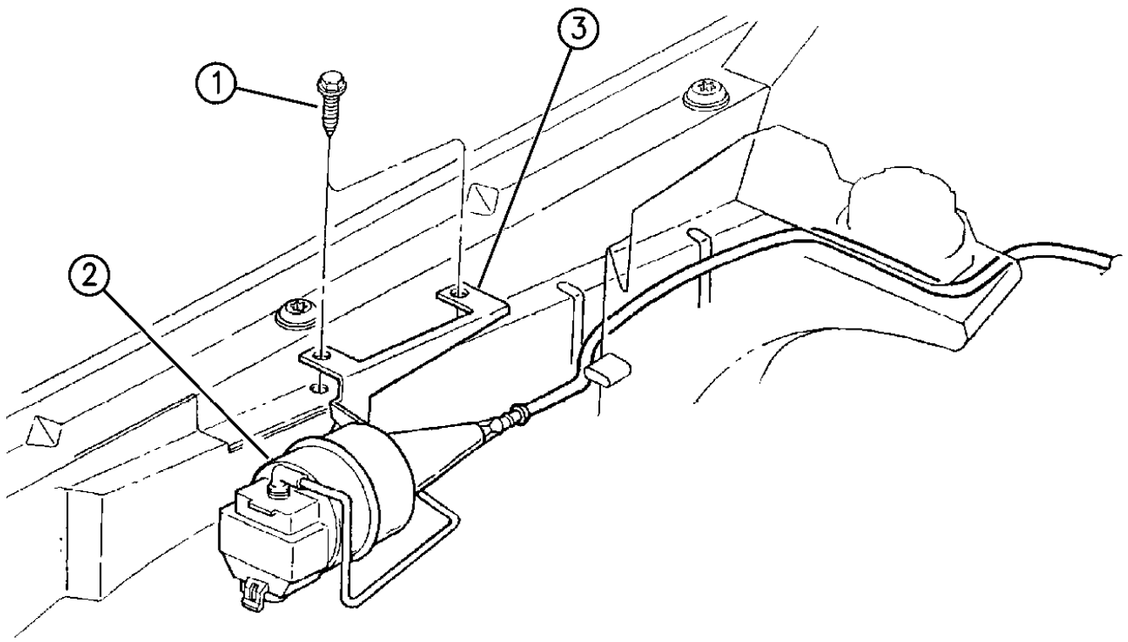

ITEM	PART NUMBER	QTY	BODY	MODEL	DESCRIPTION
1	6032 824	2			SCREW
2					ASSEMBLY, Speed Control ***
					Consists of:
	5300 9315	1			Servo
	6502 493	1			Nut
	5207 8740	1			Cable
	6025 867	1			Clip
	5207 8741	1			Vacuum Harness
	4669 110	1			Vapor Tube
3	5207 8739	1			BRACKET, Servo

MODEL CODES:

72=2 DR Wagon
74=4 DR Wagon
77=Open Body 93" Whlbase
78=Open Body 103" Whlbase - Export
T=2WD
J,N=4WD
U=4WD (RHD)

BODY STYLES:

YJ=Wrangler (4X4) "S"
Weangler (4X4) SE
Wrangler (4X4) Sahara
Wrangler (4X4) Renegade
XJ=Cherokee SE
Cherokee Sport
Cherokee Country
ZJ=Grand Cherokee SE
Grand Cherokee Laredo
Grand Cherolee Limited
ZG=Grand Cherokee European
Y1=Wrangler
X1=Cherokee
Z1=Grand Cherokee
KDX=Vehicles

94J14 1035

AR = Use as Required - = Non Illustrated Part P.A.R. = Paint as Required

ACCELERATOR PEDAL YJ, XJ, ZJ BODY
Figure 14-1110

14-1110

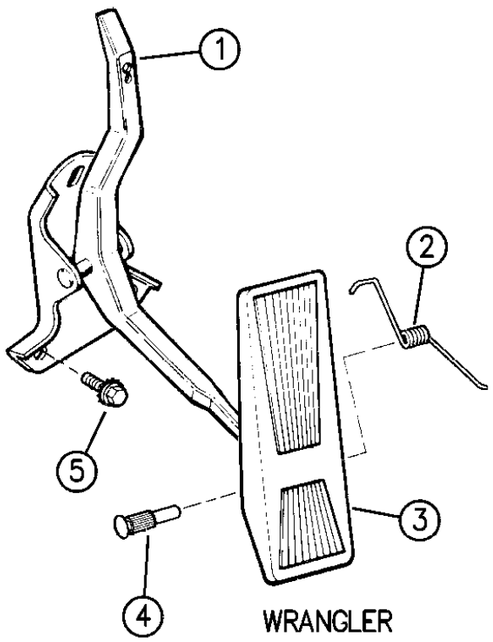

WRANGLER

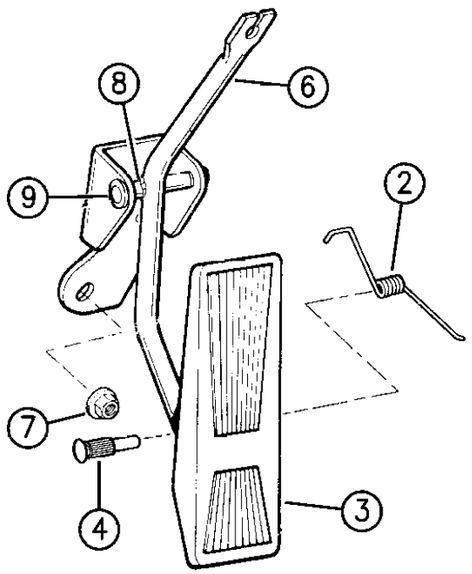

CHEROKEE

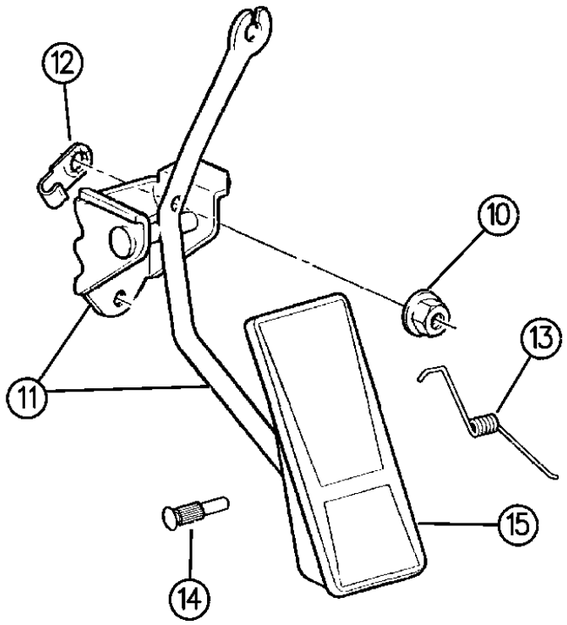

GRAND CHEROKEE

94J14 1110

ITEM	PART NUMBER	QTY	BODY	MODEL	DESCRIPTION
1	5207 8586	1		YJ	PEDAL, Accelerator, w/Bracket/Lever
2					SPRING, Return
	J319 3369	1		YJ,XJ	
3	5300 3932	1		YJ,XJ	PAD, Accelerator Pedal
4	J322 0231	1		YJ,XJ	PIN, Accelerator Pad to Lever
5	J400 4801	3		YJ	SCREW
6					PEDAL, Accelerator, w/Bracket
	5300 5241	1		XJ	
	5207 9308	1		XJ	RHD
7	6500 274	2			NUT
8	J317 1414	2			BUSHING, Accelerator Pedal
9	J044 6188	2		XJ	WASHER
10	1150 3745	2		ZJ	NUT
11					PEDAL, w/Bracket Accelerator
	5207 8167	1		ZJ	
	5305 4125	1		ZG	
	6100 876	2		ZJ	WASHER
	5525 4848	2		ZJ	WASHER, Stud Sealer
12	5300 9882	1		ZJ	CLIP, Park Lock Cable
13	5207 8168	1		ZJ	SPRING, Return
14	J322 0231	1		ZJ	PIN, Pad to Lever
15	5300 3932	1			PAD, Accelerator

MODEL CODES:

72=2 DR Wagon
74=4 DR Wagon
77=Open Body 93" Whlbase
78=Open Body 103" Whlbase - Export
T=2WD
J,N=4WD
U=4WD (RHD)

BODY STYLES:

YJ=Wrangler (4X4) "S"
Weangler (4X4) SE
Wrangler (4X4) Sahara
Wrangler (4X4) Renegade

XJ=Cherokee SE
Cherokee Sport
Cherokee Country

ZJ=Grand Cherokee SE
Grand Cherokee Laredo
Grand Cherolee Limited
ZG=Grand Cherokee European

Y1=Wrangler
X1=Cherokee
Z1=Grand Cherokee
KDX=Vehicles

AR = Use as Required - = Non Illustrated Part P.A.R. = Paint as Required

SAGIPARTS

GROUP-16
PROP SHAFTS

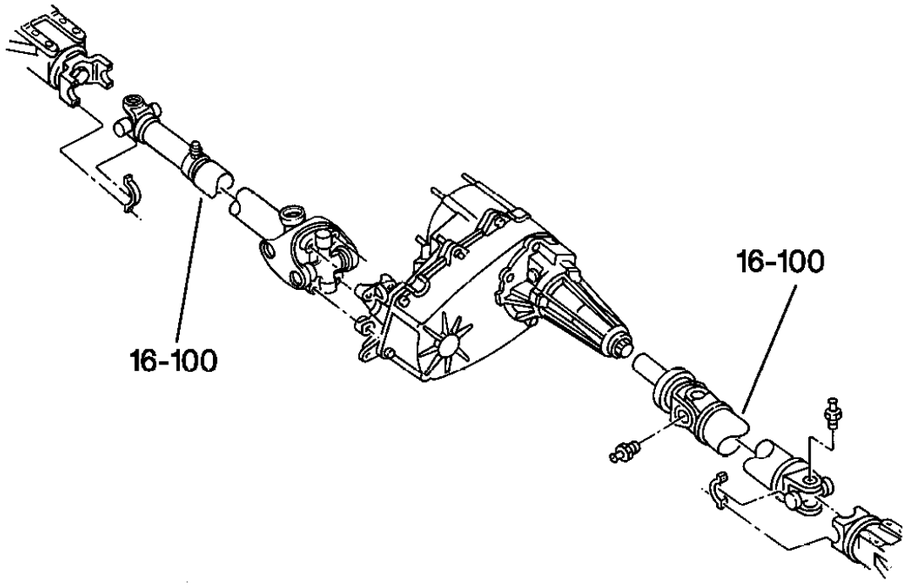

16-100 PROP SHAFT & U JOINT 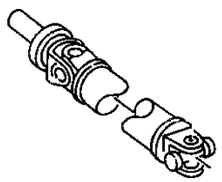			

ILLUSTRATION TITLE **GROUP-FIG. NO.**

PROPELLER SHAFT

PROPELLER SHAFT AND UNIVERSAL JOINT YJ BODY . . . . . Fig. 16-105
PROPELLER SHAFT AND UNIVERSAL JOINT, FRONT XJ, ZJ BODY . . . . . Fig. 16-110
PROPELLER SHAFT AND UNIVERSAL JOINT, REAR XJ, ZJ BODY . . . . . Fig. 16-120

PROPELLER SHAFT AND UNIVERSAL JOINT YJ BODY
Figure 16-105

16-105B

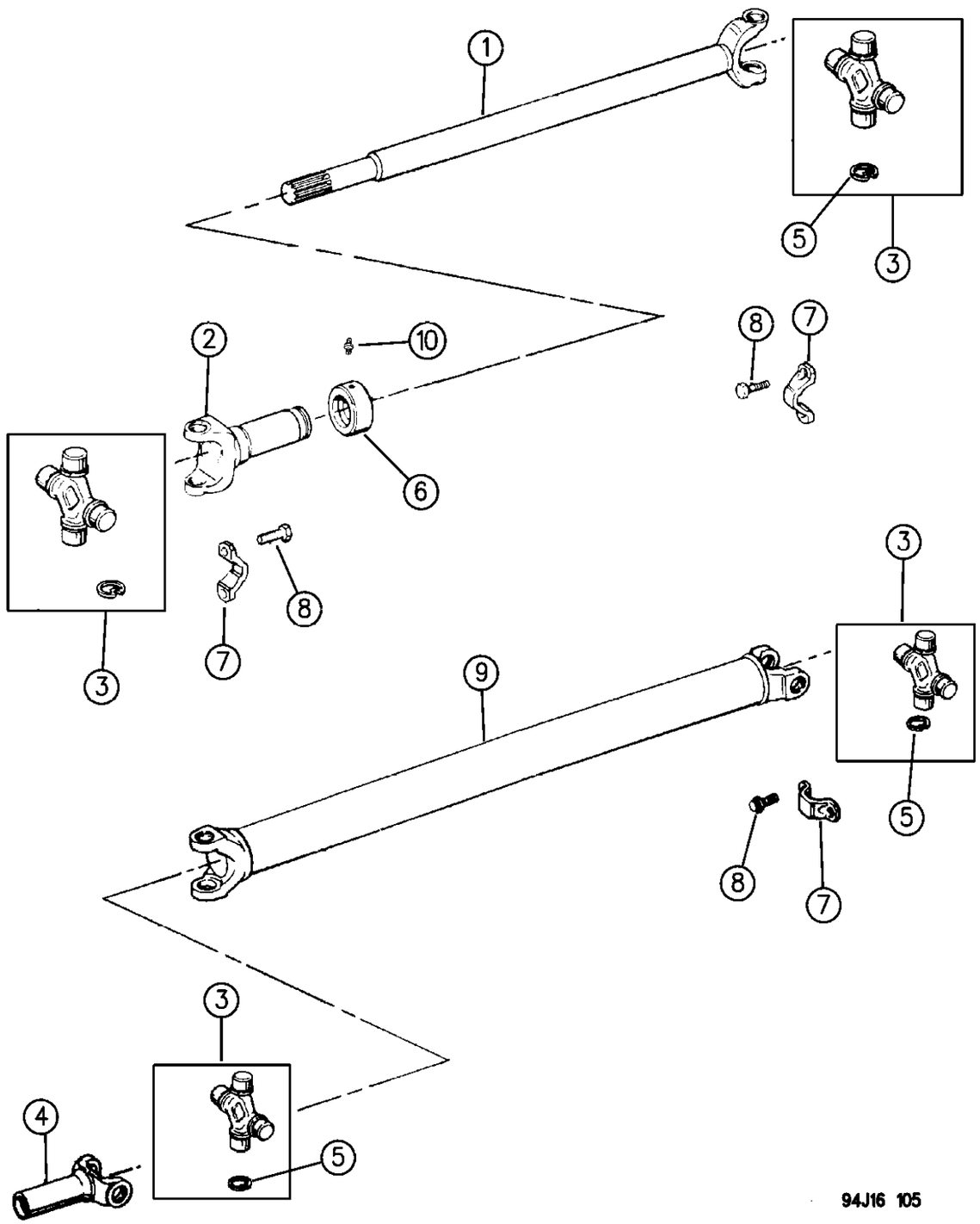

ITEM	PART NUMBER	QTY	BODY	MODEL	DESCRIPTION
1					SHAFT, Front Propeller
	5208 8028	1			2.5L Eng.
	5208 8027	1			4.0L Eng. w/Man. Trans
	5208 8028	1			4.0L Eng. w/Auto Trans
2	8350 1594	1			YOKE, Slip
3					PACKAGE, U-Joint
	4728 937	1			Front
	4746 936	1			Rear
	4728 937	1	Y1		Rear
4	8350 2855	1			YOKE, Slip
5	J320 7886	AR			RING, Snap
6	8350 1595	1			SEAL
7	J324 0553	6			STRAP, Prop Shaft Att.
8	J400 6928	12			SCREW
9					SHAFT, Rear Propeller
	5209 8220	1	Y1	78	w/2.5L Eng., w/Man. Trans., 1994-95, (w/3.0" Axle Yoke Length)
	5209 8538	1	Y1	78	w/2.5L Eng., w/Man. Trans., 1995, (w/3.7" Axle Yoke Length)
	5209 8218	1	Y1	77	w/4.0L Eng., w/Man. Trans., 1994-95, (w/3.0" Axle YoKe Length)
	5209 8535	1	Y1	77	w/4.0L Eng., w/Man. Trans., 1995, (w/3.7" Axle Yoke Length)
	5209 8221	1	Y1	78	w/4.0L Eng., w/Man. Trans., 1994-95, (w/3.0" Axle Yoke Length)
	5209 8241	1	Y1	78	w/4.0L Eng., w/Auto Trans., 1994-95, (w/3.0" Axle Yoke Length)
	5209 8536	1	Y1	78	w/4.0L Eng., w/Auto Trans., 1995, (w/3.7" Axle Yoke Length)
	5209 8266	1			w/2.5L Eng., w/Man. Trans., 1994-95
	5209 8217	1			w/2.5L Eng., w/Auto Trans., 1994
	5209 8266	1	YJ		w/2.5L Eng., w/Auto Trans., 1995
	5209 8537	1	Y1		w/2.5L Eng., w/Auto Trans., 1995, (w/3.7" Axle Yoke Length)
	5209 9267	1			w/4.0L Eng., w/Man. Trans., 1994-95
	5209 9268	1			w/4.0L Eng., w/Auto Trans., 1994-95
10	8350 7064	1			FITTING, Grease

MODEL CODES:

72=2 DR Wagon
74=4 DR Wagon
77=Open Body 93" Whlbase
78=Open Body 103" Whlbase - Export
T=2WD
J,N=4WD
U=4WD (RHD)

BODY STYLES:

YJ=Wrangler (4X4) "S"
Weangler (4X4) SE
Wrangler (4X4) Sahara
Wrangler (4X4) Renegade
XJ=Cherokee SE
Cherokee Sport
Cherokee Country
ZJ=Grand Cherokee SE
Grand Cherokee Laredo
Grand Cherolee Limited
ZG=Grand Cherokee European
Y1=Wrangler
X1=Cherokee
Z1=Grand Cherokee
KDX=Vehicles

AR = Use as Required - = Non Illustrated Part P.A.R. = Paint as Required

« RETURN TO GROUP INDEX

PROPELLER SHAFT AND UNIVERSAL JOINT, FRONT XJ, ZJ BODY
Figure 16-110

16-110B

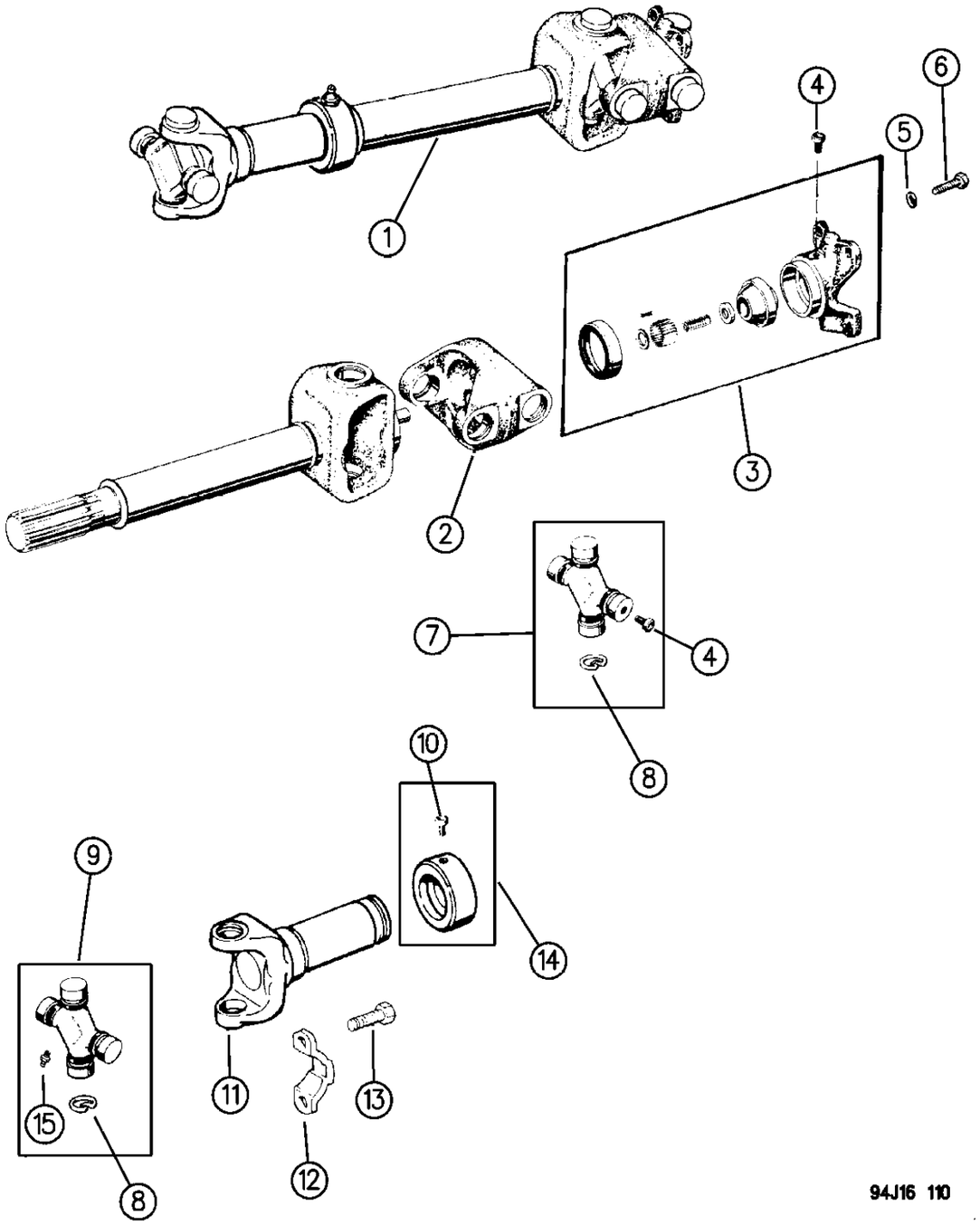

ITEM	PART NUMBER	QTY	BODY	MODEL	DESCRIPTION
1					SHAFT, Front Propeller
	5300 5541	1	XJ,X1		2.5 and 2.1 Diesel Eng. 1994
	5300 5541	1	XJ,X1		2.5L Eng. 1995
	5209 8208	1	XJ,X1		2.5 Diesel Eng. 1995
	5300 5543	1	XJ,X1		4.0 Eng., Manual Trans.
	5300 5542	1	XJ,X1		4.0 Eng., Auto. Trans.
	5209 8344	1	ZJ		4.0 Eng., w/Aisin Seiki Trans.
	5209 8157	1	ZJ		2.5 Diesel Eng., 1994-95
	5209 8706	1	ZJ		2.5 Diesel Eng., 1996
	5209 8707	1	ZG		4.0 Eng., w/A-500 Auto Trans., w/231 Transfer Case 1996
	5208 7805	1	ZJ		4.0 Eng., w/A-500 Auto Trans., w/o Constant Velocity Joint 1994-95
	5209 8790	1	ZJ		ER0,DGK,DHP Up To 11-01-95 Length is 775.5 MM Fully Compressed.Note:Measure from the center of the front U-Joint to the center of the rear U-Joint
	5209 8707	1	ZJ		ER0,DGK,DHP After 11-01-95 Length is 807 MM Fully Compressed. Note:Measure form the center of the front U-Joint to the center of the rear U-Joint.
	5209 8850	1	ZJ		4.0 Eng., w/42RE (DGK) Trans., w/Constant Velocity Joint 1994-96 (Up To 11-1-95)
	5209 9260	1	ZJ		4.0 Eng., w/42RE (DGK) Trans., w/Constant Velocity Joint, w/ (DHR) Transfer Case 1996 (After 11-1-95)
	5300 8427	1	ZJ		5.2 Eng., 46RH (DGR) Trans. w/o constant Velocity Joint 1994-95
	5209 8501	1	ZJ		5.2 Eng., 46RH (DGR) Trans. w/Constant Velocity Joint 1994-95
	5209 9246	1	ZJ		5.2 Eng., 44RE (DGW) Trans. 1996 (Up To 11-1-95)
	5209 8379	1	ZJ		5.2 Eng., 44RE (DGW)Trans. 1996 (After 11-1-95)
2	J813 0296	1			YOKE, Slip
3					FLANGE, Front Prop. Shaft
	4384 663	1			(Up To 2-10-94)
	4897 484AA	1			(After 2-10-94)
4	J099 4826	2			FITTING, Grease
5	J012 0214	AR			WASHER
6	6033 893	AR	XJ		BOLT, .312-24x1.170
	6034 966	4	ZJ		.312-24x1.170, w/o Constant Velocity Joint
	6503 407	6	ZJ		M8x1.25x50.00, w/Constant Velocity Joint
7	J813 0750	2			PACKAGE, U-Joint
8	J320 7886	12			RING, Snap
9	4728 937	1			PACKAGE, U-Joint
10	J813 0300	1			FITTING, Grease
11	8350 1594	1			YOKE, Slip

MODEL CODES:

72=2 DR Wagon
74=4 DR Wagon
77=Open Body 93" Whlbase
78=Open Body 103" Whlbase - Export
T=2WD
J,N=4WD
U=4WD (RHD)

BODY STYLES:

YJ=Wrangler (4X4) "S"
Weangler (4X4) SE
Wrangler (4X4) Sahara
Wrangler (4X4) Renegade
XJ=Cherokee SE
Cherokee Sport
Cherokee Country
ZJ=Grand Cherokee SE
Grand Cherokee Laredo
Grand Cherolee Limited
ZG=Grand Cherokee European
Y1=Wrangler
X1=Cherokee
Z1=Grand Cherokee
KDX=Vehicles

AR = Use as Required - = Non Illustrated Part P.A.R. = Paint as Required

PROPELLER SHAFT AND UNIVERSAL JOINT, FRONT XJ, ZJ BODY
Figure 16-110

16–110B

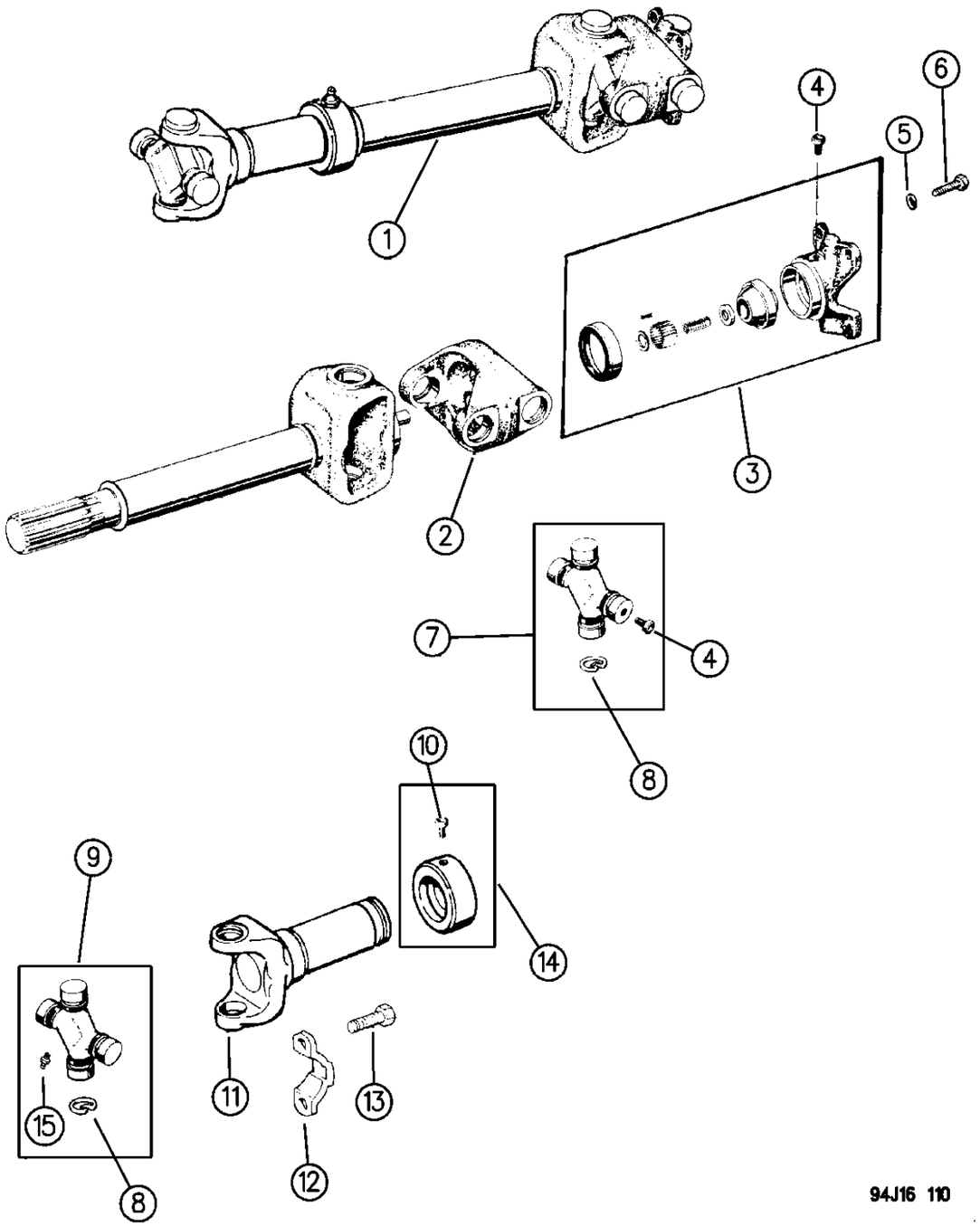

ITEM	PART NUMBER	QTY	BODY	MODEL	DESCRIPTION
12					STRAP, Shaft Att.
	J324 0553	2			w/o Constant Velocity Joint
	5209 8488	2			w/Constant Velocity Joint
13					BOLT
	J400 6928	4			1994
	6503 407	6			1995-96
14	8350 2812	1			SEAL
15	8350 7064	1			FITTING, Grease

MODEL CODES:

72=2 DR Wagon
74=4 DR Wagon
77=Open Body 93" Whlbase
78=Open Body 103" Whlbase - Export
T=2WD
J,N=4WD
U=4WD (RHD)

BODY STYLES:

YJ=Wrangler (4X4) "S"
Weangler (4X4) SE
Wrangler (4X4) Sahara
Wrangler (4X4) Renegade

XJ=Cherokee SE
Cherokee Sport
Cherokee Country

ZJ=Grand Cherokee SE
Grand Cherokee Laredo
Grand Cherolee Limited
ZG=Grand Cherokee European

Y1=Wrangler
X1=Cherokee
Z1=Grand Cherokee
KDX=Vehicles

AR = Use as Required - = Non Illustrated Part P.A.R. = Paint as Required

PROPELLER SHAFT AND UNIVERSAL JOINT, REAR XJ, ZJ BODY
Figure 16-120

16-120A

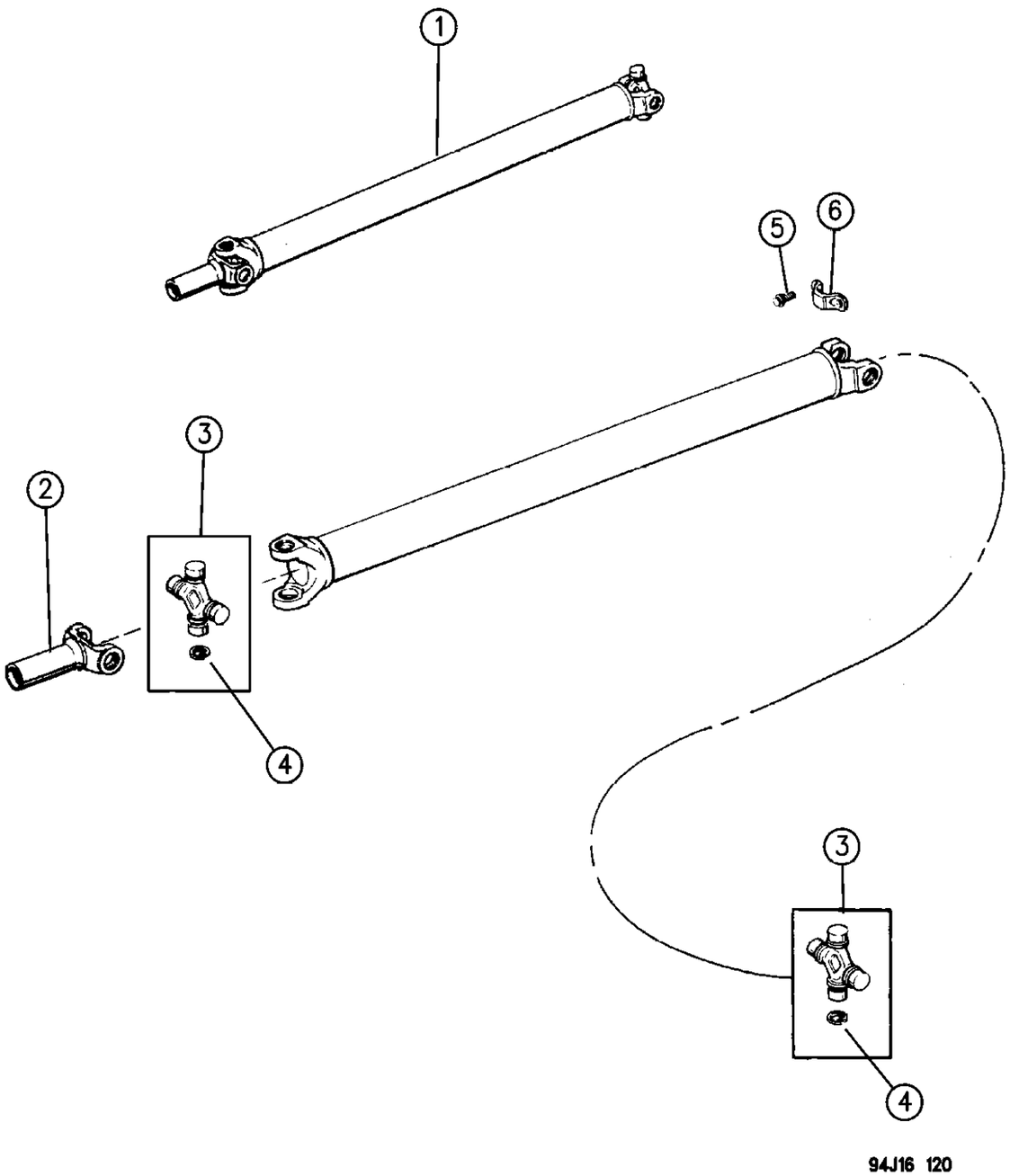

ITEM	PART NUMBER	QTY	BODY	MODEL	DESCRIPTION
1					SHAFT, Propeller
					TWO WHEEL DRIVE
	5300 2210	1	XJ		2.5 Eng., A904 Trans.
	5209 8201	1	XJ		2.5 Eng., Except A904 Trans.
	5209 8214	1	X1		2.5 Eng., Manual Trans.
	5209 8202	1	XJ		4.0 Eng., Dana 35 Rear Axle 1994-95
	5211 1071	1	XJ		4.0 Eng., Dana 35 Rear Axle 1996
	5209 8203	1	XJ		4.0 Eng., Chrysler 8 1/4 or Dana 44 Raer Axle
	5209 8802	1	ZJ		2.5,4.0L Eng., w/Man. Trans.
	5208 7801	1	ZJ		4.0 Eng., A500Se Trans.
	5209 9156	1	ZJ		5.2 Engine
					FOUR WHEEL DRIVE
	5209 8207	1	X1		2.1 Diesel Eng. 1994
	5209 8264	1	XJ,X1		2.5 Diesel Eng., w/o 8.25 Axle 1995
	5209 9412	1	XJ,X1		2.5 Diesel Eng., w/o 8.25 Axle 1996 w/1330 Series Yoke.
	5209 8265	1	XJ,X1		2.5 Diesel Eng., w/8.25 Axle 1995-96
	5209 8215	1	XJ,X1		2.5 Eng., Manual Trans.
	5209 8204	1	XJ		4.0 Eng., Auto Trans., Dana 35 Rear Axle 1994-95
	5209 8731	1	XJ		4.0 Eng., Auto Trans., Dana 35 Rear Axle 1996
	5209 8205	1	XJ		4.0 Eng., Auto Trans., Chrysler 8 1/4 or Dana 44 Rear Axle 1994
	5209 9059	1	XJ		4.0 Eng., Auto Trans., Chrysler 8 1/4 or Dana 44 Rear Axle 1995
	5209 8814	1	XJ		4.0 Eng., Auto Trans., Chrysler 8 1/4 or Dana 44 Rear Axle 1996
	5209 8206	1	XJ		4.0 Eng., Manual Trans., Dana 35 Rear Axle, 1994-95
	5209 8730	1	XJ		4.0 Eng., Manual Trans., Dana 35 Rear Axle, 1996
	5209 8216	1	XJ		4.0 Eng., Manual Trans., Chrysler 8 1/4 or Dana 44 Rear Axle 1994
	5209 9062	1	XJ		4.0 Eng., Manual Trans., Chrysler 8 1/4 or Dana 44 Rear Axle 1995
	5209 8732	1	XJ		4.0 Eng., Manual Trans., Chrysler 8 1/4 or Dana 44 Rear Axle 1996
	5209 8700	1	ZG		2.5L Diesel Eng., Manual Trans.
	5300 7092	1	ZJ		4.0 Eng., Manual Trans.
	5209 8164	1	ZJ		4.0 Eng., Auto Trans. 1994-95
	5209 8164	1	ZJ		4.0 Eng., w/249 Transfer Case 1996 (w/Tag 52098703 Order Serv. Shaft 52111703)
	5209 8904	1	ZJ		4.0 Eng., w/242 Transfer Case 1996
	5208 7821	1	ZJ		5.2 Engine w/7290 Series U-Joint (Up TO 8-9-93)
	5209 9156	1	ZJ		5.2 Engine w/1310 Series U-Joint (After 8-9-93)
	5209 8702	1	ZJ		5.2 Engine 1996

MODEL CODES:

72=2 DR Wagon
74=4 DR Wagon
77=Open Body 93" Whlbase
78=Open Body 103" Whlbase - Export
T=2WD
J,N=4WD
U=4WD (RHD)

BODY STYLES:

YJ=Wrangler (4X4) "S"
Weangler (4X4) SE
Wrangler (4X4) Sahara
Wrangler (4X4) Renegade
XJ=Cherokee SE
Cherokee Sport
Cherokee Country
ZJ=Grand Cherokee SE
Grand Cherokee Laredo
Grand Cherolee Limited
ZG=Grand Cherokee European
Y1=Wrangler
X1=Cherokee
Z1=Grand Cherokee
KDX=Vehicles

AR = Use as Required - = Non Illustrated Part P.A.R. = Paint as Required

PROPELLER SHAFT AND UNIVERSAL JOINT, REAR XJ, ZJ BODY
Figure 16-120

16-120A

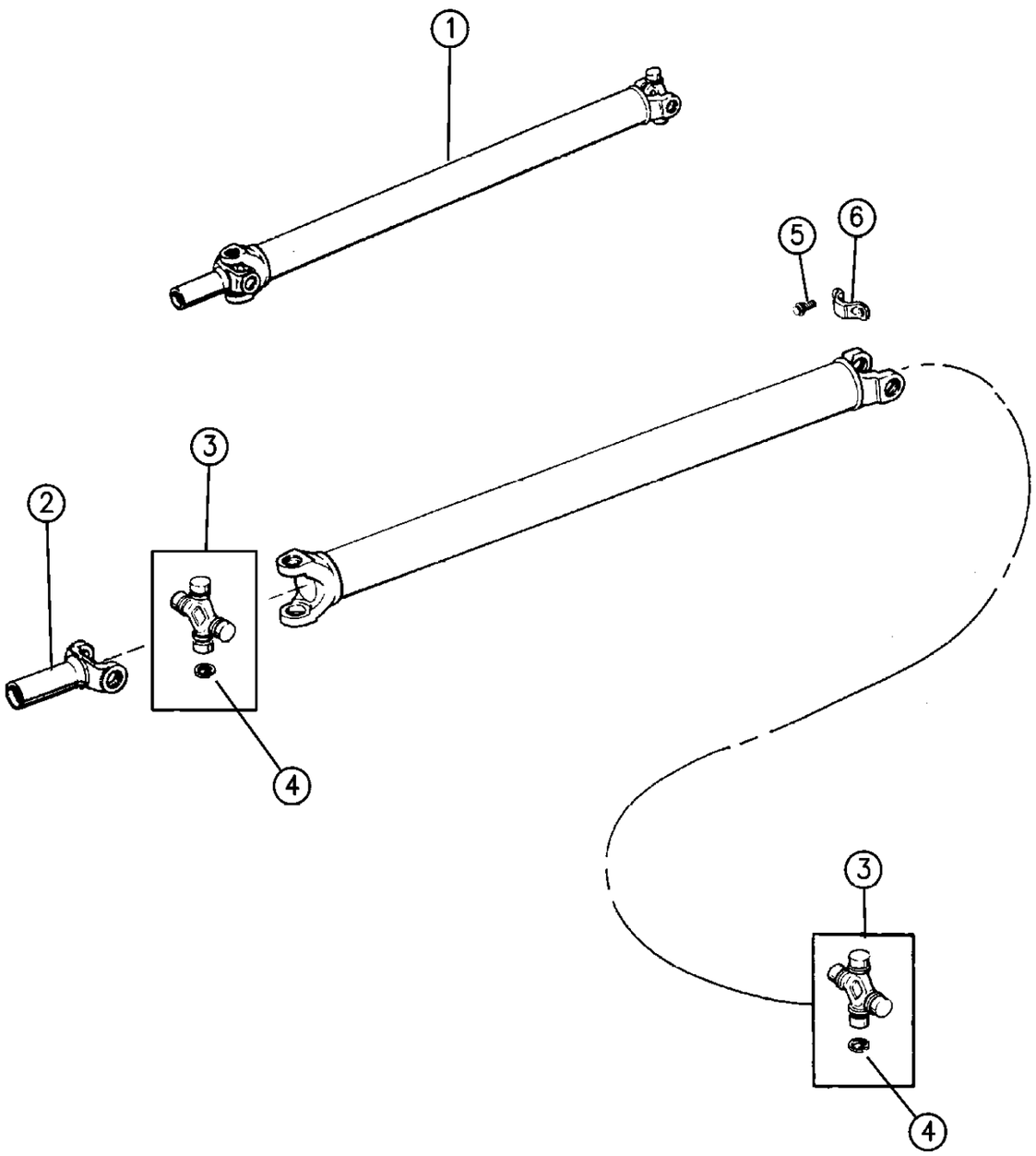

ITEM	PART NUMBER	QTY	BODY	MODEL	DESCRIPTION
2					YOKE, Slip
					TWO WHEEL DRIVE
	5300 1986	1	XJ		2.5 Eng., A904 Trans.
	5300 1987	1	XJ		2.5 Eng., Except A904 Trans.
	8350 3593	1	XJ		4.0 Eng. 1994-95
	4882 714	1	XJ		4.0 Eng. 1996
	8350 3574	1	ZJ		2.5,4.0L Eng., w/Man. Trans. (If Casting # is 52097898, Use #52097886)
	5209 7819	1	ZJ		4.0 Eng., Auto Trans., w/AW4 Trans.
	4384 586	1	ZJ		4.0 Eng., Auto Trans., w/A500SE Trans. (30 Spline)
	5209 7886	1	ZJ		5.2 Engine, Auto Trans. (27 Spline)
	8350 3574	1	ZJ		With Driveshaft #52099156
					FOUR WHEEL DRIVE
	8350 3574	1			1994-95
	4882 714	1			1996
3					PACKAGE, U-Joint
	4504 575	1			7260 series, use on front and rear of shaft 52087821 only
	4746 936				1330 series,used on rear of 52099412,52111071 shafts only
	4882 793				1310 series,used on all other applications
	4882 793	2		ZJ	Use w/Shaft numbers 52099156,52098904,52098164 ***
4	J320 7886	8			RING, Snap
5					BOLT
	J400 6928	1			.250-28x.620
	6503 407	1			M8x1.25x50.00
6	J324 0553	2			STRAP, Prop Shaft Att.

MODEL CODES:

72=2 DR Wagon
74=4 DR Wagon
77=Open Body 93" Whlbase
78=Open Body 103" Whlbase - Export
T=2WD
J,N=4WD
U=4WD (RHD)

BODY STYLES:

YJ=Wrangler (4X4) "S"
Weangler (4X4) SE
Wrangler (4X4) Sahara
Wrangler (4X4) Renegade
XJ=Cherokee SE
Cherokee Sport
Cherokee Country
ZJ=Grand Cherokee SE
Grand Cherokee Laredo
Grand Cherolee Limited
ZG=Grand Cherokee European
Y1=Wrangler
X1=Cherokee
Z1=Grand Cherokee
KDX=Vehicles

AR = Use as Required - = Non Illustrated Part P.A.R. = Paint as Required

SAGIPARTS

GROUP-17
REAR SUSPENSION

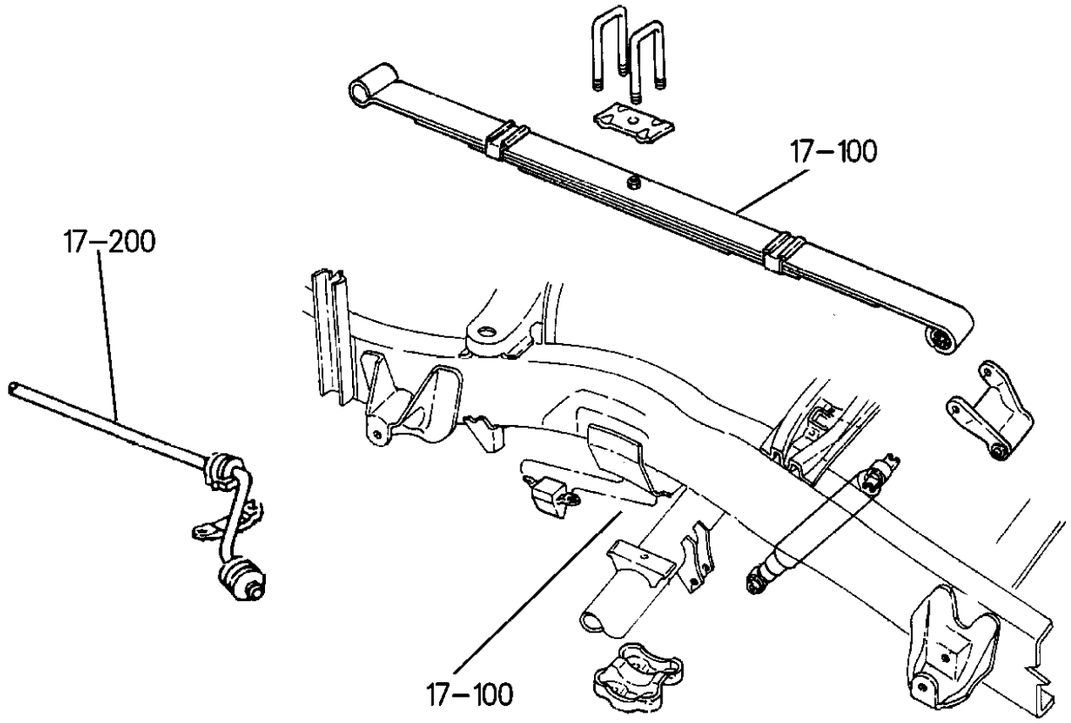

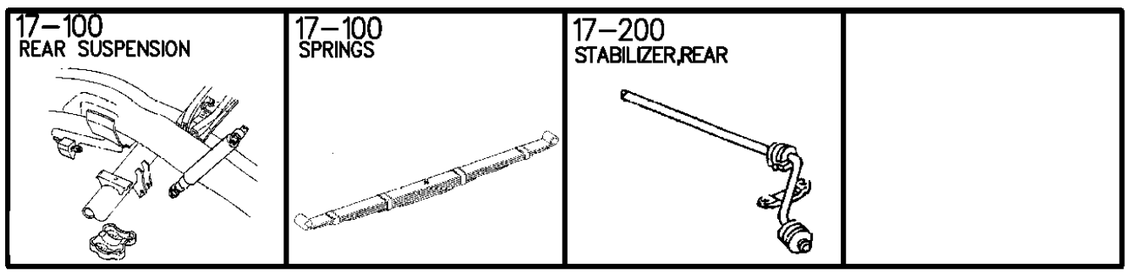

GROUP 17 - REAR SUSPENSION

ILLUSTRATION TITLE **GROUP-FIG. NO.**

REAR SUSPENSION

SUSPENSION, REAR W/SHOCK ABSORBER WRANGLER, (YJ) . . . . . Fig. 17-110
SUSPENSION, REAR W/SHOCK ABSORBER CHEROKEE . . . . . Fig. 17-120
SUSPENSION, REAR W/SHOCK ABSORBER GRAND CHEROKEE (ZJ) . . . . . Fig. 17-130

REAR STABLIZER

STABILZER, REAR GRAND CHEROKEE (ZJ) . . . . . Fig. 17-210

SUSPENSION, REAR W/SHOCK ABSORBER WRANGLER, (YJ)
Figure 17-110

17-110

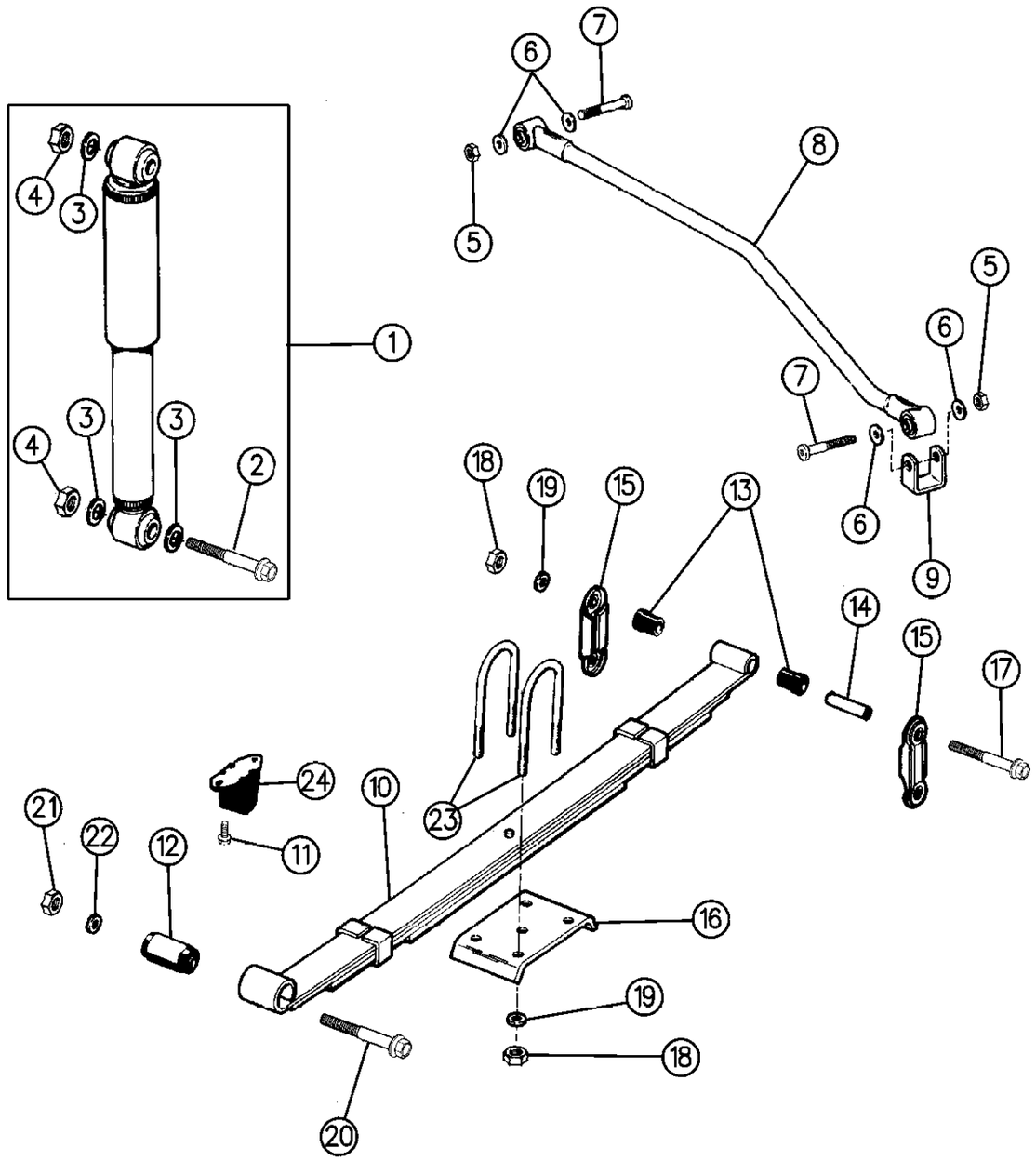

ITEM	PART NUMBER	QTY	BODY	MODEL	DESCRIPTION
1					SHOCK ABSORBER
	8350 2867	2			w/Std. Susp.
	4638 207	2			w/Std. Susp. w/EGYPT
	8350 2837	2			w/H.D. Susp., Gas Charged, Off Road Pkg.(w/Boot Stamped 52002554)
2	J018 1709	2			BOLT
3	J448 8495	6			WASHER
4	J400 4311	4			NUT
5		4			NUT, M12x1.75-6H (Not Serv.)
6	J448 8495	10			WASHER
7	6502 248	3			BOLT
8	5204 0404	1			BAR, Track Rear
9					SPACER
	5200 1989	2			1994
	5208 7976	2			1995
10					SPRING ASSEMBLY ***
	5200 3208	2			Standard Duty, w/Soft Top, 5 Leaf (RS)
	5200 3209	2			Standard Duty, w/Hard Top, 5 Leaf (RH)
	5200 2854	2			(Z02) KDX
	5200 3556	2			(Z04) KDX
	5200 2836	2			(Z05) KDX
	5200 3989	2			(Z06,7) KDX
	5200 3990	2			(Z08) KDX
11	J400 5063	4			SCREW
12	5200 2551	2			BUSHING
13	5200 2552	8			BUSHING
14	5200 2553	4			SPACER
15	5204 0415	4			PLATE, Shackle
16	5200 6421	2			PLATE, Rear Spring U-Bolt
	4030 938	AR			Shim,Spring to Axle,1 Degree,Right Side ***
	4030 939	AR			Shim,Spring to Axle,1 Degree,Left Side ***
17	J400 7393	4			BOLT
18	J400 4311	12			NUT
19	S012 0390	12			WASHER
20	J400 7547	2			BOLT
21	J400 3979	2			NUT
22	J400 6884	2			WASHER
23	5208 7823	4			U-BOLT
24	5200 2658	2			BUMPER

MODEL CODES:

72=2 DR Wagon
74=4 DR Wagon
77=Open Body 93" Whlbase
78=Open Body 103" Whlbase - Export
T=2WD
J,N=4WD
U=4WD (RHD)

BODY STYLES:

YJ=Wrangler (4X4) "S"
Weangler (4X4) SE
Wrangler (4X4) Sahara
Wrangler (4X4) Renegade
XJ=Cherokee SE
Cherokee Sport
Cherokee Country
ZJ=Grand Cherokee SE
Grand Cherokee Laredo
Grand Cherolee Limited
ZG=Grand Cherokee European
Y1=Wrangler
X1=Cherokee
Z1=Grand Cherokee
KDX=Vehicles

AR = Use as Required - = Non Illustrated Part P.A.R. = Paint as Required

« RETURN TO GROUP INDEX

SUSPENSION, REAR W/SHOCK ABSORBER CHEROKEE
Figure 17-120

17-120

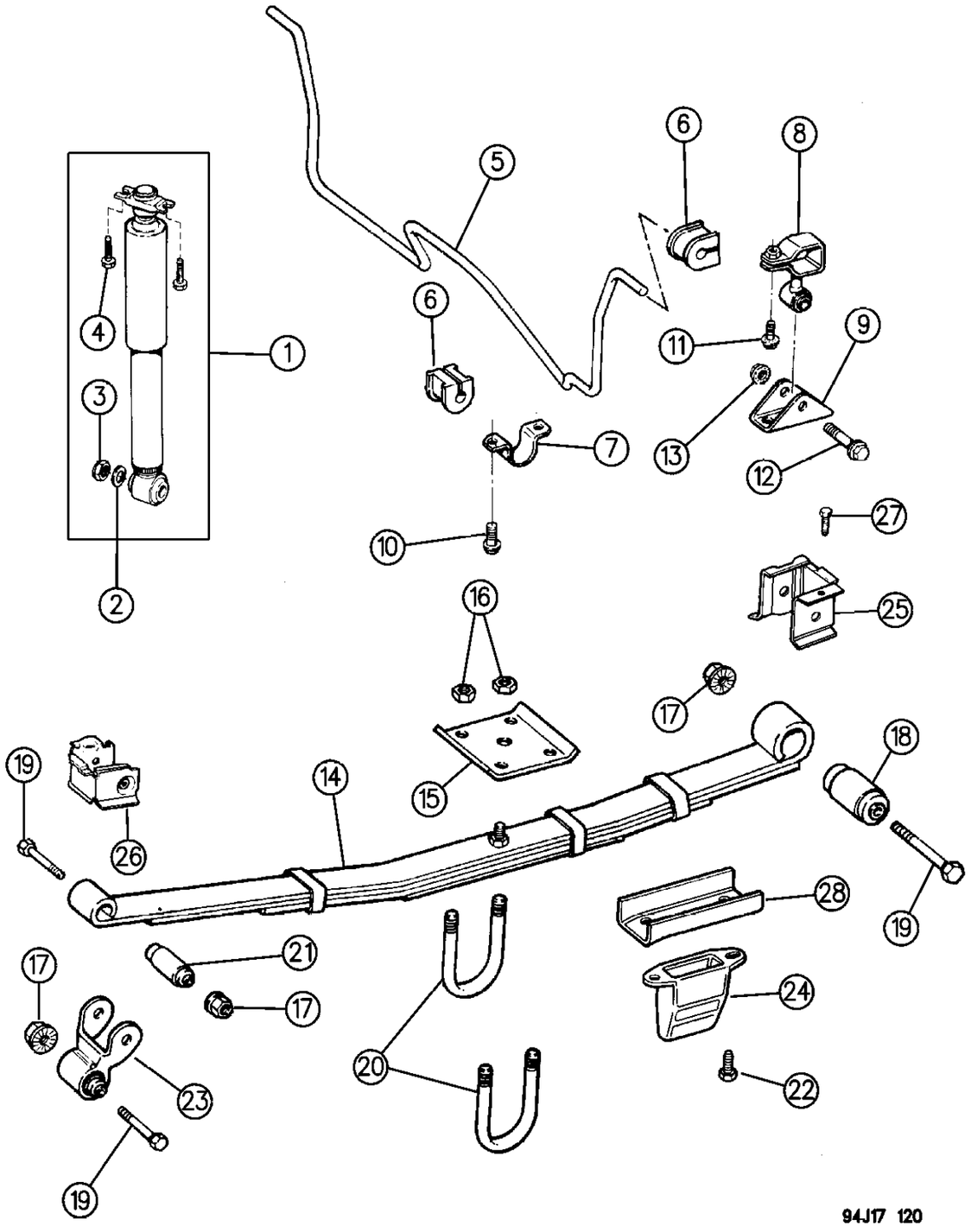

ITEM	PART NUMBER	QTY	BODY	MODEL	DESCRIPTION
1					SHOCK ABSORBER
	5208 7777	2			w/Std. Susp. (SDA)
	5208 7948	2			w/Special Sport (SGE and SDB)
	8350 4212	2			w/Extra Heavy Duty Susp. (SGD or SDU)
2	S012 0390	AR			WASHER
3	1150 0756	AR			NUT
4	J420 0089	4			SCREW
5	5200 1135	1			BAR, Stabilizer Rear
6	5200 1145	4			CUSHION, Stabilizer, Yellow
7	5200 1085	2			CLAMP
8	5200 1094	2			LINK
9	5200 6450	2			BRACKET, w/Dana Axle
	5208 7657	2			w/KDX
	5200 6450	2			w/8.25 Acustar Axle
10	3420 1321	4			BOLT
11	3420 1756	2			BOLT
12	1150 5098	2			BOLT
13	1150 2813	2			NUT
14					SPRING, Rear
	5200 0050	2			Std. Duty, Coded LB (#2157), w/(ZTS,ZFS)1994, (ZUS,ZFS) 1995-96
	5200 0051	2			Std. Duty, Coded LC, EC (#2424), w/(ZTT,ZFT)1994, (ZUT, ZFT)1995-96
	5200 0545	2			Std., Coded LL (#2424)w/(ZUT,ZGT)1994, (ZVT,ZGT)1995-96
	5200 0706	2			Std. Duty, Coded LN (#2961)w/(ZTU,ZFU)1994, (ZUU,ZFU) 1995-96
	5200 0544	2			H.D., Coded LK (#2157)w/(ZUS,ZGS)1994, (ZVS,ZGS)1995-96
	5200 0545	2			H.D., Coded LL (#2424)w/(ZUT,ZGT)1994, (ZVT,ZGT)1995-96
	5200 0707	2			H.D., Coded LM (#2691)w/(ZUU,ZGU)1994, (ZVU,ZGU)1995-96
	5200 2390	2			H.D., Coded LS (Off Road)w/(ZVV,ZGV)1994, (ZVV,ZGV)1995-96
	5200 2392	2			H.D., Coded LT (Off Road)w/(ZUW,ZGW)1994, (ZVW,ZGW) 1995-96
15	5200 6449	2			PLATE
16	1150 2813	8			NUT
17	1150 2814	6			NUT
18	5200 0503	2			BUSHING
19	3420 2118	6			BOLT
20	5200 6440	4			U-BOLT, (2 5/8) w/Dana Axle
	5200 4010	4			w/8.25 Chrysler Axle
21	5200 0504	2			BUSHING
22					SCREW

MODEL CODES:

72=2 DR Wagon
74=4 DR Wagon
77=Open Body 93" Whlbase
78=Open Body 103" Whlbase - Export
T=2WD
J,N=4WD
U=4WD (RHD)

BODY STYLES:

YJ=Wrangler (4X4) "S"
Weangler (4X4) SE
Wrangler (4X4) Sahara
Wrangler (4X4) Renegade
XJ=Cherokee SE
Cherokee Sport
Cherokee Country
ZJ=Grand Cherokee SE
Grand Cherokee Laredo
Grand Cherolee Limited
ZG=Grand Cherokee European
Y1=Wrangler
X1=Cherokee
Z1=Grand Cherokee
KDX=Vehicles

AR = Use as Required - = Non Illustrated Part P.A.R. = Paint as Required

SUSPENSION, REAR W/SHOCK ABSORBER CHEROKEE
Figure 17-120

17-120

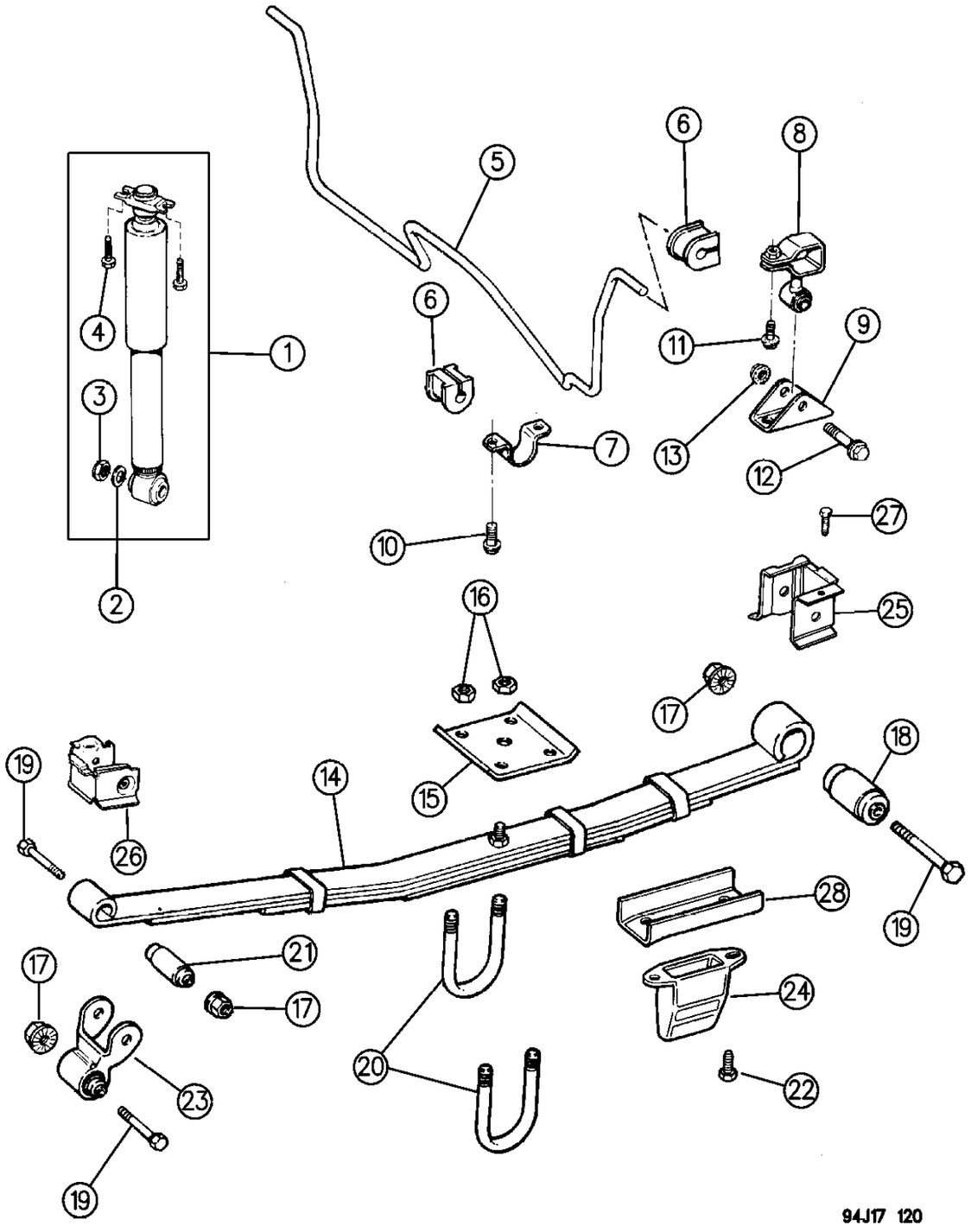

ITEM	PART NUMBER	QTY	BODY	MODEL	DESCRIPTION
	3420 1193	4			Length = 25mm
	3420 1771	4			Length = 30mm
	3420 1819	4			Length = 45mm
23	5200 0507	2			SHACKLE
24					BUMPER, Rear Axle Jounce
	5200 4297	2			Height = 74mm
	5200 2393	2			Height = 104mm
25	5500 1100-1	1			BRACKET
26	5500 1102-3	1			BRACKET
27	3420 1559	2			BOLT
28	5200 2386	2			REINFORCEMENT

MODEL CODES:

72=2 DR Wagon
74=4 DR Wagon
77=Open Body 93" Whlbase
78=Open Body 103" Whlbase - Export
T=2WD
J,N=4WD
U=4WD (RHD)

BODY STYLES:

YJ=Wrangler (4X4) "S"
Weangler (4X4) SE
Wrangler (4X4) Sahara
Wrangler (4X4) Renegade
XJ=Cherokee SE
Cherokee Sport
Cherokee Country
ZJ=Grand Cherokee SE
Grand Cherokee Laredo
Grand Cherolee Limited
ZG=Grand Cherokee European
Y1=Wrangler
X1=Cherokee
Z1=Grand Cherokee
KDX=Vehicles

AR = Use as Required - = Non Illustrated Part P.A.R. = Paint as Required

SUSPENSION, REAR W/SHOCK ABSORBER GRAND CHEROKEE (ZJ)
Figure 17-130

17-130B

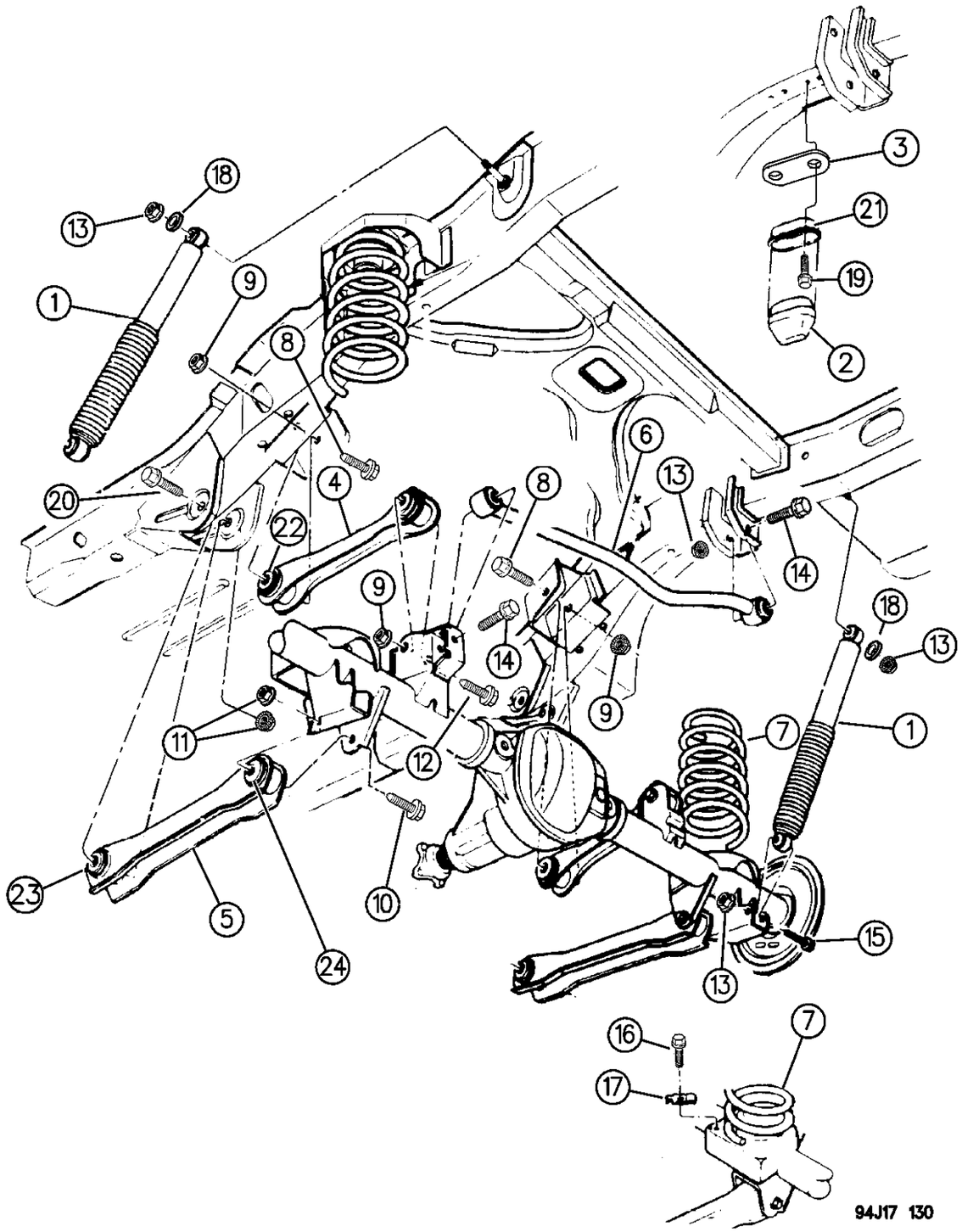

ITEM	PART NUMBER	QTY	BODY	MODEL	DESCRIPTION
1					SHOCK ABSORBER, Rear
	4723 036	2			w/Std. Susp., 1994
	5208 7901	2			w/Std. Susp., 1995
	5208 8164	2			w/Std. Susp., 1996
	5208 8465	2		ZG	w/Std. Susp., 1996 (RHD)
	4741 676	2			w/AWE (Up Country Pkg. or Off Road Pkg.), 1994
	5208 8202	2			w/AWE (Up Country Pkg. or Off Road Pkg.), 1995-96
2	5208 7639	2			BUMPER, Rear Jounce
3	5208 7675	2			SPACER, Jounce Bumper w/2WD or w/Awe (Up Country Pkg.)
4	5203 7551	2			ARM, Control Upper
5	5208 7716	2			ARM, Control Lower
-	5208 7720	2			BUSHING, Control Arm Front
-	5203 8026	2			BUSHING, Control Arm Rear
6					TRACK BAR, Rear
	5200 5642	1			w/LHD 1994-95
	5208 7968	1			w/LHD 1996
	5305 4177	1		ZG	w/RHD 1996
-	5201 8347	1			COVER, Track Bar Bracket
-	6030 441	1			SCREW, Track Bar Cover
7					SPRING, Rear Coil
	5208 8364	AR			w/Std. Susp. Coded (JE), (ZXR,ZJR)
	5208 9142	AR			w/Std. Susp. Coded (JF), (ZXS,ZJS)
	5208 9143	AR			w/Std. Susp. Coded (JG), (ZXT,ZJT)
	5208 9144	AR			w/H.D. Susp. Coded (JH), w/AWE (Up Country Susp. Pkg.), (ZXU,ZJU)
	5208 9145	AR			w/H.D. Susp. Coded (JJ), w/AWE (Up Country Susp. Pkg.), (ZXV,ZJV)
	5208 9201	AR			w/Std. Susp. Coded (DS), (ZSS,ZDS)
-	5203 7555	2			ISOLATOR, Spring Upper w/AWE (Up Country Susp. Pkg.)
-	5203 7555	1			Rt., w/o AWE (Up Country Susp. Pkg.)
-	5208 7671	1			Lt., w/o AWE (Up Country Susp. Pkg.)
8	6503 085	2			BOLT, M10x1.5x8.20
-	4778 402	1			CAM PACKAGE, Rear Drive Pinion Alignment ***
9	6502 696	4			NUT, M10x1.5
10	6502 470	2			BOLT, M14x2.0x110.0
11	6502 698	4			NUT, M14x2.0
12	6502 469	2			SCREW, M10x1.50x75.00
13	6502 697	5			NUT, M12x1.75
14	6502 883	2			SCREW, M12x1.75x80.00
15	6502 473	2			BOLT, M12x1.75x65.00
16	6502 468	2			BOLT, M8x1.25x20.00
17	5200 5917	2			BRACKET, Spring Holddown

MODEL CODES:

72=2 DR Wagon
74=4 DR Wagon
77=Open Body 93" Whlbase
78=Open Body 103" Whlbase - Export
T=2WD
J,N=4WD
U=4WD (RHD)

BODY STYLES:

YJ=Wrangler (4X4) "S"
Weangler (4X4) SE
Wrangler (4X4) Sahara
Wrangler (4X4) Renegade
XJ=Cherokee SE
Cherokee Sport
Cherokee Country
ZJ=Grand Cherokee SE
Grand Cherokee Laredo
Grand Cherolee Limited
ZG=Grand Cherokee European
Y1=Wrangler
X1=Cherokee
Z1=Grand Cherokee
KDX=Vehicles

AR = Use as Required - = Non Illustrated Part P.A.R. = Paint as Required

SUSPENSION, REAR W/SHOCK ABSORBER GRAND CHEROKEE (ZJ)
Figure 17-130

17-130B

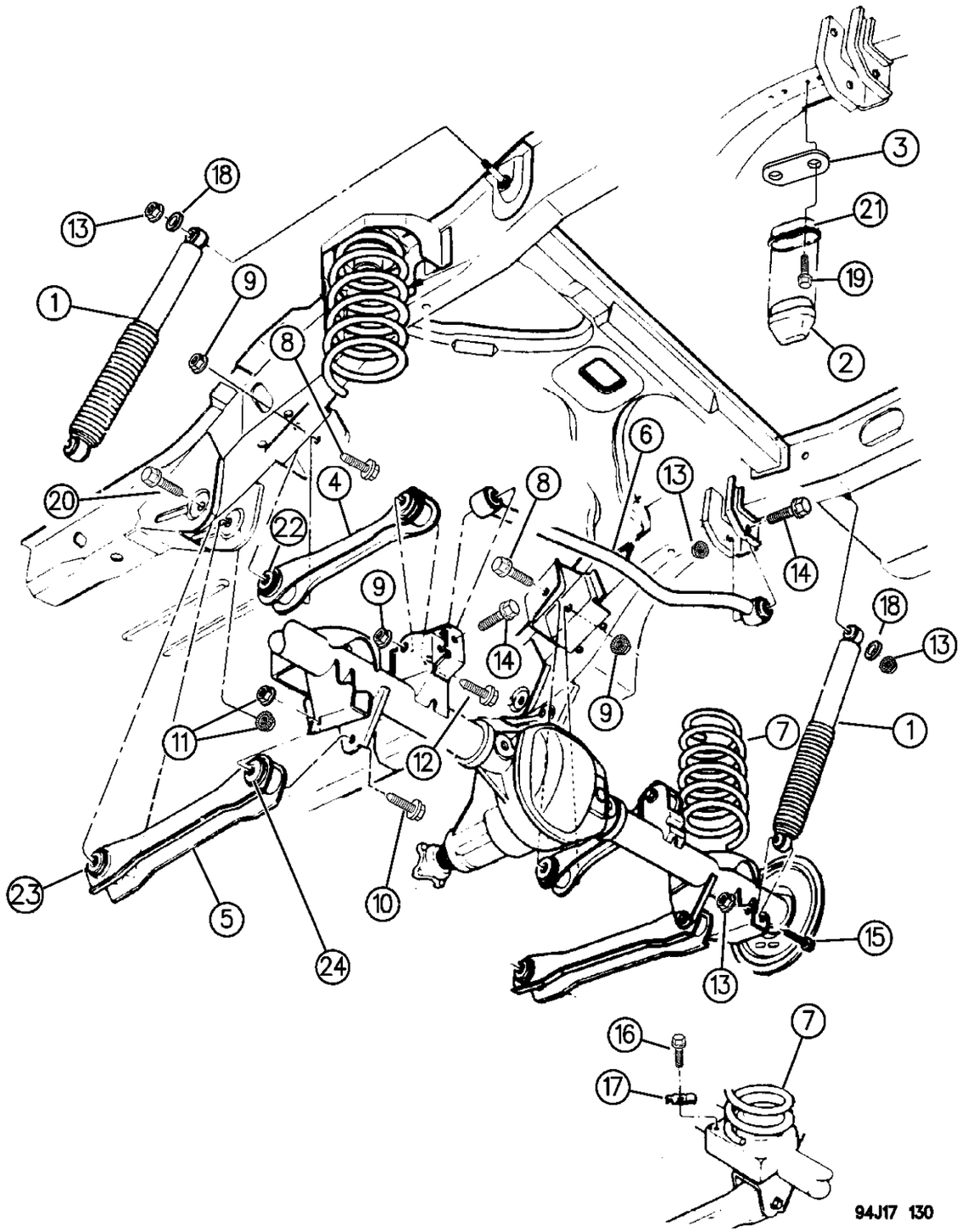

ITEM	PART NUMBER	QTY	BODY	MODEL	DESCRIPTION
18		2			WASHER, M12x3.0x3.5 (Not Serv.)
19					BOLT
	6502 656	4			w/2WD, M8x1.25x30.00
	6502 657	4			w/4WD, M8x1.25x45.00
20	6502 963	2			BOLT
21	5208 7638	2			CUP, Jounce Bumper Rear
22	5203 8020	4			BUSHING, Control Arm Upper
23	5203 8026	4			BUSHING, Control Arm Lower
24	5203 8026	2			BUSHING, Control Arm Lower, Rear

MODEL CODES:

72=2 DR Wagon
74=4 DR Wagon
77=Open Body 93" Whlbase
78=Open Body 103" Whlbase - Export
T=2WD
J,N=4WD
U=4WD (RHD)

BODY STYLES:

YJ=Wrangler (4X4) "S"
Weangler (4X4) SE
Wrangler (4X4) Sahara
Wrangler (4X4) Renegade

XJ=Cherokee SE
Cherokee Sport
Cherokee Country

ZJ=Grand Cherokee SE
Grand Cherokee Laredo
Grand Cherolee Limited
ZG=Grand Cherokee European

Y1=Wrangler
X1=Cherokee
Z1=Grand Cherokee
KDX=Vehicles

AR = Use as Required - = Non Illustrated Part P.A.R. = Paint as Required

STABILZER, REAR GRAND CHEROKEE (ZJ)
Figure 17-210

17–210

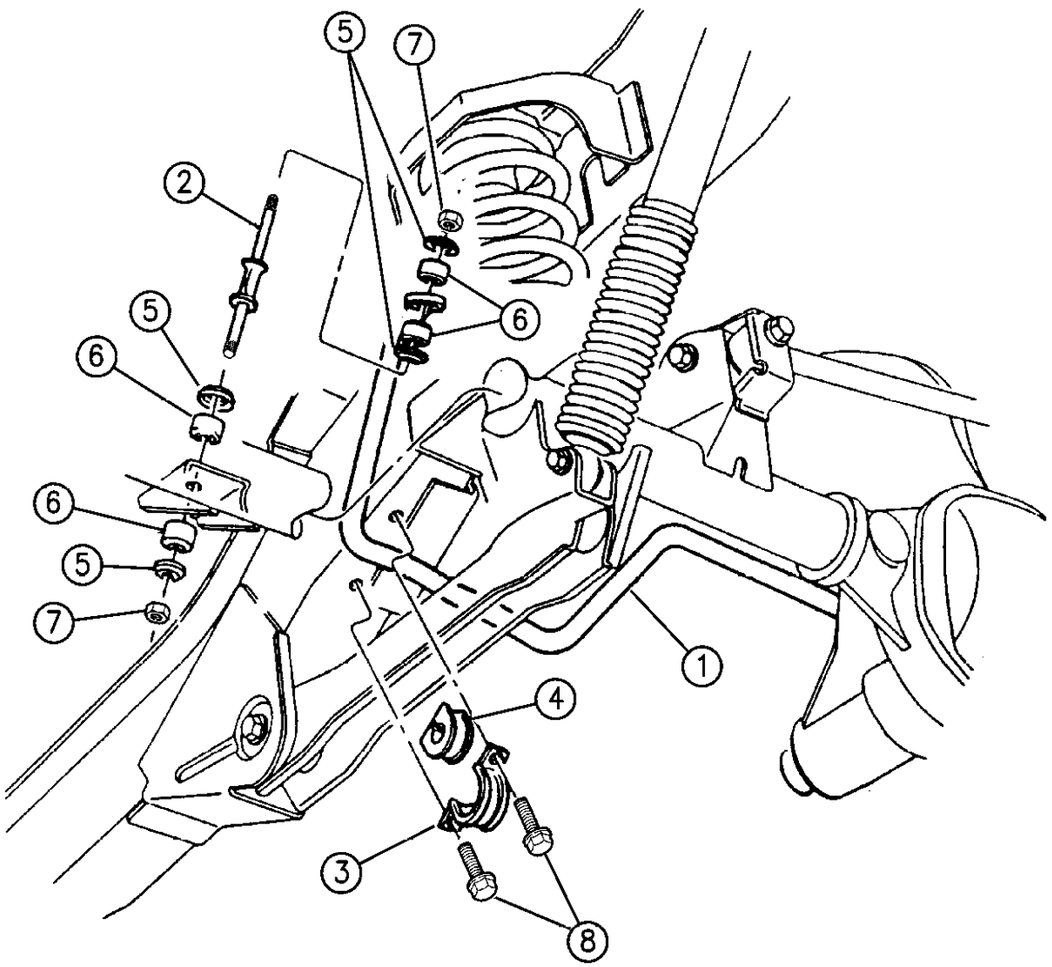

94J17 210

ITEM	PART NUMBER	QTY	BODY	MODEL	DESCRIPTION
1	5200 5635	1			BAR, Rear Stabilizer 16mm
2	5200 5638	2			LINK, Stabilizer Bar
3	5200 5654	2			CLAMP, Stabilizer Bar
4	5200 6289	2			BUSHING, Rear Bar 15.4mm Dia.
5	5208 7668	8			RETAINER, Rear
6	5200 1132	8			GROMMET, Rear
7	6101 687	2			NUT, M10x1.5
8	6502 467	4			BOLT, w/Washer

MODEL CODES:

72=2 DR Wagon
74=4 DR Wagon
77=Open Body 93" Whlbase
78=Open Body 103" Whlbase - Export
T=2WD
J,N=4WD
U=4WD (RHD)

BODY STYLES:

YJ=Wrangler (4X4) "S"
Weangler (4X4) SE
Wrangler (4X4) Sahara
Wrangler (4X4) Renegade

XJ=Cherokee SE
Cherokee Sport
Cherokee Country

ZJ=Grand Cherokee SE
Grand Cherokee Laredo
Grand Cherolee Limited
ZG=Grand Cherokee European

Y1=Wrangler
X1=Cherokee
Z1=Grand Cherokee
KDX=Vehicles

AR = Use as Required - = Non Illustrated Part P.A.R. = Paint as Required

SAGIPARTS

GROUP-19
STEERING

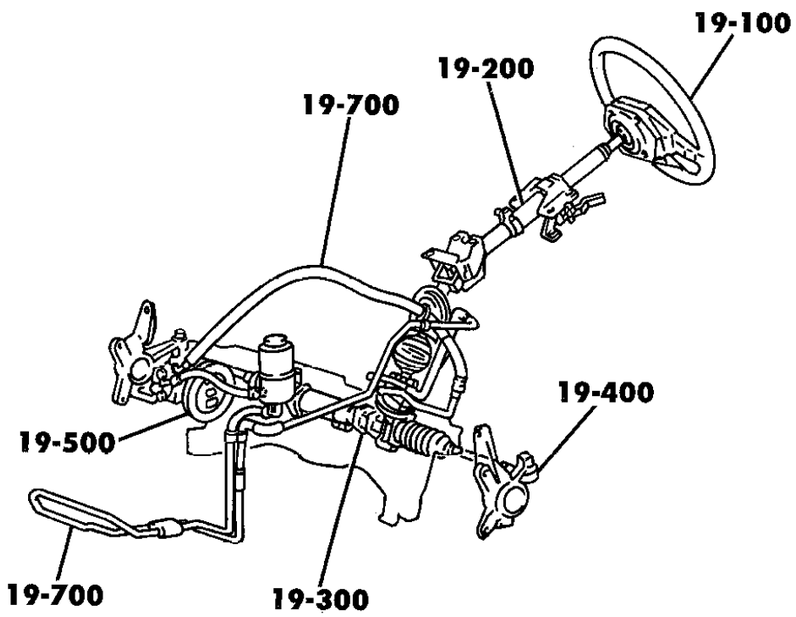

19-100 STEERING WHEEL	**19-200** STRG. COLUMN & COVER 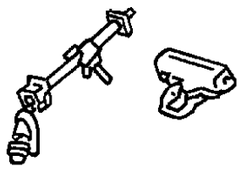	**19-300** STEERING GEAR 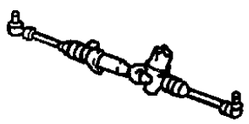	**19-400** STEERING LINKAGE & TIE ROD ENDS 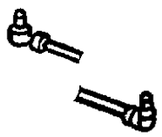
19-500 PWR. STEERING PUMP & MOUNTING 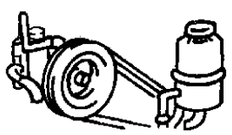	**19-700** POWER STEERING LINES & HOSES		

GROUP 19 - STEERING

ILLUSTRATION TITLE — **GROUP-FIG. NO.**

STEERING WHEELS
WHEEL, STEERING WRANGLER, (YJ) . . . . . Fig. 19-110
WHEEL, STEERING CHEROKEE (1994) . . . . . Fig. 19-120
WHEEL, STEERING CHEROKEE (1995-96) . . . . . Fig. 19-125
WHEEL, STEERING GRAND CHEROKEE (ZJ) 1994-95 . . . . . Fig. 19-130
WHEEL, STEERING GRAND CHEROKEE (ZJ) 1996 . . . . . Fig. 19-140

STEERING COLUMNS
COLUMN ASSEMBLY, STEERING WRANGLER, (YJ) . . . . . Fig. 19-205
HOUSING STEERING COLUMN UPPER W/FLOOR GEAR SHIFT, W/O TILT WRANGLER, YJ . . . . . Fig. 19-210
HOUSING STEERING COLUMN LOWER W/FLOOR GEAR SHIFT, W/O TILT WRANGLER, (YJ) . . . . . Fig. 19-215
HOUSING STEERING COLUMN UPPER W/FLOOR GEAR SHIFT, W/TILT WRANGLER, (YJ) . . . . . Fig. 19-220
HOUSING STEERING COLUMN LOWER W/FLOOR GEAR SHIFT, W/TILT WRANGLER, (YJ) . . . . . Fig. 19-225
HOUSING STEERING COLUMN UPPER W/COLUMN GEAR SHIFT, W/TILT WRANGLER, (YJ) . . . . . Fig. 19-230
HOUSING STEERING COLUMN LOWER W/COLUMN GEAR SHIFT, W/TILT WRANGLER, (YJ) . . . . . Fig. 19-235
COLUMN ASSEMBLY, STEERING W/FLOOR MOUNTED GEAR SHIFT CHEROKEE (1994) . . . . . Fig. 19-240
HOUSING STEERING COLUMN UPPER W/FLOOR GEAR SHIFT, W/O TILT CHEROKEE (1994) . . . . . Fig. 19-245
HOUSING STEERING COLUMN LOWER W/FLOOR GEAR SHIFT, W/O TILT CHEROKEE (1994) . . . . . Fig. 19-250
HOUSING STEERING COLUMN UPPER W/FLOOR GEAR SHIFT, W/TILT CHEROKEE (1994) . . . . . Fig. 19-255
HOUSING STEERING COLUMN LOWER W/FLOOR GEAR SHIFT, W/TILT CHEROKEE (1994) . . . . . Fig. 19-260
COLUMN ASSEMBLY, STEERING W/COLUMN GEAR SHIFT CHEROKEE (1994) . . . . . Fig. 19-265
HOUSING STEERING COLUMN UPPER W/COLUMN GEAR SHIFT, W/TILT CHEROKEE (1994) . . . . . Fig. 19-270
HOUSING STEERING COLUMN LOWER W/COLUMN GEAR SHIFT, W/TILT CHEROKEE (1994) . . . . . Fig. 19-275
COLUMN, STEERING UPPER AND LOWER CHEROKEE (1995-96) . . . . . Fig. 19-278
COLUMN, STEERING UPPER AND LOWER GRAND CHEROKEE (ZJ) . . . . . Fig. 19-280

STEERING GEARS
GEAR, STEERING W/O POWER STEERING WRANGLER (YJ) . . . . . Fig. 19-310
GEAR, POWER STEERING WRANGLER, CHEROKEE, GRAND CHEROKEE (ZJ) . . . . . Fig. 19-320

STEERING LINKAGE
LINKAGE AND DAMPER WRANGLER (YJ) . . . . . Fig. 19-410
LINKAGE AND DAMPER CHEROKEE . . . . . Fig. 19-420
LINKAGE AND DAMPER GRAND CHEROKEE (ZJ) . . . . . Fig. 19-430

POWER STEERING PUMPS
PUMP, POWER STEERING WRANGLER, CHEROKEE GRAND CHEROKEE (ZJ) . . . . . Fig. 19-510
PUMP, POWER STEERING 2.1L DIESEL ENGINE, 1994 CHEROKEE . . . . . Fig. 19-520
PUMP, POWER STEERING 2.5L DIESEL ENGINE, 1995-96 CHEROKEE, GRAND CHEROKEE . . . . . Fig. 19-525
PUMP MOUNTING, POWER STEERING WRANGLER, CHEROKEE,GRAND CHEROKEE (ZJ) . . . . . Fig. 19-530
PUMP MOUNTING POWER STEERING, 2.1L DIESEL ENG., 1994 CHEROKEE . . . . . Fig. 19-540
PUMP MOUNTING POWER STEERING, 2.5L DIESEL ENG., 1995-96 CHEROKEE, GRAND CHEROKEE . . . Fig. 19-545

ILLUSTRATION TITLE	GROUP-FIG. NO.
POWER STEERING PUMPS (Continued)	
PUMP MOUNTING POWER STEERING, 2.5L DIESEL ENG., 1995-96 CHEROKEE, GRAND CHEROKEE . . .	Fig. 19-545
POWER STEERING HOSES	
HOSES AND RESERVOIR, POWER STEERING WRANGLER (YJ)	Fig. 19-710
HOSES AND RESERVOIR, POWER STEERING CHEROKEE, GRAND CHEROKEE (ZJ)	Fig. 19-720

WHEEL, STEERING WRANGLER, (YJ)
Figure 19-110

19–110

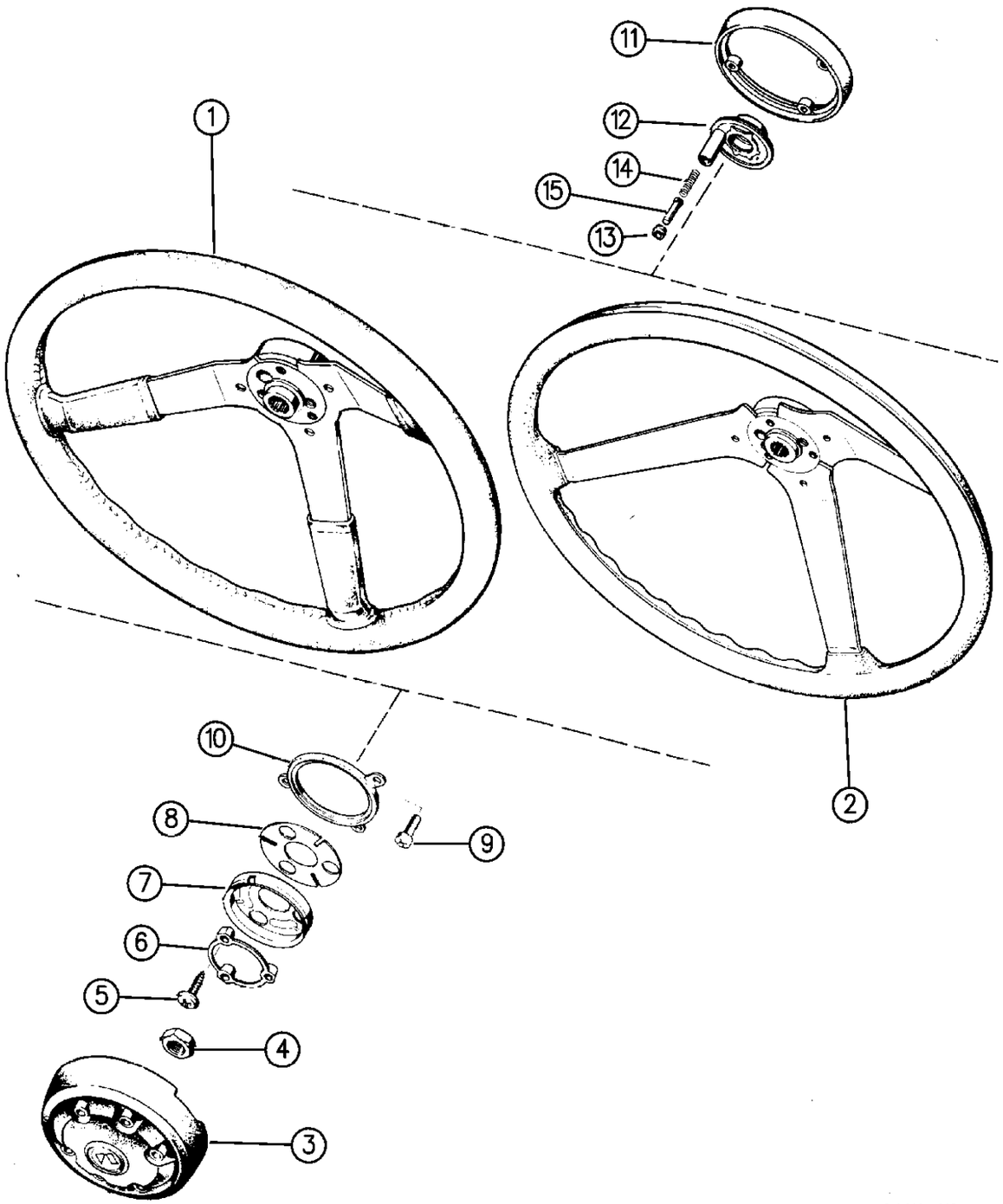

ITEM	PART NUMBER	QTY	BODY	MODEL	DESCRIPTION
1					WHEEL, Steering - Leather Wrapped
	5BA7 6KXA	1			Cinder, (Black/Silver)
	5BA7 6LTB	1			Spice
2					WHEEL, Steering - Soft Feel Sport
	5AC0 6KXA	1			Cinder, (Black/Silver)
3					BUTTON, Steering Wheel
	5BL2 0KXA	1			Cinder, (Black/Silver)
	5BL2 0LTB	1			Spice
4	J420 0414	1			NUT
5	J400 4167	3			SCREW
6	J318 6964	1			BUSHING
7	J324 2217	1			RECEIVER
8	J318 6965	1			SPRING
9	J812 2359	3			SCREW
10	J321 3915	1			INSULATOR
11	J321 8276	1			EXTENTION (Dealer Paint) ***
12					CAM, Cancelling
	J448 7711	1			w/o Tilt Wheel
	J448 7816	1			w/Tilt Wheel
13	J318 7257	1			RETAINER
14	5200 4402	1			SPRING
15	5203 8366	1			PIN

MODEL CODES:

72=2 DR Wagon
74=4 DR Wagon
77=Open Body 93" Whlbase
78=Open Body 103" Whlbase - Export
T=2WD
J,N=4WD
U=4WD (RHD)

BODY STYLES:

YJ=Wrangler (4X4) "S"
Weangler (4X4) SE
Wrangler (4X4) Sahara
Wrangler (4X4) Renegade

XJ=Cherokee SE
Cherokee Sport
Cherokee Country

ZJ=Grand Cherokee SE
Grand Cherokee Laredo
Grand Cherolee Limited
ZG=Grand Cherokee European

Y1=Wrangler
X1=Cherokee
Z1=Grand Cherokee
KDX=Vehicles

AR = Use as Required - = Non Illustrated Part P.A.R. = Paint as Required

« RETURN TO GROUP INDEX

WHEEL, STEERING CHEROKEE (1994)
Figure 19-120

19–120

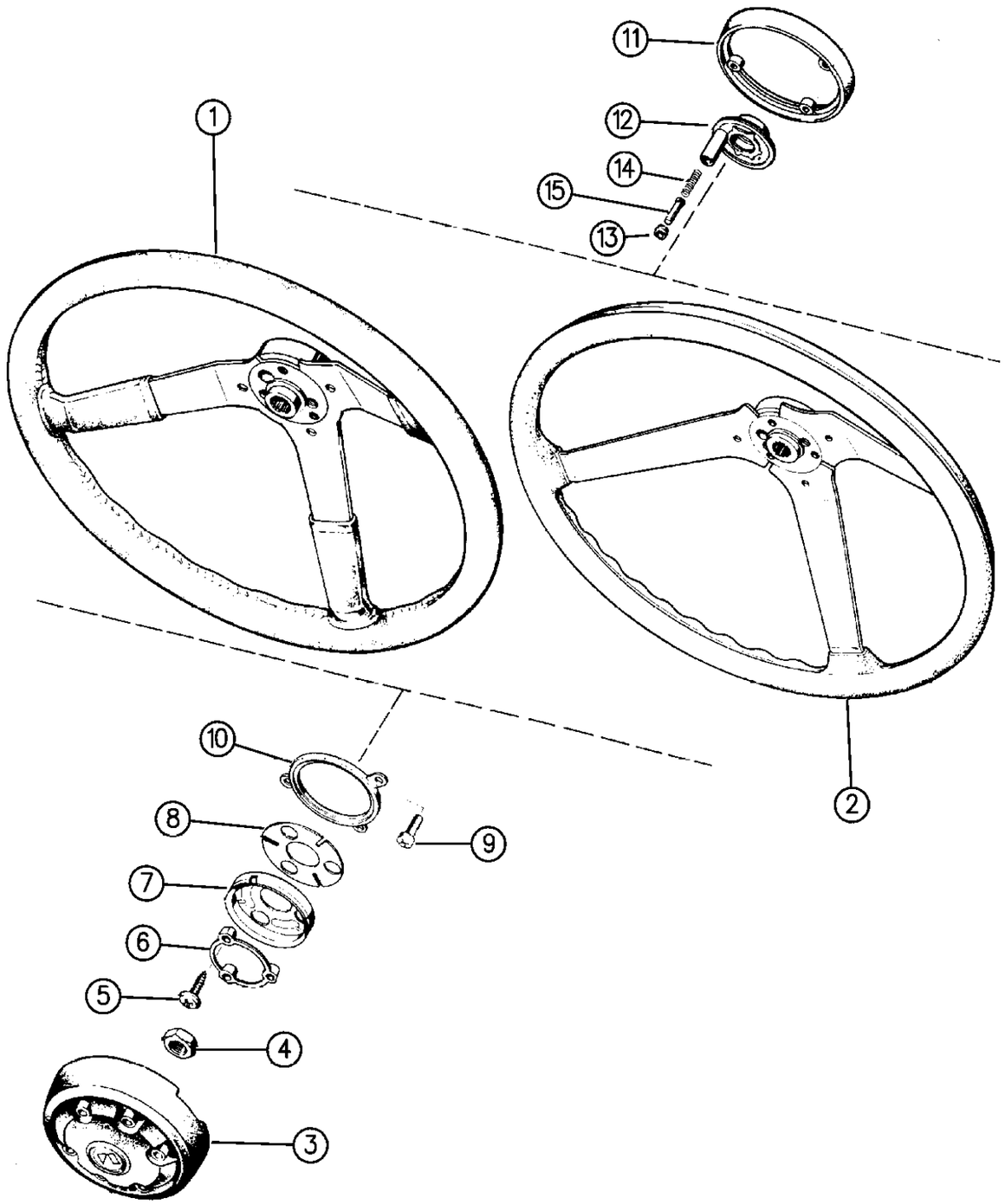

ITEM	PART NUMBER	QTY	BODY	MODEL	DESCRIPTION
1					WHEEL, Steering - Leather Wrapped
	5BA7 6JA8	1			Charcoal
	5BA7 6JY6	1			Dark Sand
2					WHEEL, Steering - Soft Feel Sport
	5AC0 6KX9	1			Black
3					CAP, Steering Wheel
	5BL2 0KA8	1			Charcoal
	5BL2 0KY6	1			Dark Sand
	5BL2 0KX9	1			Black
4	J420 0414	1			NUT
5	J400 4167	3			SCREW
6	J318 6964	1			BUSHING
7	J324 2217	1			RECEIVER
8	J318 6965	1			SPRING
9	J812 2359	3			SCREW
10	J321 3915	1			INSULATOR
11	J321 8276	1			EXTENTION, (Dealer Paint) ***
12					CAM, Cancelling
	J448 7711	1			w/o Tilt Wheel
	J448 7816	1			w/Tilt Wheel
13	J318 7257	1			RETAINER
14	5200 4402	1			SPRING
15	5203 8366	1			PIN

MODEL CODES:

72=2 DR Wagon
74=4 DR Wagon
77=Open Body 93" Whlbase
78=Open Body 103" Whlbase - Export
T=2WD
J,N=4WD
U=4WD (RHD)

BODY STYLES:

YJ=Wrangler (4X4) "S"
Weangler (4X4) SE
Wrangler (4X4) Sahara
Wrangler (4X4) Renegade
XJ=Cherokee SE
Cherokee Sport
Cherokee Country
ZJ=Grand Cherokee SE
Grand Cherokee Laredo
Grand Cherolee Limited
ZG=Grand Cherokee European
Y1=Wrangler
X1=Cherokee
Z1=Grand Cherokee
KDX=Vehicles

AR = Use as Required - = Non Illustrated Part P.A.R. = Paint as Required

« RETURN TO GROUP INDEX

WHEEL, STEERING CHEROKEE (1995-96)
Figure 19-125

19-125A

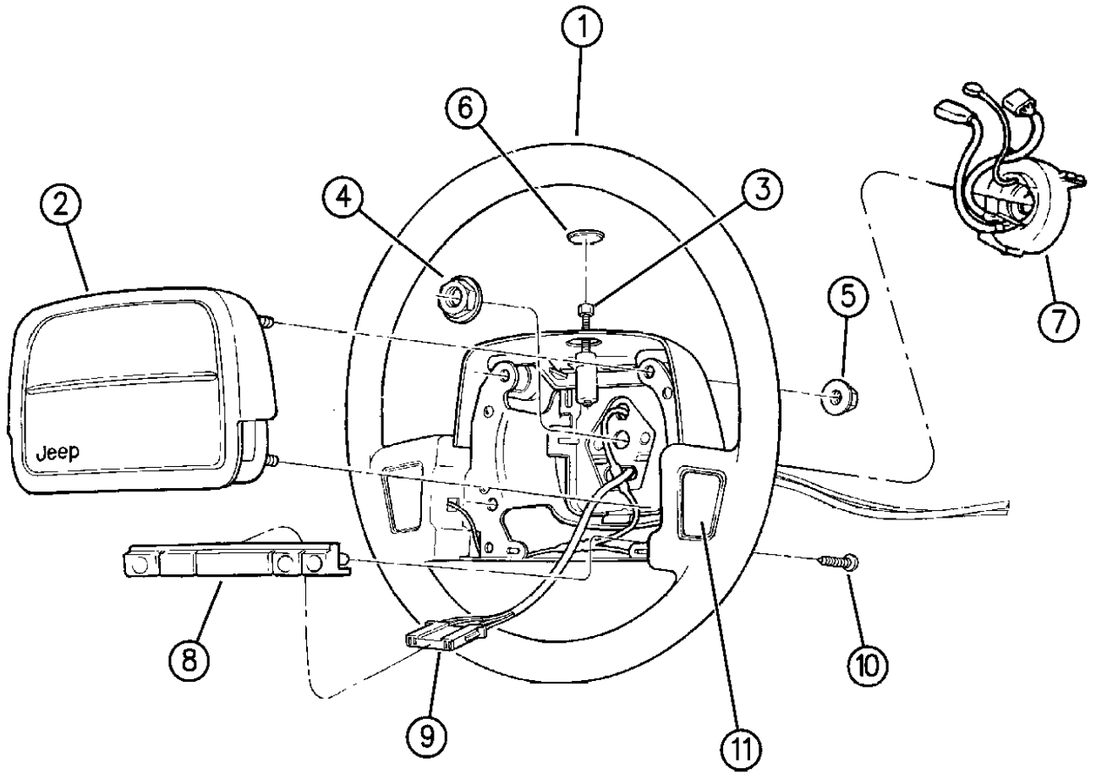

94J19 125

ITEM	PART NUMBER	QTY	BODY	MODEL	DESCRIPTION
1					WHEEL, Steering
	5DP0 4RX8	1			w/Air Bag, w/o Leather Wrap(Black)
	5DP0 5RX9	1			w/Air Bag, w/Leather Wrap, (Black)
	5DX0 8RX8	1		X1	w/o Air Bag, w/o Leather Wrap, KDX (Black)
	WM23 LX8	1		X1	w/Air Bag, w/o Leather Wrap, KDX (Black)
	5DX0 9RX9	1		X1	w/o Air Bag, w/Leather Wrap, KDX w/EUROPE Horn Button (Black)
	EL43 LX9	1		X1	w/o Air Bag, w/Leather Wrap, KDX w/o EUROPE Horn Button (Black)
2					AIR BAG, Module (Mechanical) ***
	5DM3 5RX8	1			w/Air Bag,(Black)
	FK19 KX9	1			w/o Air Bag (Black)
3		1			SCREW, Air Bag Module Arming (Serv. in Wheel)
4	6500 906	1			NUT
5	6500 274	4			NUT, w/Washer M6x1.00
6	5DV5 6RX9	1			CAP, Arming Screw Cover (Black)
7					CLOCKSPRING PACKAGE ***
	4688 554	1			w/o Speed Control 1995
	5600 7522	1			w/o Speed Control 1996
	4688 655	1			w/Speed Control 1995
	5600 7621	1			w/Speed Control 1996
8					BAR, Trim
	4470 022	1			w/o Speed Control
					SWITCH, w/Speed Control
	5600 7066	1			1995
	5600 7712	1			1996
9		1			TERMINAL, (See Grp. 8)
10	6032 452	2			SCREW, .164-15x.625
-	WK94 LX8	AR			PLUG, Horn Pad Screw Cover
11					BUTTON PACKAGE, Horn
	4762 818	1			(Black)

MODEL CODES:

72=2 DR Wagon
74=4 DR Wagon
77=Open Body 93" Whlbase
78=Open Body 103" Whlbase - Export
T=2WD
J,N=4WD
U=4WD (RHD)

BODY STYLES:

YJ=Wrangler (4X4) "S"
Weangler (4X4) SE
Wrangler (4X4) Sahara
Wrangler (4X4) Renegade
XJ=Cherokee SE
Cherokee Sport
Cherokee Country
ZJ=Grand Cherokee SE
Grand Cherokee Laredo
Grand Cherolee Limited
ZG=Grand Cherokee European
Y1=Wrangler
X1=Cherokee
Z1=Grand Cherokee
KDX=Vehicles

AR = Use as Required - = Non Illustrated Part P.A.R. = Paint as Required

« RETURN TO GROUP INDEX

WHEEL, STEERING GRAND CHEROKEE (ZJ) 1994-95
Figure 19-130

19–130

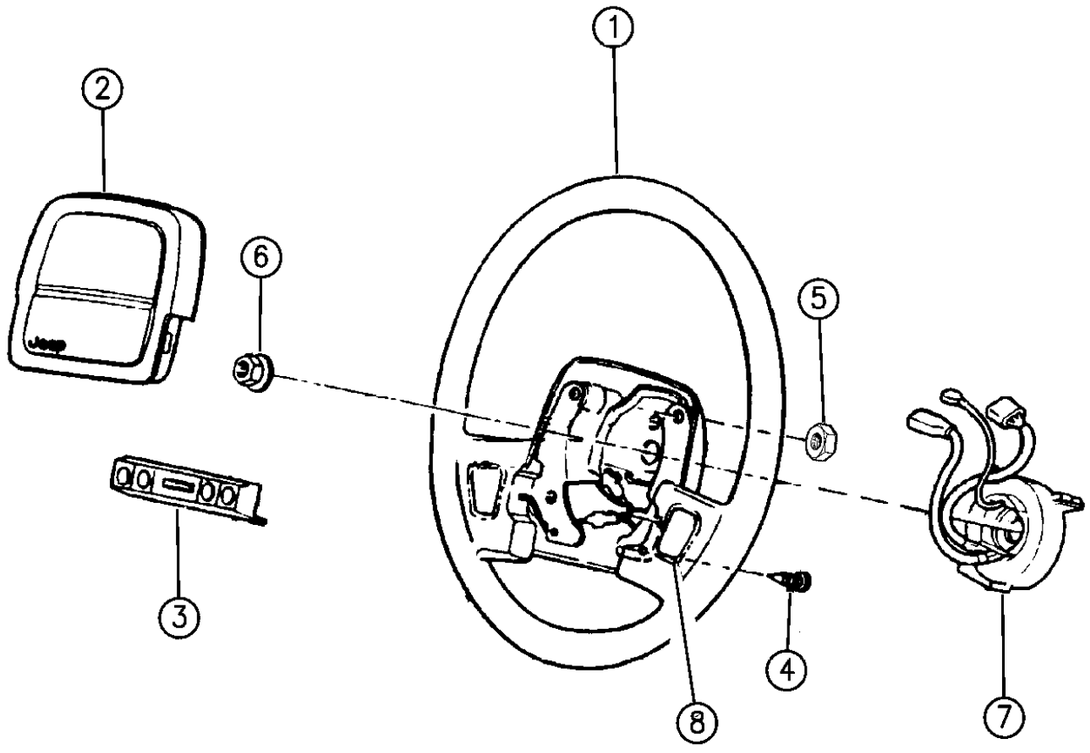

94J19 130

ITEM	PART NUMBER	QTY	BODY	MODEL	DESCRIPTION
1					WHEEL, Steering
	WM23 LX8	1			Black, w/o Leather
	5DE6 4LX9	1			Black, w/Leather 1994-95
2					MODULE, Air Bag
	5DV0 1MX8	1			Black
3	4470 022	1			BAR, Trim
	5600 7066	1			SWITCH, w/Speed Control
4		2			SCREW, #8 (Not Serv.)
-	WK94 LX8	AR			PLUG, Horn Pad Screw Cover
5	6500 274	4			NUT, w/Washer
6	6500 906	1			NUT, w/Washer
7					CLOCKSPRING PACKAGE ***
	4637 953	1			w/o Tilt, w/o Speed Control
	5600 7411	1			w/Tilt, w/Speed Control
8	4762 818	1			BUTTON PACKAGE

MODEL CODES:

72=2 DR Wagon
74=4 DR Wagon
77=Open Body 93" Whlbase
78=Open Body 103" Whlbase - Export
T=2WD
J,N=4WD
U=4WD (RHD)

BODY STYLES:

YJ=Wrangler (4X4) "S"
Weangler (4X4) SE
Wrangler (4X4) Sahara
Wrangler (4X4) Renegade
XJ=Cherokee SE
Cherokee Sport
Cherokee Country
ZJ=Grand Cherokee SE
Grand Cherokee Laredo
Grand Cherolee Limited
ZG=Grand Cherokee European
Y1=Wrangler
X1=Cherokee
Z1=Grand Cherokee
KDX=Vehicles

AR = Use as Required - = Non Illustrated Part P.A.R. = Paint as Required

« RETURN TO GROUP INDEX

WHEEL, STEERING GRAND CHEROKEE (ZJ) 1996
Figure 19-140

19-140

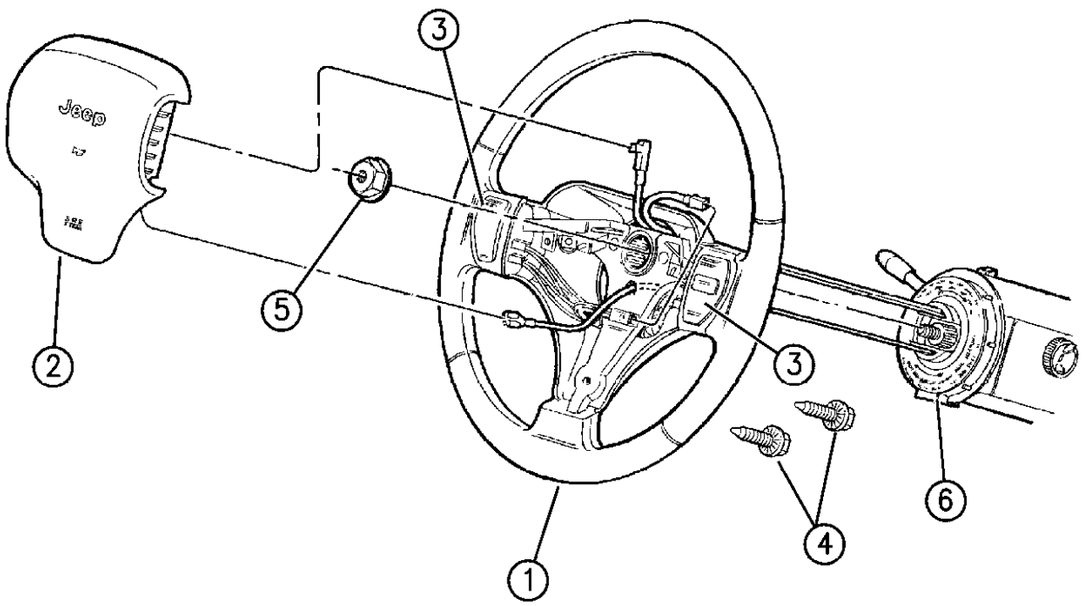

ITEM	PART NUMBER	QTY	BODY	MODEL	DESCRIPTION
1					WHEEL, Steering, Leather (w/Std. Speed Control)
	5DW0 5SX9	1			w/o Radio Controls
	5DV0 6SX9	1			w/Radio Controls
2					MODULE, Air Bag
	5DU3 9SX8	1			Black
	4856 623	1			COVER, AIR BAG MODULE (Not Illustrated)
3					SWITCH, Radio/Speed Control
	5600 7338-9	1			Radio Control
	5600 7336-7	1			Speed Control
-	6032 452	4			SCREW, M4.2x1.69x15.88
4	6503 953	3			SCREW, M6x1.00x28.00
5	6500 906	1			NUT, w/Washer M14x1.50
6					CLOCKSPRING PACKAGE ***
	5604 2128	1			w/o Speed Proportional Steering (SBC)
	5604 2107	1			w/Speed Proportional Steering (SBC)

MODEL CODES:

72=2 DR Wagon
74=4 DR Wagon
77=Open Body 93" Whlbase
78=Open Body 103" Whlbase - Export
T=2WD
J,N=4WD
U=4WD (RHD)

BODY STYLES:

YJ=Wrangler (4X4) "S"
Weangler (4X4) SE
Wrangler (4X4) Sahara
Wrangler (4X4) Renegade
XJ=Cherokee SE
Cherokee Sport
Cherokee Country
ZJ=Grand Cherokee SE
Grand Cherokee Laredo
Grand Cherolee Limited
ZG=Grand Cherokee European
Y1=Wrangler
X1=Cherokee
Z1=Grand Cherokee
KDX=Vehicles

94J19 140

AR = Use as Required - = Non Illustrated Part P.A.R. = Paint as Required

COLUMN ASSEMBLY, STEERING WRANGLER, (YJ)
Figure 19-205

19–205

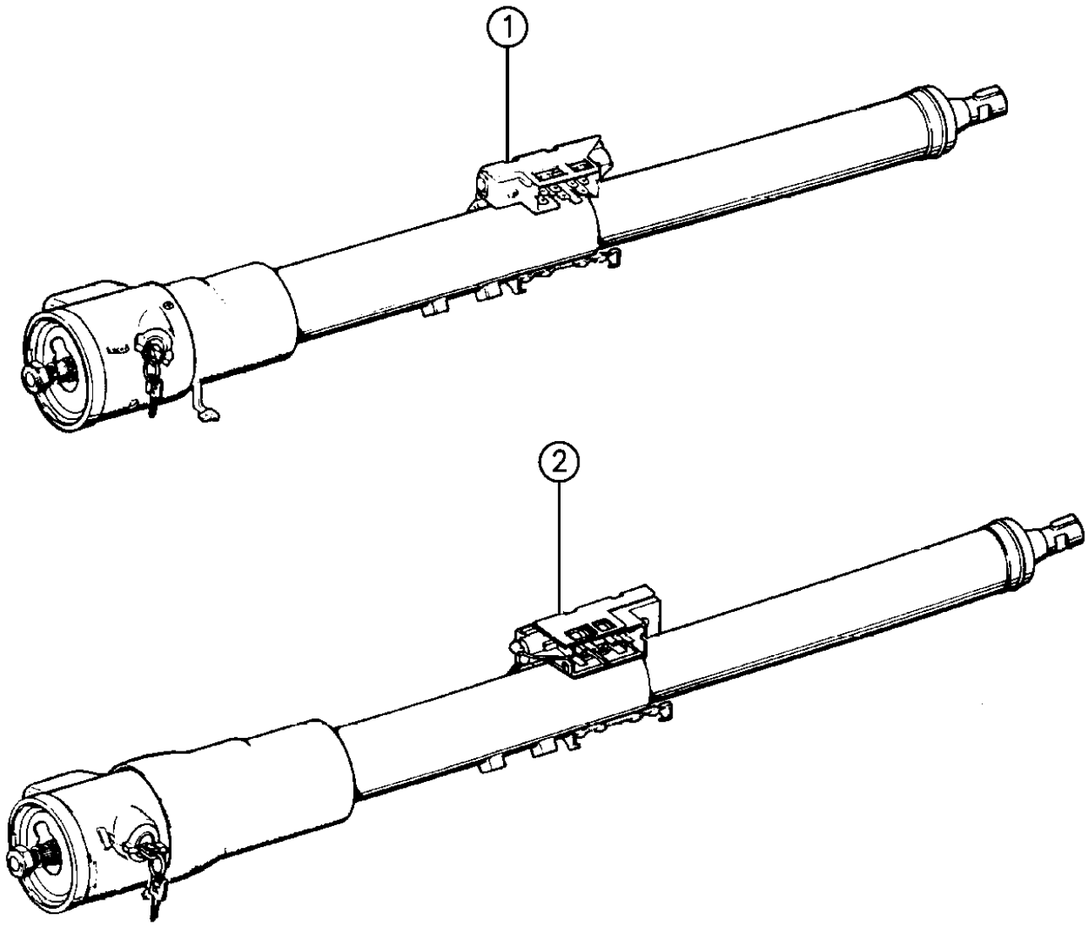

94J19 205

ITEM	PART NUMBER	QTY	BODY	MODEL	DESCRIPTION
1	5207 8615	1			COLUMN ASSEMBLY, w/Manual Transmission, w/Floor Gear Shift, w/o Tilt, w/o Intermittent Wipers
	5207 8593	1			COLUMN ASSEMBLY, w/Manual Transmission, w/Floor Gear Shift, w/o Tilt, w/Intermittent Wipers
2	5207 8608	1			COLUMN ASSEMBLY, w/Manual Transmission, w/Floor Gear Shift, w/Tilt, w/Intermittent Wipers
	5207 8607	1			COLUMN ASSEMBLY, w/Automatic Transmission, w/Column Gear Shift, w/Tilt, w/Intermittent Wipers

MODEL CODES:

72=2 DR Wagon
74=4 DR Wagon
77=Open Body 93" Whlbase
78=Open Body 103" Whlbase - Export
T=2WD
J,N=4WD
U=4WD (RHD)

BODY STYLES:

YJ=Wrangler (4X4) "S"
Weangler (4X4) SE
Wrangler (4X4) Sahara
Wrangler (4X4) Renegade
XJ=Cherokee SE
Cherokee Sport
Cherokee Country
ZJ=Grand Cherokee SE
Grand Cherokee Laredo
Grand Cherolee Limited
ZG=Grand Cherokee European
Y1=Wrangler
X1=Cherokee
Z1=Grand Cherokee
KDX=Vehicles

AR = Use as Required - = Non Illustrated Part P.A.R. = Paint as Required

HOUSING STEERING COLUMN UPPER W/FLOOR GEAR SHIFT, W/O TILT WRANGLER, YJ
Figure 19-210

19-210A

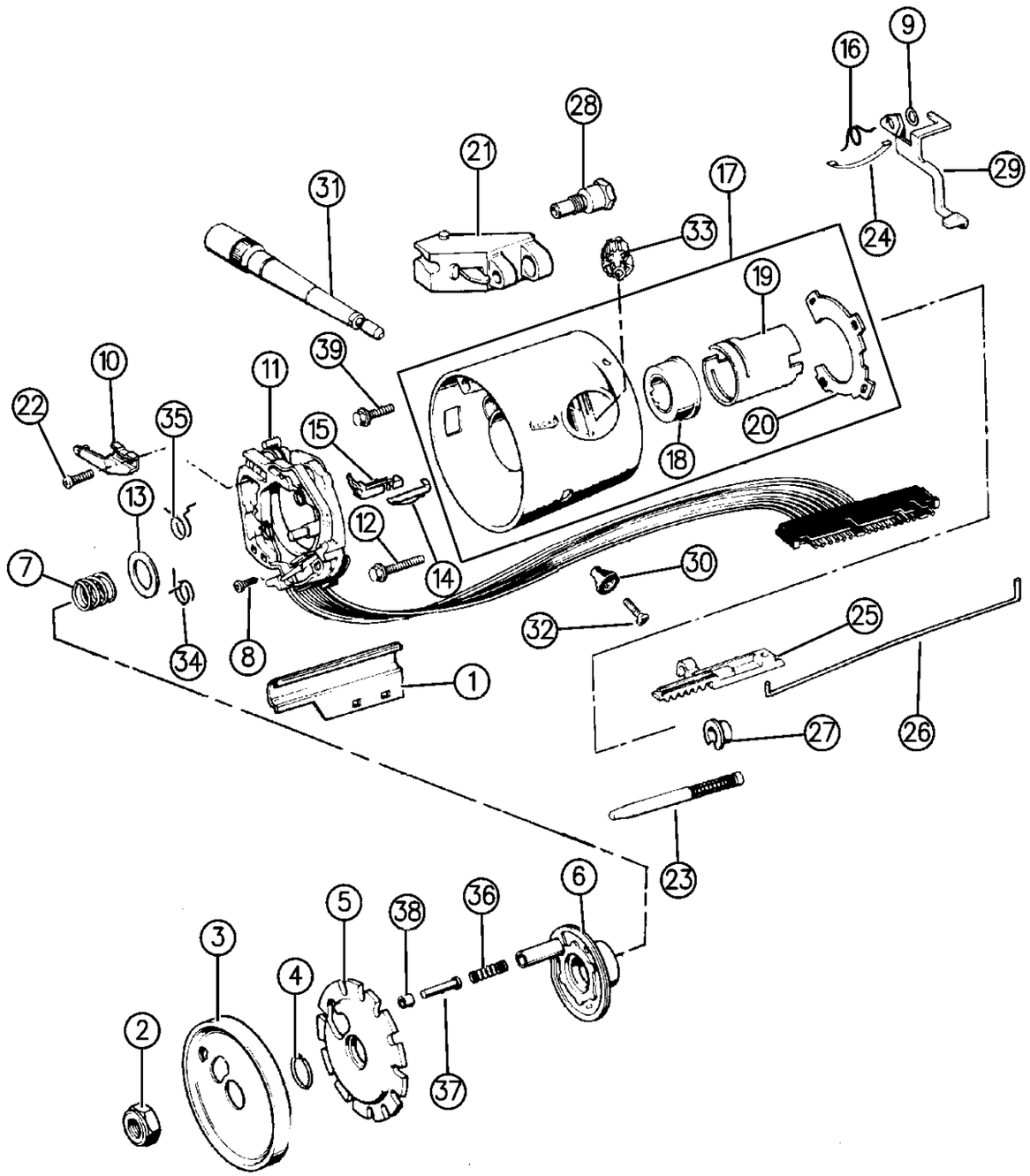

ITEM	PART NUMBER	QTY	BODY	MODEL	DESCRIPTION
1	8350 2566	1			PROTECTOR
2	J420 0414	1			NUT
3	J322 8743	1			COVER, Shift Lock
4	2925 062	1			RING
5	J812 7831	1			LOCK
6	J448 7711	1			CAM, Cancelling
7	J448 7765	1			SPRING
8	J448 8301	3			SCREW
9	J812 0186	1			WASHER
10	8351 0088	1			ARM, Switch Actuator
11	5600 7255	1			SWITCH, Turn Signal
12	J448 7761	4			SCREW
13	J320 8008	1			WASHER
14	J321 1423	1			SWITCH, Key Buzzer
15	J448 7713	1			CLIP
16	J812 0185	1			SPRING
17	J813 4499	1			HOUSING ASSEMBLY
18	J812 7850	1			BEARING ASSEMBLY
19	J813 3537	1			BUSHING
20	J813 4703	1			RETAINER
21					SWITCH ASSEMBLY, Wipers
	5600 0031	1			w/o Intermittent Wipers
	5600 7298	1			w/Intermittent Wipers
22	J400 1267	1			SCREW
23	J448 7897	1			BOLT
24	J448 7774	1			SPRING
25	J812 1437	1			RACK
26	8350 2913	1			ROD
27	J448 7777	1			WASHER
28	J813 3538	1			PIN
29	J813 3541	1			LEVER
30	5600 3149	1			KNOB, Hazard Warning
31					LEVER, Turn Signal
	5600 3867	1			w/o Intermittent Wipers
	5600 2951	1			w/o Cruise Control, w/Intermittent Wipers
	5600 4595	1			w/Cruise Control, w/Intermittent Wipers
32	3420 2670	1			SCREW
33	J812 0097	1			SECTOR
34	J812 9317	1			SPRING, Left Lower
35	J812 9335	1			SPRING, Right Upper
36	5200 4402	1			SPRING
37	5203 8366	1			PIN

MODEL CODES:

72=2 DR Wagon
74=4 DR Wagon
77=Open Body 93" Whlbase
78=Open Body 103" Whlbase - Export
T=2WD
J,N=4WD
U=4WD (RHD)

BODY STYLES:

YJ=Wrangler (4X4) "S"
Weangler (4X4) SE
Wrangler (4X4) Sahara
Wrangler (4X4) Renegade
XJ=Cherokee SE
Cherokee Sport
Cherokee Country
ZJ=Grand Cherokee SE
Grand Cherokee Laredo
Grand Cherolee Limited
ZG=Grand Cherokee European
Y1=Wrangler
X1=Cherokee
Z1=Grand Cherokee
KDX=Vehicles

AR = Use as Required - = Non Illustrated Part P.A.R. = Paint as Required

HOUSING STEERING COLUMN UPPER W/FLOOR GEAR SHIFT, W/O TILT WRANGLER, YJ
Figure 19-210

19-210A

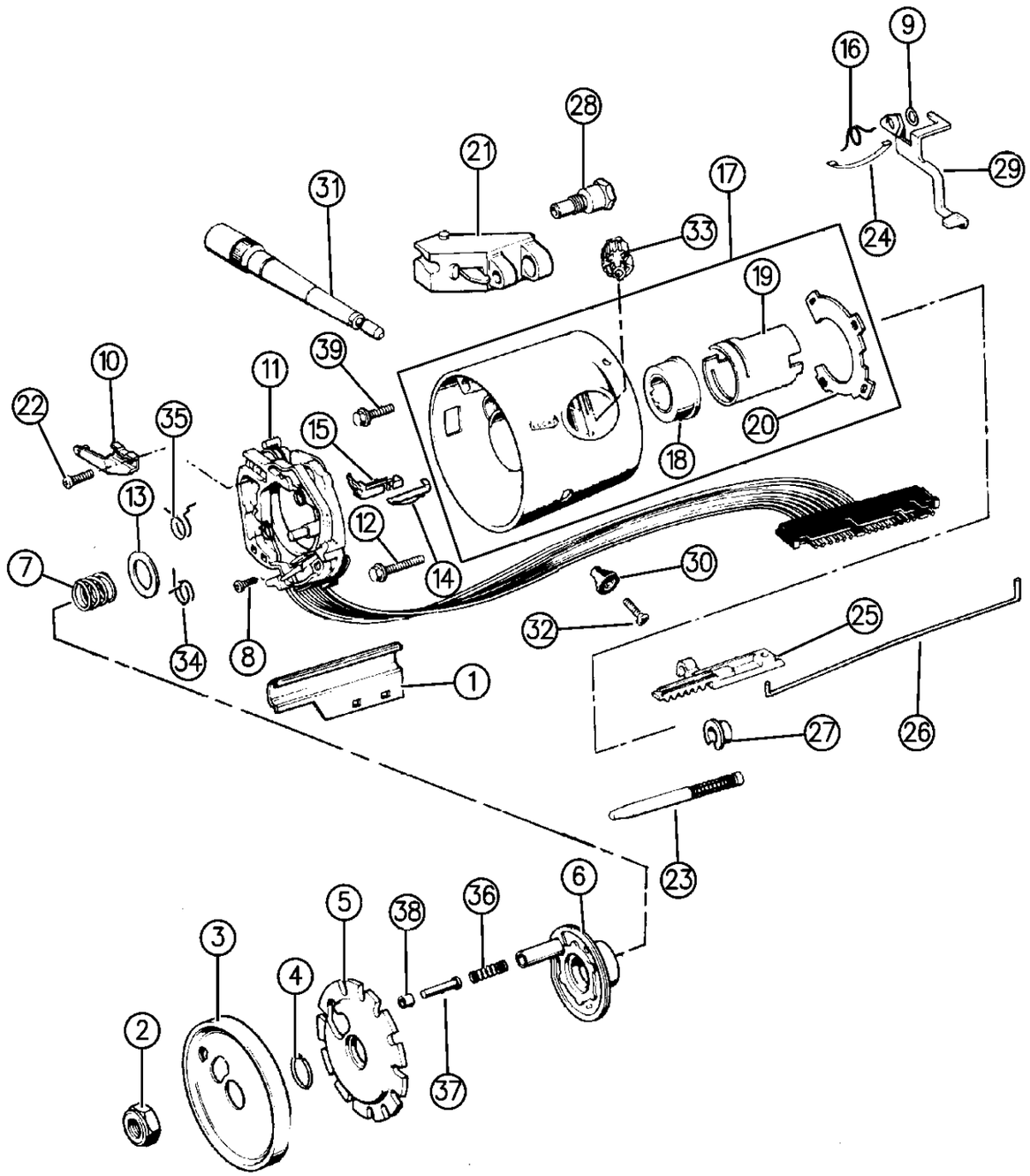

ITEM	PART NUMBER	QTY	BODY	MODEL	DESCRIPTION
38	J318 7257	1			RETAINER
39	8350 2102	1			SCREW

MODEL CODES:

72=2 DR Wagon
74=4 DR Wagon
77=Open Body 93" Whlbase
78=Open Body 103" Whlbase - Export
T=2WD
J,N=4WD
U=4WD (RHD)

BODY STYLES:

YJ=Wrangler (4X4) "S"
Weangler (4X4) SE
Wrangler (4X4) Sahara
Wrangler (4X4) Renegade

XJ=Cherokee SE
Cherokee Sport
Cherokee Country

ZJ=Grand Cherokee SE
Grand Cherokee Laredo
Grand Cherolee Limited
ZG=Grand Cherokee European

Y1=Wrangler
X1=Cherokee
Z1=Grand Cherokee
KDX=Vehicles

AR = Use as Required - = Non Illustrated Part P.A.R. = Paint as Required

HOUSING STEERING COLUMN LOWER W/FLOOR GEAR SHIFT, W/O TILT WRANGLER, (YJ)
Figure 19-215

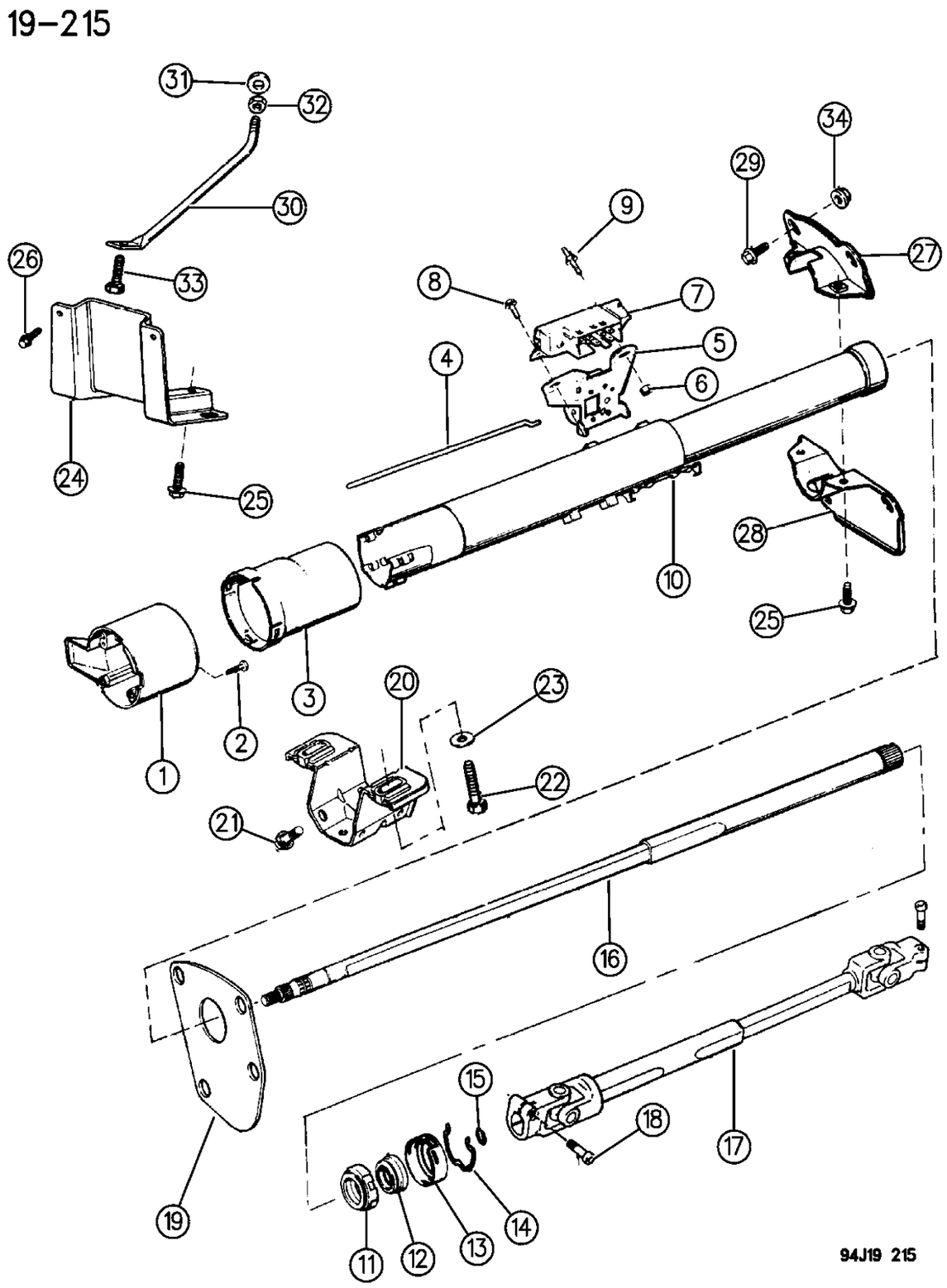

ITEM	PART NUMBER	QTY	BODY	MODEL	DESCRIPTION
1	J813 4497	1			BOWL
2	J448 8301	3			SCREW
3	8350 1374	1			SHROUD, Bowl
4	8350 2784	1			ROD, Dimmer Switch Actuator
5	5600 3406	1			SWITCH, Headlamp Dimmer
6	J012 0361	1			NUT
7	J325 0576	1			SWITCH, Ignition
8	J448 7772	1			SCREW
9	J813 3546	1			STUD
10	8350 2906	1			JACKET ASSEMBLY
11	J448 7696	1			ADAPTER
12	J448 6713	1			BEARING
13	J448 7743	1			RETAINER
14	J448 7739	1			CLIP
15	2925 062	1			RING
16	8350 2908	1			SHAFT, Steering Column Upper
17					SHAFT, Steering Column Lower
	5200 7017	1			w/Power Steering
	5200 7022	1			w/o Power Steering
18	#6502 441	2			BOLT, M8x1.25x30.00
19	J319 6896	1			SEAL
20	J535 1229	1			BRACKET
21	1150 2764	4			SCREW
22	J018 0126	2			BOLT
23	J012 0388	2			WASHER
24	5207 8054	1			BRACKET
	5207 9045	1			RHD, (XDT)
25	J027 3573	3			SCREW
26	J400 4991	2			SCREW
27	J536 3488	1			PLATE
28	J319 6897	1			PLATE
29	J400 4520	4			SCREW
30	5200 2840	1			BRACE
	5525 5636	1			RHD (XDT)
31	S012 0390	2			WASHER
32	J400 5098	2			NUT
33	J400 7131	1			BOLT
34	J400 4866	4			NUT

MODEL CODES:

72=2 DR Wagon
74=4 DR Wagon
77=Open Body 93" Whlbase
78=Open Body 103" Whlbase - Export
T=2WD
J,N=4WD
U=4WD (RHD)

BODY STYLES:

YJ=Wrangler (4X4) "S"
Weangler (4X4) SE
Wrangler (4X4) Sahara
Wrangler (4X4) Renegade
XJ=Cherokee SE
Cherokee Sport
Cherokee Country
ZJ=Grand Cherokee SE
Grand Cherokee Laredo
Grand Cherolee Limited
ZG=Grand Cherokee European
Y1=Wrangler
X1=Cherokee
Z1=Grand Cherokee
KDX=Vehicles

AR = Use as Required - = Non Illustrated Part P.A.R. = Paint as Required

« RETURN TO GROUP INDEX

HOUSING STEERING COLUMN UPPER W/FLOOR GEAR SHIFT, W/TILT WRANGLER, (YJ)
Figure 19-220

19-220

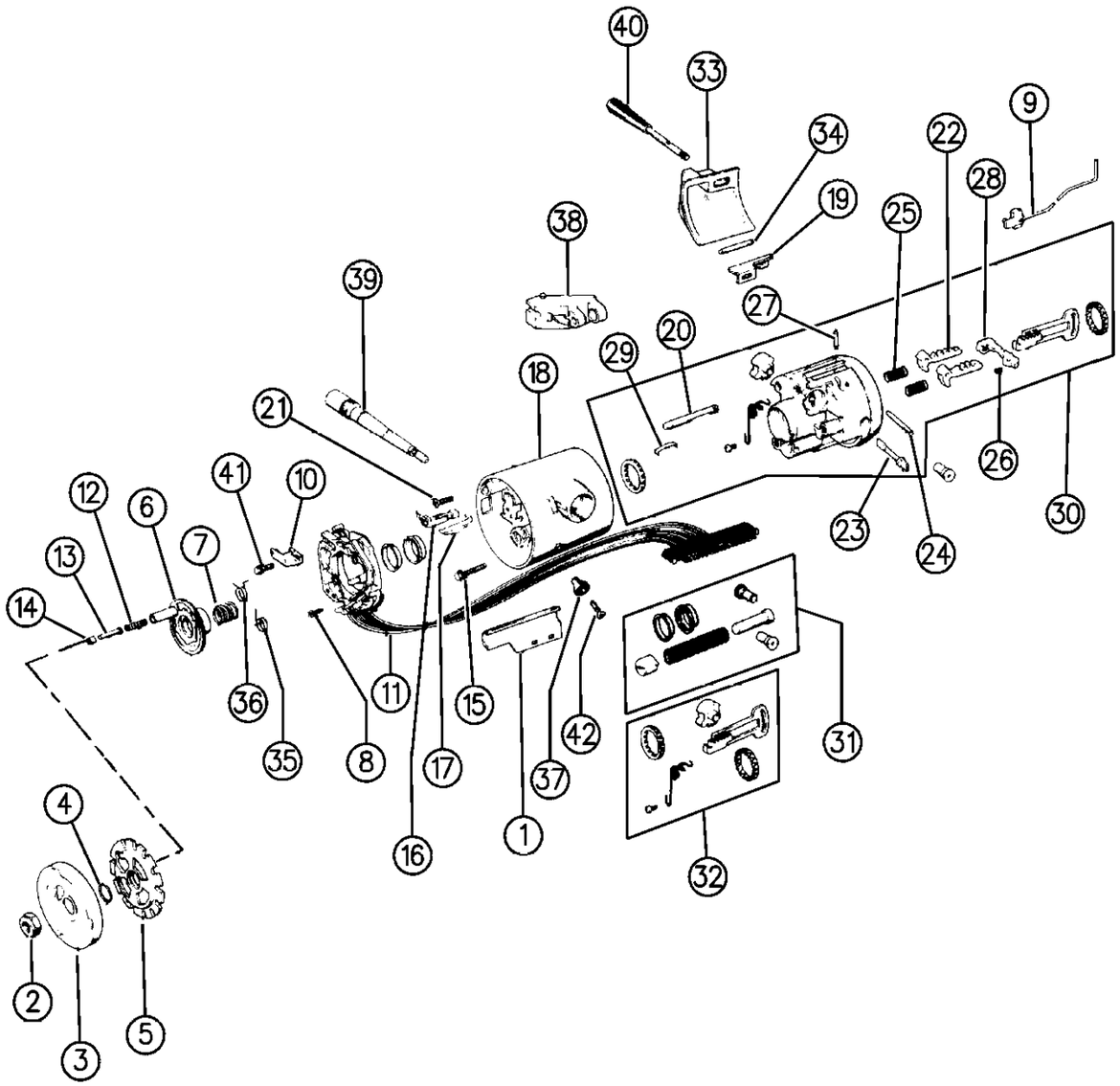

94J19 220

ITEM	PART NUMBER	QTY	BODY	MODEL	DESCRIPTION
1	8350 2566	1			PROTECTOR
2	J420 0414	1			NUT
3	J322 8743	1			COVER, Shift Lock
4	2925 062	1			RING
5	J325 1125	1			LOCK
6	J448 7816	1			CAM, Cancelling
7	3575 981	1			SPRING
8	J448 8301	3			SCREW
9	8350 2915	1			ACTUATOR ASSEMBLY, Ignition Switch ***
10	8350 1575	1			ARM, Switch Actuator
11	5600 7255	1			SWITCH, Turn Signal
12	5200 4402	1			SPRING
13	5203 8366	1			PIN
14	J318 7257	1			RETAINER
15	J813 3572	3			SCREW
16	J321 1424	1			SWITCH, Key Buzzer
17	J448 7853	1			CLIP
18	4636 805	1			COVER, Steering Column Housing
19	4019 787	1			ACTUATOR, Dimmer Switch Rod
20	J325 1124	1			BOLT
21	8350 2103	1			SCREW
22					SHOE
	J812 2716	1			Lt.
	J448 7828	1			Rt.
23	J813 4191	1			SHAFT
24	J448 7822	1			PIN
25	J448 7832	2			SPRING
26	J320 8047	1			SPRING
27	J320 8043	1			PIN
28	J813 3567	1			LEVER
29	J448 7831	1			SPRING
30	8350 1107	1			HOUSING, Steering Column
31	8351 0054	1			PARTS PACKAGE
32	8351 0055	1			RACK PACKAGE
33	J813 4704	1			CAP
34	J813 3565	1			PIN
35	J812 9317	1			SPRING, Left Lower
36	J812 9335	1			SPRING, Right Upper
37	5600 3149	1			KNOB, Hazard Warning
38	5600 0033	1			SWITCH ASSEMBLY, Intermittent Wipers
39					LEVER, Turn Signal
	5600 3867	1			w/o Intermittent Wipers, w/o Cruise Control

MODEL CODES:

72=2 DR Wagon
74=4 DR Wagon
77=Open Body 93" Whlbase
78=Open Body 103" Whlbase - Export
T=2WD
J,N=4WD
U=4WD (RHD)

BODY STYLES:

YJ=Wrangler (4X4) "S"
Weangler (4X4) SE
Wrangler (4X4) Sahara
Wrangler (4X4) Renegade
XJ=Cherokee SE
Cherokee Sport
Cherokee Country
ZJ=Grand Cherokee SE
Grand Cherokee Laredo
Grand Cherolee Limited
ZG=Grand Cherokee European
Y1=Wrangler
X1=Cherokee
Z1=Grand Cherokee
KDX=Vehicles

AR = Use as Required - = Non Illustrated Part P.A.R. = Paint as Required

HOUSING STEERING COLUMN UPPER W/FLOOR GEAR SHIFT, W/TILT WRANGLER, (YJ)
Figure 19-220

19-220

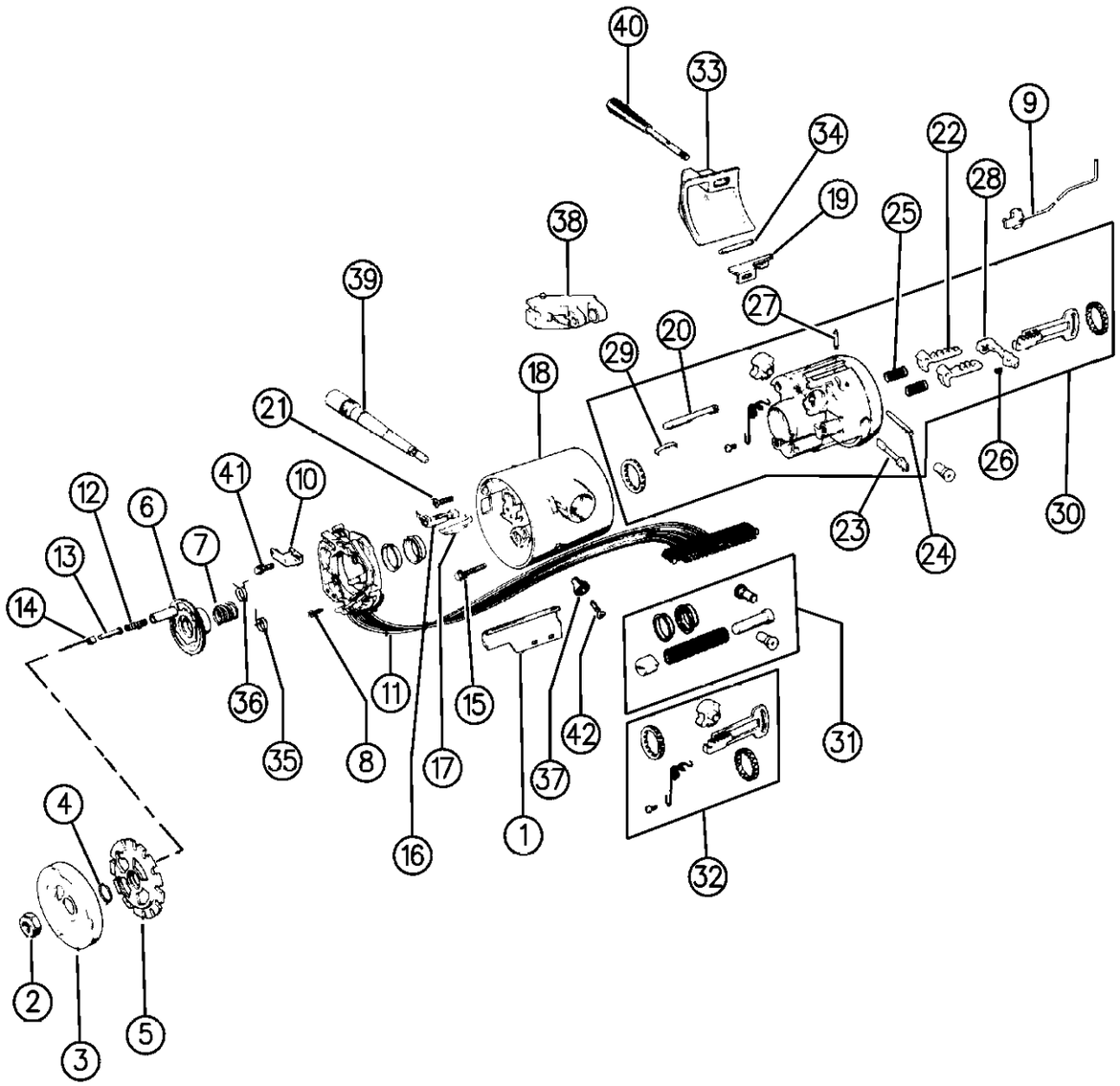

94J19 220

ITEM	PART NUMBER	QTY	BODY	MODEL	DESCRIPTION
	5600 2951	1			w/Intermittent Wipers, w/o Cruise Control
	5600 4595	1			w/Intermittent Wipers, w/Cruise Control
40	5200 6207	1			LEVER, Wheel Release
41	J400 1267	1			SCREW
42	3420 2670	1			SCREW

MODEL CODES:

72=2 DR Wagon
74=4 DR Wagon
77=Open Body 93" Whlbase
78=Open Body 103" Whlbase - Export
T=2WD
J,N=4WD
U=4WD (RHD)

BODY STYLES:

YJ=Wrangler (4X4) "S"
Weangler (4X4) SE
Wrangler (4X4) Sahara
Wrangler (4X4) Renegade
XJ=Cherokee SE
Cherokee Sport
Cherokee Country
ZJ=Grand Cherokee SE
Grand Cherokee Laredo
Grand Cherolee Limited
ZG=Grand Cherokee European
Y1=Wrangler
X1=Cherokee
Z1=Grand Cherokee
KDX=Vehicles

AR = Use as Required - = Non Illustrated Part P.A.R. = Paint as Required

HOUSING STEERING COLUMN LOWER W/FLOOR GEAR SHIFT, W/TILT WRANGLER, (YJ)
Figure 19-225

19–225

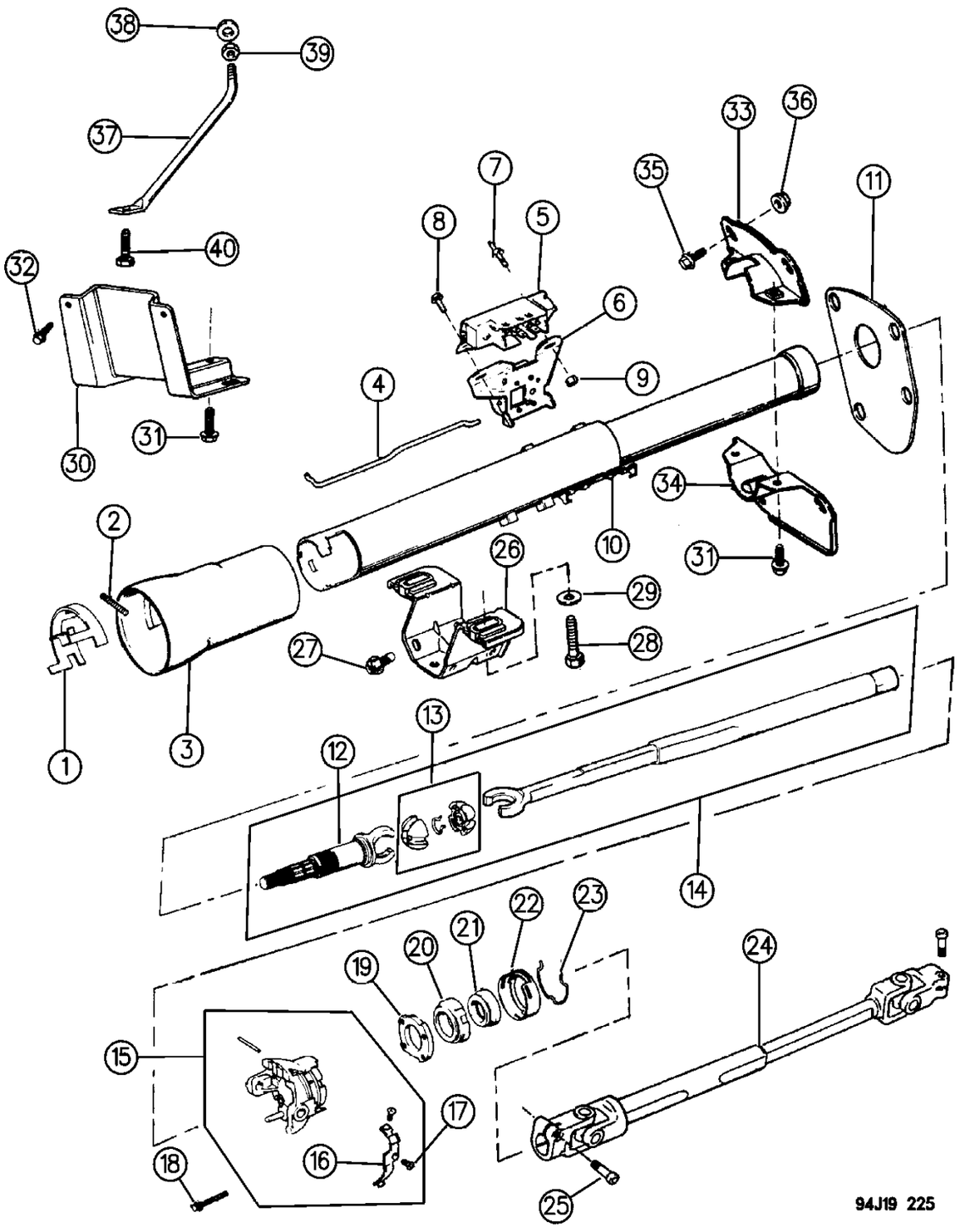

ITEM	PART NUMBER	QTY	BODY	MODEL	DESCRIPTION
1	J812 8154	1			LEVER
2	4019 298	1			SPRING
3	8350 0359	1			SHROUD, Shift Bowl
4	8350 2911	1			ROD, Dimmer Switch Actuator
5	J325 0575	1			SWITCH, Ignition Lock
6	5600 3406	1			SWITCH, Headlamp Dimmer
7	J813 3546	1			STUD
8	J448 7772	1			SCREW
9	J012 0361	1			NUT
10	8350 2905	1			JACKET ASSEMBLY
11	J319 6896	1			SEAL
12	J812 8888	1			SHAFT, Steering Column Upper
13	4147 365	1			SPHERE
14	8350 2907	1			SHAFT ASSEMBLY, Steering Column Upper
15	8350 1109	1			SUPPORT
16	J813 3569	1			PLATE
17	J320 8210	2			SCREW
18	J448 7867	4			SCREW
19	J448 7860	1			PLATE
20	J448 7696	1			ADAPTER
21	J448 6713	1			BEARING
22	J448 7743	1			RETAINER
23	J448 7739	1			CLIP
24					SHAFT, Steering Column Lower
	5200 7017	1			w/Power Steering
	5200 7022	1			w/o Power Steering
25		2			BOLT, M8x1.25-30 (Not Serv.)
26	J535 1229	1			BRACKET
27	1150 2764	4			SCREW
28	J018 0126	2			BOLT
29	J012 0388	2			WASHER
30	5207 8054	1			BRACKET
31	J027 3573	3			SCREW
32	J400 4991	2			SCREW
33	J536 3488	1			PLATE
34	J319 6897	1			PLATE
35	J400 4520	4			SCREW
36	J400 4866	4			NUT
37	5200 2840	1			BRACE
38	S012 0390	2			WASHER
39	J400 5098	2			NUT
40	J400 7131	1			BOLT

MODEL CODES:

72=2 DR Wagon
74=4 DR Wagon
77=Open Body 93" Whlbase
78=Open Body 103" Whlbase - Export
T=2WD
J,N=4WD
U=4WD (RHD)

BODY STYLES:

YJ=Wrangler (4X4) "S"
Weangler (4X4) SE
Wrangler (4X4) Sahara
Wrangler (4X4) Renegade
XJ=Cherokee SE
Cherokee Sport
Cherokee Country
ZJ=Grand Cherokee SE
Grand Cherokee Laredo
Grand Cherolee Limited
ZG=Grand Cherokee European
Y1=Wrangler
X1=Cherokee
Z1=Grand Cherokee
KDX=Vehicles

AR = Use as Required - = Non Illustrated Part P.A.R. = Paint as Required

« RETURN TO GROUP INDEX

HOUSING STEERING COLUMN UPPER W/COLUMN GEAR SHIFT, W/TILT WRANGLER, (YJ)
Figure 19-230

19–230

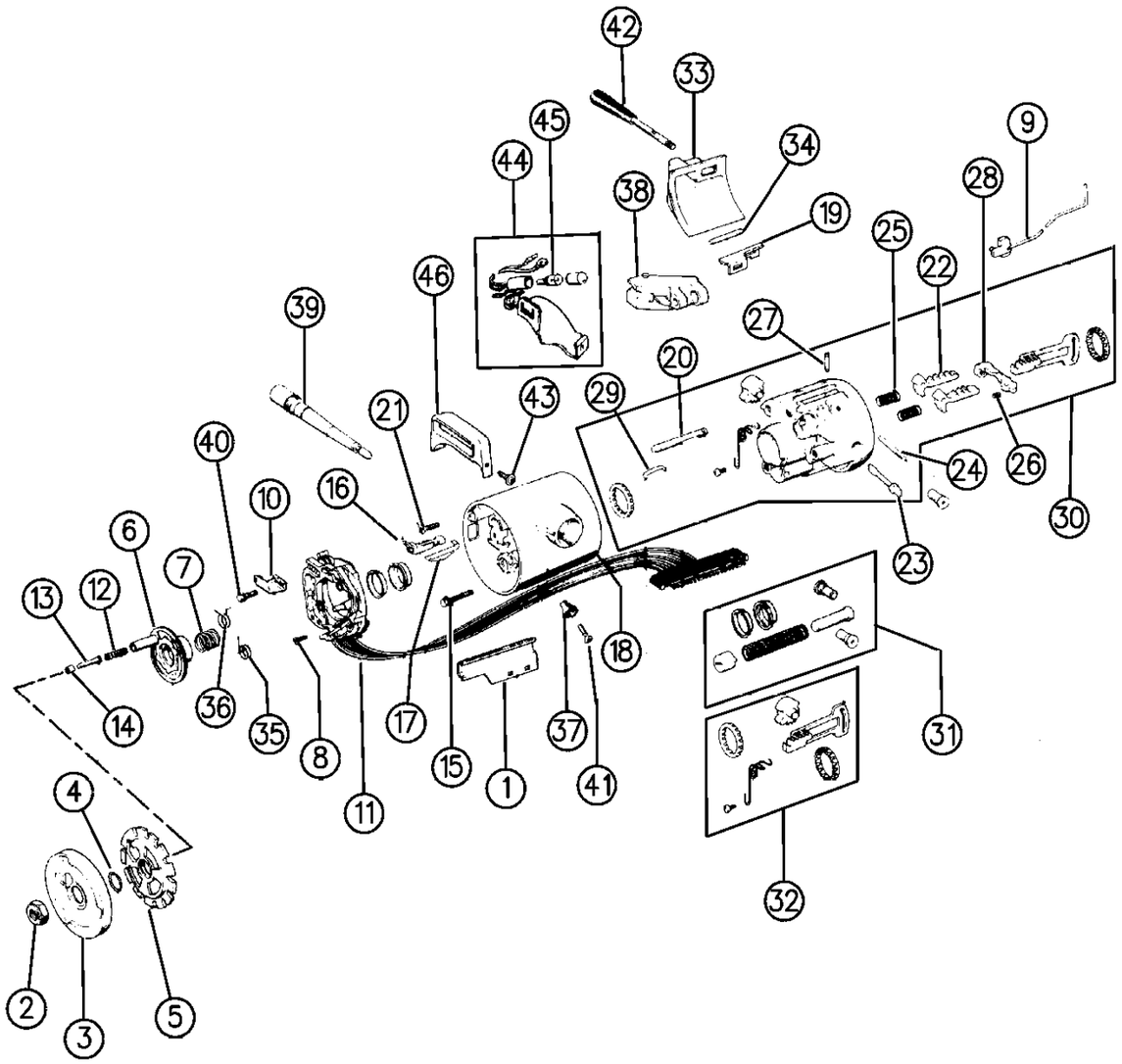

94J19 230

ITEM	PART NUMBER	QTY	BODY	MODEL	DESCRIPTION
1	8350 2566	1			PROTECTOR
2	J420 0414	1			NUT
3	J322 8743	1			COVER, Shift Lock
4	2925 062	1			RING
5	J812 7874	1			LOCK
6	J448 7816	1			CAM, Cancelling
7	3575 981	1			SPRING
8	J448 8301	3			SCREW
9	8350 2914	1			ACTUATOR ASSEMBLY, Ignition Switch ***
10	8350 1575	1			ARM, Switch Actuator
11	5600 7255	1			SWITCH, Turn Signal
12	5200 4402	1			SPRING
13	J318 7249	1			PIN
14	J318 7257	1			RETAINER
15	J813 3572	3			SCREW
16	J321 1424	1			SWITCH, Key Buzzer
17	J448 7853	1			CLIP
18	8350 4379	1			COVER, Steering Column Housing
19	4019 787	1			ACTUATOR, Dimmer Switch Rod
20	4019 336	1			BOLT
21	8350 2103	1			SCREW
22					SHOE
	8350 2583	1			Lt.
	J448 7828	1			Rt.
23	J813 4191	1			SHAFT
24	J448 7822	1			PIN
25	J448 7832	2			SPRING
26	J320 8047	1			SPRING
27	J320 8043	1			PIN
28	J813 3567	1			LEVER
29	J448 7831	1			SPRING
30	8350 2582	1			HOUSING, Steering Column
31	8351 0054	1			PARTS PACKAGE
32	8351 0055	1			RACK PACKAGE
33	J813 4704	1			CAP
34	J813 3565	1			PIN
35	J812 9317	1			SPRING, Lt. Lower
36	J812 9335	1			SPRING, Rt. Upper
37	5600 3149	1			KNOB, Hazard Warning
38	5600 0033	1			SWITCH ASSEMBLY, Intermittent Wipers
39					LEVER, Turn Signal
	5600 3867	1			w/o Intermittent Wipers, w/o Cruise Control

MODEL CODES:

72=2 DR Wagon
74=4 DR Wagon
77=Open Body 93" Whlbase
78=Open Body 103" Whlbase - Export
T=2WD
J,N=4WD
U=4WD (RHD)

BODY STYLES:

YJ=Wrangler (4X4) "S"
Weangler (4X4) SE
Wrangler (4X4) Sahara
Wrangler (4X4) Renegade
XJ=Cherokee SE
Cherokee Sport
Cherokee Country
ZJ=Grand Cherokee SE
Grand Cherokee Laredo
Grand Cherolee Limited
ZG=Grand Cherokee European
Y1=Wrangler
X1=Cherokee
Z1=Grand Cherokee
KDX=Vehicles

AR = Use as Required - = Non Illustrated Part P.A.R. = Paint as Required

HOUSING STEERING COLUMN UPPER W/COLUMN GEAR SHIFT, W/TILT WRANGLER, (YJ)
Figure 19-230

19–230

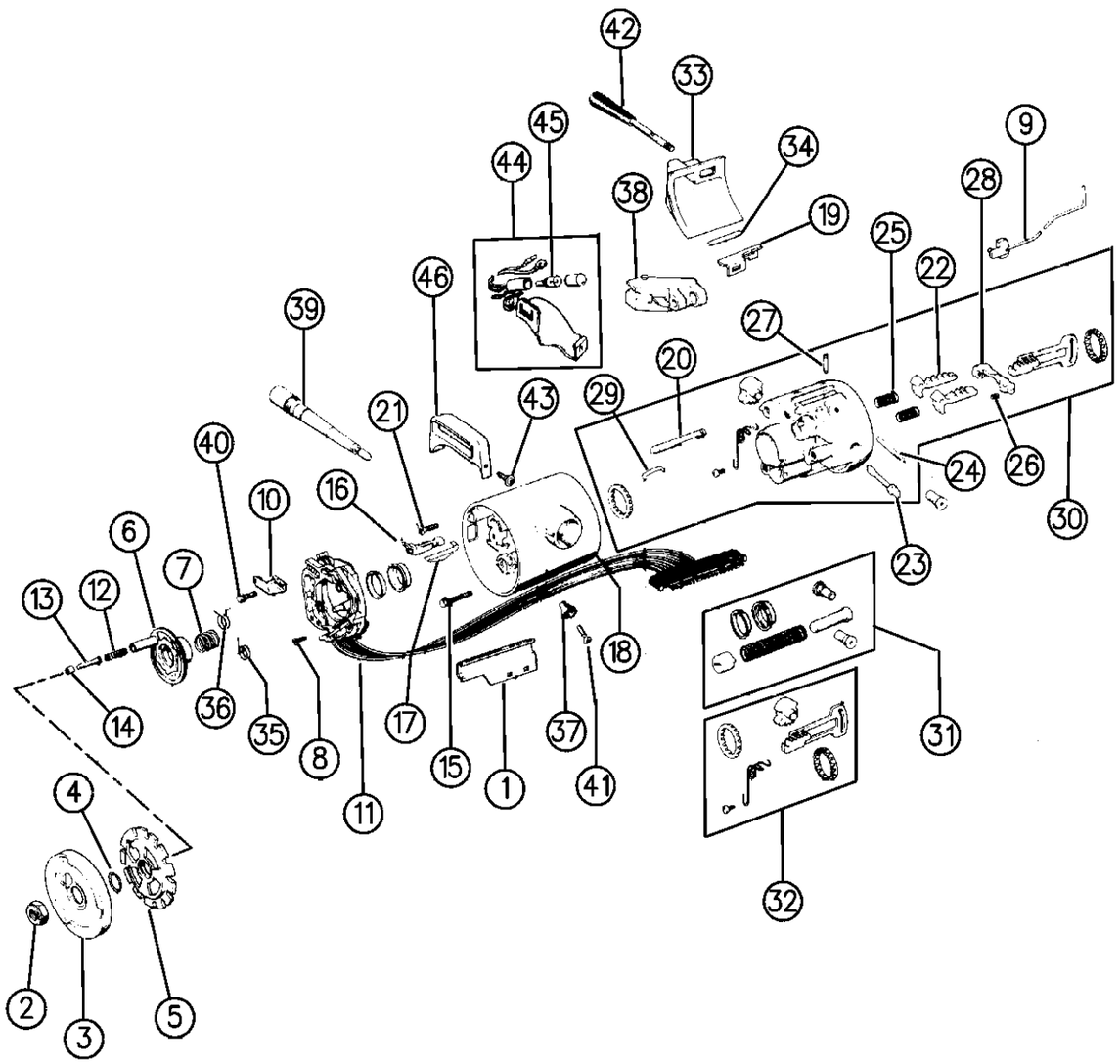

94J19 230

ITEM	PART NUMBER	QTY	BODY	MODEL	DESCRIPTION
	5600 2951	1			w/Intermittent Wipers, w/o Cruise Control
	5600 4595	1			w/Intermittent Wipers, w/Cruise Control
40	J400 1267	1			SCREW
41	3420 2670	1			SCREW
42	5200 6207	1			LEVER, Wheel Release
43	J400 4812	1			SCREW
44	8350 2549	1			BRACKET
45	S943 6970	1			BULB
46	5200 3153	1			BEZEL, Gear Selector

MODEL CODES:

72=2 DR Wagon
74=4 DR Wagon
77=Open Body 93" Whlbase
78=Open Body 103" Whlbase - Export
T=2WD
J,N=4WD
U=4WD (RHD)

BODY STYLES:

YJ=Wrangler (4X4) "S"
Weangler (4X4) SE
Wrangler (4X4) Sahara
Wrangler (4X4) Renegade
XJ=Cherokee SE
Cherokee Sport
Cherokee Country
ZJ=Grand Cherokee SE
Grand Cherokee Laredo
Grand Cherolee Limited
ZG=Grand Cherokee European
Y1=Wrangler
X1=Cherokee
Z1=Grand Cherokee
KDX=Vehicles

AR = Use as Required - = Non Illustrated Part P.A.R. = Paint as Required

HOUSING STEERING COLUMN LOWER W/COLUMN GEAR SHIFT, W/TILT WRANGLER, (YJ)
Figure 19-235

19–235

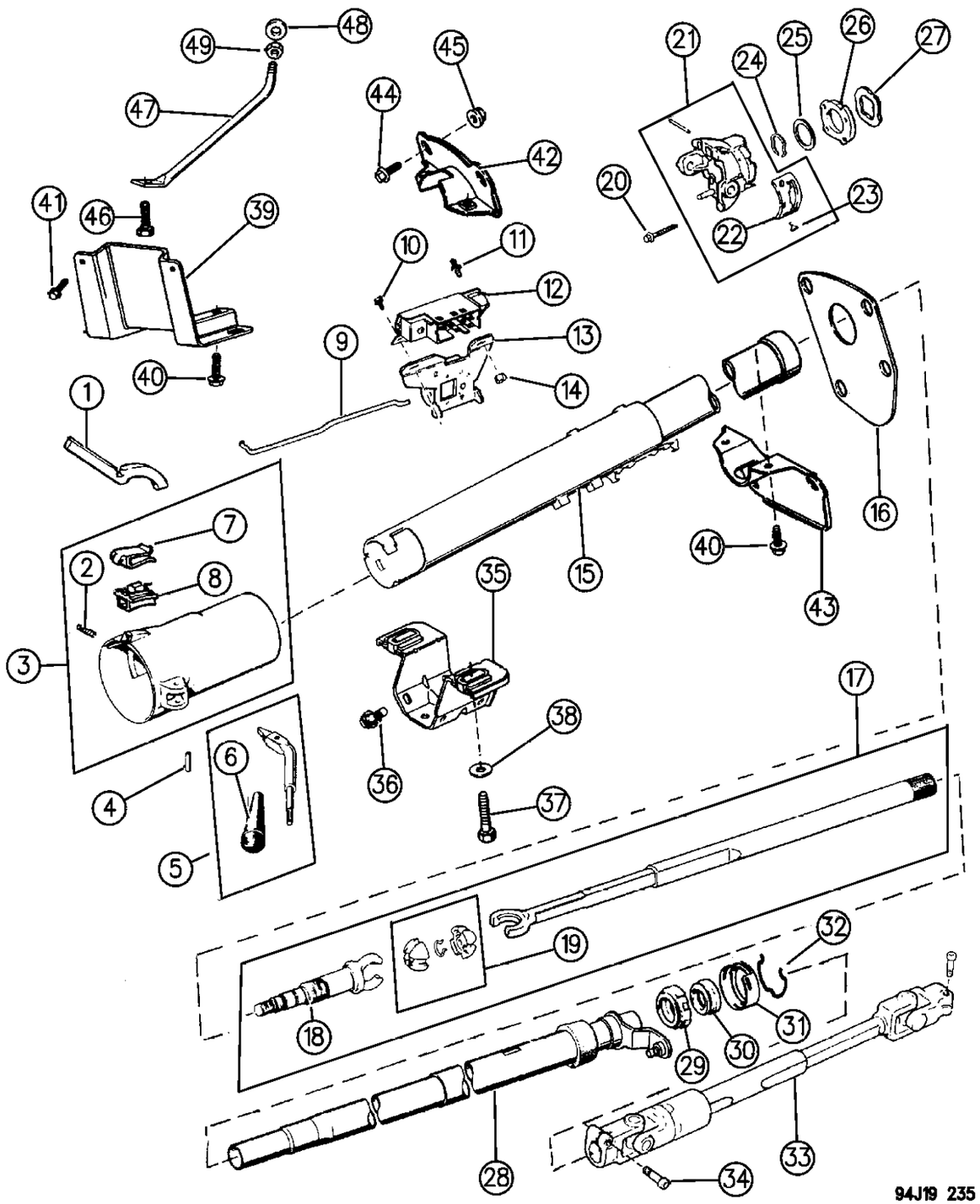

ITEM	PART NUMBER	QTY	BODY	MODEL	DESCRIPTION
1	5200 3154	1			INDICATOR, Shift ***
2	8350 2107	1			SPRING
3	8350 2570	1			SHROUD, Bowl
4	J400 3925	1			PIN
5	5200 6616	1			LEVER, Gear Shift
6	J321 6462	1			KNOB
7	8350 2572	1			CLIP
8	8350 2571	1			BRACKET
9	8350 2910	1			ROD, Dimmer Switch Actuator
10	J448 7772	1			SCREW
11	J813 3546	1			STUD
12	J325 0575	1			SWITCH, Ignition Lock
13	5600 3406	1			SWITCH, Headlamp Dimmer
14	J012 0361	1			NUT, (10-24)
15	8350 2904	1			JACKET ASSEMBLY
16	J319 6896	1			SEAL
17	8350 2907	1			SHAFT ASSEMBLY, Steering Column Upper
18	J812 8888	1			SHAFT, Steering Column Upper
19	4147 365	1			SPHERE
20	J448 7867	4			SCREW
21	8350 2560	1			SUPPORT
22	J319 5616	1			GATE
23	J320 8210	2			SCREW
24	J448 7864	1			RING, Shift Tube Retaining
25	J448 7872	1			WASHER, Thrust
26	J448 7860	1			PLATE
27	J448 7873	1			WASHER, Wave
28	8350 2909	1			TUBE ASSEMBLY, Shift
29	J448 7896	1			ADAPTER
30	J448 6713	1			BEARING
31	J448 7743	1			RETAINER
32	J448 7739	1			CLIP
33					SHAFT, Steering Column Lower
	5200 7017	1			w/Power Steering
	5200 7022	1			w/o Power Steering
34	#6502 441	2			BOLT, M8x1.25x30,00
35	J535 1229	1			BRACKET
36	1150 2764	4			SCREW
37	J018 0126	2			BOLT
38	J012 0388	2			WASHER
39	5207 8054	1			BRACKET
	5207 9045	1			RHD, (XDT)

MODEL CODES:

72=2 DR Wagon
74=4 DR Wagon
77=Open Body 93" Whlbase
78=Open Body 103" Whlbase - Export
T=2WD
J,N=4WD
U=4WD (RHD)

BODY STYLES:

YJ=Wrangler (4X4) "S"
Weangler (4X4) SE
Wrangler (4X4) Sahara
Wrangler (4X4) Renegade
XJ=Cherokee SE
Cherokee Sport
Cherokee Country
ZJ=Grand Cherokee SE
Grand Cherokee Laredo
Grand Cherolee Limited
ZG=Grand Cherokee European
Y1=Wrangler
X1=Cherokee
Z1=Grand Cherokee
KDX=Vehicles

AR = Use as Required - = Non Illustrated Part P.A.R. = Paint as Required

HOUSING STEERING COLUMN LOWER W/COLUMN GEAR SHIFT, W/TILT WRANGLER, (YJ)
Figure 19-235

19–235

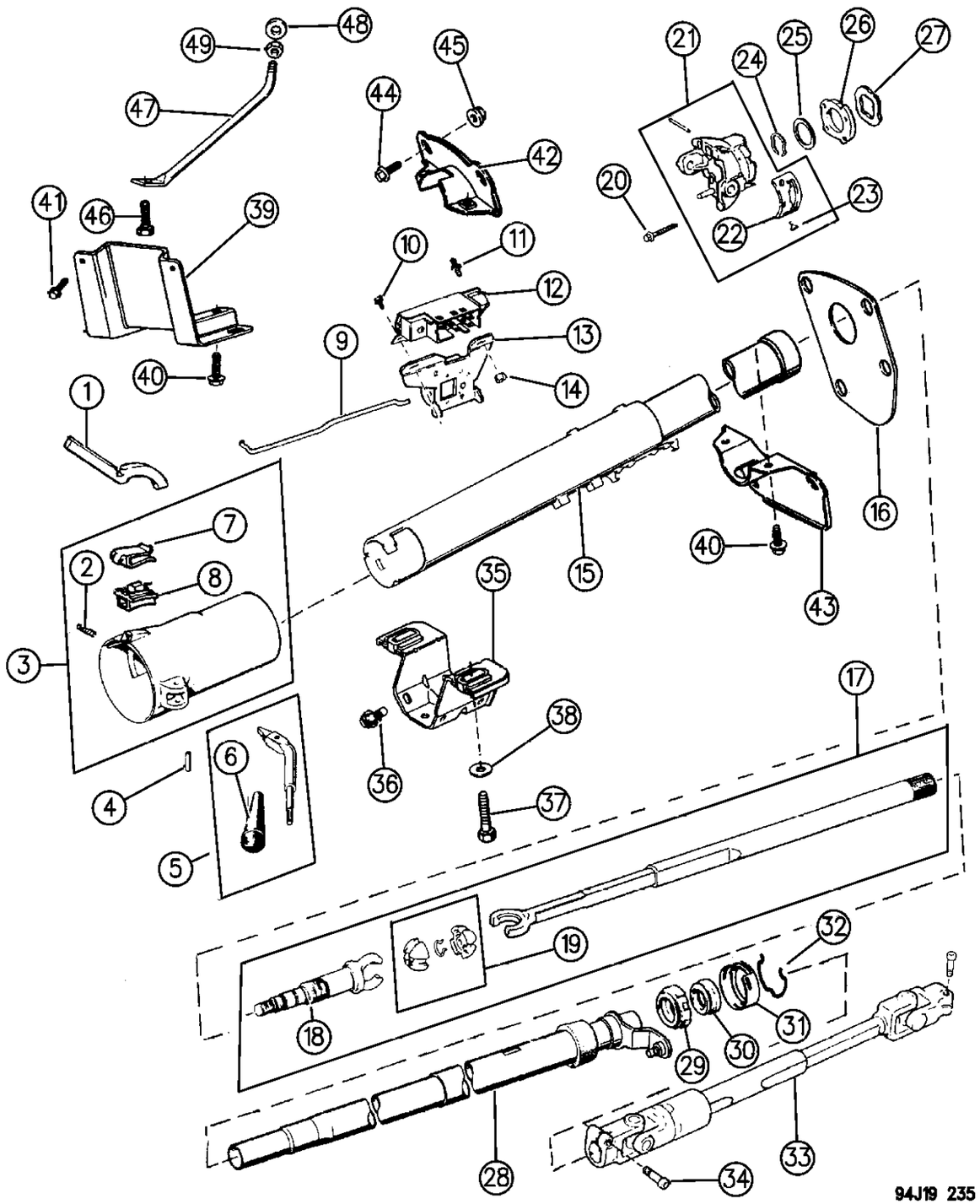

ITEM	PART NUMBER	QTY	BODY	MODEL	DESCRIPTION
40	J027 3573	3			SCREW
41	J400 4991	2			SCREW
42	J536 3488	1			PLATE
43	J319 6897	1			PLATE
44	J400 4520	4			SCREW
45	J400 4866	4			NUT
46	J400 7131	1			BOLT
47	5200 2840	1			BRACE
48	S012 0390	2			WASHER
49	J400 5098	2			NUT

MODEL CODES:

72=2 DR Wagon
74=4 DR Wagon
77=Open Body 93" Whlbase
78=Open Body 103" Whlbase - Export
T=2WD
J,N=4WD
U=4WD (RHD)

BODY STYLES:

YJ=Wrangler (4X4) "S"
Weangler (4X4) SE
Wrangler (4X4) Sahara
Wrangler (4X4) Renegade
XJ=Cherokee SE
Cherokee Sport
Cherokee Country
ZJ=Grand Cherokee SE
Grand Cherokee Laredo
Grand Cherolee Limited
ZG=Grand Cherokee European
Y1=Wrangler
X1=Cherokee
Z1=Grand Cherokee
KDX=Vehicles

AR = Use as Required - = Non Illustrated Part P.A.R. = Paint as Required

COLUMN ASSEMBLY, STEERING W/FLOOR MOUNTED GEAR SHIFT CHEROKEE (1994)
Figure 19-240

19-240

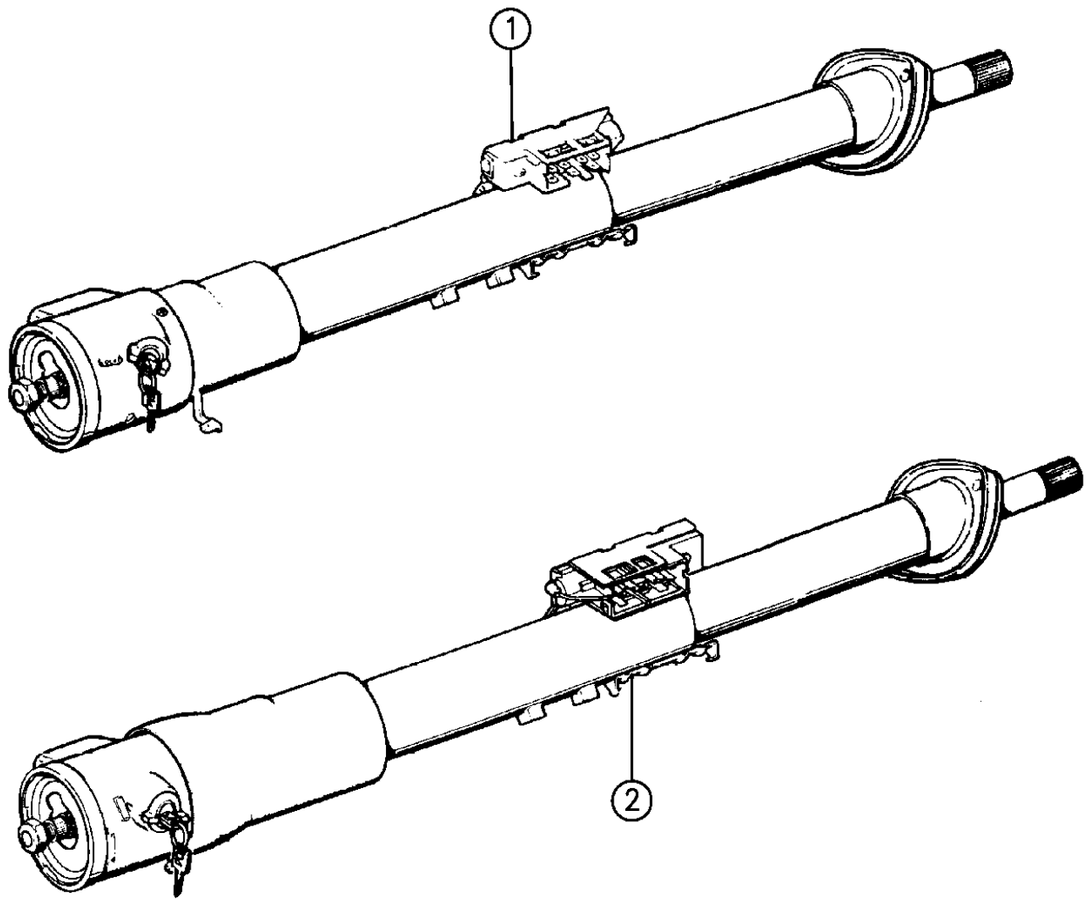

94J19 240

ITEM	PART NUMBER	QTY	BODY	MODEL	DESCRIPTION
1	5207 8609	1			COLUMN ASSEMBLY, w/Manual Transmission, w/o Tilt, w/o Intermittent Wipers
	5207 8610	1			COLUMN ASSEMBLY, w/Manual Transmission, w/o Tilt, w/ Intermittent Wipers
	5207 8612	1			COLUMN ASSEMBLY, w/Automatic Transmission, w/o Tilt, w/o Intermittent Wipers
	5207 8613	1			COLUMN ASSEMBLY, w/Automatic Transmission, w/o Tilt, W/ Intermittent Wipers
2	5207 8606	1			COLUMN ASSEMBLY, w/Manual Transmission, w/Tilt, w/ Intermittent Wipers
	5207 8611	1			COLUMN ASSEMBLY, w/Automatic Transmission, w/Tilt, w/ Intermittent Wipers

MODEL CODES:

72=2 DR Wagon
74=4 DR Wagon
77=Open Body 93" Whlbase
78=Open Body 103" Whlbase - Export
T=2WD
J,N=4WD
U=4WD (RHD)

BODY STYLES:

YJ=Wrangler (4X4) "S"
Weangler (4X4) SE
Wrangler (4X4) Sahara
Wrangler (4X4) Renegade
XJ=Cherokee SE
Cherokee Sport
Cherokee Country
ZJ=Grand Cherokee SE
Grand Cherokee Laredo
Grand Cherolee Limited
ZG=Grand Cherokee European
Y1=Wrangler
X1=Cherokee
Z1=Grand Cherokee
KDX=Vehicles

AR = Use as Required - = Non Illustrated Part P.A.R. = Paint as Required

HOUSING STEERING COLUMN UPPER W/FLOOR GEAR SHIFT, W/O TILT CHEROKEE (1994)
Figure 19-245

19–245

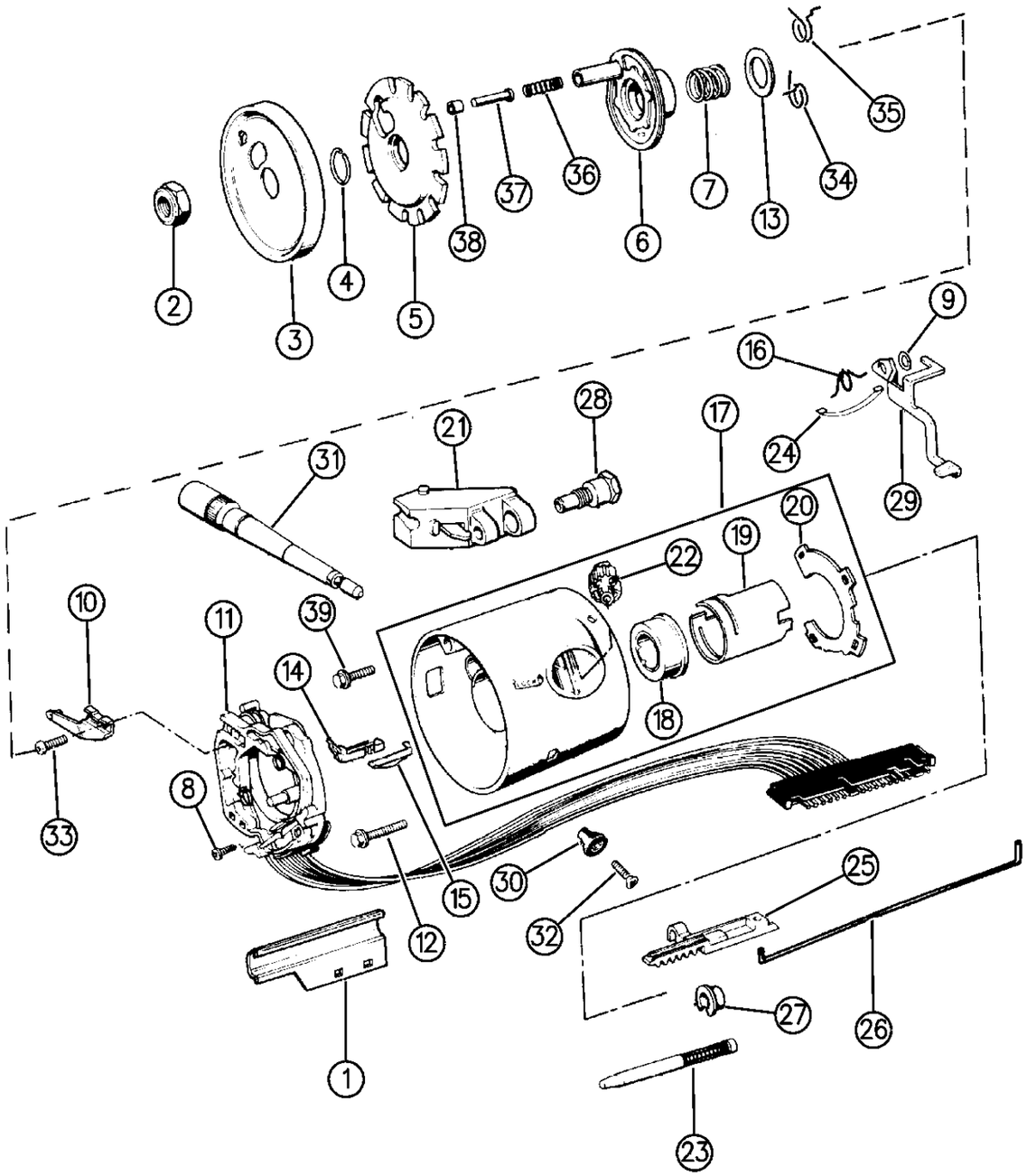

ITEM	PART NUMBER	QTY	BODY	MODEL	DESCRIPTION
1	8350 0225	1			PROTECTOR
2	J420 0414	1			NUT
3	J322 8743	1			COVER, Shift Lock
4	2925 062	2			RING
5	J812 7831	1			LOCK
6	J448 7711	1			CAM, Cancelling
7	8350 7097	1			SPRING
8	J448 8301	3			SCREW
9	J812 0186	1			WASHER, w/Manual Transmission
10	8351 0088	1			ARM, Switch Actuator
11	5600 7255	1			SWITCH, Turn Signal
12	J448 7761	4			SCREW
13	J320 8008	1			WASHER
14	J321 1423	1			SWITCH, Key Buzzer
15	J448 7713	1			Clip ***
16	J812 0185	1			SPRING, w/Manual Transmission
17	J813 4499	1			HOUSING ASSEMBLY
18	J812 7850	1			BEARING ASSEMBLY
19	J813 3537	1			BUSHING
20	J813 4703	1			RETAINER
21					SWITCH ASSEMBLY, Wipers
	5600 0031	1			w/o Intermittent Wipers
	5600 7298	1			w/Intermittent Wipers
22	J812 0097	1			SECTOR
23	J448 7897	1			BOLT
24	J448 7774	1			SPRING
25					RACK
	J812 1437	1			w/Manual Transmission
	8350 0216	1			w/Automatic Transmission
26					ROD
	8350 0238	1			w/Manual Transmission
	8350 0220	1			w/Automatic Transmission
27	J448 7777	1			WASHER
28	J813 3538	1			PIN
29	J813 3541	1			LEVER, w/Manual Transmission
30	5600 3149	1			KNOB, Hazard Warning
31					LEVER, Turn Signal
	5600 3867	1			w/o Intermittent Wipers, w/o Cruise Control
	5600 2951	1			w/Intermittent Wipers, w/o Cruise
	5600 4595	1			w/Intermittent Wipers, w/Cruise Control
32	3420 2670	1			SCREW
33	J400 1267	1			SCREW

MODEL CODES:

72=2 DR Wagon
74=4 DR Wagon
77=Open Body 93" Whlbase
78=Open Body 103" Whlbase - Export
T=2WD
J,N=4WD
U=4WD (RHD)

BODY STYLES:

YJ=Wrangler (4X4) "S"
Weangler (4X4) SE
Wrangler (4X4) Sahara
Wrangler (4X4) Renegade
XJ=Cherokee SE
Cherokee Sport
Cherokee Country
ZJ=Grand Cherokee SE
Grand Cherokee Laredo
Grand Cherolee Limited
ZG=Grand Cherokee European
Y1=Wrangler
X1=Cherokee
Z1=Grand Cherokee
KDX=Vehicles

AR = Use as Required - = Non Illustrated Part P.A.R. = Paint as Required

HOUSING STEERING COLUMN UPPER W/FLOOR GEAR SHIFT, W/O TILT CHEROKEE (1994)
Figure 19-245

19–245

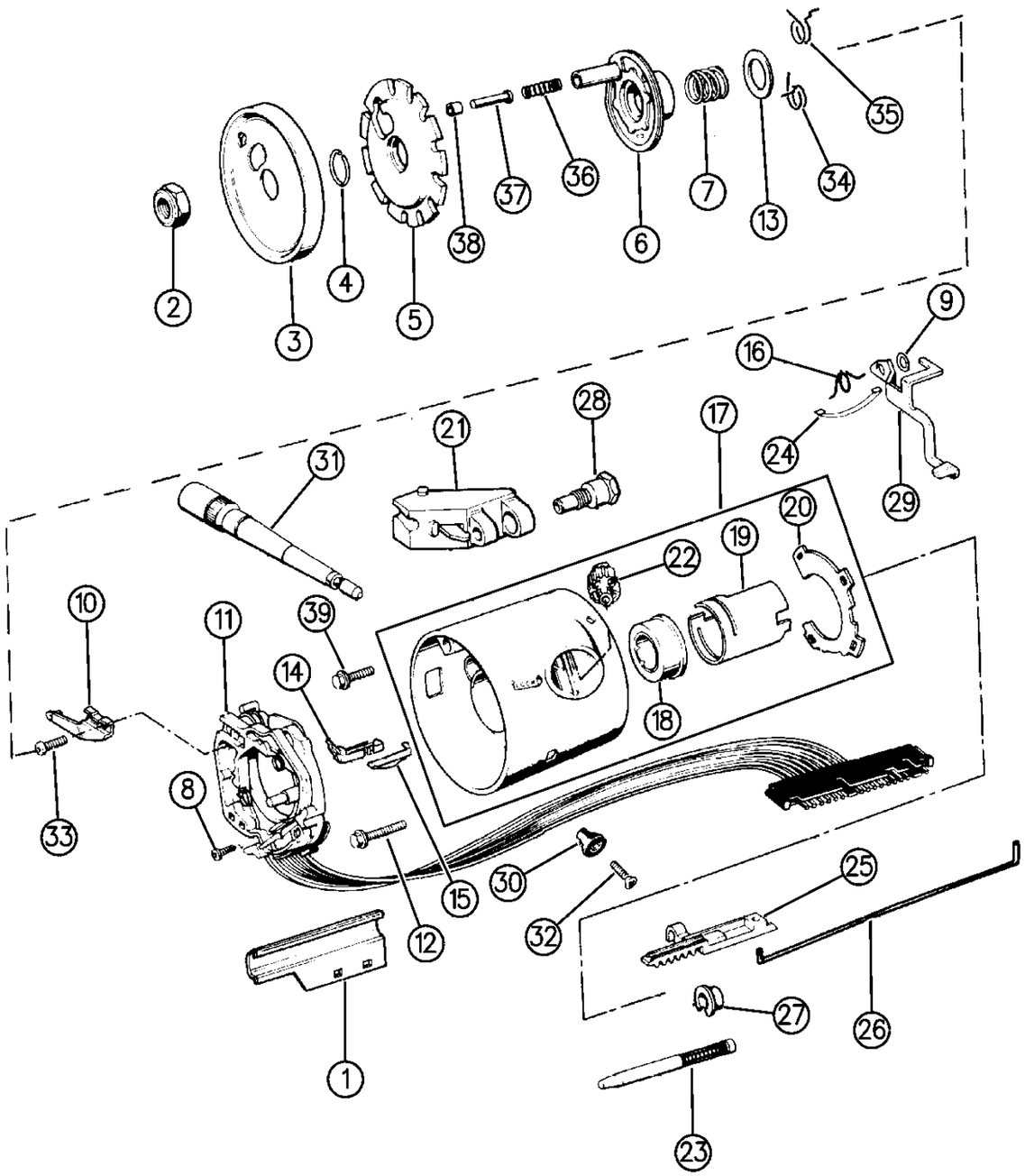

94J19 245

ITEM	PART NUMBER	QTY	BODY	MODEL	DESCRIPTION
34	J812 9317	1			SPRING, Left Lower
35	J812 9335	1			SPRING, Right Upper
36	5200 4402	1			SPRING
37	5200 4403	1			PIN
38	J318 7257	1			RETAINER
39	8350 2102	1			SCREW

MODEL CODES:

72=2 DR Wagon
74=4 DR Wagon
77=Open Body 93" Whlbase
78=Open Body 103" Whlbase - Export
T=2WD
J,N=4WD
U=4WD (RHD)

BODY STYLES:

YJ=Wrangler (4X4) "S"
Weangler (4X4) SE
Wrangler (4X4) Sahara
Wrangler (4X4) Renegade

XJ=Cherokee SE
Cherokee Sport
Cherokee Country

ZJ=Grand Cherokee SE
Grand Cherokee Laredo
Grand Cherolee Limited
ZG=Grand Cherokee European

Y1=Wrangler
X1=Cherokee
Z1=Grand Cherokee
KDX=Vehicles

AR = Use as Required - = Non Illustrated Part P.A.R. = Paint as Required

HOUSING STEERING COLUMN LOWER W/FLOOR GEAR SHIFT, W/O TILT CHEROKEE (1994)
Figure 19-250

19–250

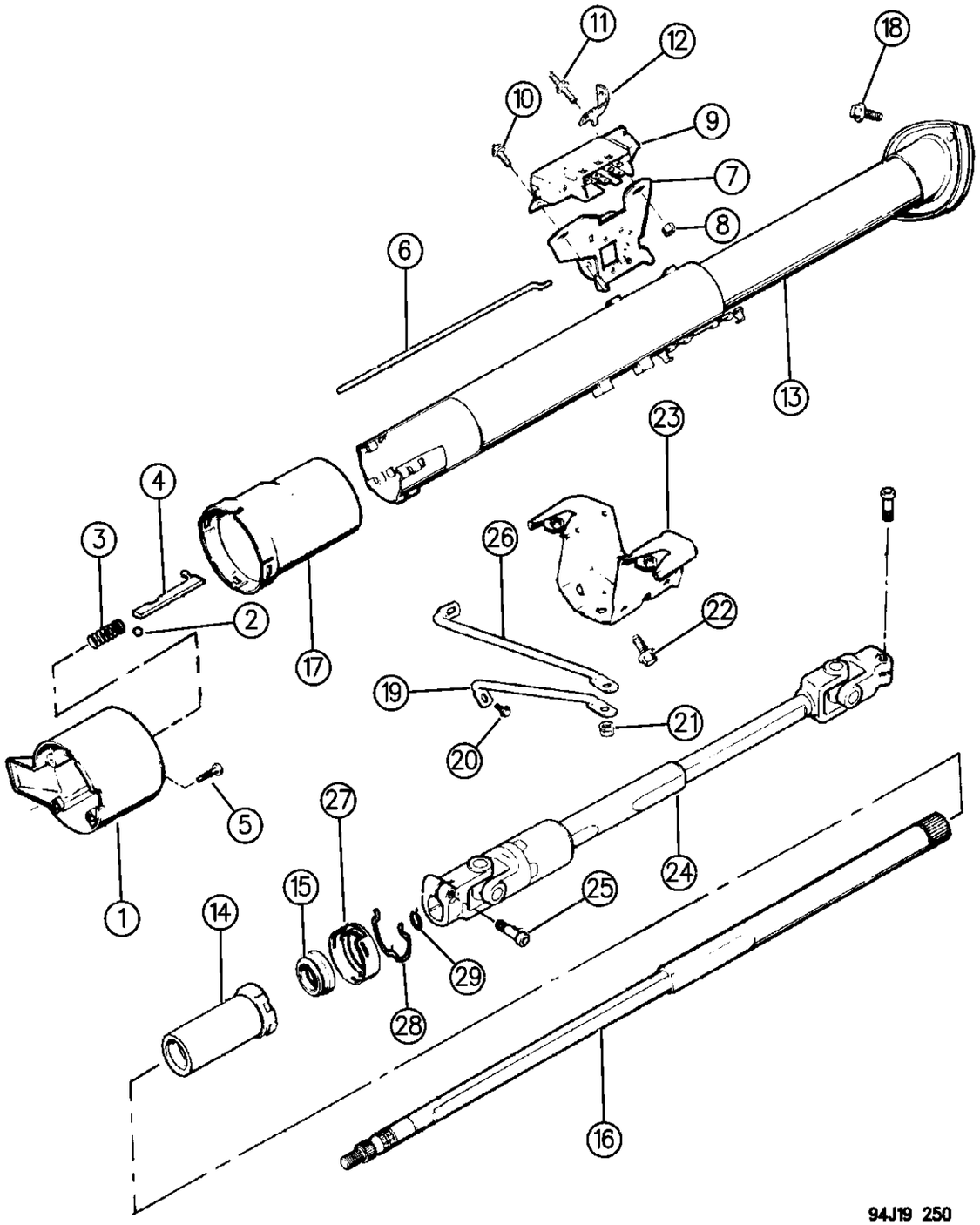

ITEM	PART NUMBER	QTY	BODY	MODEL	DESCRIPTION
1					BOWL, Shift
	J813 4497	1			w/Manual Transmission
	8350 0218	1			w/Automatic Transmission
2	8350 0217	1			BALL, w/Automatic Transmission
3	8350 0237	1			SPRING, w/Automatic Transmission
4	8350 0219	1			PIN, w/Automatic Transmission
5	J448 8301	3			SCREW
6	8350 3698	1			ROD, Dimmer Switch Actuator
7	5600 3406	1			SWITCH, Headlamp Dimmer
8	J012 0361	1			NUT
9	J325 0576	1			SWITCH, Ignition Lock
10	J448 7772	1			SCREW
11	J813 3546	1			STUD
12	8350 0224	1			BRACKET, w/Automatic Transmission
13	8350 2097	1			JACKET ASSEMBLY
14	J812 9486	1			ADAPTER
15	J448 6713	1			BEARING
16	8350 2100	1			SHAFT, Steering Column (upper)
17					SHROUD, Shift Bowl
	8350 1374	1			w/Manual Transmission
	8350 0221	1			w/Automatic Transmission
18	3420 1193	2			SCREW
19	5200 1375	1			SUPPORT, Rod (Short)
	5207 7751	1			w/RHD
20	1150 2685	2			BOLT
21	1150 2812	2			NUT
22	1150 2764	4			SCREW
23	5200 0399	1			BRACKET
24					SHAFT, Steering Column (Lower)
	4713 943	1			w/Power Steering
	5200 1947	1			w/o Power Steering
25		2			BOLT, M8x1.25-30 (Not Serv.)
26	5200 1376	1			SUPPORT, Rod (Long)
	5207 7750	2			w/RHD
27	J448 7743	1			RETAINER
28	J448 7739	1			CLIP
29	2925 062	1			RING

MODEL CODES:

72=2 DR Wagon
74=4 DR Wagon
77=Open Body 93" Whlbase
78=Open Body 103" Whlbase - Export
T=2WD
J,N=4WD
U=4WD (RHD)

BODY STYLES:

YJ=Wrangler (4X4) "S"
Weangler (4X4) SE
Wrangler (4X4) Sahara
Wrangler (4X4) Renegade
XJ=Cherokee SE
Cherokee Sport
Cherokee Country
ZJ=Grand Cherokee SE
Grand Cherokee Laredo
Grand Cherolee Limited
ZG=Grand Cherokee European
Y1=Wrangler
X1=Cherokee
Z1=Grand Cherokee
KDX=Vehicles

AR = Use as Required - = Non Illustrated Part P.A.R. = Paint as Required

« RETURN TO GROUP INDEX

HOUSING STEERING COLUMN UPPER W/FLOOR GEAR SHIFT, W/TILT CHEROKEE (1994)
Figure 19-255

19-255

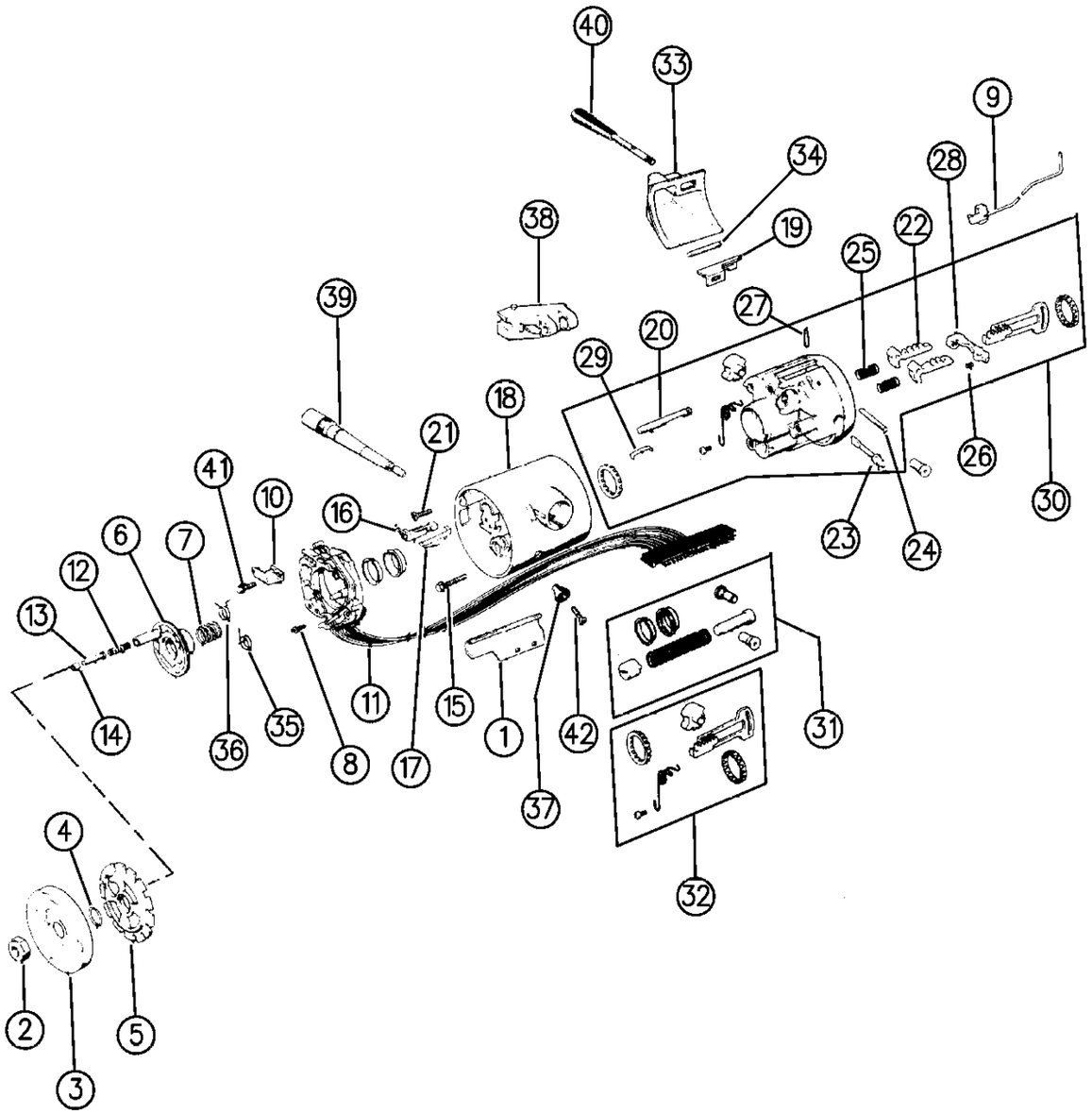

94J19 255

ITEM	PART NUMBER	QTY	BODY	MODEL	DESCRIPTION
1	8350 0225	1			PROTECTOR
2	J420 0414	1			NUT
3	J322 8743	1			COVER, Shift Lock
4	2925 062	2			RING
5	J812 7874	1			LOCK
6	J448 7816	1			CAM, Cancelling
7	3575 981	1			SPRING
8	J448 8301	3			SCREW
9					ACTUATOR ASSEMBLY, Ignition Switch ***
	8350 0239	1			w/Manual Transmission ***
	8350 0227	1			w/Automatic Transmission
10	8350 1575	1			ARM, Switch Actuator
11	5600 7255	1			SWITCH, Turn Signal
12	5200 4402	1			SPRING
13	5200 4403	1			PIN
14	J318 7257	1			RETAINER
15	J813 3572	3			SCREW
16	J321 1424	1			SWITCH, Key Buzzer
17	J448 7853	1			CLIP
18	4636 805	1			COVER, Steering Column Housing
19	4019 787	1			ACTUATOR, Dimmer Switch Rod
20	3467 377	1			BOLT
21	8350 2103	1			SCREW
22					SHOE
	J448 7828	1			Rt.
	J812 2716	1			Lt.
23	J813 4191	1			SHAFT
24	J448 7822	1			PIN
25	J448 7832	2			SPRING
26	J320 8047	1			SPRING
27	J320 8043	1			PIN
28	J813 3567	1			LEVER
29	J448 7831	1			SPRING
30	8350 1104	1			HOUSING, Steering Column
31	8351 0054	1			PARTS PACKAGE
32	8351 0055	1			RACK PACKAGE
33	J813 4704	1			CAP
34	J813 3565	1			PIN
35	J812 9317	1			SPRING, Lt. Lower
36	J812 9335	1			SPRING, Rt. Upper
37	5200 3425	1			KNOB, Hazard Warning
38					SWITCH ASSEMBLY, Wipers

MODEL CODES:

72=2 DR Wagon
74=4 DR Wagon
77=Open Body 93" Whlbase
78=Open Body 103" Whlbase - Export
T=2WD
J,N=4WD
U=4WD (RHD)

BODY STYLES:

YJ=Wrangler (4X4) "S"
Weangler (4X4) SE
Wrangler (4X4) Sahara
Wrangler (4X4) Renegade
XJ=Cherokee SE
Cherokee Sport
Cherokee Country
ZJ=Grand Cherokee SE
Grand Cherokee Laredo
Grand Cherolee Limited
ZG=Grand Cherokee European
Y1=Wrangler
X1=Cherokee
Z1=Grand Cherokee
KDX=Vehicles

AR = Use as Required - = Non Illustrated Part P.A.R. = Paint as Required

HOUSING STEERING COLUMN UPPER W/FLOOR GEAR SHIFT, W/TILT CHEROKEE (1994)
Figure 19-255

19-255

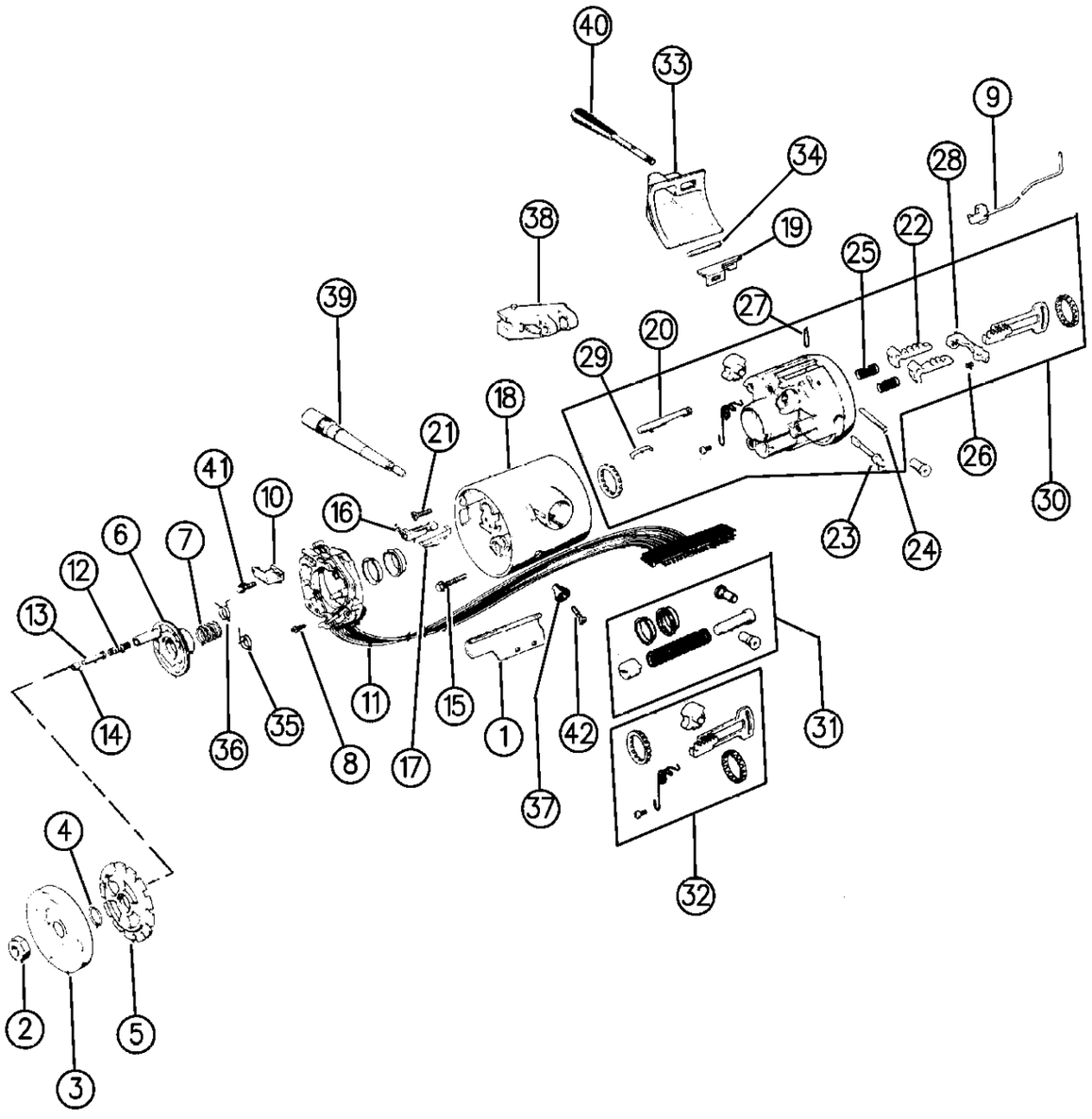

94J19 255

ITEM	PART NUMBER	QTY	BODY	MODEL	DESCRIPTION
	5600 0431	1			w/o Intermittent Wipers
	5600 7299	1			w/Intermittent Wipers
39					LEVER, Turn Signal
	5600 3867	1			w/o Intermittent Wipers, w/o Cruise Control
	5600 2951	1			w/Intermittent Wipers, w/o Cruise Control
	5600 4595	1			w/Intermittent Wipers, w/Cruise Control
40	5200 6207	1			LEVER, Wheel Release
41	J400 1267	1			SCREW
42	3420 2670	1			SCREW

MODEL CODES:

72=2 DR Wagon
74=4 DR Wagon
77=Open Body 93" Whlbase
78=Open Body 103" Whlbase - Export
T=2WD
J,N=4WD
U=4WD (RHD)

BODY STYLES:

YJ=Wrangler (4X4) "S"
Weangler (4X4) SE
Wrangler (4X4) Sahara
Wrangler (4X4) Renegade
XJ=Cherokee SE
Cherokee Sport
Cherokee Country
ZJ=Grand Cherokee SE
Grand Cherokee Laredo
Grand Cherolee Limited
ZG=Grand Cherokee European
Y1=Wrangler
X1=Cherokee
Z1=Grand Cherokee
KDX=Vehicles

AR = Use as Required - = Non Illustrated Part P.A.R. = Paint as Required

HOUSING STEERING COLUMN LOWER W/FLOOR GEAR SHIFT, W/TILT CHEROKEE (1994)
Figure 19-260

19–260

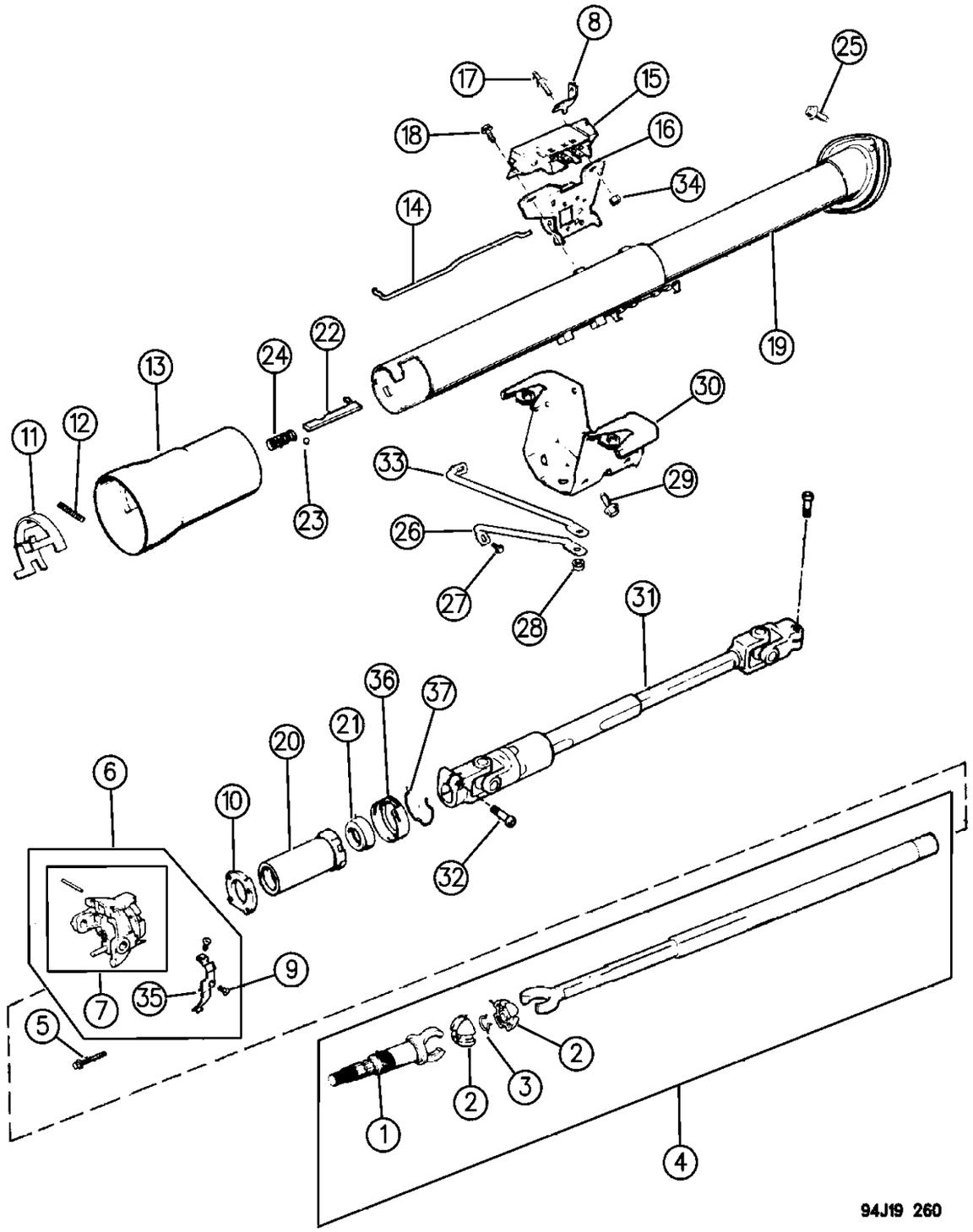

ITEM	PART NUMBER	QTY	BODY	MODEL	DESCRIPTION
1	J812 8888	1			SHAFT, Steering Column Upper
2	4147 365	2			SPHERE
3	4147 365	1			SPRING
4	8350 2101	1			SHAFT ASSEMBLY, Steering Column Upper
5	J448 7867	4			SCREW
6	8350 1109	1			SUPPORT, w/Manual Transmission
7	8350 1369	1			SUPPORT, w/Automatic Transmission
8	8350 0224	1			BRACKET, w/Automatic Transmission
9	J320 8210	2			SCREW, w/Manual Transmission
10	J448 7860	1			PLATE
11	J812 8154	1			LEVER
12	4019 298	1			SPRING, w/Automatic Transmission
13					SHROUD, Shift Bowl (P.A.R.)
	8350 0359	1			w/Manual Transmission
	8350 0234	1			w/Automatic Transmision
14	8350 0233	1			ROD, Dimmer Switch Actuator
15	J325 0575	1			SWITCH, Ignition Lock
16	5600 3406	1			SWITCH, Headlamp Dimmer
17	J813 3546	1			STUD
18	J448 7772	1			SCREW
19	8350 2099	1			JACKET ASSEMBLY
20	J812 9486	1			ADAPTER
21	J448 6713	1			BEARING
22	8350 0231	1			PIN, w/Automatic Transmission
23	8350 0232	1			PIN, w/Automatic Transmission
24	8350 0235	1			SPRING, w/Automatic Transmission
25	3420 1193	2			SCREW
26	5200 1375	1			SUPPORT, Rod (Short)
	5502 7527	1			w/RHD
27	1150 2685	2			BOLT
28	1150 2812	2			NUT
29	1150 2764	4			SCREW
30	5200 0399	1			BRACKET
31					SHAFT, Steering Column Lower
	4713 943	1			w/Power Steering
	5200 1947	1			w/o Power Steering
32		2			BOLT, M8x1.25-30 (Not Serv.)
33	5200 1376	1			SUPPORT, Rod (Long)
34	J012 0361	1			NUT
35	J813 3569	1			PLATE, w/Manual Transmission
36	J448 7743	1			RETAINER
37	J448 7739	1			CLIP

MODEL CODES:

72=2 DR Wagon
74=4 DR Wagon
77=Open Body 93" Whlbase
78=Open Body 103" Whlbase - Export
T=2WD
J,N=4WD
U=4WD (RHD)

BODY STYLES:

YJ=Wrangler (4X4) "S"
Weangler (4X4) SE
Wrangler (4X4) Sahara
Wrangler (4X4) Renegade
XJ=Cherokee SE
Cherokee Sport
Cherokee Country
ZJ=Grand Cherokee SE
Grand Cherokee Laredo
Grand Cherolee Limited
ZG=Grand Cherokee European
Y1=Wrangler
X1=Cherokee
Z1=Grand Cherokee
KDX=Vehicles

AR = Use as Required - = Non Illustrated Part P.A.R. = Paint as Required

« RETURN TO GROUP INDEX

COLUMN ASSEMBLY, STEERING W/COLUMN GEAR SHIFT CHEROKEE (1994)
Figure 19-265

19–265

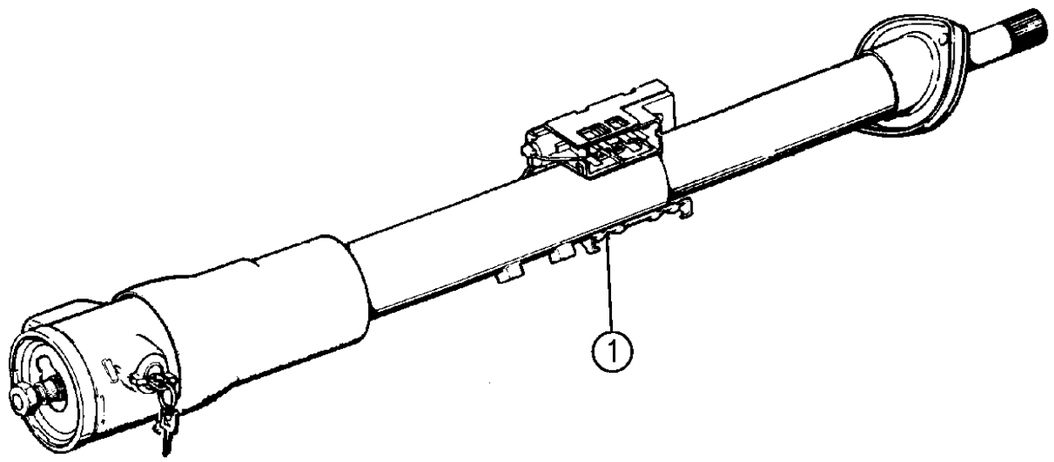

94J19 265

ITEM	PART NUMBER	QTY	BODY	MODEL	DESCRIPTION
1	5207 8614	1			COLUMN ASSEMBLY, w/Automatic Transmission, w/Tilt, w/ Intermittent Wipers

MODEL CODES:

72=2 DR Wagon
74=4 DR Wagon
77=Open Body 93" Whlbase
78=Open Body 103" Whlbase - Export
T=2WD
J,N=4WD
U=4WD (RHD)

BODY STYLES:

YJ=Wrangler (4X4) "S"
Weangler (4X4) SE
Wrangler (4X4) Sahara
Wrangler (4X4) Renegade
XJ=Cherokee SE
Cherokee Sport
Cherokee Country
ZJ=Grand Cherokee SE
Grand Cherokee Laredo
Grand Cherolee Limited
ZG=Grand Cherokee European
Y1=Wrangler
X1=Cherokee
Z1=Grand Cherokee
KDX=Vehicles

AR = Use as Required - = Non Illustrated Part P.A.R. = Paint as Required

HOUSING STEERING COLUMN UPPER W/COLUMN GEAR SHIFT, W/TILT CHEROKEE (1994)
Figure 19-270

19–270

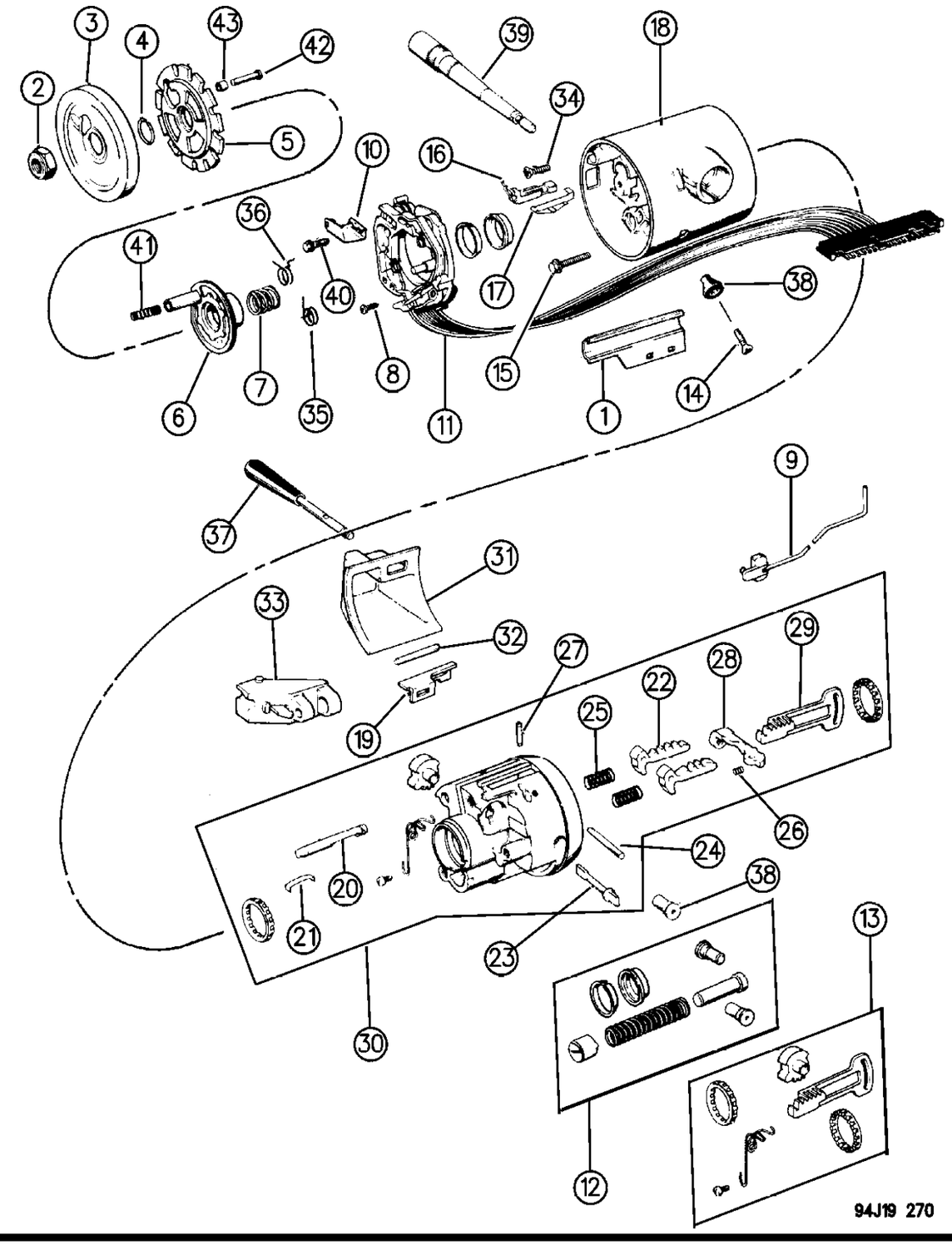

ITEM	PART NUMBER	QTY	BODY	MODEL	DESCRIPTION
1	8350 2566	1			PROTECTOR
2	J420 0414	1			NUT
3		1			COVER, Shift Lock (Not Required)
4	2925 062	2			RING
5	J812 7874	1			LOCK
6	J448 7816	1			CAM, Cancelling
7	3575 981	1			SPRING
8	J448 8301	3			SCREW
9	8350 2573	1			ACTUATOR ASSEMBLY, Ignition Switch ***
10	8350 1575	1			ARM, Switch Actuator
11	5600 7255	1			SWITCH, Turn Signal
12	8351 0054	1			PARTS PACKAGE
13	8351 0055	1			RACK PACKAGE
14	3420 2670	1			SCREW
15	J813 3572	3			SCREW
16	J321 1424	1			SWITCH, Key Buzzer
17	J448 7853	1			CLIP
18	8350 2096	1			COVER, Steering Column Housing
19	4019 787	1			ACTUATOR, Dimmer Switch Rod
20	3467 377	1			BOLT
21	J448 7831	1			SPRING
22					SHOE
	8350 2583	1			Lt.
	J448 7828	1			Rt.
23	J813 4191	1			SHAFT
24	J448 7822	1			PIN
25	J448 7832	2			SPRING
26	J320 8047	1			SPRING ***
27	J320 8043	1			PIN
28	J813 3567	1			LEVER
29	8351 0055	1			RACK
30	8350 2582	1			HOUSING, Steering Column
31	J813 4704	1			CAP
32	J813 3565	1			PIN
33	5600 0033	1			SWITCH ASSEMBLY, Intermittent Wipers
34	8350 2103	1			SCREW
35	J812 9317	1			SPRING, Left Lower
36	J812 9335	1			SPRING, Right Upper
37	5200 6207	1			LEVER, Wheel Release
38	5600 3149	1			KNOB, Hazard Warning
39					LEVER, Turn Signal
	5600 2951	1			w/o Cruise Control

MODEL CODES:

72=2 DR Wagon
74=4 DR Wagon
77=Open Body 93" Whlbase
78=Open Body 103" Whlbase - Export
T=2WD
J,N=4WD
U=4WD (RHD)

BODY STYLES:

YJ=Wrangler (4X4) "S"
Weangler (4X4) SE
Wrangler (4X4) Sahara
Wrangler (4X4) Renegade
XJ=Cherokee SE
Cherokee Sport
Cherokee Country
ZJ=Grand Cherokee SE
Grand Cherokee Laredo
Grand Cherolee Limited
ZG=Grand Cherokee European
Y1=Wrangler
X1=Cherokee
Z1=Grand Cherokee
KDX=Vehicles

AR = Use as Required - = Non Illustrated Part P.A.R. = Paint as Required

HOUSING STEERING COLUMN UPPER W/COLUMN GEAR SHIFT, W/TILT CHEROKEE (1994)
Figure 19-270

19–270

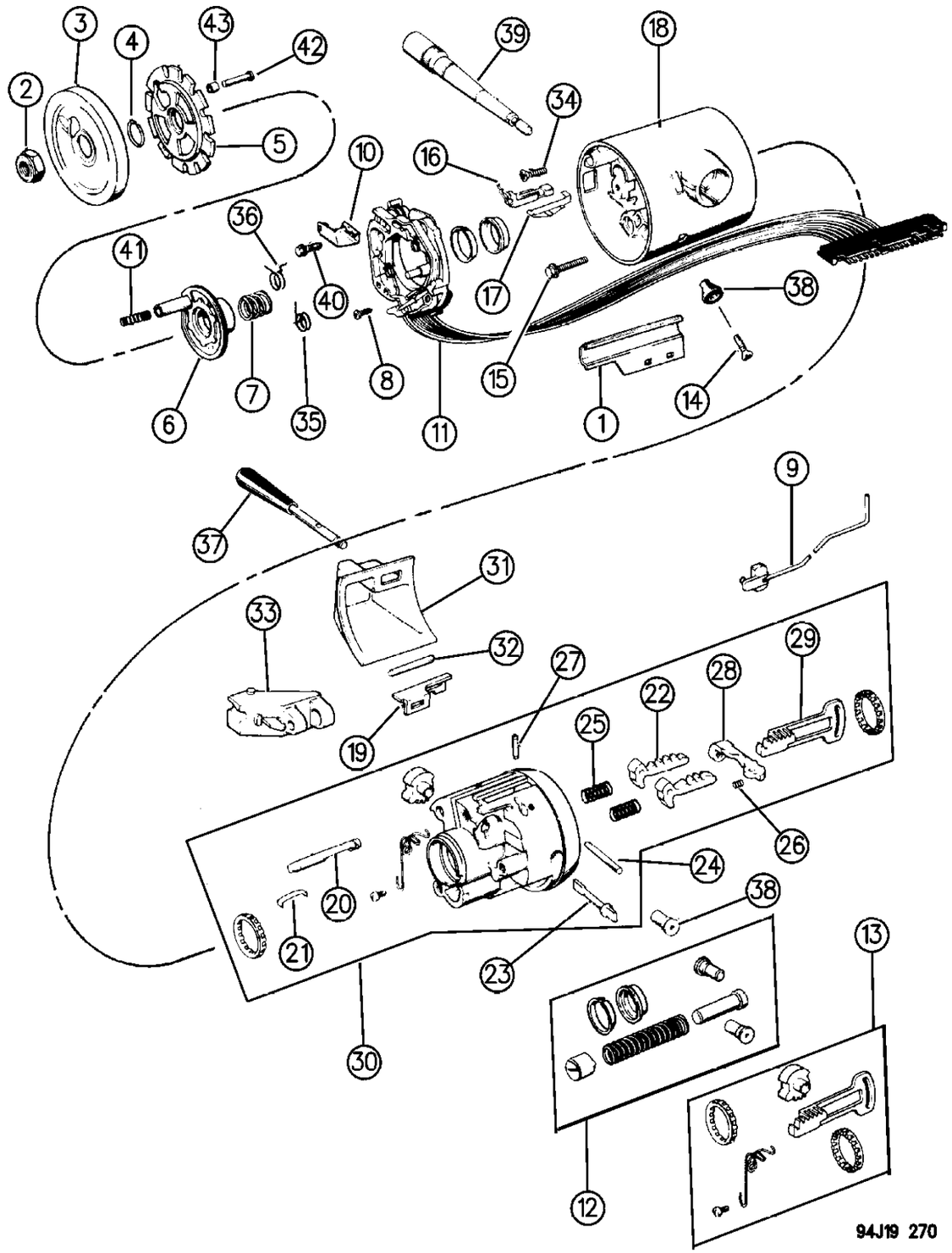

ITEM	PART NUMBER	QTY	BODY	MODEL	DESCRIPTION
	5600 0034	1			w/Cruise Control
40	J400 1267	1			SCREW
41	5200 4402	1			SPRING
42	5200 4403	1			PIN
43	J318 7257	1			RETAINER

MODEL CODES:

72=2 DR Wagon
74=4 DR Wagon
77=Open Body 93" Whlbase
78=Open Body 103" Whlbase - Export
T=2WD
J,N=4WD
U=4WD (RHD)

BODY STYLES:

YJ=Wrangler (4X4) "S"
Weangler (4X4) SE
Wrangler (4X4) Sahara
Wrangler (4X4) Renegade
XJ=Cherokee SE
Cherokee Sport
Cherokee Country
ZJ=Grand Cherokee SE
Grand Cherokee Laredo
Grand Cherolee Limited
ZG=Grand Cherokee European
Y1=Wrangler
X1=Cherokee
Z1=Grand Cherokee
KDX=Vehicles

AR = Use as Required - = Non Illustrated Part P.A.R. = Paint as Required

HOUSING STEERING COLUMN LOWER W/COLUMN GEAR SHIFT, W/TILT CHEROKEE (1994)
Figure 19-275

19–275

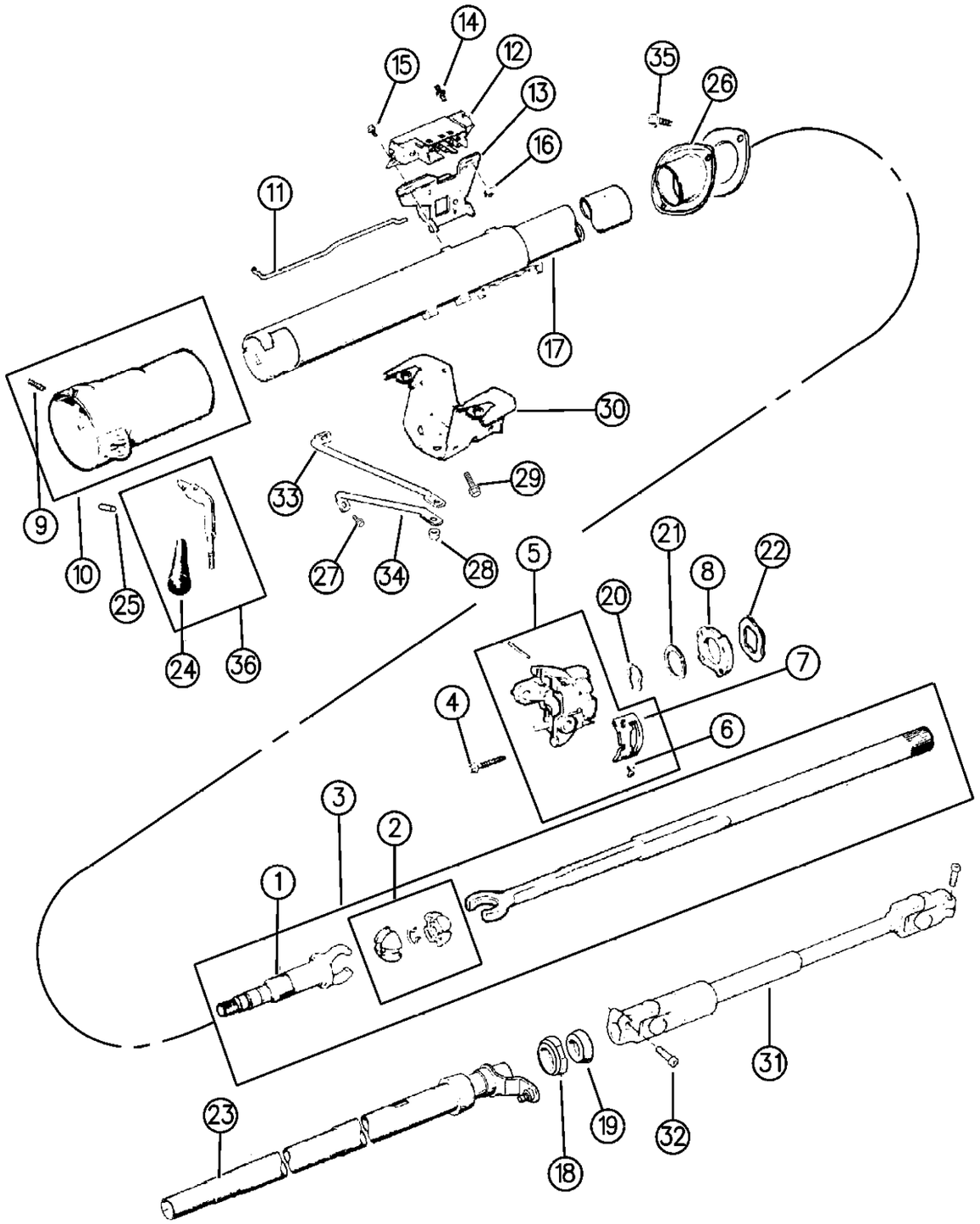

ITEM	PART NUMBER	QTY	BODY	MODEL	DESCRIPTION
1	J812 8888	1			SHAFT, Steering Column Upper
2	4147 365	1			SPHERE
3	8350 2101	1			SHAFT ASSEMBLY, Steering Column Upper
4	J448 7867	4			SCREW
5	8350 4415	1			SUPPORT ***
6	J320 8210	2			SCREW
7	8350 4412	1			GATE, Shift Lever
8	J448 7860	1			PLATE
9	8350 2107	1			SPRING
10	8350 3478	1			SHROUD, Shift Bowl
11	8350 2568	1			ROD, Dimmer Switch Actuator
12	J325 0575	1			SWITCH, Ignition Lock
13	5600 3406	1			SWITCH, Headlamp Dimmer
14	J813 3546	1			STUD
15	J448 7772	1			SCREW
16	J012 0361	1			NUT
17	8350 2557	1			JACKET ASSEMBLY
18	8350 2561	1			ADAPTER
19	J448 6713	1			BEARING
20	J448 7864	1			RING, Shift Tube Retaining
21	J448 7872	1			WASHER, Thrust
22	J448 7873	1			WASHER, Wave
23	8350 2558	1			TUBE ASSEMBLY, Shift
24	J321 6462	1			KNOB
25	J400 3925	1			PIN
26	8350 2563	1			PLATE
27	1150 2685	2			BOLT
28	1150 2812	2			NUT
29	1150 2764	4			SCREW
30	5200 0399	1			BRACKET
31					SHAFT, Steering Column Lower
	5200 1947	1			w/o Power Steering
	4713 943	1			w/Power Steering
32		2			BOLT, M8x1.25-30 (Not Serv.)
33	5200 1376	1			SUPPORT, Rod (Long)
34	5200 1375	1			SUPPORT, Rod (Short)
35	3420 1193	2			SCREW
36	5200 6616	1			LEVER, Gear Shift

MODEL CODES:

72=2 DR Wagon
74=4 DR Wagon
77=Open Body 93" Whlbase
78=Open Body 103" Whlbase - Export
T=2WD
J,N=4WD
U=4WD (RHD)

BODY STYLES:

YJ=Wrangler (4X4) "S"
Weangler (4X4) SE
Wrangler (4X4) Sahara
Wrangler (4X4) Renegade
XJ=Cherokee SE
Cherokee Sport
Cherokee Country
ZJ=Grand Cherokee SE
Grand Cherokee Laredo
Grand Cherolee Limited
ZG=Grand Cherokee European
Y1=Wrangler
X1=Cherokee
Z1=Grand Cherokee
KDX=Vehicles

AR = Use as Required - = Non Illustrated Part P.A.R. = Paint as Required

« RETURN TO GROUP INDEX

COLUMN, STEERING UPPER AND LOWER CHEROKEE (1995-96)
Figure 19-278

19-278A

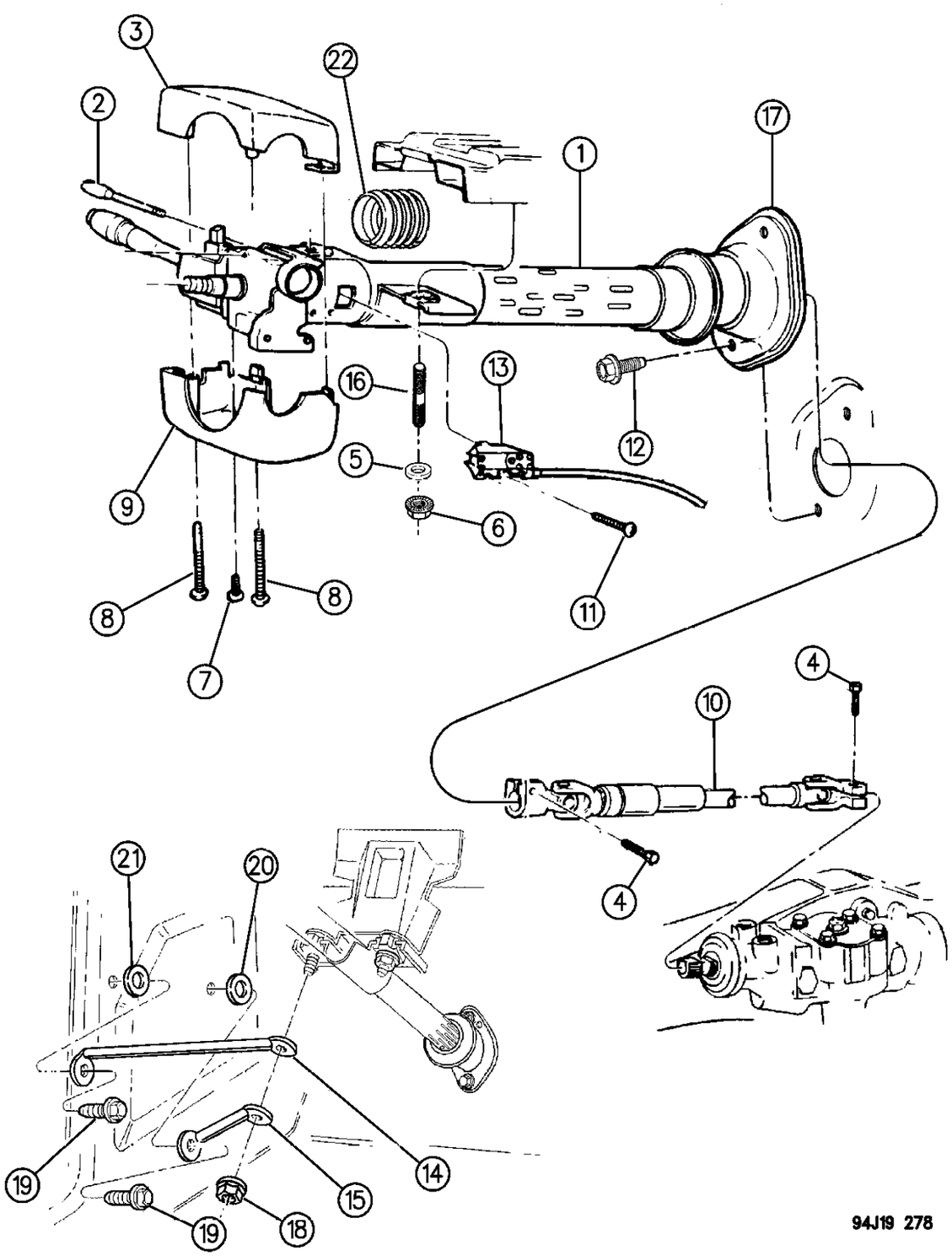

ITEM	PART NUMBER	QTY	BODY	MODEL	DESCRIPTION
1					COLUMN, Steering Service Assy.
	5208 0002	1			w/o Tilt, w/o Deluxe Wipers (JHA)
	5208 0003	1			w/o Tilt, w/Deluxe Wipers (JHA)
	5207 9001	1			w/Tilt
2	4470 103	1			LEVER, Tilt Release
3					SHROUD, Upper Lock Hsg.
	5511 4651	1			w/o Tilt
	5511 4650	1			w/Tilt
4	6502 441	2			SCREW, M8x1.25-30
5		AR			WASHER, (Not Serv.)
6		2			NUT, Stud M6x1.0 (Not Serv.)
-	5274 178	1			CLIP, Ground
7		1			SCREW, (Not Serv.) .164-32x1.00
8	4470 105	2			SCREW, M4.55x1.59x15.50
9					SHROUD, Lower Lock Hsg.
	5511 5557	1			w/Foam Key Pad, w/Depressed Surface Area
10	5207 8556	1			SHAFT, Intermediate Assy.
11		2			SCREW, (Not Serv.) .164-32x.500
12	3420 1193	2			SCREW
13		1			CABLE, Park Interlock (See Grp. 21)
14					ROD, Column Support Long
	5200 1376	1			LHD
	5207 7750	1			RHD
15					ROD, Column Support Short
	5207 9162	1			LHD
	5207 9163	1			RHD
16	6502 390	2			STUD, M6x1.00x43.80
17	4690 311	1			PLATE AND SEAL, Column Lower ***
18		2			NUT, M6x1.0 (Not Serv.)
19	3420 1540	2			SCREW, w/Washer M10x1.50x30.00
20		1			SEAL, (Not Serv.)
21	5500 5519	1			WASHER, Sealing M10-25.00x3.0
22					FILLER, Gap Hider
	5511 5657	1			1994-95
	5531 4947	1			1996

MODEL CODES:

72=2 DR Wagon
74=4 DR Wagon
77=Open Body 93" Whlbase
78=Open Body 103" Whlbase - Export
T=2WD
J,N=4WD
U=4WD (RHD)

BODY STYLES:

YJ=Wrangler (4X4) "S"
Weangler (4X4) SE
Wrangler (4X4) Sahara
Wrangler (4X4) Renegade
XJ=Cherokee SE
Cherokee Sport
Cherokee Country
ZJ=Grand Cherokee SE
Grand Cherokee Laredo
Grand Cherolee Limited
ZG=Grand Cherokee European
Y1=Wrangler
X1=Cherokee
Z1=Grand Cherokee
KDX=Vehicles

AR = Use as Required - = Non Illustrated Part P.A.R. = Paint as Required

« RETURN TO GROUP INDEX

COLUMN, STEERING UPPER AND LOWER GRAND CHEROKEE (ZJ)
Figure 19-280

19-280A

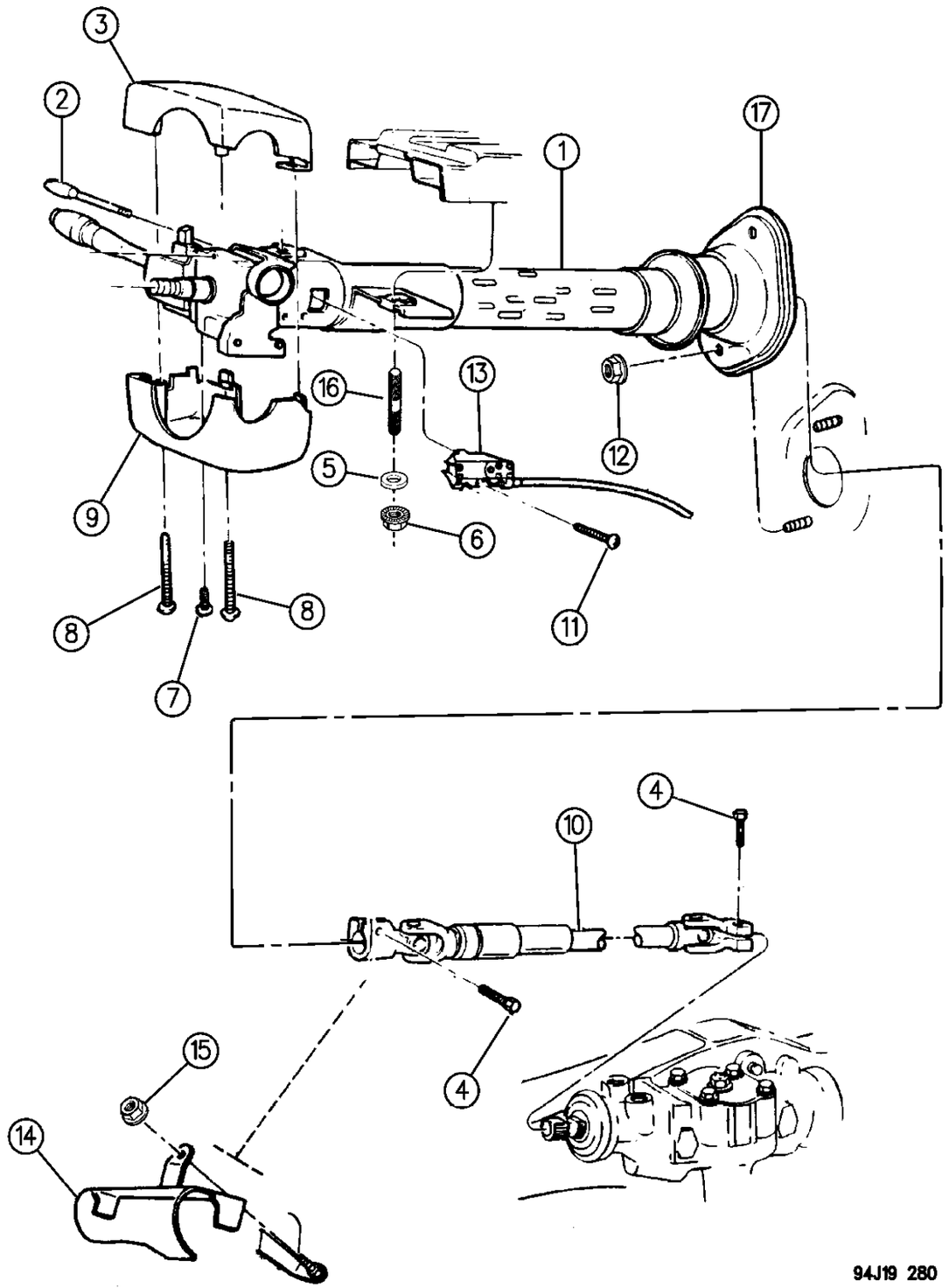

ITEM	PART NUMBER	QTY	BODY	MODEL	DESCRIPTION
1					COLUMN, Steering Service Assy.
	4762 587	1			w/o Tilt Steering
	4762 586	1			w/Tilt Steering 1994-95 (Up To 1-6-95)
	4864 354	1			w/Tilt Steering 1995-6 (After 1-6-95) w/o SBC (Speed Proportional Steering)
	4798 975	1			w/Tilt Steering 1996 w/SBC (Speed Proportional Steeting)
-	5602 7333	1			SENSOR, w/SBC (Speed Proportional Steering)
2	4470 103	1			LEVER, Tilt Release
3					SHROUD, Upper Lock Hsg.
	5511 4651	1			w/o Tilt Steering
	5511 4650	1			w/Tilt Steering
4		2			SCREW, M8x1.25-30 (Not Serv.)
5		2			WASHER, (Not Serv.)
6	6501 730	2			NUT, Stud M6x1.00
-	5274 178	1			CLIP, Ground
7		1			SCREW, (Not Serv.)
8	4470 105	2			SCREW, M4.55x1.59x15.50
9					SHROUD, Lower Lock Hsg.
	5511 4965	1			w/Rubber Key Pad
	5511 5557	1			w/Foam Key Pad, w/Depressed Surface Area
10					SHAFT, Intermediate Assy.
	5207 8414	1			1994-95 (Up To 1-6-95)
	5207 9050	1			1995-96 (After 1-6-95)
11		2			SCREW, (Not Serv.)
12	3420 1711	2			NUT, M8x1.25
13		1			CABLE, Park Interlock (See Grp. 21)
14	5208 7787	1			SHIELD, Intermediate Shaft
	5305 4107	1	ZG		
15	3420 1711	1			NUT, M8x1.25
16	6502 390	2			STUD, M6x1.00x43.80
17	5207 8854	1			PLATE AND SEAL, Column Lower, w/3 Hole Mounting 1994-96 ***
	5207 7932	1			w/2 Hole Mounting (Early 1994)

MODEL CODES:

72=2 DR Wagon
74=4 DR Wagon
77=Open Body 93" Whlbase
78=Open Body 103" Whlbase - Export
T=2WD
J,N=4WD
U=4WD (RHD)

BODY STYLES:

YJ=Wrangler (4X4) "S"
Weangler (4X4) SE
Wrangler (4X4) Sahara
Wrangler (4X4) Renegade
XJ=Cherokee SE
Cherokee Sport
Cherokee Country
ZJ=Grand Cherokee SE
Grand Cherokee Laredo
Grand Cherolee Limited
ZG=Grand Cherokee European
Y1=Wrangler
X1=Cherokee
Z1=Grand Cherokee
KDX=Vehicles

AR = Use as Required - = Non Illustrated Part P.A.R. = Paint as Required

« RETURN TO GROUP INDEX

GEAR, STEERING W/O POWER STEERING WRANGLER (YJ)
Figure 19-310

19-310A

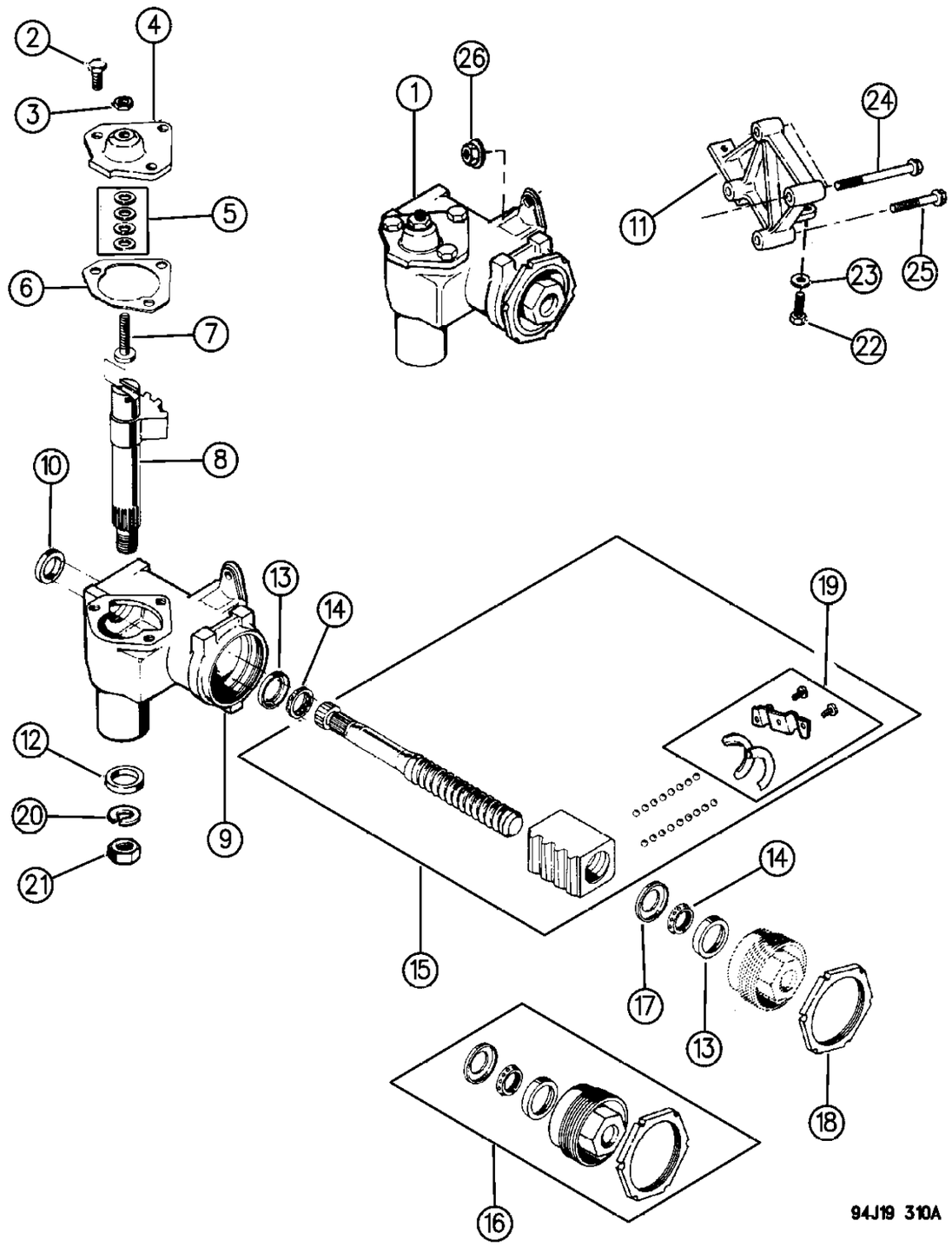

ITEM	PART NUMBER	QTY	BODY	MODEL	DESCRIPTION
1	5200 0089	1			GEAR, Steering
2	J099 2295	3			BOLT
3	S027 2121	1			NUT
4	J448 6846	1			COVER, Gear
5	J094 0521	1			SHIM PACKAGE
6	J094 0522	1			GASKET
7	J448 6135	1			SCREW
8	J812 0221	1			SHAFT
9	8350 2351	1			HOUSING
10	J448 6141	1			SEAL
11					BRACKET
	5200 4409	1			1994
	5208 7962	1			1995
12	J448 6140	1			SEAL
13	J320 0492	2			CLIP
14	J320 0491	2			BEARING
15	8350 0248	1			SHAFT
16	8350 2352	1			ADJUSTER
17	J320 0493	1			RETAINER
18	J094 0533	1			NUT
19	J320 5677	1			GUIDE
20	S010 3336	1			WASHER
21	J320 0501	1			NUT
22	6034 140	2			BOLT, .500-13x2.5
23	J400 5397	2			WASHER
24					BOLT
	J400 7238	1			5.0" length
	J400 5613	1			5.5" length
25	J400 7250	2			BOLT
26	J400 7043	1			NUT

MODEL CODES:

72=2 DR Wagon
74=4 DR Wagon
77=Open Body 93" Whlbase
78=Open Body 103" Whlbase - Export
T=2WD
J,N=4WD
U=4WD (RHD)

BODY STYLES:

YJ=Wrangler (4X4) "S"
Weangler (4X4) SE
Wrangler (4X4) Sahara
Wrangler (4X4) Renegade
XJ=Cherokee SE
Cherokee Sport
Cherokee Country
ZJ=Grand Cherokee SE
Grand Cherokee Laredo
Grand Cherolee Limited
ZG=Grand Cherokee European
Y1=Wrangler
X1=Cherokee
Z1=Grand Cherokee
KDX=Vehicles

AR = Use as Required - = Non Illustrated Part P.A.R. = Paint as Required

« RETURN TO GROUP INDEX

GEAR, POWER STEERING WRANGLER, CHEROKEE, GRAND CHEROKEE (ZJ)
Figure 19-320

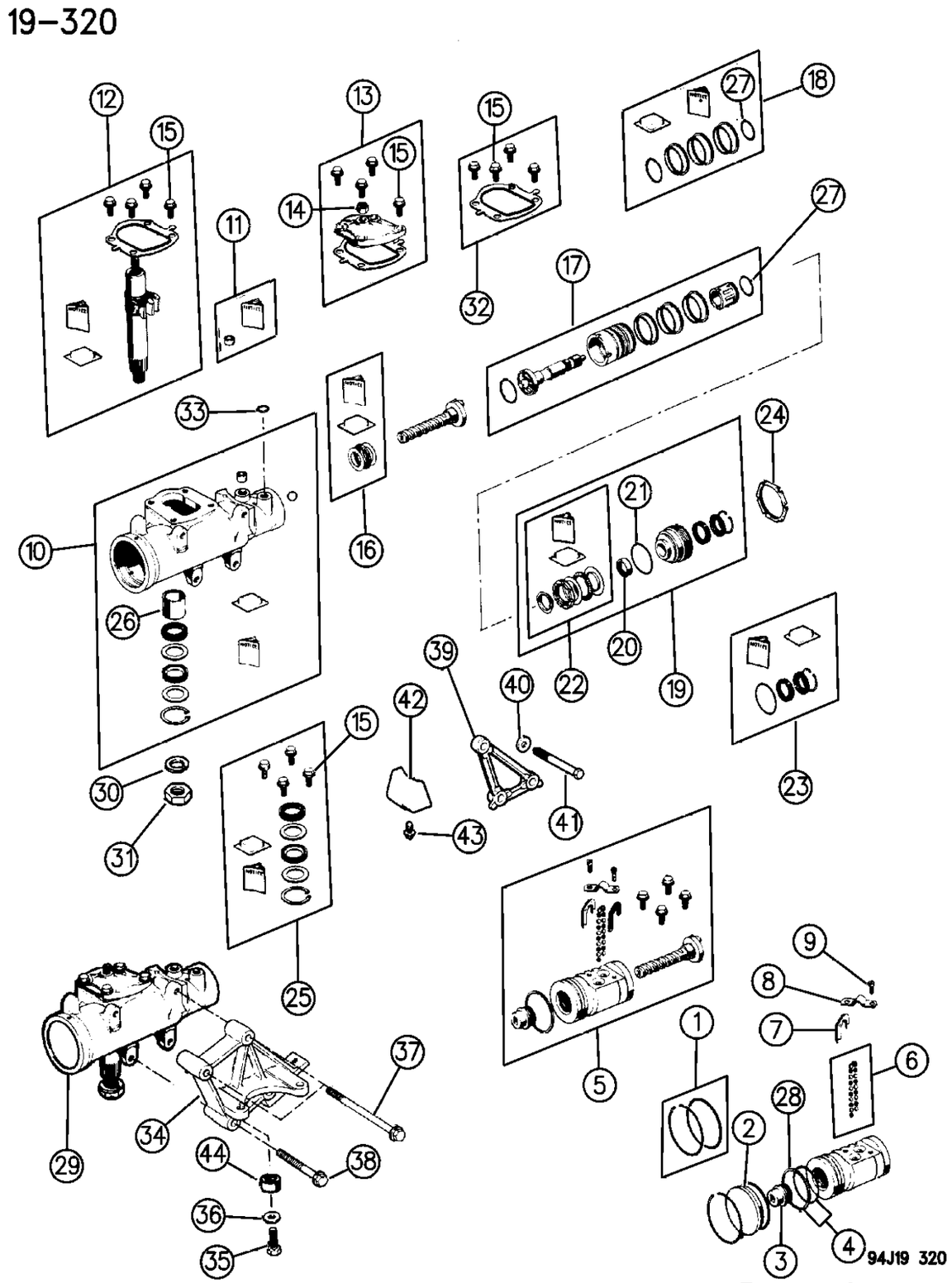

ITEM	PART NUMBER	QTY	BODY	MODEL	DESCRIPTION
1	J812 5037	1			SEAL PACKAGE, Valve Ring
	4728 248	1	ZJ		
2	8350 2251	1			PLUG, Housing End
	4333 996	1	ZJ		
3	J812 7965	1			PLUG, Rack Piston
	4728 250	1	ZJ		
4	J812 5039	1			SEAL PACKAGE
	4728 249	1	ZJ		
5	4713 061	1			RACK PACKAGE, Includes Piston
6	J320 4836	1			BALL PACKAGE, Rack/Piston
7	J094 0707	1			GUIDE
8	J320 4812	1			CLAMP
9	J320 7057	2			SCREW
10					HOUSING, Steering Gear
	J813 2537	1	YJ		
	J813 2579	1			
11	4637 937	1			VALVE
12					SHAFT
	3893 555	1	YJ		
	3491 343	1	ZJ		
13	J812 5033	1			COVER, Gear
14	J320 4818	1			NUT
15	J812 4191	4			BOLT
16	J812 7645	1			BEARING PACKAGE
17					VALVE PACKAGE
	4713 066	1	YJ		
	4637 937	1			
18	J320 4833	1			SEAL PACKAGE
19	J813 0152	1			BEARING PACKAGE
20	J813 0142	1			BEARING
21	J812 6247	1			O-RING
22	J813 0155	1			PLUG, Adjusting
23	J813 0157	1			SEAL PACKAGE
24	J812 8427	1			NUT
25	J813 4568	1			SEAL PACKAGE
26	J448 7154	1			BEARING
27	8350 1039	1			O-RING
28	J320 4814	1			RING
29					GEAR, STEERING
	5203 8003	1	YJ		w/LHD
	5203 8002	1	XJ		w/LHD, 1994
	5203 8408	1	XJ		w/LHD, 1995

MODEL CODES:

72=2 DR Wagon
74=4 DR Wagon
77=Open Body 93" Whlbase
78=Open Body 103" Whlbase - Export
T=2WD
J,N=4WD
U=4WD (RHD)

BODY STYLES:

YJ=Wrangler (4X4) "S"
Weangler (4X4) SE
Wrangler (4X4) Sahara
Wrangler (4X4) Renegade
XJ=Cherokee SE
Cherokee Sport
Cherokee Country
ZJ=Grand Cherokee SE
Grand Cherokee Laredo
Grand Cherolee Limited
ZG=Grand Cherokee European
Y1=Wrangler
X1=Cherokee
Z1=Grand Cherokee
KDX=Vehicles

AR = Use as Required - = Non Illustrated Part P.A.R. = Paint as Required

GEAR, POWER STEERING WRANGLER, CHEROKEE, GRAND CHEROKEE (ZJ)
Figure 19-320

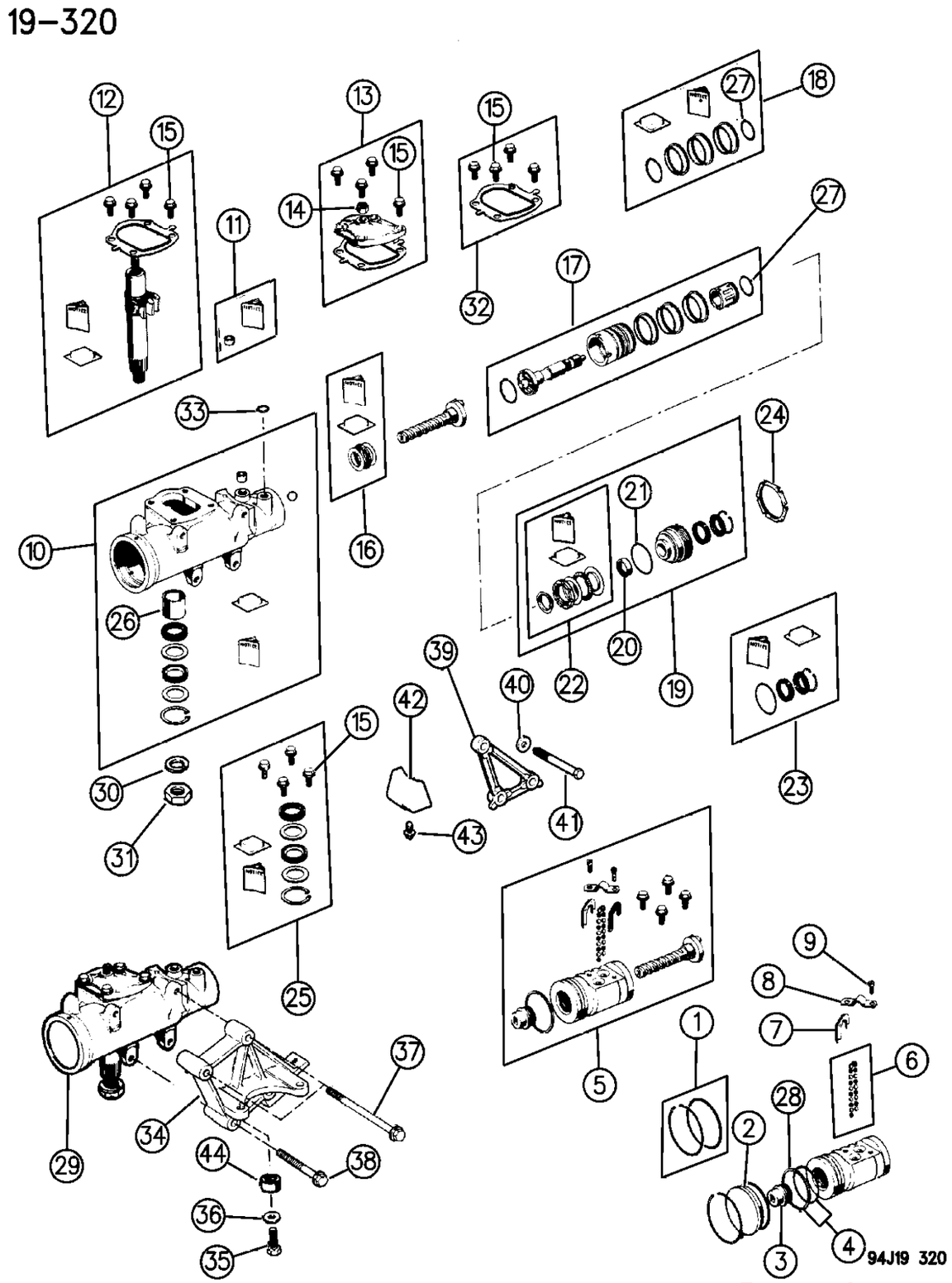

ITEM	PART NUMBER	QTY	BODY	MODEL	DESCRIPTION
	5208 8015	1	XJ		w/LHD, 1996
	5602 2063	1	XJ		w/LHD, 1996 EUROPE
	5208 7753	1	ZJ		w/o Trailer Tow 1994-95
	5208 8324	1	ZJ		w/o Trailer Tow 1996
	5208 7754	1	ZJ		w/Trailer Tow (AHT,AHC or AHX) 1994-95
	5208 8328	1	ZJ		w/Trailer Tow (AHT,AHC or AHX) 1996
	5208 8324	1	ZG		w/LHD, w/(SBA)
	5208 8328	1	ZG		w/LHD, w/(SBC)
	5305 4527	1	ZG		w/RHD, w/(SBA)
	5305 4560	1	ZG		w/RHD, w/(SBC)
	8350 6609	1	XJ		EUROPE - France Only
	5208 8004	1	YJ,XJ		w/RHD 1994-95
	5208 8487	1	XJ		w/RHD 1996
30	S010 3336	1			WASHER
31	J320 0501	1			NUT
32	J812 5038	1			SEAL PACKAGE
33	J325 1183	2			SEAL
34					BRACKET
	5200 4409	1	YJ		
	5208 7962	1	Y1		w/RHD (XDT)
35	6034 140	2	YJ		BOLT, .500-13x2.5
36	J400 5397	2	YJ		WASHER
37					BOLT
	J400 7238	1	YJ		5.0" length
	J400 5613	1	YJ		5.5" length
	6034 539	3	ZJ		3.25 length
38	J400 7250	1	YJ		BOLT
39					ADAPTER
	5200 0090	1	XJ		w/LHD
	5200 6512	1	XJ		w/RHD
40	J400 3926	3	XJ		WASHER
41	J400 6993	3	XJ		BOLT, 7/16x14x4.00
42	5200 0881	1	XJ		BLOCK
43	3420 1193	1	XJ		SCREW
44	5200 4566	2	YJ		BUSHING

MODEL CODES:

72=2 DR Wagon
74=4 DR Wagon
77=Open Body 93" Whlbase
78=Open Body 103" Whlbase - Export
T=2WD
J,N=4WD
U=4WD (RHD)

BODY STYLES:

YJ=Wrangler (4X4) "S"
Weangler (4X4) SE
Wrangler (4X4) Sahara
Wrangler (4X4) Renegade
XJ=Cherokee SE
Cherokee Sport
Cherokee Country
ZJ=Grand Cherokee SE
Grand Cherokee Laredo
Grand Cherolee Limited
ZG=Grand Cherokee European
Y1=Wrangler
X1=Cherokee
Z1=Grand Cherokee
KDX=Vehicles

AR = Use as Required - = Non Illustrated Part P.A.R. = Paint as Required

LINKAGE AND DAMPER WRANGLER (YJ)
Figure 19-410

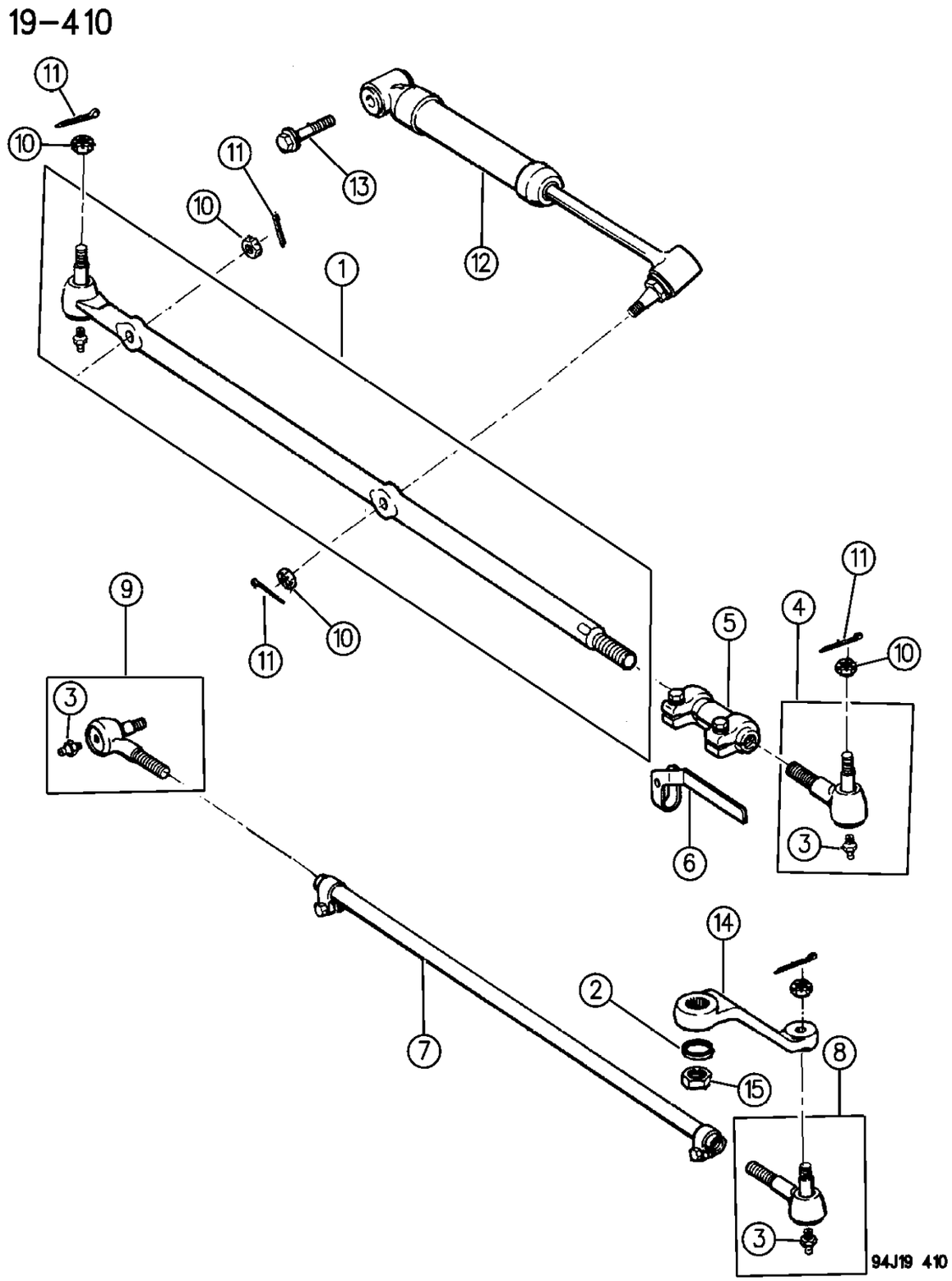

ITEM	PART NUMBER	QTY	BODY	MODEL	DESCRIPTION
1					END, Tie Rod Outer To Knuckle
	5200 6602	1			w/LHD
	5503 6772	1			w/RHD
2	S010 3336	2			WASHER
3	J027 1287	4			FITTING
4	5200 5739	1			END, Tie Rod
5	5200 6606	1			TUBE
6	5200 2547	1			BAR
7	5200 6608	1			TUBE
8	5200 5741	1			END, Tie Rod (Lt. Hand Th'd) To Pitman Arm
9	5200 5740	1			END, Tie Rod (Rt. Hand Th'd)
10	J027 4428	4			NUT
11	S011 9120	4			PIN, Cotter
12	5200 2739	1			DAMPER
13	J400 7388	1			BOLT
14					ARM, Pitman
	5204 0112	1			w/LHD, w/Power Steering
	5200 6505	1			w/RHD, w/Power Steering
	5204 0110	1			w/o Power Steering
15	J320 0501	1			NUT

MODEL CODES:

72=2 DR Wagon
74=4 DR Wagon
77=Open Body 93" Whlbase
78=Open Body 103" Whlbase - Export
T=2WD
J,N=4WD
U=4WD (RHD)

BODY STYLES:

YJ=Wrangler (4X4) "S"
Weangler (4X4) SE
Wrangler (4X4) Sahara
Wrangler (4X4) Renegade

XJ=Cherokee SE
Cherokee Sport
Cherokee Country

ZJ=Grand Cherokee SE
Grand Cherokee Laredo
Grand Cherolee Limited
ZG=Grand Cherokee European

Y1=Wrangler
X1=Cherokee
Z1=Grand Cherokee
KDX=Vehicles

AR = Use as Required - = Non Illustrated Part P.A.R. = Paint as Required

« RETURN TO GROUP INDEX

LINKAGE AND DAMPER CHEROKEE
Figure 19-420

19-420A

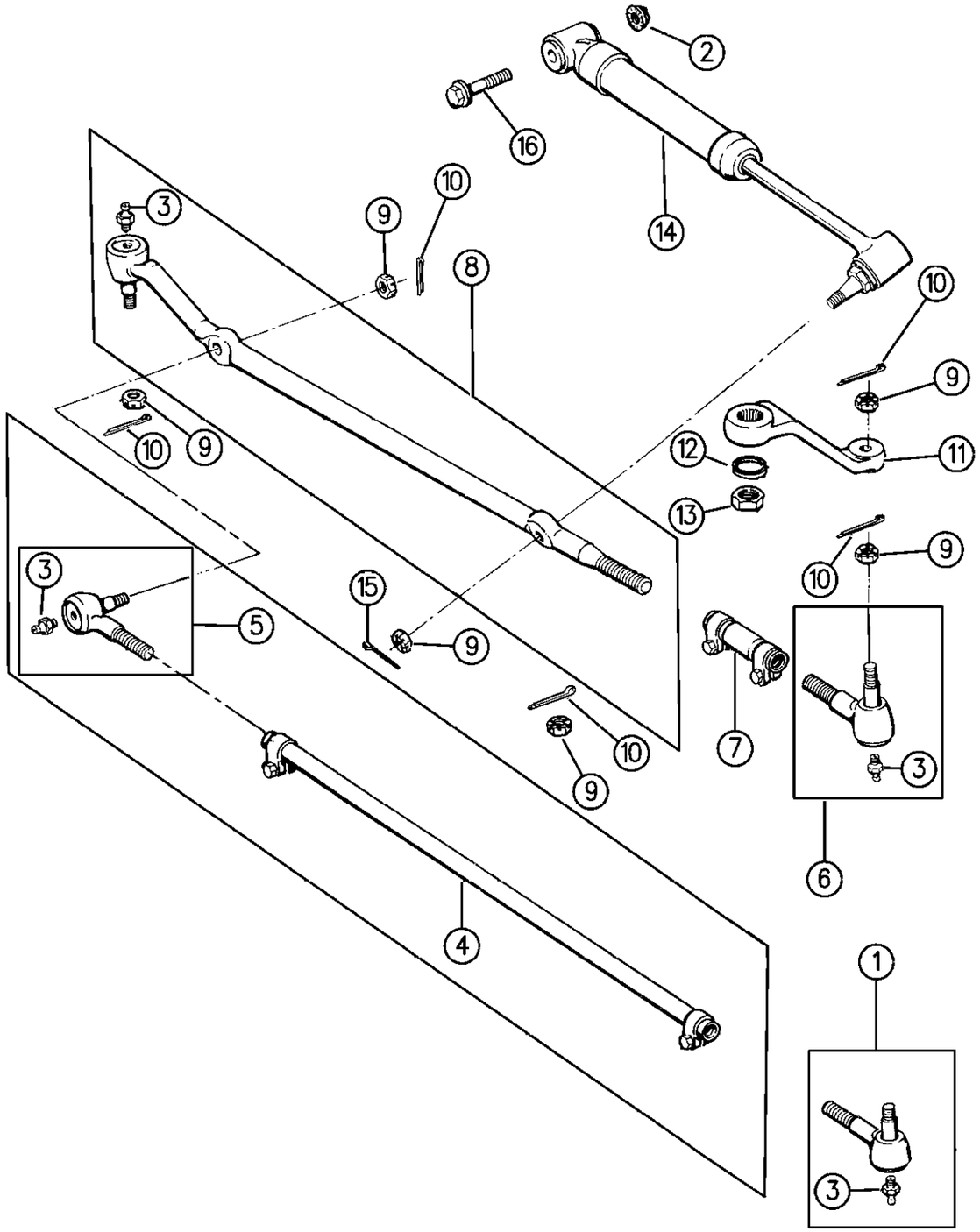

ITEM	PART NUMBER	QTY	BODY	MODEL	DESCRIPTION
1	5200 5741	1			END, Tie Rod Outer To Knuckle
2	1150 2813	1			NUT
3	8350 7064	4			FITTING
4	5200 5743	1			TUBE
5	5200 5740	1			END, Tie Rod (Rt. Hand Th'd)
6	5200 5739	1			END, Tie Rod (Lt. Hand Th'd) To Pitman Arm
7	5200 5742	1			TUBE
8	5200 6592	1			END, Tie Rod
	5200 6582	1			w/RHD
9	J027 4428	5			NUT
10	S011 9120	4			PIN, Cotter
11					ARM, Pitman
	5200 0615	1			w/Power Steering
	5200 6505	1			w/Power Steering w/RHD
	5200 0616	1			w/o Power Steering ***
12	S010 3336	1			WASHER
13	J320 0501	1			NUT
14	5208 7827	1			DAMPER
	5203 7506	1			w/RHD
15	S011 9120	1			PIN, Cotter
16	1150 5098	1			BOLT

MODEL CODES:

72=2 DR Wagon
74=4 DR Wagon
77=Open Body 93" Whlbase
78=Open Body 103" Whlbase - Export
T=2WD
J,N=4WD
U=4WD (RHD)

BODY STYLES:

YJ=Wrangler (4X4) "S"
Weangler (4X4) SE
Wrangler (4X4) Sahara
Wrangler (4X4) Renegade
XJ=Cherokee SE
Cherokee Sport
Cherokee Country
ZJ=Grand Cherokee SE
Grand Cherokee Laredo
Grand Cherolee Limited
ZG=Grand Cherokee European
Y1=Wrangler
X1=Cherokee
Z1=Grand Cherokee
KDX=Vehicles

AR = Use as Required - = Non Illustrated Part P.A.R. = Paint as Required

« RETURN TO GROUP INDEX

LINKAGE AND DAMPER GRAND CHEROKEE (ZJ)
Figure 19-430

19-430

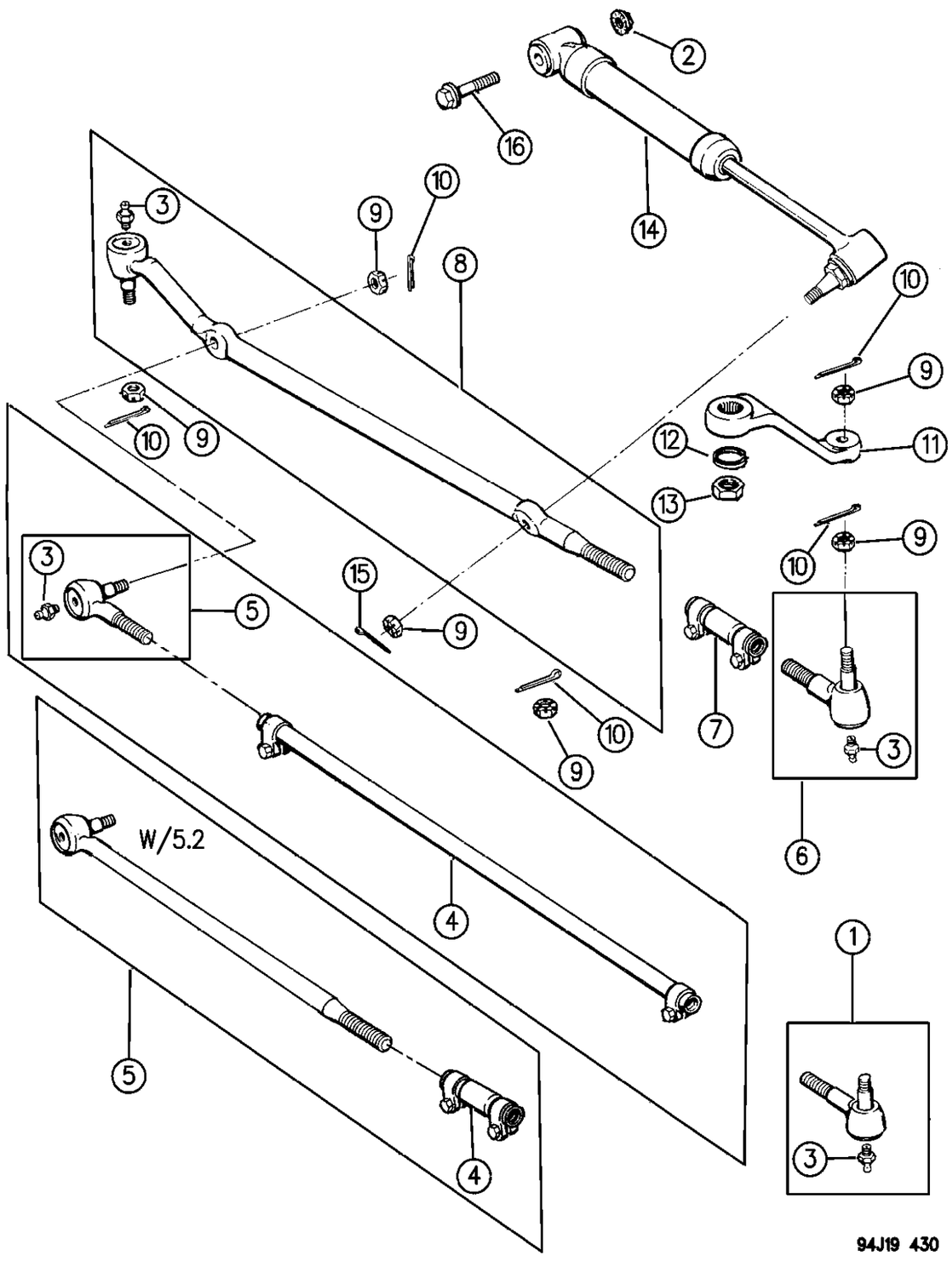

ITEM	PART NUMBER	QTY	BODY	MODEL	DESCRIPTION
1					END, Tie Rod Outer To Knuckle
	5200 5741	1			w/2.5L Eng.
	5200 5741	1			w/4.0L Eng.
	5200 5739	1			w/5.2L Eng.
2	6502 697	4			NUT
3	8350 7064	4			FITTING
4	5208 7674	1			TUBE, w/4.0L Eng. (w/5.2L Eng. See Item #8)
5					END, Tie Rod (Rt. Hand Th'd)
	5200 5740	1			w/4.0L Eng.
	5203 7996	1			w/5.2L Eng.
	5305 4315	1	ZG		(RHD)
6					END, Tie Rod (Lt. Hand Th'd) To Pitman Arm
	5200 5739	1			w/4.0L Eng.
	5200 5739	1			w/5.2L Eng.
7					TUBE
	5200 5742	1			w/4.0L Eng.
	5203 7536	1			w/5.2L Eng.
8					END, Tie Rod
	5200 5738	1			w/4.0L Eng.
	5203 7994	1			w/5.2L Eng.
	5305 4313	1	ZG		w/2.5,4.0L Eng. (RHD)
9	J027 4428	5			NUT
10	S011 9120	4			PIN, Cotter
11					ARM, Pitman
	5200 5285	1	ZJ		
	5305 4171	1	ZG		(RHD)
12	S010 3336	1			WASHER
13	J320 0501	1			NUT
14	5208 7827	1			DAMPER
15	S011 9120	1			PIN, Cotter
16	6502 473	1			BOLT

MODEL CODES:

72=2 DR Wagon
74=4 DR Wagon
77=Open Body 93" Whlbase
78=Open Body 103" Whlbase - Export
T=2WD
J,N=4WD
U=4WD (RHD)

BODY STYLES:

YJ=Wrangler (4X4) "S"
Weangler (4X4) SE
Wrangler (4X4) Sahara
Wrangler (4X4) Renegade
XJ=Cherokee SE
Cherokee Sport
Cherokee Country
ZJ=Grand Cherokee SE
Grand Cherokee Laredo
Grand Cherolee Limited
ZG=Grand Cherokee European
Y1=Wrangler
X1=Cherokee
Z1=Grand Cherokee
KDX=Vehicles

AR = Use as Required - = Non Illustrated Part P.A.R. = Paint as Required

« RETURN TO GROUP INDEX

PUMP, POWER STEERING WRANGLER, CHEROKEE GRAND CHEROKEE (ZJ)
Figure 19-510

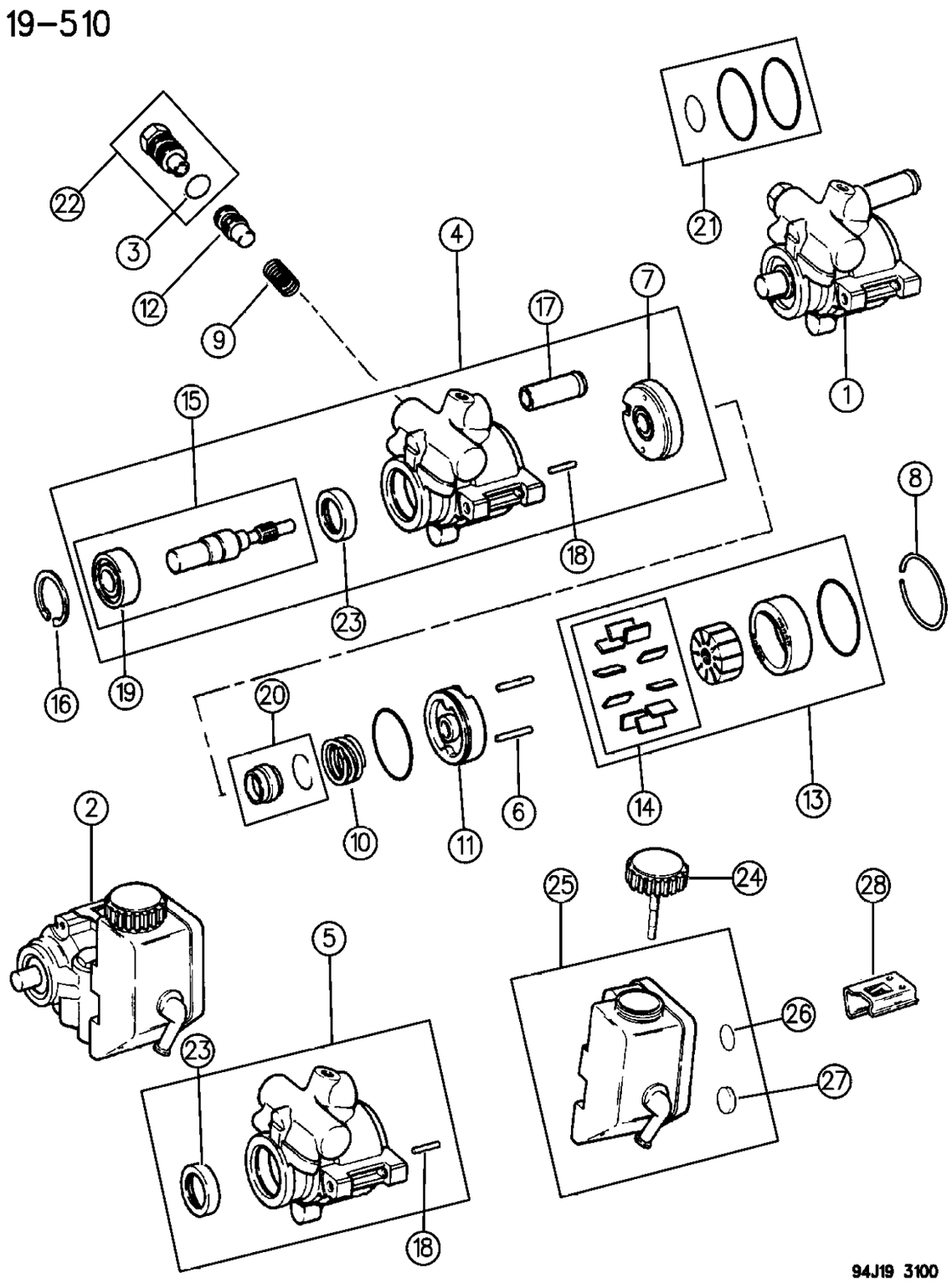

ITEM	PART NUMBER	QTY	BODY	MODEL	DESCRIPTION
NOTE: Sales Code XCT = 1996 Engine Parts					
1					PUMP, Power Steering
	5203 7566	1			w/2.5L Eng. 1994-95, w/o XCT (1996 Engine Parts)
	5208 8500	1			w/2.5L Eng. 1995-96, w/XCT (1996 Engine Parts)
2					PUMP, Power Steering
	5300 7140	1	YJ		w/4.0L Eng., 1994-95
	5208 8500	1	YJ		w/4.0L Eng. 1995, w/XCT (1996 Engine Parts)
	5300 7383	1	XJ		w/4.0L Eng. 1994-95
	5208 7871	1	XJ		w/4.0L Eng. 1996
	5203 7566	1			w/4.0L Eng., EUROPEAN
	5203 7812	1			w/4.0L Eng., RHD 1994
	5208 9036	1			w/4.0L Eng., RHD 1995
	5208 8327	1			w/4.0L Eng., RHD 1996
	5208 8022	1	ZJ		w/4.0L Eng., w/Trailer Tow Pkg. 1994-95
	5300 7383	1	ZJ		w/4.0L Eng., w/o Trailer Tow Pkg. 1994-95
	5203 7812	1	ZJ		w/5.2L Eng., w/o Trailer Tow 1994-95
	5208 7658	1	ZJ		w/5.2L Eng., w/Trailer Tow 1994-95
	5208 8139	1	ZJ,ZG		w/4.0,5.2L Eng., w/o Speed Proportional Steering 1996
	5208 8250	1	ZJ,ZG		w/4.0,5.2L Eng., w/Speed Proportional Steering
3	J320 9671	1			SEAL
4	8350 3485	1			BODY PACKAGE, w/2.5L Eng.
5	8350 3491	1			BODY PACKAGE, w/4.0L Eng.
6	8350 1818	2			PIN
7	8350 1815	1			PLATE
8	8350 1821	1			RING
9	J320 9673	1			SPRING
10	8350 1822	1			SPRING
11	8350 4035	1			PLATE
12					VALVE
	8350 4436	1			w/2.5L Eng.
	8350 3489	1			w/4.0L Eng.
	8350 4436	1			w/4.0L Eng. EUROPE
13	8350 2168	1			RING PACKAGE
14	8350 1827	1			VANE PACKAGE
15	8350 4033	1			SHAFT
16	8350 1820	1			RING
17	8350 0266	1			TUBE, w/2.5L Eng.
18	8350 1828	1			PIN
19	8350 4034	1			BEARING
20	8350 1826	1			SLEEVE PACKAGE
21	8350 1825	1			SEAL PACKAGE
	4728 247	1	ZJ		w/Trailer Tow

MODEL CODES:

72=2 DR Wagon
74=4 DR Wagon
77=Open Body 93" Whlbase
78=Open Body 103" Whlbase - Export
T=2WD
J,N=4WD
U=4WD (RHD)

BODY STYLES:

YJ=Wrangler (4X4) "S"
Weangler (4X4) SE
Wrangler (4X4) Sahara
Wrangler (4X4) Renegade
XJ=Cherokee SE
Cherokee Sport
Cherokee Country
ZJ=Grand Cherokee SE
Grand Cherokee Laredo
Grand Cherolee Limited
ZG=Grand Cherokee European
Y1=Wrangler
X1=Cherokee
Z1=Grand Cherokee
KDX=Vehicles

AR = Use as Required - = Non Illustrated Part P.A.R. = Paint as Required

PUMP, POWER STEERING WRANGLER, CHEROKEE GRAND CHEROKEE (ZJ)
Figure 19-510

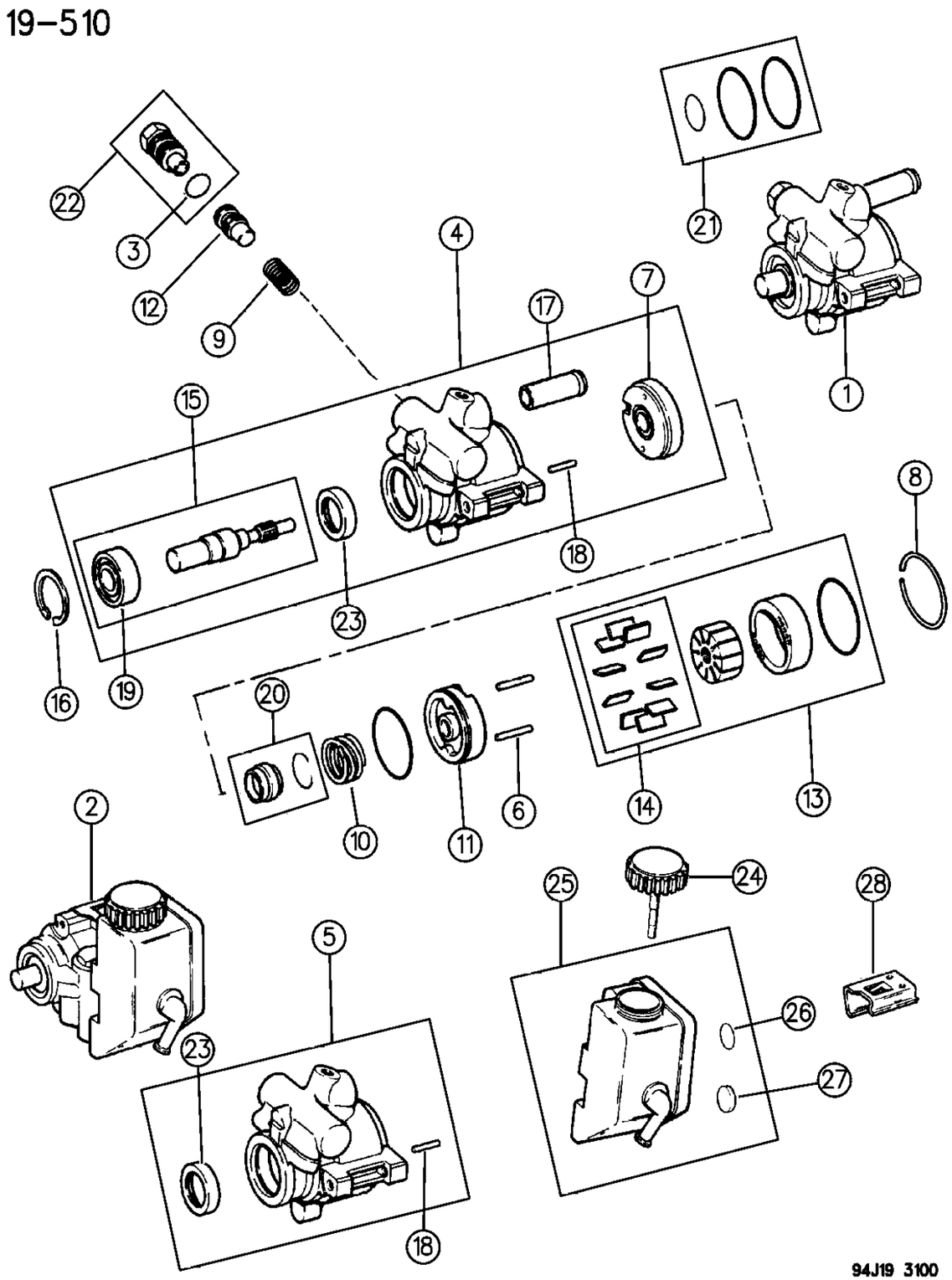

ITEM	PART NUMBER	QTY	BODY	MODEL	DESCRIPTION
22					FITTING
	8350 5299	1			w/2.5L Eng.
	8350 3484	1			w/4.0L Eng.
	8350 5299	1			w/4.0L Eng. EUROPE
23	8350 1814	1			SEAL
24	4694 765	1			CAP
25	5203 7544	1	XJ,ZJ		RESERVIOR, 4.0L Engine LHD ***
26	4333 377	1			SEAL, w/4.0L Eng.
27	8350 0243	1			MAGNET, w/4.0L Eng. ***
28					CLIP, w/4.0L Eng.
	5203 7547	1			Rt.
	5203 7546	1			Lt.

MODEL CODES:

72=2 DR Wagon
74=4 DR Wagon
77=Open Body 93" Whlbase
78=Open Body 103" Whlbase - Export
T=2WD
J,N=4WD
U=4WD (RHD)

BODY STYLES:

YJ=Wrangler (4X4) "S"
Weangler (4X4) SE
Wrangler (4X4) Sahara
Wrangler (4X4) Renegade
XJ=Cherokee SE
Cherokee Sport
Cherokee Country
ZJ=Grand Cherokee SE
Grand Cherokee Laredo
Grand Cherolee Limited
ZG=Grand Cherokee European
Y1=Wrangler
X1=Cherokee
Z1=Grand Cherokee
KDX=Vehicles

AR = Use as Required - = Non Illustrated Part P.A.R. = Paint as Required

PUMP, POWER STEERING 2.1L DIESEL ENGINE, 1994 CHEROKEE
Figure 19-520

19–520

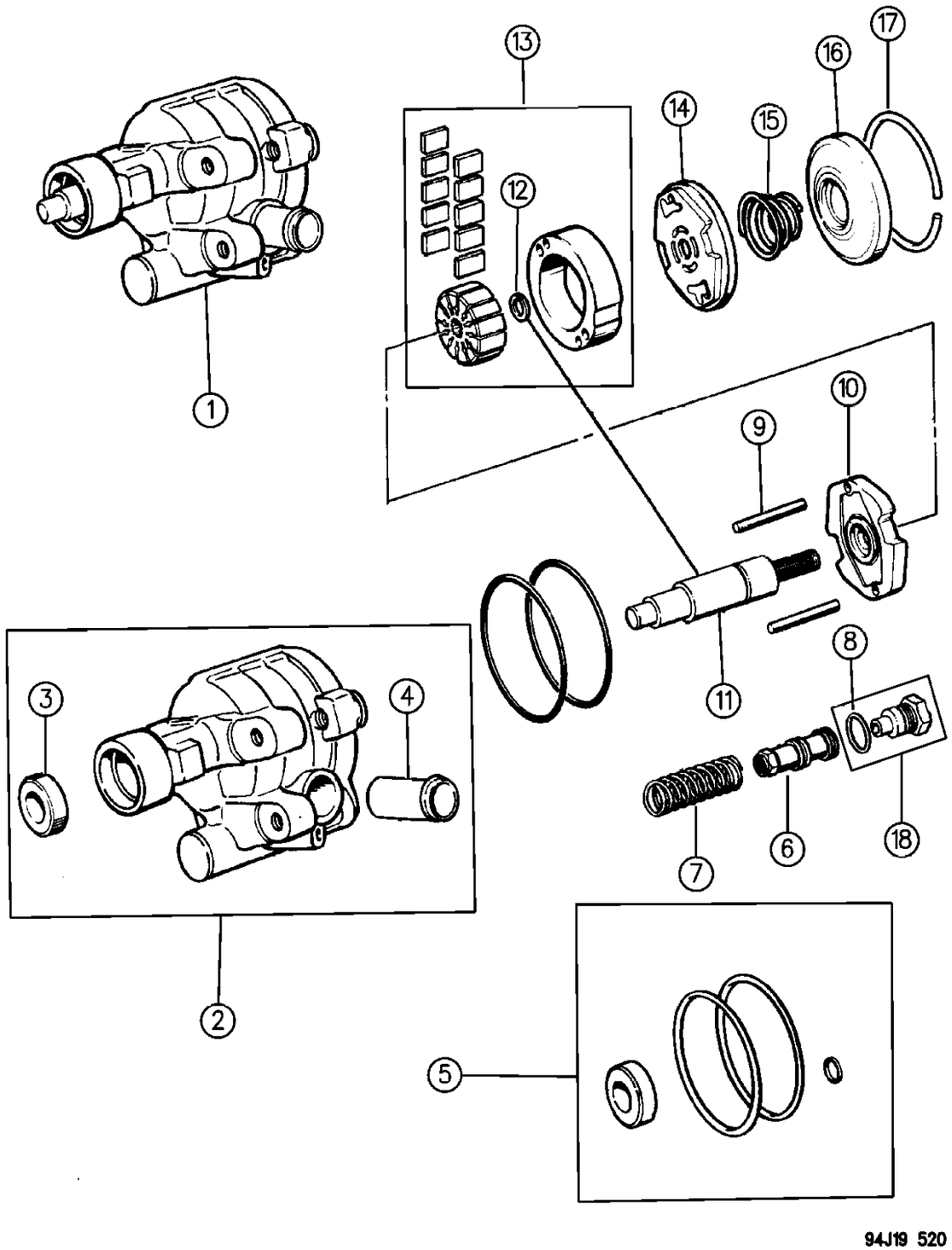

ITEM	PART NUMBER	QTY	BODY	MODEL	DESCRIPTION
1	5203 7567	1			PUMP, Power Steering 1994
2	8350 0265	1			HOUSING
3	J448 8330	1			SEAL
4	8350 0266	1			TUBE
5	8350 0074	1			SEAL PACKAGE
6	J812 5923	1			VALVE
7	J320 9673	1			SPRING
8	J320 9671	1			SEAL
9	J320 9660	1			PIN
10	8350 0071	1			PLATE
11	J813 3828	1			SHAFT PACKAGE
12	8350 0075	1			RING PACKAGE
13	J813 3829	1			RING PACKAGE
14	J813 3957	1			PLATE
15	J813 3958	1			SPRING
16	J320 9661	1			PLATE
17	J320 9664	1			RING
18	8350 2088	1			FITTING

MODEL CODES:

72=2 DR Wagon
74=4 DR Wagon
77=Open Body 93" Whlbase
78=Open Body 103" Whlbase - Export
T=2WD
J,N=4WD
U=4WD (RHD)

BODY STYLES:

YJ=Wrangler (4X4) "S"
Weangler (4X4) SE
Wrangler (4X4) Sahara
Wrangler (4X4) Renegade

XJ=Cherokee SE
Cherokee Sport
Cherokee Country

ZJ=Grand Cherokee SE
Grand Cherokee Laredo
Grand Cherolee Limited
ZG=Grand Cherokee European

Y1=Wrangler
X1=Cherokee
Z1=Grand Cherokee
KDX=Vehicles

AR = Use as Required - = Non Illustrated Part P.A.R. = Paint as Required

« RETURN TO GROUP INDEX

PUMP, POWER STEERING 2.5L DIESEL ENGINE, 1995-96 CHEROKEE, GRAND CHEROKEE
Figure 19-525

19-525

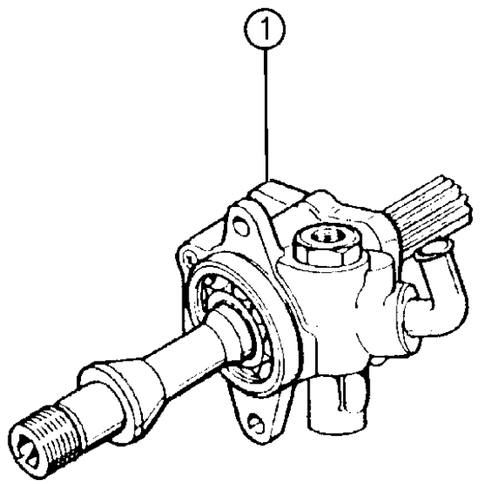

94J19 525

ITEM	PART NUMBER	QTY	BODY	MODEL	DESCRIPTION
1	4864 598	1		XJ, ZG	PUMP, Power Steering 1996
	4796 401	1		XJ	PUMP, Power Steering 1995

MODEL CODES:

72=2 DR Wagon
74=4 DR Wagon
77=Open Body 93" Whlbase
78=Open Body 103" Whlbase - Export
T=2WD
J,N=4WD
U=4WD (RHD)

BODY STYLES:

YJ=Wrangler (4X4) "S"
Weangler (4X4) SE
Wrangler (4X4) Sahara
Wrangler (4X4) Renegade
XJ=Cherokee SE
Cherokee Sport
Cherokee Country
ZJ=Grand Cherokee SE
Grand Cherokee Laredo
Grand Cherolee Limited
ZG=Grand Cherokee European
Y1=Wrangler
X1=Cherokee
Z1=Grand Cherokee
KDX=Vehicles

AR = Use as Required - = Non Illustrated Part P.A.R. = Paint as Required

PUMP MOUNTING, POWER STEERING WRANGLER, CHEROKEE,GRAND CHEROKEE (ZJ)
Figure 19-530

19–530

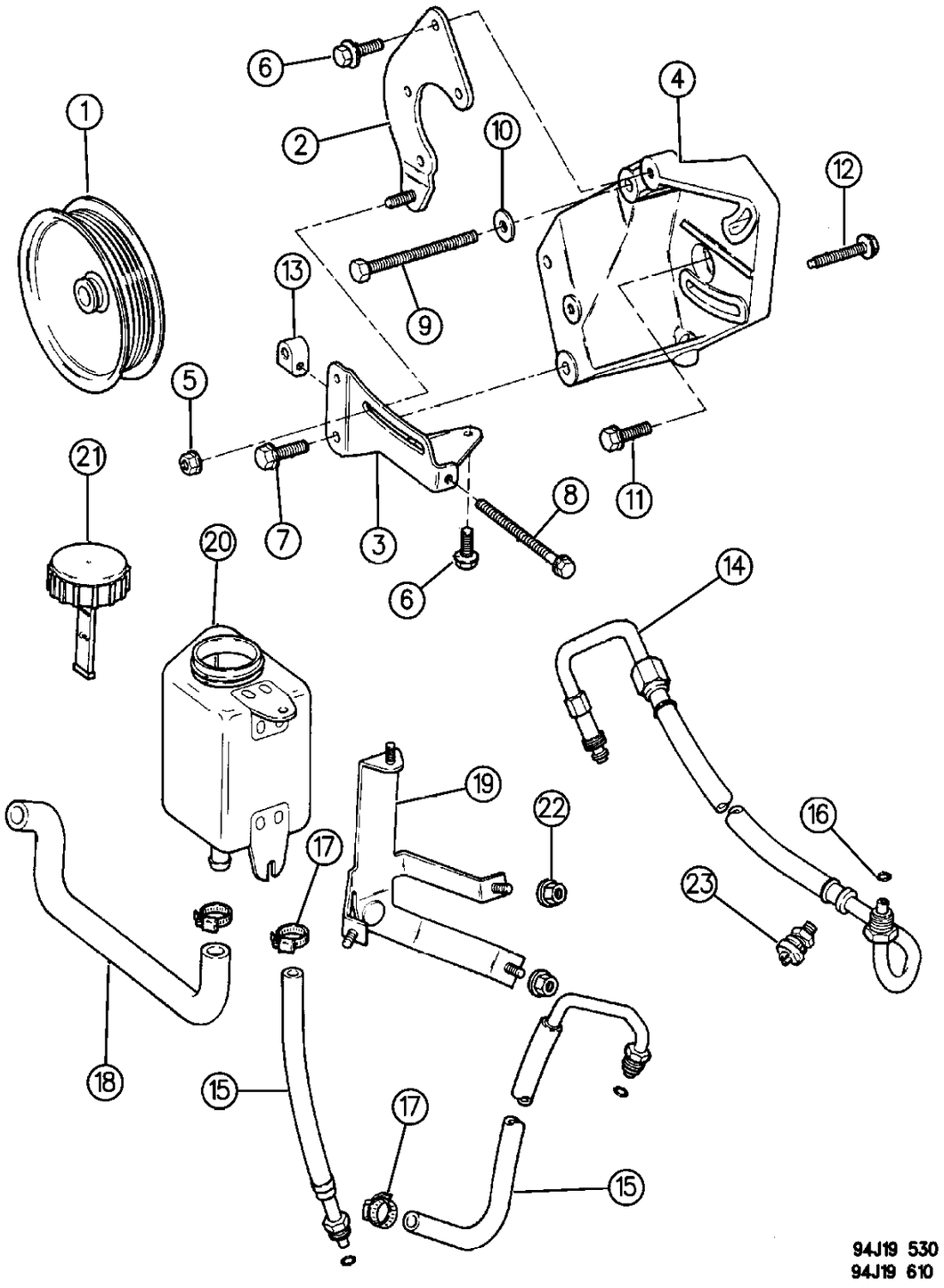

ITEM	PART NUMBER	QTY	BODY	MODEL	DESCRIPTION
1					PULLEY
	5300 2909	1			w/2.5L Eng. 1994-95
	5301 0258	1			w/2.5L Eng. 1996
	5300 2909	1			w/4.0L Eng. 1994-95
	5301 0258	1			w/4.0L Eng. 1996
	5301 0085	1	ZJ		w/4.0L Eng. 1994-95
	5301 0258	1	ZJ		w/4.0L Eng. 1996
	5300 8619	1	ZJ		w/5.2L Eng. 1994-95
	5301 1017	1	ZJ		w/5.2L Eng. 1996
2	5300 2911	1			BRACKET
	5301 0232	1			w/RHD
	5301 0130	1	ZJ		w/4.0L Eng.
3					BRACKET
	5300 2913	1			w/LHD, 1994-95
	5301 0148	1			w/LHD, 1996
	5301 0146	1			w/RHD
4	5300 7616	1	X1		BRACKET Stamped 53007617 ***
	5300 8343	1	ZJ		w/5.2L Eng. 1994-95
	5301 0256	1	ZJ		w/5.2L Eng. 1996
5	3420 1918	1			NUT
6					SCREW
	3420 1818	1			Length = 25mm
7	J400 6995	2			BOLT
8	3420 2480	1			BOLT
9	J045 6958	1			BOLT
		3	ZJ		w/5.2L Eng. (Not Serv.) 5/16-16x3"
10	J400 1161	1			WASHER
11	J812 5845	1			BOLT
		3	ZJ		w/5.2L Eng. (Not Serv.) 3/8-16x1"
12	3420 1819	2			SCREW
13	5300 2915	1			COLLAR
14					HOSE
	5203 8015	1			w/2.5L Eng.
	5200 4965	1			w/4.0L Eng.
	5208 7796	1			w/4.0L Eng., w/RHD
14	5208 8007	1			w/5.2L Eng. (pressure hose)
14	5208 7748	1			w/5.2L Eng. (return hose)
15					HOSE
	5200 3135	1			w/2.5L Eng.
	5200 6503	1			w/2.5L Eng., w/RHD
	5203 7645	1			w/4.0L Eng.
	5208 7797	1			w/4.0L Eng., w/RHD

MODEL CODES:

72=2 DR Wagon
74=4 DR Wagon
77=Open Body 93" Whlbase
78=Open Body 103" Whlbase - Export
T=2WD
J,N=4WD
U=4WD (RHD)

BODY STYLES:

YJ=Wrangler (4X4) "S"
Weangler (4X4) SE
Wrangler (4X4) Sahara
Wrangler (4X4) Renegade
XJ=Cherokee SE
Cherokee Sport
Cherokee Country
ZJ=Grand Cherokee SE
Grand Cherokee Laredo
Grand Cherolee Limited
ZG=Grand Cherokee European
Y1=Wrangler
X1=Cherokee
Z1=Grand Cherokee
KDX=Vehicles

AR = Use as Required - = Non Illustrated Part P.A.R. = Paint as Required

PUMP MOUNTING, POWER STEERING WRANGLER, CHEROKEE,GRAND CHEROKEE (ZJ)
Figure 19-530

19–530

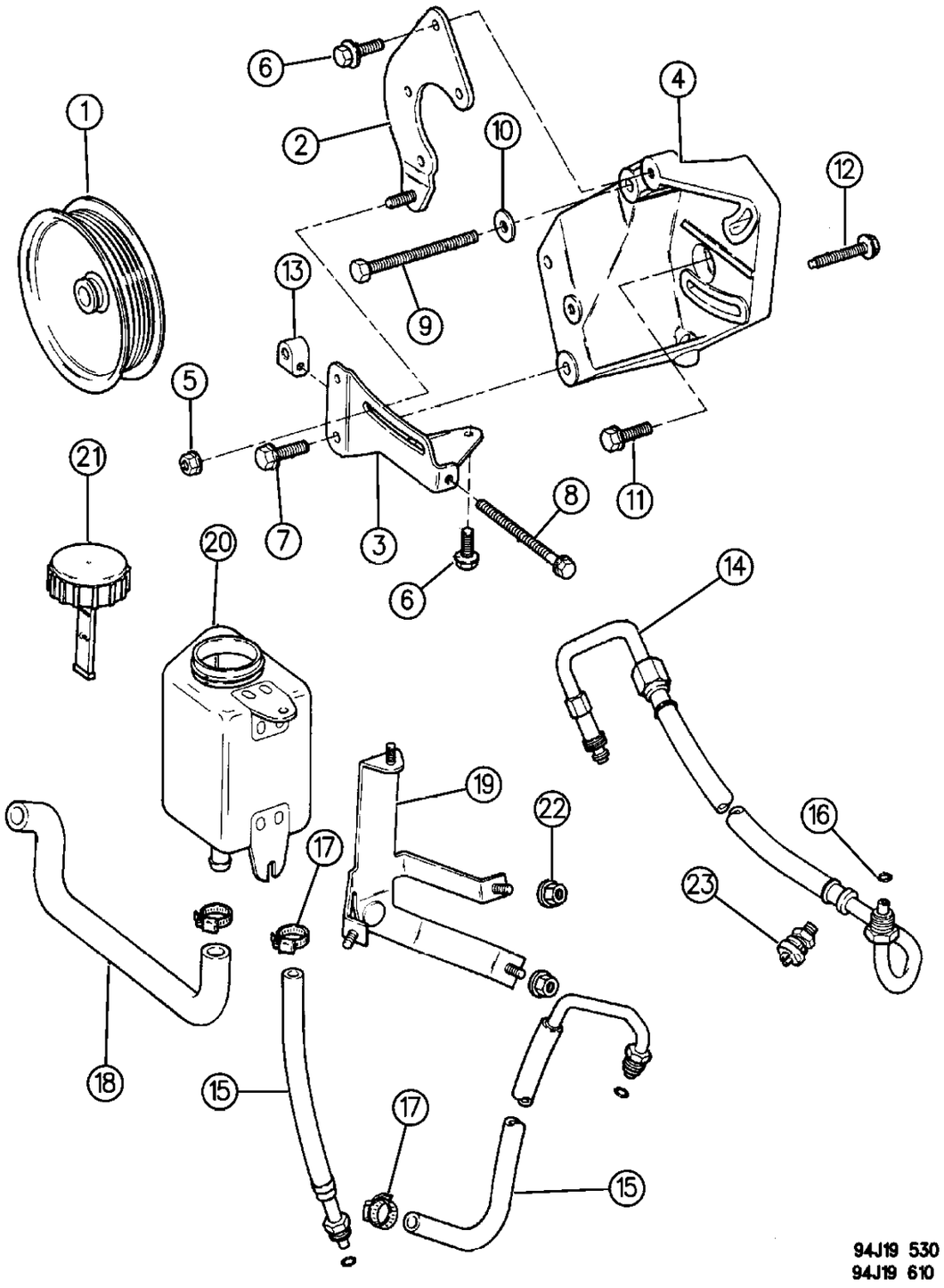

ITEM	PART NUMBER	QTY	BODY	MODEL	DESCRIPTION
16	J325 1183	1			SEAL
17	J320 3076	AR			CLAMP
18	5200 5277	1			HOSE, w/2.5L Eng.
19	5200 3224	1			BRACKET, w/2.5L Eng.
20	5200 4991	1			RESERVOIR, w/2.5L Eng.
21	4470 376	1			CAP, w/2.5L Eng.
22					NUT
	1150 2722	3			M5x0.8, w/2.5L Eng.
	1150 3745	2			M6x1.0, w/2.5L Eng.
23	5300 0970	1			SWITCH, High Pressure

MODEL CODES:

72=2 DR Wagon
74=4 DR Wagon
77=Open Body 93" Whlbase
78=Open Body 103" Whlbase - Export
T=2WD
J,N=4WD
U=4WD (RHD)

BODY STYLES:

YJ=Wrangler (4X4) "S"
Weangler (4X4) SE
Wrangler (4X4) Sahara
Wrangler (4X4) Renegade
XJ=Cherokee SE
Cherokee Sport
Cherokee Country
ZJ=Grand Cherokee SE
Grand Cherokee Laredo
Grand Cherolee Limited
ZG=Grand Cherokee European
Y1=Wrangler
X1=Cherokee
Z1=Grand Cherokee
KDX=Vehicles

AR = Use as Required - = Non Illustrated Part P.A.R. = Paint as Required

PUMP MOUNTING POWER STEERING, 2.1L DIESEL ENG., 1994 CHEROKEE
Figure 19-540

19–540

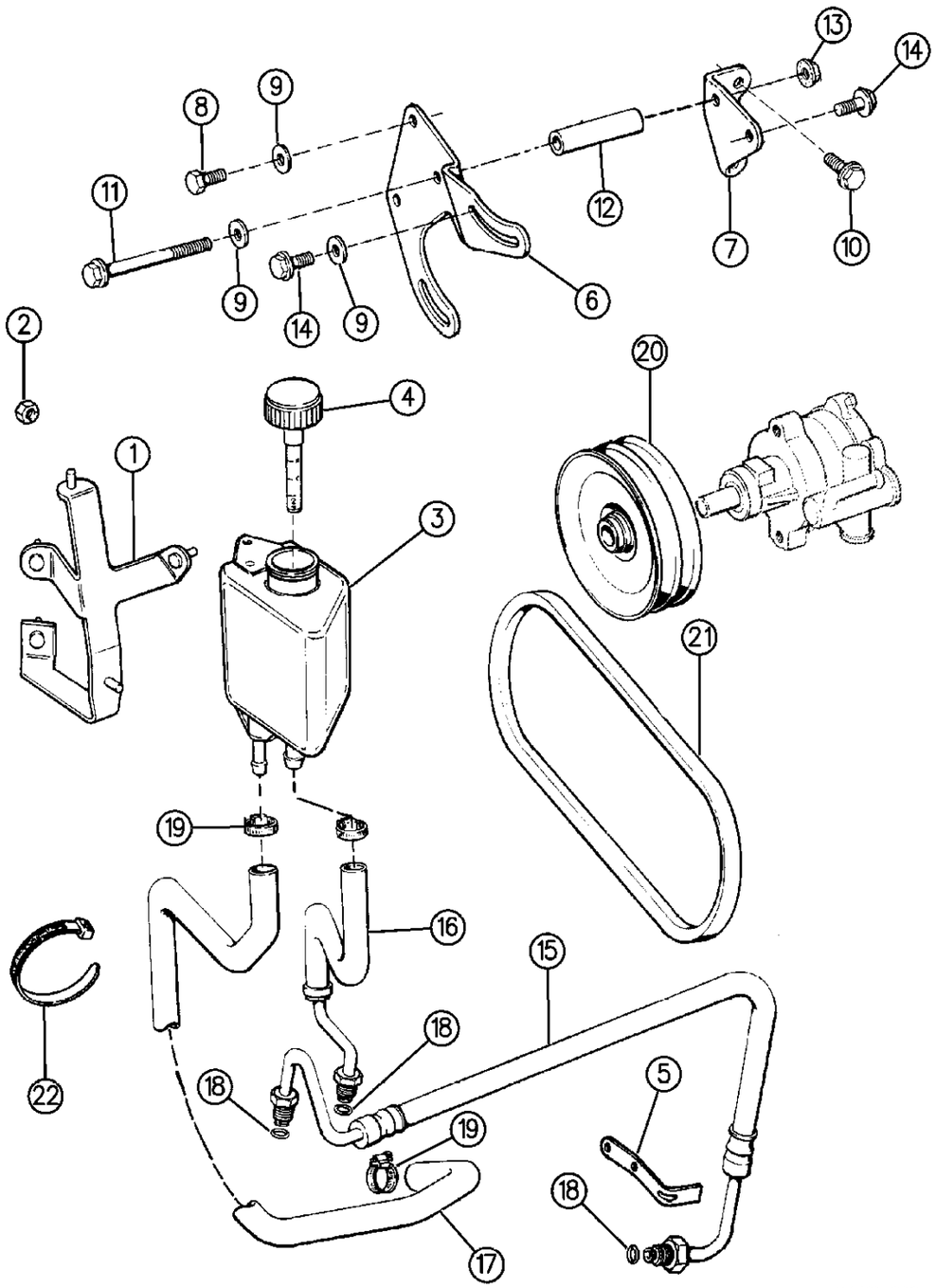

94J19 620

94J19 540

ITEM	PART NUMBER	QTY	BODY	MODEL	DESCRIPTION
1	5200 3225	1			BRACKET
2					NUT
	1150 2722	3			M5x0.8
	1150 3745	2			M6x1.0
3	5200 6395	1			RESERVOIR
4	5200 5410	1			CAP
5	5200 3629	1			BRACKET
6	5300 1768	1			BRACKET
7	5301 0057	1			BRACKET
8	S150 0832	2			BOLT
9	J400 1104	5			WASHER
10	3420 1586	2			BOLT
11	3420 2061	1			BOLT
12	3420 2052	1			SPACER
13	1150 2812	1			NUT
14	3420 1540	3			BOLT
15	5200 3628	1			HOSE
16	5200 3140	1			HOSE
17	5200 3139	1			HOSE
18	J325 1183	3			SEAL
19	J320 3076	3			CLAMP
20	5300 1767	1			PULLEY, w/2.1L Diesel Eng.
21	JY01 5332	1			BELT
22	J322 3227	1			STRAP

MODEL CODES:

72=2 DR Wagon
74=4 DR Wagon
77=Open Body 93" Whlbase
78=Open Body 103" Whlbase - Export
T=2WD
J,N=4WD
U=4WD (RHD)

BODY STYLES:

YJ=Wrangler (4X4) "S"
Weangler (4X4) SE
Wrangler (4X4) Sahara
Wrangler (4X4) Renegade
XJ=Cherokee SE
Cherokee Sport
Cherokee Country
ZJ=Grand Cherokee SE
Grand Cherokee Laredo
Grand Cherolee Limited
ZG=Grand Cherokee European
Y1=Wrangler
X1=Cherokee
Z1=Grand Cherokee
KDX=Vehicles

AR = Use as Required - = Non Illustrated Part P.A.R. = Paint as Required

« RETURN TO GROUP INDEX

PUMP MOUNTING POWER STEERING, 2.5L DIESEL ENG., 1995-96 CHEROKEE, GRAND CHEROKEE
Figure 19-545

19-545

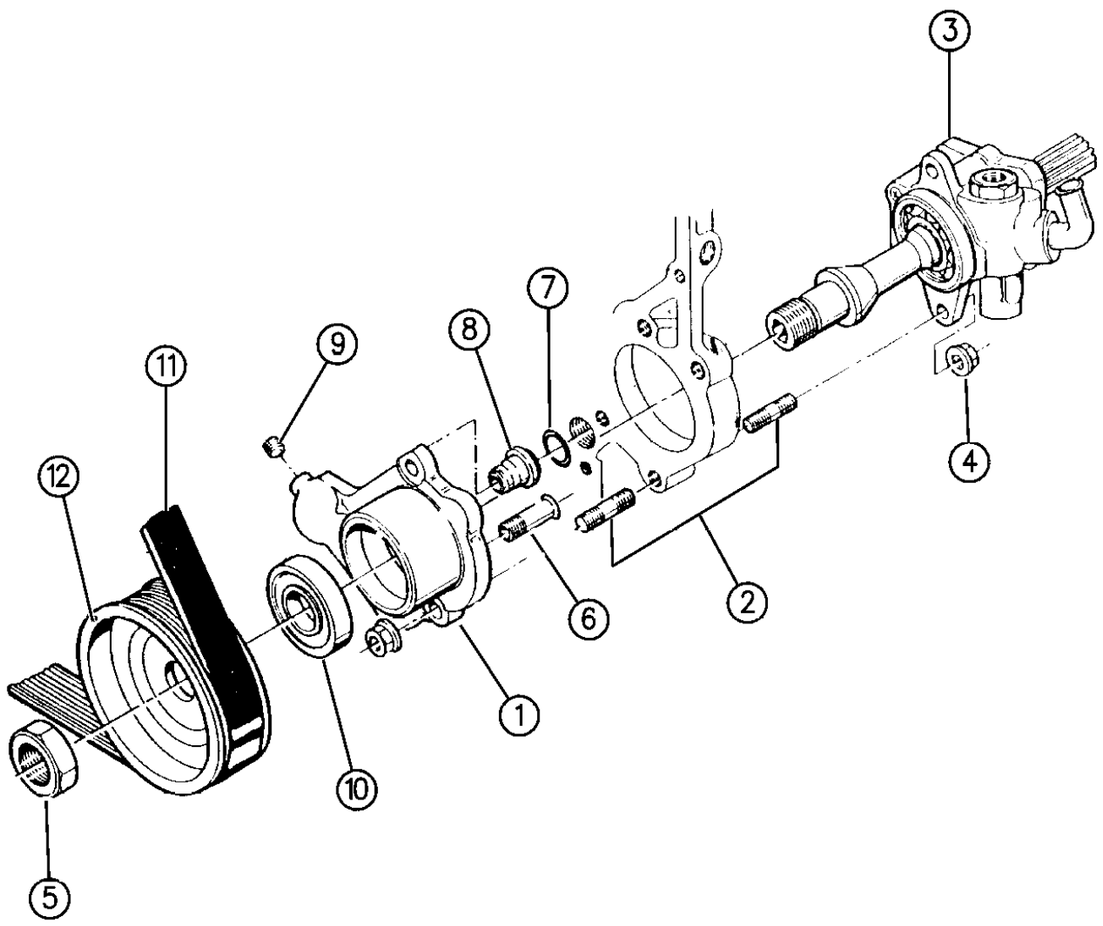

94J19 545

ITEM	PART NUMBER	QTY	BODY	MODEL	DESCRIPTION
1	4796 032	1			SUPPORT, Pump Drive Shaft
2	4723 331	5			STUD, M8x25
3	4796 401	1			PUMP, Power Steering w/Reservoir
-	5208 7713	1			RESERVOIR, Replacement
4	4720 699	5			NUT, Self Locking M8
5	4723 344	1			NUT, Pulley Mounting
6	4723 332	1			PIPE, Vacuum Pump
7	4723 334	1			O'RING, Return Valve 21.82x3.53 ***
8	4723 335	1			VALVE, Vacuum Return
9	4720 664	1			PLUG, M10x1.00
10	4723 339	1			BEARING, Roller
11					BELT, Drive
	4796 033	1	XJ		
	4797 801	1	ZJ		
12	4796 034	1			PULLEY, Pump Drive

MODEL CODES:

72=2 DR Wagon
74=4 DR Wagon
77=Open Body 93" Whlbase
78=Open Body 103" Whlbase - Export
T=2WD
J,N=4WD
U=4WD (RHD)

BODY STYLES:

YJ=Wrangler (4X4) "S"
Weangler (4X4) SE
Wrangler (4X4) Sahara
Wrangler (4X4) Renegade
XJ=Cherokee SE
Cherokee Sport
Cherokee Country
ZJ=Grand Cherokee SE
Grand Cherokee Laredo
Grand Cherolee Limited
ZG=Grand Cherokee European
Y1=Wrangler
X1=Cherokee
Z1=Grand Cherokee
KDX=Vehicles

AR = Use as Required - = Non Illustrated Part P.A.R. = Paint as Required

« RETURN TO GROUP INDEX

HOSES AND RESERVOIR, POWER STEERING WRANGLER (YJ)
Figure 19-710

19-710

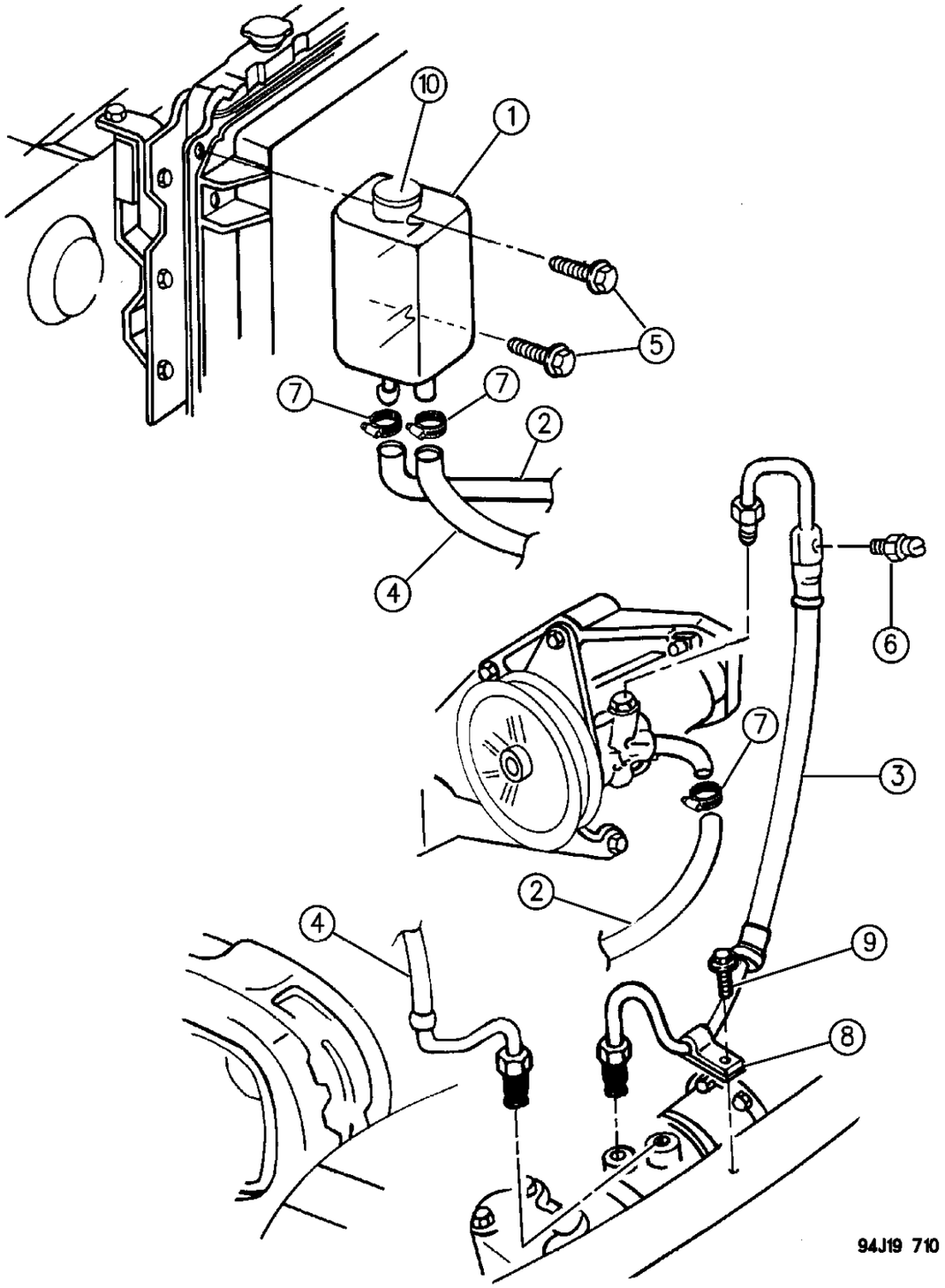

ITEM	PART NUMBER	QTY	BODY	MODEL	DESCRIPTION
1	5200 4991	1			RESERVOIR ASSY. ***
2					HOSE, Return - Pump To Reservoir
	5200 5411	1			w/2.5L Eng.
	5200 4989	1			w/4.0L Eng.
	5208 7748	1		ZJ	W/5.2L Engine ***
	5503 6761	1			RHD (XDT) w/2.5L Eng.
	5503 6763	1			RHD (XDT) w/4.0L Eng.
3					HOSE, Presure
	5203 8014	1			w/2.5L Eng., 1994-95 w/o XCT (1996 Engine Parts)
	5208 8429	1			w/2.5L Eng., 1995 w/XCT (1996 Engine Parts)
	5203 7644	1			w/4.0L Eng.
	5503 6760				RHD (XDT) w/2.5L Eng.
	5503 6762				RHD (XDT) w/4.0L Eng.
4	5203 8016	1			HOSE, Return - Gear To Reservoir
5	J400 3069	2			SCREW
6	5300 0970	1			SWITCH, High Presure
7	2448 770	2			CLAMP
8		1			CLIP, (Not Serv.)
9		1			SCREW, (Not, Serv.) 1/4-14x5/8
10	4470 380	1			CAP, Reservoir

MODEL CODES:

72=2 DR Wagon
74=4 DR Wagon
77=Open Body 93" Whlbase
78=Open Body 103" Whlbase - Export
T=2WD
J,N=4WD
U=4WD (RHD)

BODY STYLES:

YJ=Wrangler (4X4) "S"
Weangler (4X4) SE
Wrangler (4X4) Sahara
Wrangler (4X4) Renegade
XJ=Cherokee SE
Cherokee Sport
Cherokee Country
ZJ=Grand Cherokee SE
Grand Cherokee Laredo
Grand Cherolee Limited
ZG=Grand Cherokee European
Y1=Wrangler
X1=Cherokee
Z1=Grand Cherokee
KDX=Vehicles

AR = Use as Required - = Non Illustrated Part P.A.R. = Paint as Required

« RETURN TO GROUP INDEX

HOSES AND RESERVOIR, POWER STEERING CHEROKEE, GRAND CHEROKEE (ZJ)
Figure 19-720

19–720

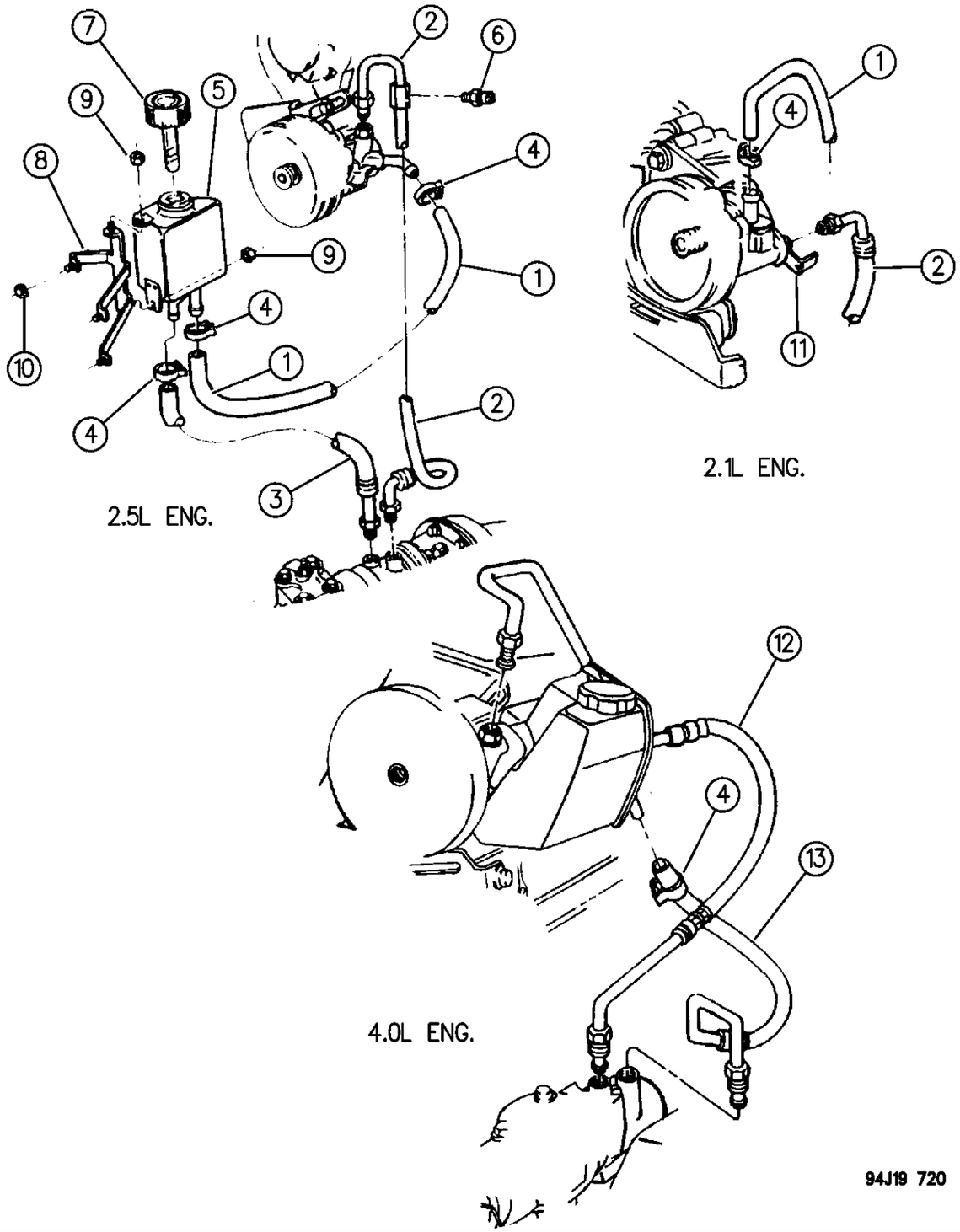

ITEM	PART NUMBER	QTY	BODY	MODEL	DESCRIPTION
1	5200 5277	1			HOSE, Return - Reservoir To Pump w/2.5L Eng.
	5200 3139	1			w/2.1L Eng. 1994
	5208 7862	1	XJ		w/2.5L Diesel Eng. 1995-96
	5208 7892	1	XJ,X1		w/2.5L Diesel Eng. 1995-96 w/RHD
	5200 6504	1			w/2.5L Eng. w/RHD
2					HOSE, Presure - Pump To Gear
	5203 8015	1			w/2.5L Eng. 1994-95
	5208 8313	1			w/2.5L Eng. 1996
	5203 8113	1			w/2.5L Eng. KDX
	5200 3628	1			w/2.1L Eng.
	5208 7783	1	XJ		w/2.5L Diesel Eng. 1995-96 w/LHD
	5208 7886	1	XJ		w/2.5L Diesel Eng. w/RHD 1995-96
	5203 8012	1			w/2.5L Eng., w/1BBL. Carb., w/RHD
	5208 7791	1			w/2.5L Eng., w/EFI., w/RHD
	5203 7556	1			FITTING, Quick Disconnect
3	5200 3135	1			HOSE, Return - Reservoir To Gear w/2.5L Eng.
	5200 3140	1			w/2.1L Eng.
	5208 7789	1			w/2.5L Diesel Eng.1994-95
	5208 8184	1			w/2.5L Diesel Eng.1996
	5200 6503	1			w/2.5L Eng. w/RHD
-	5208 8116	1			FITTING, Quick Disconnect
4	2448 770	AR			CLAMP
5	5200 6395	1			RESERVOIR, w/2.1, 2.5L Eng.
6	5300 0970	1			SWITCH, High Presure
7	5200 5410	1			CAP, Reservoir
	5208 7895	1			w/4.0L Eng. 1995-96
8	5200 3224	1			BRACKET, Reservoir w/2.5L Eng.
	5200 3225	1			w/2.1L Eng.
	5208 7766	1			w/2.5L Diesel Eng.
	5200 6502	1			w/2.5L Eng. w/RHD
9	1150 3745	2			NUT
10	1150 2722	3			NUT
11	5200 3629	1			BRACKET, w/2.1L Eng.
12					HOSE, Presure - Pump To Gear
	4637 915	1	XJ		w/4.0L Eng.
	5208 7796	1	XJ		w/4.0L Eng., w/RHD
	5208 7906	1	ZJ		w/4.0L Eng. w/o (SBC) Speed Propertional Steering 1994-96
	5203 8501	1	ZJ		w/4.0L Eng. w/(SBC) Speed Propertional Steering 1996
	5305 4132	1	ZG		w/4.0L Eng. w/(SBC) Speed Propertional Steering 1996 (RHD)
	5208 8007	1	ZJ		w/5.2L Eng. w/o (SBC) Speed Propertional Steering 1994-96
	5203 8501	1	ZJ		w/5.2L Eng. w/(SBC) Speed Propertional Steering 1996
13					HOSE, Return - Gear To Pump

MODEL CODES:

72=2 DR Wagon
74=4 DR Wagon
77=Open Body 93" Whlbase
78=Open Body 103" Whlbase - Export
T=2WD
J,N=4WD
U=4WD (RHD)

BODY STYLES:

YJ=Wrangler (4X4) "S"
Weangler (4X4) SE
Wrangler (4X4) Sahara
Wrangler (4X4) Renegade
XJ=Cherokee SE
Cherokee Sport
Cherokee Country
ZJ=Grand Cherokee SE
Grand Cherokee Laredo
Grand Cherolee Limited
ZG=Grand Cherokee European
Y1=Wrangler
X1=Cherokee
Z1=Grand Cherokee
KDX=Vehicles

AR = Use as Required - = Non Illustrated Part P.A.R. = Paint as Required

HOSES AND RESERVOIR, POWER STEERING CHEROKEE, GRAND CHEROKEE (ZJ)
Figure 19-720

19–720

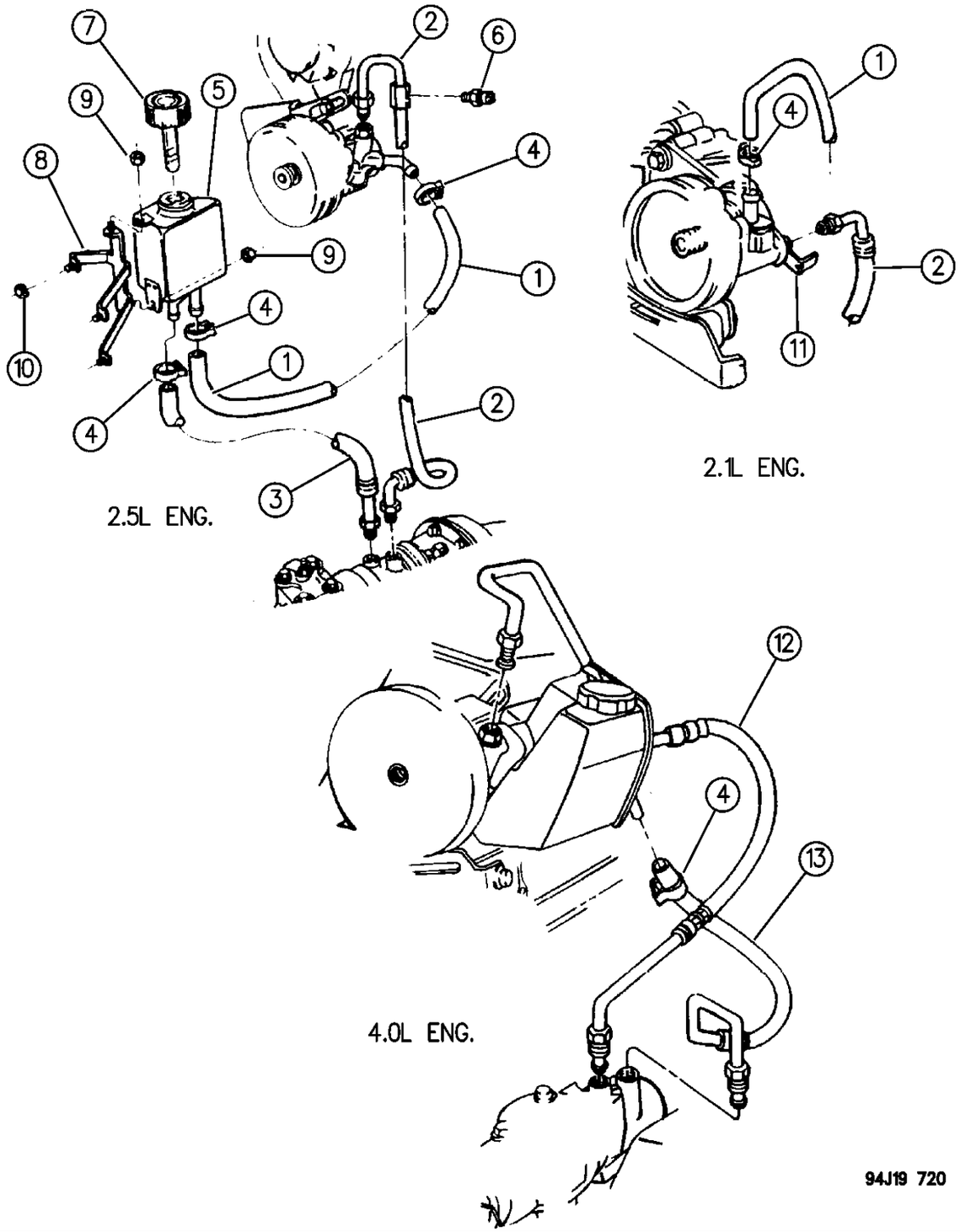

ITEM	PART NUMBER	QTY	BODY	MODEL	DESCRIPTION
	5203 7645	1			w/4.0L Eng.
	5208 7797	1			w/RHD 1994
	5202 8427	1			w/RHD 1995
	5208 7892	1			w/RHD 1996
	5200 5280	1	ZJ		w/4.0L Eng.
	5305 4133	1	ZG		w/4.0L Eng. (RHD)
	5208 7748	1	ZJ		w/5.2L Eng.
-	4762 271	1			COOLER, Power Steering w/MIDEAST Package.
-	5305 4418	1	ZG		BRACKET, Hose To Engine w/4.0L Eng.

MODEL CODES:

72=2 DR Wagon
74=4 DR Wagon
77=Open Body 93" Whlbase
78=Open Body 103" Whlbase - Export
T=2WD
J,N=4WD
U=4WD (RHD)

BODY STYLES:

YJ=Wrangler (4X4) "S"
Weangler (4X4) SE
Wrangler (4X4) Sahara
Wrangler (4X4) Renegade
XJ=Cherokee SE
Cherokee Sport
Cherokee Country
ZJ=Grand Cherokee SE
Grand Cherokee Laredo
Grand Cherolee Limited
ZG=Grand Cherokee European
Y1=Wrangler
X1=Cherokee
Z1=Grand Cherokee
KDX=Vehicles

AR = Use as Required - = Non Illustrated Part P.A.R. = Paint as Required

SAGIPARTS

GROUP-21M
MANUAL TRANSMISSION (AISIN)

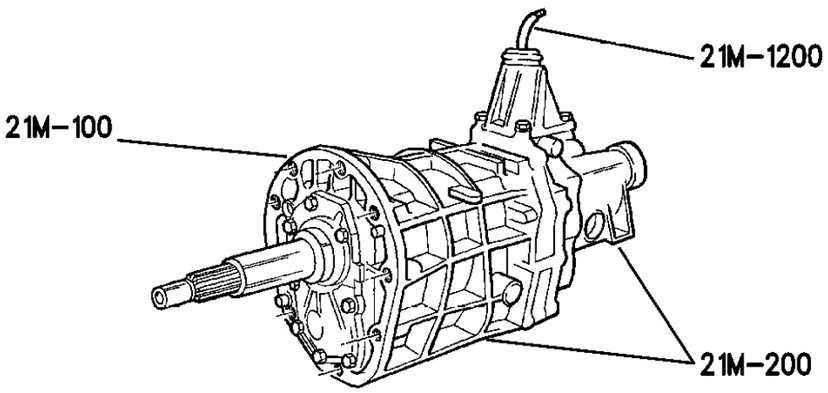

21M-100 TRANSMISSION ASSY 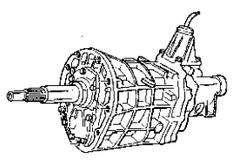	**21M-200** CASE & EXTENSION 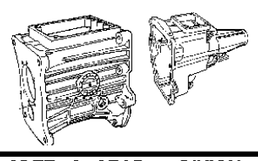	**21M-400** GEAR TRAIN 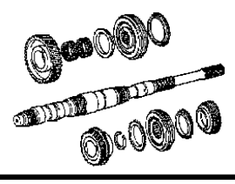	**21M-900** FORKS & RAILS 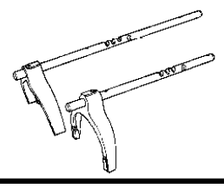
21M-1200 GEAR SHIFT CONTROLS	SPEEDO GEAR & PINION SEE GROUP-21-P PINIONS		

GROUP 21M - TRANS. MANUAL 5 SPEED

ILLUSTRATION TITLE — **GROUP-FIG. NO.**

TRANSMISSION ASSEMBLY
MANUAL TRANSMISSION . . . . . Fig. 21M-110

CASE AND EXTENSION
CASE, EXTENSION & MISCELLANEOUS PARTS FOUR CYLINDER GAS OR DIESEL ENGINE, FIVE SPEED TRANSMISSION - AISIN . . . . . Fig. 21M-210
CASE, ADAPTER/EXTENSION & MISC. PARTS,4.0L GAS ENGINE, 2.5 DIESEL ENGINE . . . . . Fig. 21M-215

GEAR TRAIN
GEAR TRAIN, MANUAL TRANSMISSION FOUR CYLINDER GAS OR DIESEL ENGINE, FIVE SPEED TRANSMISSION - AISIN . . . . . Fig. 21M-410
GEAR TRAIN, 4.0L GAS ENGINE, 2.5 DIESEL ENGINE . . . . . Fig. 21M-415
GEAR TRAIN, REVERSE IDLER, 4.0L GAS ENGINE, 2.5 DIESEL ENGINE . . . . . Fig. 21M-420

FORKS AND RAILS
FORKS, RAILS, SHAFTS, MANUAL TRANSMISSION FOUR CYLINDER GAS OR DIESEL ENGINE, FIVE SPEED TRANSMSISSION - AISIN . . . . . Fig. 21M-910
FORKS, RAILS, SHAFTS, 4.0L GAS ENGINE, 2.5 DIESEL ENGINE . . . . . Fig. 21M-915

GEAR SHIFT CONTROLS
CONTROLS, GEARSHIFT FIVE SPEED TRANSMISSION WRANGLER, YJ . . . . . Fig. 21M-1210
CONTROLS, GEARSHIFT FIVE SPEED TRANSMISSION CHEROKEE . . . . . Fig. 21M-1215
GEAR SHIFT CONTROLS - FLOOR SHIFT GRAND CHEROKEE . . . . . Fig. 21M-1220

MANUAL TRANSMISSION
Figure 21M-110

21M-110

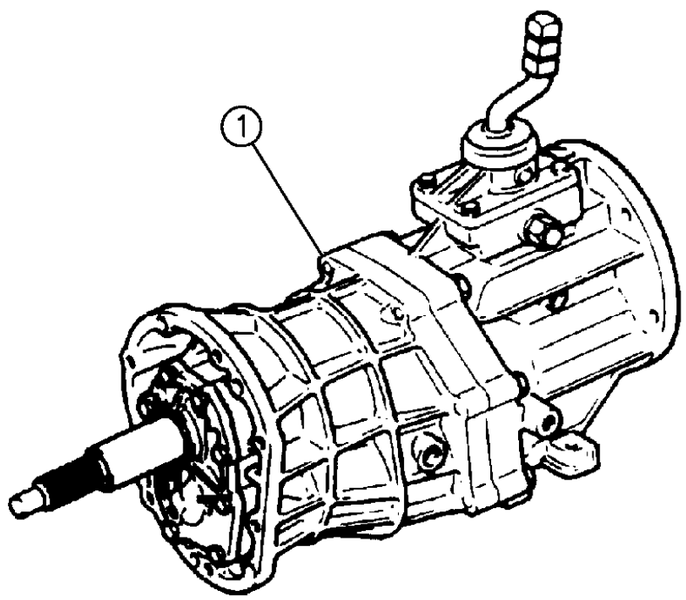

94J40 110

ITEM	PART NUMBER	QTY	BODY	MODEL	DESCRIPTION
1					TRANSMISSION ASSEMBLY
					5 SPEED
	5210 8022	1	XJ		2.1 Turbo Diesel Engine 1994
	5210 8121	1	X1,XJ		2.5 Turbo Diesel Engine. 1995
	5210 8049	1	YJ,Y1		2.5L Four Cylinder Engine, 4WD
	5210 8045	1	XJ, X1		2.5L Four Cylinder Engine, 2WD
	5210 8046	1	X1		2.5L Four Cylinder Engine, 4WD, EGYPT, MALAYSIA
	5210 8046	1	XJ		2.5L Four Cylinder Engine, 4WD
	5210 8021	1	X1		2.5L Four Cylinder Engine, 4WD, CHINA, ARGENTINA,
					VENEZUELA, MALAYSIA, EGYPT
	5210 8050	1	Y1, YJ		4.0L Six Cylinder Engine
	5210 8048	1	XJ, X1		4.0L Six Cylinder Engine, 2WD
	5210 8047	1	XJ, X1		4.0L Six Cylinder Engine, 4WD
	5300 9526	1	ZGZJZ1		4.0L Six Cylinder Engine
	5210 9021	1	ZGZ1		2.5 Turbo Diesel

MODEL CODES:

72=2 DR Wagon
74=4 DR Wagon
77=Open Body 93" Whlbase
78=Open Body 103" Whlbase - Export
T=2WD
J,N=4WD
U=4WD (RHD)

BODY STYLES:

YJ=Wrangler (4X4) "S"
Weangler (4X4) SE
Wrangler (4X4) Sahara
Wrangler (4X4) Renegade
XJ=Cherokee SE
Cherokee Sport
Cherokee Country
ZJ=Grand Cherokee SE
Grand Cherokee Laredo
Grand Cherolee Limited
ZG=Grand Cherokee European
Y1=Wrangler
X1=Cherokee
Z1=Grand Cherokee
KDX=Vehicles

AR = Use as Required - = Non Illustrated Part P.A.R. = Paint as Required

« RETURN TO GROUP INDEX

SE, EXTENSION & MISCELLANEOUS PARTS FOUR CYLINDER GAS OR DIESEL ENGINE, FIVE SPEED TRANSMISSION - AISIN
Figure 21M-210

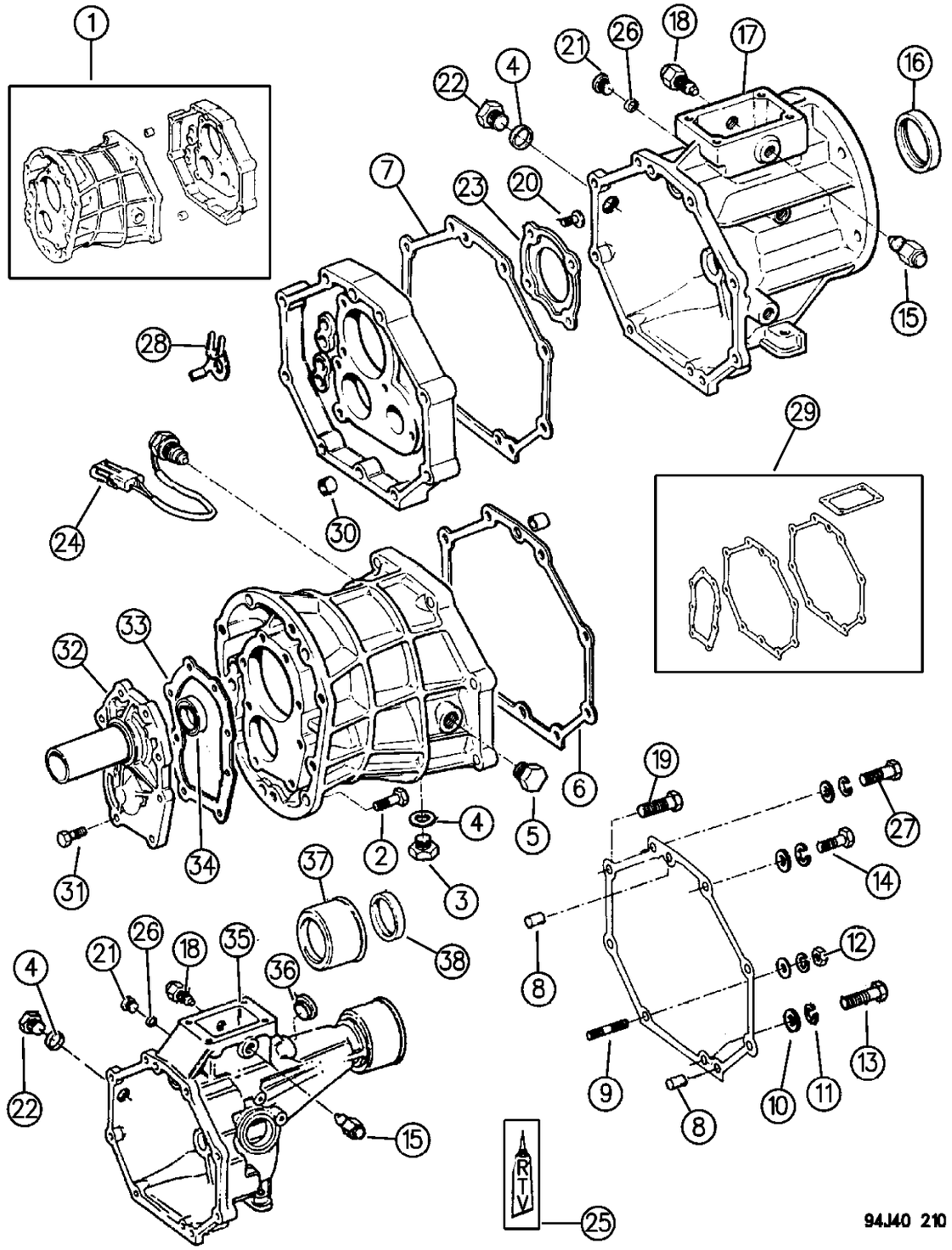

ITEM	PART NUMBER	QTY	BODY	MODEL	DESCRIPTION
1	8350 6016	1			CASE, Transmission ***
2					BOLT, Case
	3420 1914	9			Gas
	3420 2317	9			Diesel
3	4543 303	1			PLUG, Drain
4	8350 0513	2			GASKET, Plug
5	8350 0509	1			PLUG
6	8350 0506	1			GASKET, Intermediate Front
7	8350 0507	1			GASKET, Adapter
8	8350 0504	4			PIN
9	8350 0618	1			STUD
10	8350 0627	1			WASHER
11	8350 0626	1			WASHER
12	8350 0625	1			NUT
13	8350 3547	1			BOLT, With Washer
14	8350 3549	3			BOLT
15	5252 921	1			PIN ASSEMBLY, Reverse Restrict, Left ***
16	8350 3108	1			SEAL, Adapter
17					ADAPTER, Transmission 4WD
	8350 6037	1	XJ		w/2.1 Turbo Diesel Engine
	8350 6038	1	X1,XJ		
	4897 133AA	1	Y1,YJ		
18	8350 0515	1			PIN, Reverse, Right
19	8350 3548	1			BOLT, With Washer
20	8350 0511	4			SCREW
21	8350 0628	1			PLUG, Sensor
22	8350 0623	1			PLUG, Filler
23	8350 6034	1			RETAINER, Bearing Countershaft Rear
24	8350 0629	1			SWITCH, Back Up Lamp
25	4318 025	1			SEALER, Gasket ***
26	3300 0322	1			GASKET
27	8350 0972	2			BOLT
28	8350 3551	1			CLAMP
29	8350 0632	1			GASKET PACKAGE, Transmission Overhaul
30	8350 0539	2			PIN, King
31	3420 1818	8			BOLT
32					RETAINER
	4746 025	1			Gas
	8350 2684	1			Diesel
33	8350 0505	1			GASKET
34	8350 6045	1			SEAL, Retainer
	5252 053	1		ZG	SEAL,Frt.Retn w/Trans 52109021

MODEL CODES:

72=2 DR Wagon
74=4 DR Wagon
77=Open Body 93" Whlbase
78=Open Body 103" Whlbase - Export
T=2WD
J,N=4WD
U=4WD (RHD)

BODY STYLES:

YJ=Wrangler (4X4) "S"
Weangler (4X4) SE
Wrangler (4X4) Sahara
Wrangler (4X4) Renegade
XJ=Cherokee SE
Cherokee Sport
Cherokee Country
ZJ=Grand Cherokee SE
Grand Cherokee Laredo
Grand Cherolee Limited
ZG=Grand Cherokee European
Y1=Wrangler
X1=Cherokee
Z1=Grand Cherokee
KDX=Vehicles

AR = Use as Required - = Non Illustrated Part P.A.R. = Paint as Required

SE, EXTENSION & MISCELLANEOUS PARTS FOUR CYLINDER GAS OR DIESEL ENGINE, FIVE SPEED TRANSMISSION - AISIN
Figure 21M-210

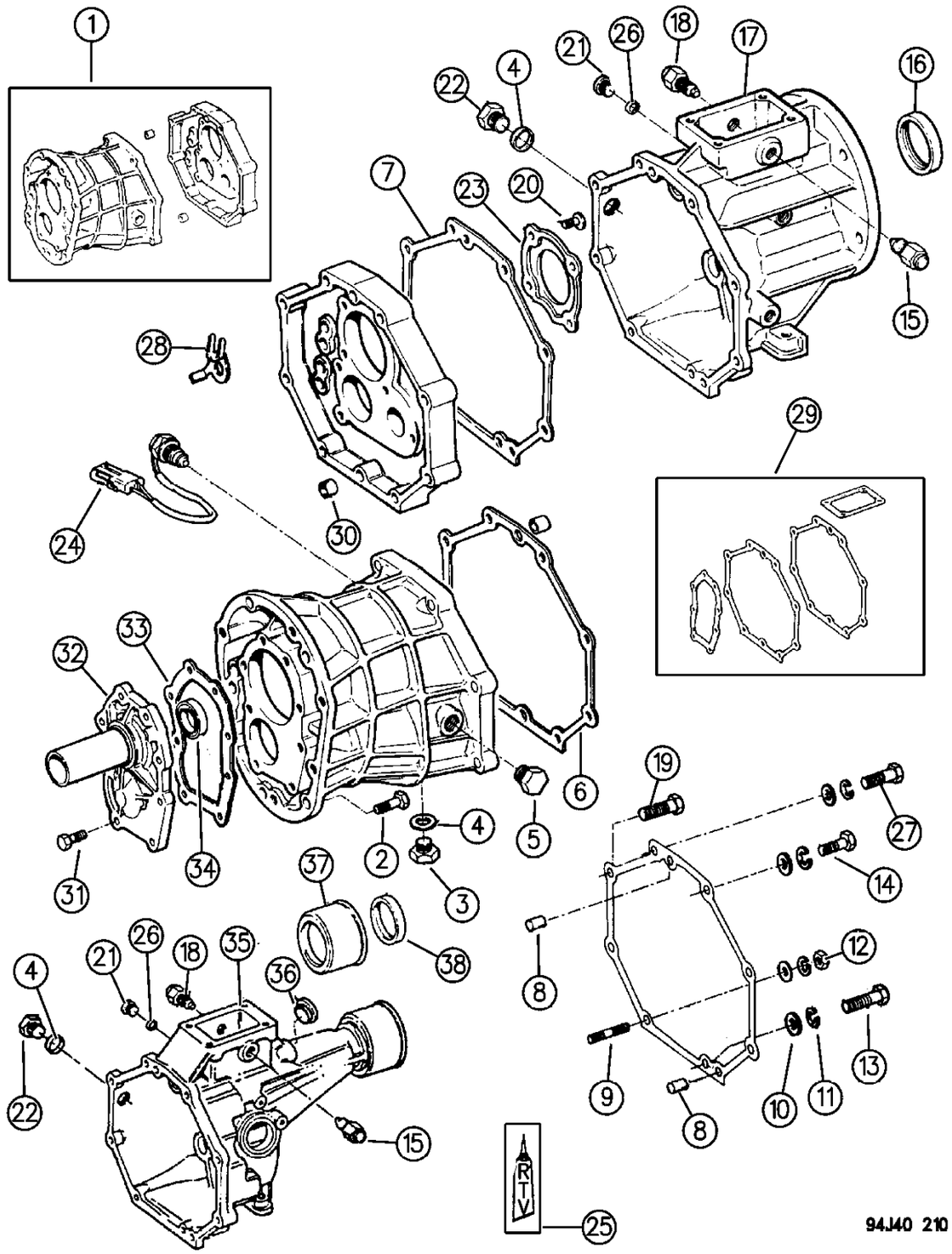

ITEM	PART NUMBER	QTY	BODY	MODEL	DESCRIPTION
35	8350 6014	1	X1,XJ		HOUSING ASSEMBLY, Extension 2WD ***
36	8350 2124	1			PLUG 2WD
37	8350 2123	1			DEFLECTOR 2WD ***
38	8350 2118	1			SEAL, Extension Housing Assembly, 2WD

MODEL CODES:

72=2 DR Wagon
74=4 DR Wagon
77=Open Body 93" Whlbase
78=Open Body 103" Whlbase - Export
T=2WD
J,N=4WD
U=4WD (RHD)

BODY STYLES:

YJ=Wrangler (4X4) "S"
Weangler (4X4) SE
Wrangler (4X4) Sahara
Wrangler (4X4) Renegade

XJ=Cherokee SE
Cherokee Sport
Cherokee Country

ZJ=Grand Cherokee SE
Grand Cherokee Laredo
Grand Cherolee Limited
ZG=Grand Cherokee European

Y1=Wrangler
X1=Cherokee
Z1=Grand Cherokee
KDX=Vehicles

AR = Use as Required - = Non Illustrated Part P.A.R. = Paint as Required

CASE, ADAPTER/EXTENSION & MISC. PARTS,4.0L GAS ENGINE, 2.5 DIESEL ENGINE
Figure 21M-215

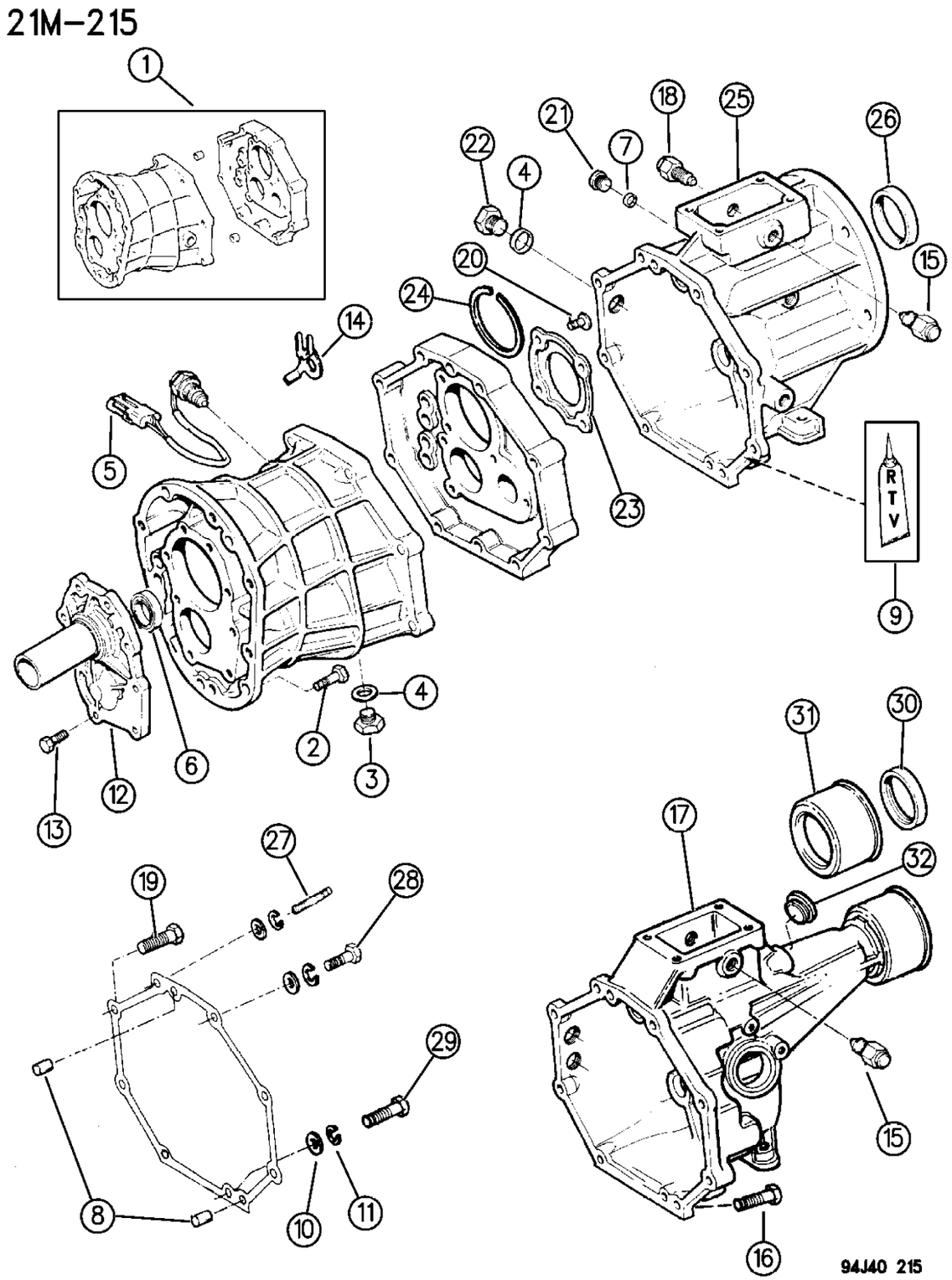

ITEM	PART NUMBER	QTY	BODY	MODEL	DESCRIPTION
1	5252 034	1			CASE, Transmission
2	3420 1914	AR			BOLT, (M10x1.25x45mm)
3	8350 0512	1			PLUG, Drain
4	8350 0513	2			GASKET, Plug
5	8350 0629	1			SWITCH, Back-up
6	5252 053	1			SEAL, Retainer
7	3300 0322	1			GASKET
8	8350 0504	1			PIN
9	4318 025	1			SEALER, Gasket-in-a-tube ***
10	8350 0627	AR			WASHER
11	8350 0626	AR			WASHER
12	4636 382	1	XJ,X1		RETAINER, Front Bearing
13	3420 1818	4			BOLT, With Washer, (M8x1.25x25mm)
14	8350 3551	1			CLAMP
15	8350 0516	1			PIN, Reverse
16	8350 6227	2			BOLT
17	8350 6225	1	XJ,X1		EXTENSION, Housing, 2WD
18	5252 039	1			PIN, Reverse Restrict
19	8350 3548	2			BOLT, With Washer
20	3420 1818	4			BOLT, With Washer, (M8x1.25x25mm)
21	8350 0628	1			PLUG, Sensor
22	8350 0623	1			PLUG, Filler
23	5252 036	1			RETAINER, Output Shaft Rear Bearing
24	8350 6221	1			SNAP RING
25					ADAPTER, 4WD
	4636 372	1	X1,XJ		
	4636 373	1	YJ,Y1		
26	8350 3108	1			SEAL, Adapter
27	8350 0972	2			STUD, (M10x1.25x105mm)
28	8350 3549	5			BOLT
29	8350 3547	5			BOLT, With Washer
30	8350 2118	1			SEAL, Extension Housing, 2WD
31	8350 2123	1			DEFLECTOR, Extension Housing, 2WD ***
32	8350 2124	1			PLUG, 2WD

MODEL CODES:

72=2 DR Wagon
74=4 DR Wagon
77=Open Body 93" Whlbase
78=Open Body 103" Whlbase - Export
T=2WD
J,N=4WD
U=4WD (RHD)

BODY STYLES:

YJ=Wrangler (4X4) "S"
Weangler (4X4) SE
Wrangler (4X4) Sahara
Wrangler (4X4) Renegade
XJ=Cherokee SE
Cherokee Sport
Cherokee Country
ZJ=Grand Cherokee SE
Grand Cherokee Laredo
Grand Cherolee Limited
ZG=Grand Cherokee European
Y1=Wrangler
X1=Cherokee
Z1=Grand Cherokee
KDX=Vehicles

AR = Use as Required - = Non Illustrated Part P.A.R. = Paint as Required

« RETURN TO GROUP INDEX

GEAR TRAIN, MANUAL TRANSMISSION FOUR CYLINDER GAS OR DIESEL ENGINE, FIVE SPEED TRANSMISSION - AISIN
Figure 21M-410

21M-410B

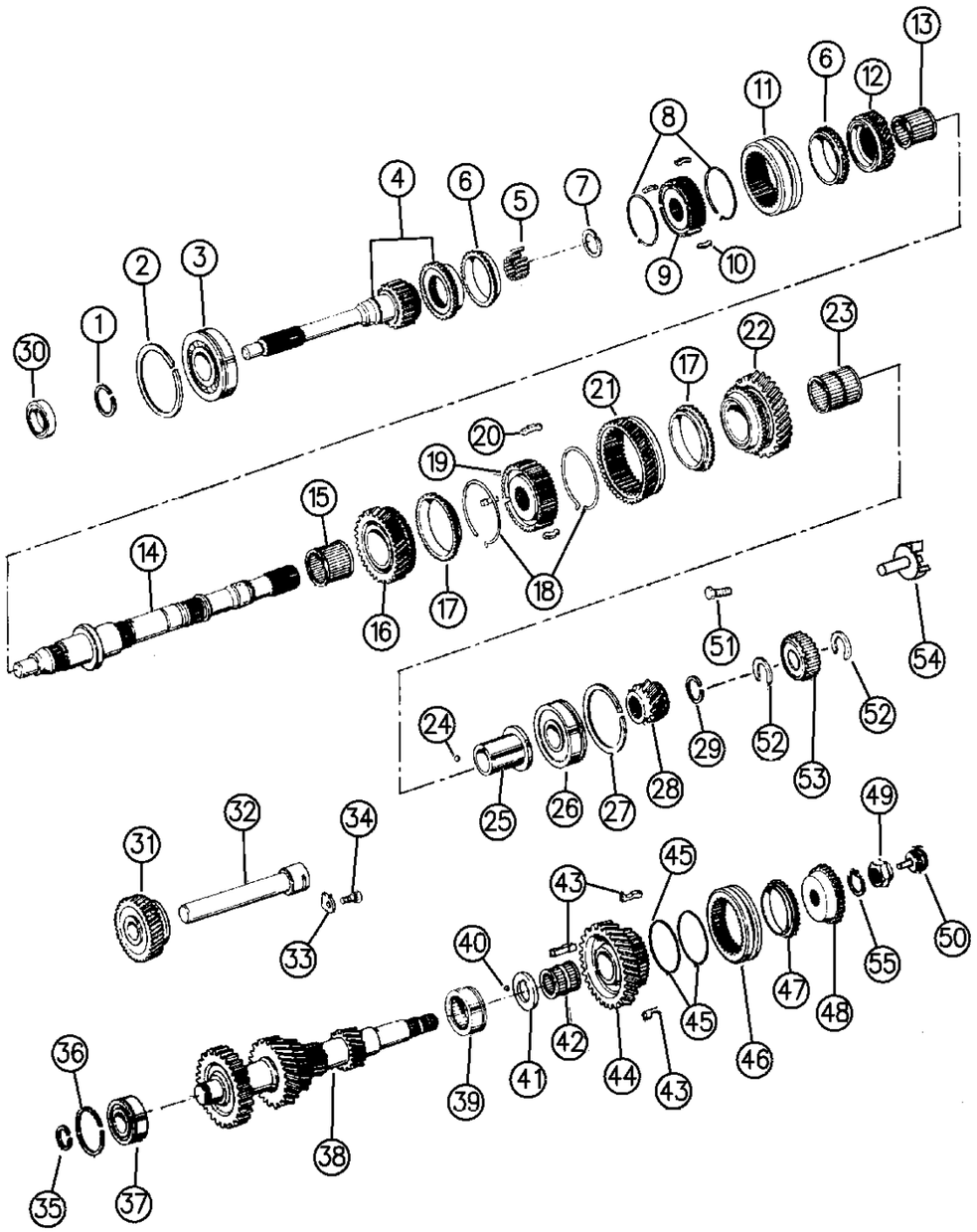

94J40 410A

ITEM	PART NUMBER	QTY	BODY	MODEL	DESCRIPTION
1					SNAP RING, Gear Train Shaft
	8350 0645	AR			2.05mm
	8350 0607	AR			2.10mm
	8350 0608	AR			2.15mm
	8350 0609	AR			2.20mm
	8350 0610	AR			2.25mm
	8350 0611	AR			2.30mm
2	8350 0614	1			SNAP RING, Bearing
3	8350 2681	1			BEARING
4					SHAFT, Input
	8350 6020	1			Gas
	8350 6021	1			Diesel
5	8350 2680	13			ROLLER, Input Gear Train
6	8350 0566	3			RING, Synchronizer
7					SNAP RING, Synchronizer Shift
	8350 0598	AR			1.75mm +.05
	8350 0599	AR			1.80mm +.05
	8350 0602	AR			1.85mm +.05
	8350 0603	AR			1.90mm +.05
	8350 0604	AR			1.95mm +.05
	8350 0605	AR			2.00mm +.05
	8350 0606	AR			2.05mm +.05
8	8350 0568	4			SPRING, Synchronizer
9	8350 6027	1			SYNCHRONIZER, Clutch, 3rd and 4th
10	8350 6029	1			KEY, Synchronizer Clutch
11	8350 6028	1			SLEEVE, Synchronizer Clutch, 1st and 2nd (Use 4740236)
12	8350 6019	1			GEAR, Third Speed
13	8350 0576	1			BEARING
14					SHAFT, Output
	8350 2117	1			2 Wheel Drive
	8350 3105	1			4 Wheel Drive
15	8350 0577	1			BEARING
16	8350 6018	1			GEAR, Second Speed
17	8350 0567	2			RING, Synchronizer
18	8350 0569	2			SPRING, Synchronizer
19	8350 0561	1			SYNCHRONIZER, 1st and 2nd Gear
20	8350 0564	3			KEY, Synchronizer
21	8350 0555	1			GEAR, Reverse
22	8350 6017	1			GEAR, First Speed
23	8350 6031	1			BEARING, First Gear
24	8350 0573	2			BALL, Reverse
25	8350 6026	1			RACE, First Gear

MODEL CODES:

72=2 DR Wagon
74=4 DR Wagon
77=Open Body 93" Whlbase
78=Open Body 103" Whlbase - Export
T=2WD
J,N=4WD
U=4WD (RHD)

BODY STYLES:

YJ=Wrangler (4X4) "S"
Weangler (4X4) SE
Wrangler (4X4) Sahara
Wrangler (4X4) Renegade
XJ=Cherokee SE
Cherokee Sport
Cherokee Country
ZJ=Grand Cherokee SE
Grand Cherokee Laredo
Grand Cherolee Limited
ZG=Grand Cherokee European
Y1=Wrangler
X1=Cherokee
Z1=Grand Cherokee
KDX=Vehicles

AR = Use as Required - = Non Illustrated Part P.A.R. = Paint as Required

GEAR TRAIN, MANUAL TRANSMISSION FOUR CYLINDER GAS OR DIESEL ENGINE, FIVE SPEED TRANSMISSION - AISIN
Figure 21M-410

21M-410B

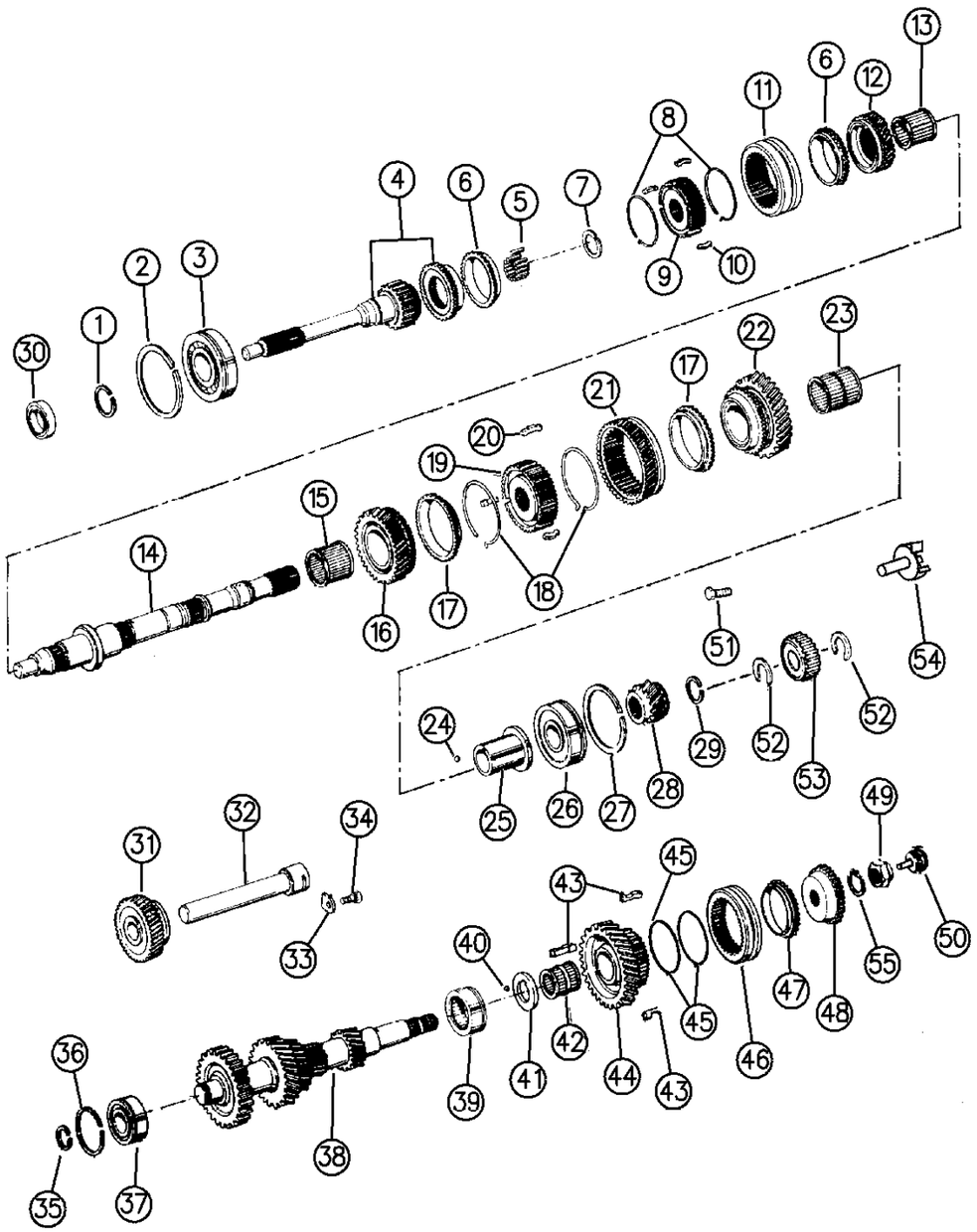

94J40 410A

ITEM	PART NUMBER	QTY	BODY	MODEL	DESCRIPTION
26	8350 6030	1			BEARING
27	8350 0613	1			SNAP RING
28					GEAR, Fifth Speed
	8350 0971	1			Without Diesel Engine J8S-890
	4637 318	1			With J8S-890 Diesel Engine only
	5252 083	1			w/52109021
29					SNAP RING, Shift
	8350 0587	AR			2.67mm/2.72mm
	8350 0588	AR			2.73mm/2.78mm
	8350 0589	AR			2.79mm/2.84mm
	8350 0590	AR			2.85mm/2.90mm
	8350 0591	AR			2.91mm/2.96mm
	8350 0592	AR			2.97mm/3.02mm
	8350 0593	AR			3.03mm/3.08mm
	8350 0594	AR			3.09mm/3.14mm
	8350 0595	AR			3.15mm/3.20mm
	8350 0596	AR			3.21mm/3.26mm
	8350 0597	AR			3.27mm/3.32mm
30	8350 6045	1			SEAL, Outer
31	8350 3555	1			GEAR, Reverse Idler
32	8350 0570	1			SHAFT, Reverse Idler
33	8350 0571	1			STOPPER, Reverse Idler
34	8350 0615	1			BOLT, With Washer
35					SNAP RING
	8350 0581	AR			2.05mm
	8350 0582	AR			2.10mm
	8350 0583	AR			2.15mm
	8350 0584	AR			2.20mm
	8350 0585	AR			2.25mm
	8350 0586	AR			2.30mm
36	8350 0612	1			SNAP RING, Shaft
37	8350 6032	1			BEARING
38	8350 6023	1			GEAR, Cluster Manual Transmission
	4796 003	1			w/52109021
39	8350 6033	1			BEARING, Cluster Gear
	4796 003	1			w/52109021
40	8350 0573	2			BALL, Reverse
41	8350 6025	1			WASHER
42	8350 0644	1			BEARING, Needle
43	8350 0641	3			KEY, Synchronizer, Shifting No. 3
44					GEAR, Countershaft Fifth
	8350 6022	1			Without Diesel Engine J8S-890

MODEL CODES:

72=2 DR Wagon
74=4 DR Wagon
77=Open Body 93" Whlbase
78=Open Body 103" Whlbase - Export
T=2WD
J,N=4WD
U=4WD (RHD)

BODY STYLES:

YJ=Wrangler (4X4) "S"
Weangler (4X4) SE
Wrangler (4X4) Sahara
Wrangler (4X4) Renegade
XJ=Cherokee SE
Cherokee Sport
Cherokee Country
ZJ=Grand Cherokee SE
Grand Cherokee Laredo
Grand Cherolee Limited
ZG=Grand Cherokee European
Y1=Wrangler
X1=Cherokee
Z1=Grand Cherokee
KDX=Vehicles

AR = Use as Required - = Non Illustrated Part P.A.R. = Paint as Required

GEAR TRAIN, MANUAL TRANSMISSION FOUR CYLINDER GAS OR DIESEL ENGINE, FIVE SPEED TRANSMISSION - AISIN
Figure 21M-410

21M-410B

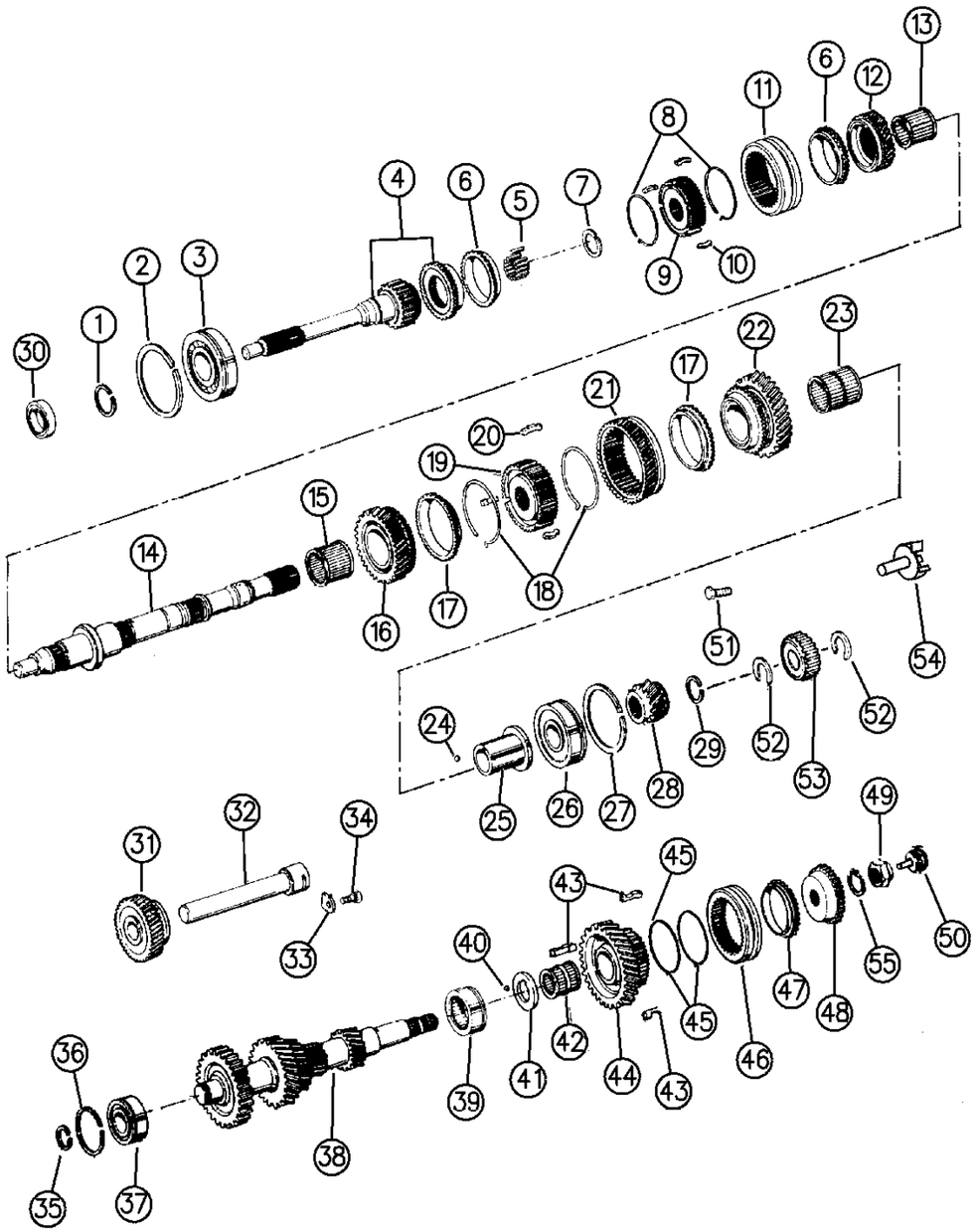

94J40 410A

ITEM	PART NUMBER	QTY	BODY	MODEL	DESCRIPTION
	4637 317	1			With J8S-890 Diesel Engine only, w/ Trans. # 52108022
	4637 527	1			w/52109021
45	8350 0568	4			SPRING, Synchronizer
46					SLEEVE, Synchronizer
	8350 0642	1			Up To 4/6/93
	4746 657	1			After 4/6/93
47	8350 0566	3			RING, Synchronizer
48	8350 6024	1			SPACER
49	8350 0572	1			NUT
50	8350 0646	1			PIPE, Oil Filler ***
51	8350 2126	1	XJ		BOLT, 2WD
52	8350 2125	2	XJ		RING, SNAP, 2WD
53	8350 2121	1	XJ		GEAR, Speedometer Drive, 2WD
54	8350 2122	1	XJ		PIPE, Oil Receiver, 2WD ***
55	8350 6035	1			RING, Snap Package

MODEL CODES:

72=2 DR Wagon
74=4 DR Wagon
77=Open Body 93" Whlbase
78=Open Body 103" Whlbase - Export
T=2WD
J,N=4WD
U=4WD (RHD)

BODY STYLES:

YJ=Wrangler (4X4) "S"
Weangler (4X4) SE
Wrangler (4X4) Sahara
Wrangler (4X4) Renegade
XJ=Cherokee SE
Cherokee Sport
Cherokee Country
ZJ=Grand Cherokee SE
Grand Cherokee Laredo
Grand Cherolee Limited
ZG=Grand Cherokee European
Y1=Wrangler
X1=Cherokee
Z1=Grand Cherokee
KDX=Vehicles

AR = Use as Required - = Non Illustrated Part P.A.R. = Paint as Required

GEAR TRAIN, 4.0L GAS ENGINE, 2.5 DIESEL ENGINE
Figure 21M-415

21M-415B

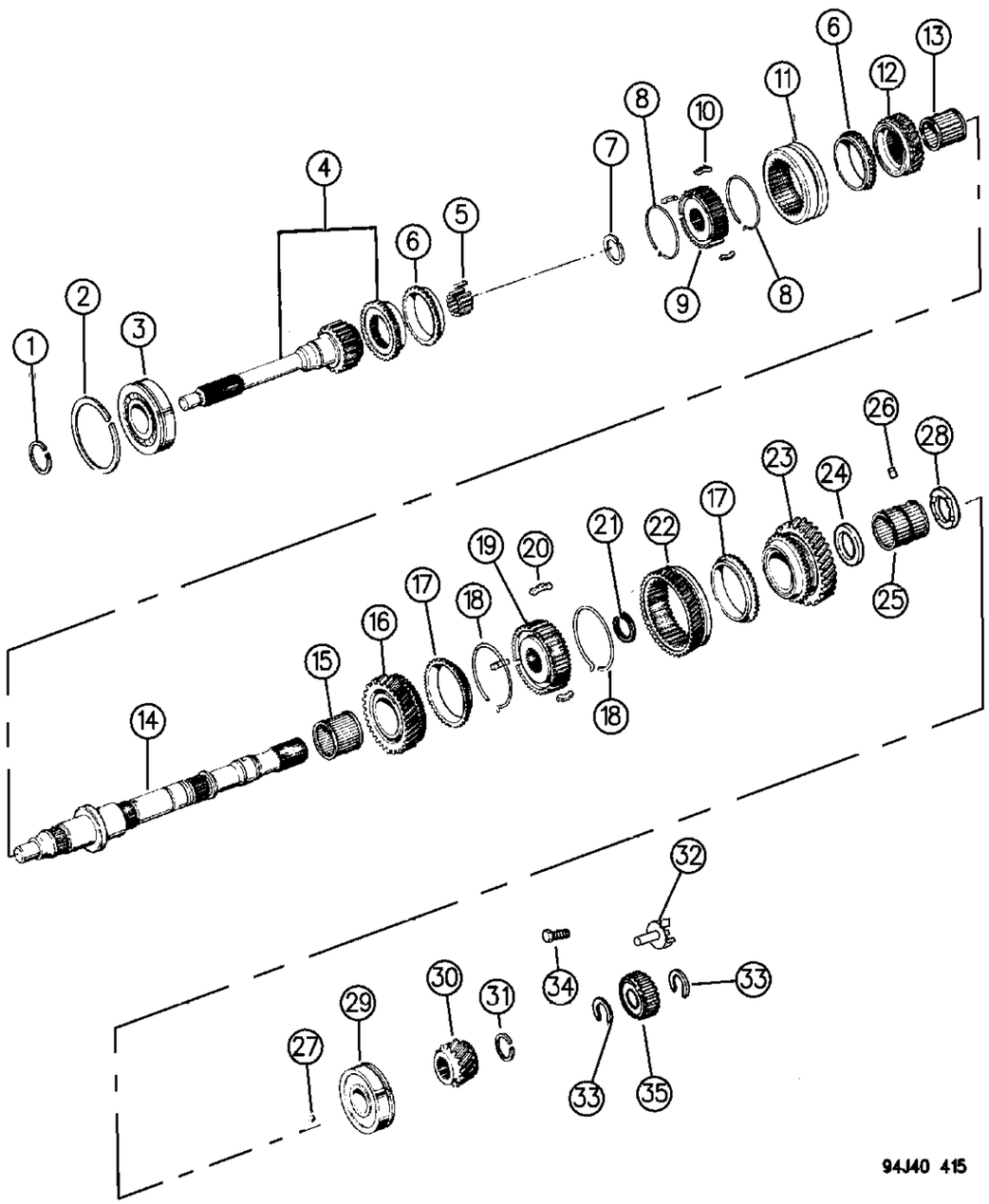

ITEM	PART NUMBER	QTY	BODY	MODEL	DESCRIPTION
1					SNAP RING, Input Shaft Bearing
	8350 6099	AR			Stamped A (X=2.10mm/2.15mm)
	8350 6214	AR			Stamped B (X=2.15mm/2.20mm)
	8350 6215	AR			Stamped C (X=2.20mm/2.25mm)
	8350 6216	AR			Stamped D (X=2.25mm/2.30mm)
	8350 6217	AR			Stamped E (X=2.30mm/2.35mm)
	8350 6218	AR			Stamped F (X=2.35mm/2.40mm)
	8350 6219	AR			Stamped G (X=2.40mm/2.45mm)
2	8350 6222	1			SNAP RING, Input Bearing, Case
3	8350 6074	1			BEARING, Input Shaft (92mmODx25.5mmWD)
4	4636 370	1			SHAFT, Input
5	8350 6078	1			BEARING, Input, Needle Roller, (36.4mmODx24mmWD)
6	8350 6253	3			RING, Synchronizer 3rd & 4th, No. 2
7					SNAP RING, Output Shaft, 3rd & 4th Synchronizer, Hub #2
	8350 6086	AR			Stamped A (X=1.80mm/1.85mm)
	8350 6087	AR			Stamped B (X=1.85mm/1.90mm)
	8350 6088	AR			Stamped C (X=1.90mm/1.95mm)
	8350 6089	AR			Stamped D (X=1.95mm/2.00mm)
	8350 6090	AR			Stamped E (X=2.00mm/2.05mm)
	8350 6091	AR			Stamped F (X=2.05mm/2.10mm)
	8350 6092	AR			Stamped G (X=2.10mm/2.15mm)
8	8350 6255	1			SPRING, Synchronizer
9	8350 6248	1			SYNCHRONIZER, 3rd and 4th Gear, Clutch Hub #2
10	8350 6251	3			KEY, Synchronizer, Shifting #2
11	8350 6249	1			SLEEVE, Synchronizer, N0. 2
12	5252 079	1			GEAR, Third
13	8350 6077	1			BEARING, Needle, 3rd Gear, (3.85mmODx36.2mmWD)
14					SHAFT, Output
	8350 6243	1			4WD (16-1/8" Lg)
	8350 6244	1			2WD (22-5/8" Lg)
15	8350 6076	1			BEARING, Needle Roller, 2nd Gear (52.8mmODx36mmWD)
16	4636 369	1			GEAR, Second ***
17	8350 6252	2			RING, Synchronizer 1st & 2nd Gear, No. 1
18	8350 6254	2			SPRING, Synchronizer Shifting Key
19	8350 6247	1			HUB, Synchronizer, Clutch Hub #1, 1st and 2nd Gear
20	8350 6250	3			KEY, Synchronizer, No. 1
21					SNAP RING, Output Shaft Synchronizer, Hub #1
	8350 6093	AR			Stamped B (X=2.35mm/2.40mm)
	8350 6094	AR			Stamped C (X=2.40mm/2.45mm)
	8350 6095	AR			Stamped D (X=2.45mm/2.50mm)
	8350 6096	AR			Stamped E (X=2.50mm/2.55mm)
	8350 6097	AR			Stamped F (X=2.55mm/2.60mm)

MODEL CODES:

72=2 DR Wagon
74=4 DR Wagon
77=Open Body 93" Whlbase
78=Open Body 103" Whlbase - Export
T=2WD
J,N=4WD
U=4WD (RHD)

BODY STYLES:

YJ=Wrangler (4X4) "S"
Weangler (4X4) SE
Wrangler (4X4) Sahara
Wrangler (4X4) Renegade

XJ=Cherokee SE
Cherokee Sport
Cherokee Country

ZJ=Grand Cherokee SE
Grand Cherokee Laredo
Grand Cherolee Limited
ZG=Grand Cherokee European

Y1=Wrangler
X1=Cherokee
Z1=Grand Cherokee
KDX=Vehicles

AR = Use as Required - = Non Illustrated Part P.A.R. = Paint as Required

GEAR TRAIN, 4.0L GAS ENGINE, 2.5 DIESEL ENGINE
Figure 21M-415

21M-415B

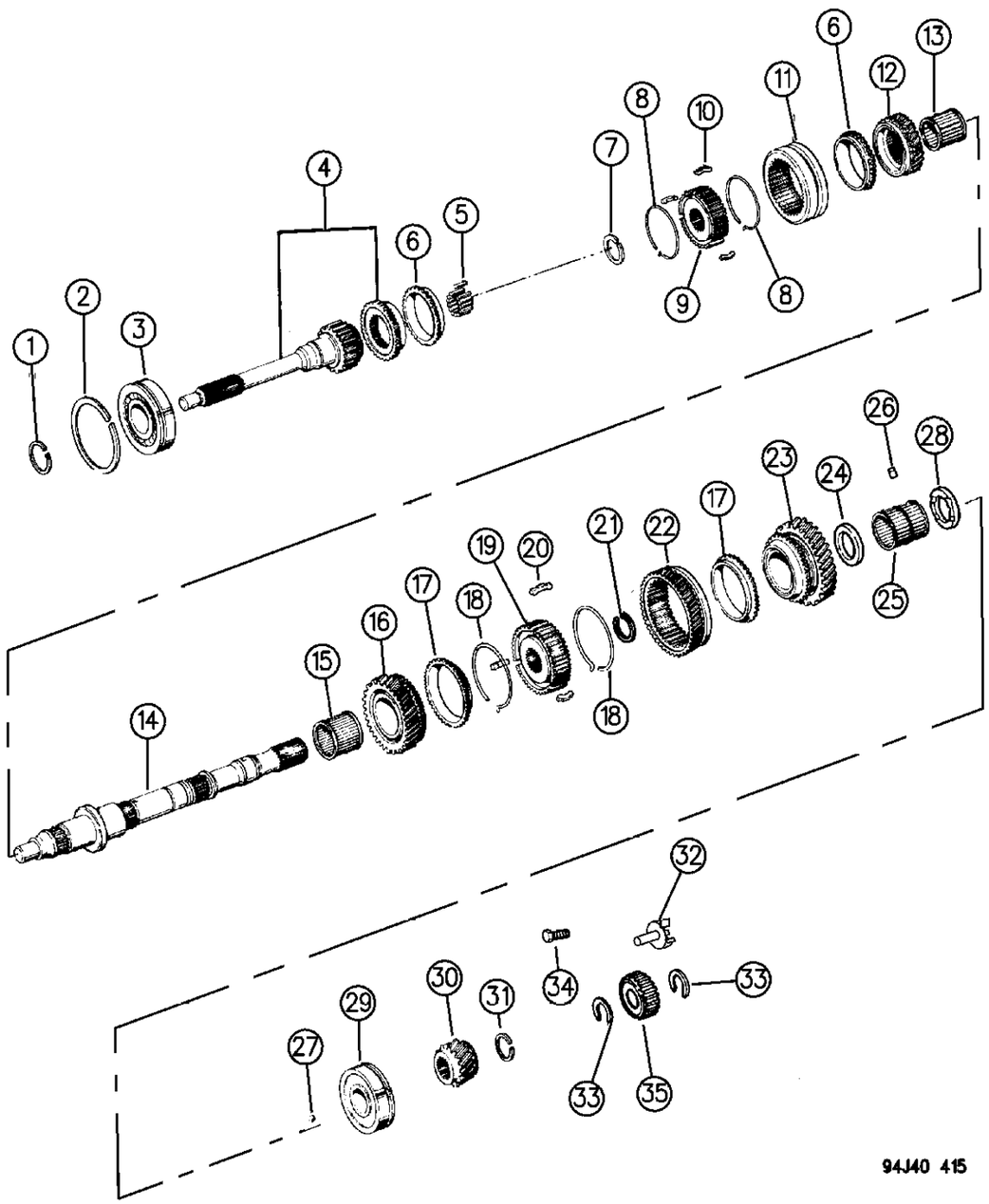

ITEM	PART NUMBER	QTY	BODY	MODEL	DESCRIPTION
	8350 6098	AR			Stamped G (X=2.60mm/2.65mm)
22	5252 082	1			GEAR, Reverse
23	4636 368	1			GEAR, First, ***
	4796 002	1			w/52108121
24	8350 6280	1			SPACER, Output Shaft 1st Gear
25	8350 6075	1			BEARING, Needle, 1st Gear, (45.8mmODx44.5mmWD)
26	8350 6008	1			PIN, Output Shaft 1st Gear
27	8350 0573	1			BALL, Reverse
28	8350 6246	1			WASHER, Thrust 1st Gear
29	8350 6073	1			BEARING, Output Shaft(85mmODx23mmWD)
30	5252 083	1			GEAR, Fifth
31					SNAP RING, Output Shaft 5th Gear
	8350 6268	AR			Stamped A (X=2.75mm/2.80mm)
	8350 6269	AR			Stamped B (X=2.80mm/2.85mm)
	8350 6270	AR			Stamped C (X=2.85mm/2.90mm)
	8350 6271	AR			Stamped D (X=2.90mm/2.95mm)
	8350 6272	AR			Stamped E (X=2.95mm/3.00mm)
	8350 6273	AR			Stamped F (X=3.00mm/3.05mm)
	8350 6274	AR			Stamped G (X=3.05mm/3.10mm)
	8350 6275	AR			Stamped H (X=3.10mm/3.15mm)
	8350 6276	AR			Stamped I (X=3.15mm/3.20mm)
	8350 6277	AR			Stamped I (X=3.20mm/3.25mm)
	8350 6278	AR			Stamped K (X=3.25mm/3.30mm)
	8350 6279	AR			Stamped L (X=3.30mm/3.35mm)
32	8350 0646	1	XJ		PIPE, Oil Receiver, 2WD ***
33	8350 6229	2	XJ		SNAP RING, 2WD
34	8350 6227	2	XJ		BOLT, With Washer, 2WD
35	8350 6228	1	XJ		GEAR, Speedometer Drive, 2WD

MODEL CODES:

72=2 DR Wagon
74=4 DR Wagon
77=Open Body 93" Whlbase
78=Open Body 103" Whlbase - Export
T=2WD
J,N=4WD
U=4WD (RHD)

BODY STYLES:

YJ=Wrangler (4X4) "S"
Weangler (4X4) SE
Wrangler (4X4) Sahara
Wrangler (4X4) Renegade

XJ=Cherokee SE
Cherokee Sport
Cherokee Country

ZJ=Grand Cherokee SE
Grand Cherokee Laredo
Grand Cherolee Limited
ZG=Grand Cherokee European

Y1=Wrangler
X1=Cherokee
Z1=Grand Cherokee
KDX=Vehicles

AR = Use as Required - = Non Illustrated Part P.A.R. = Paint as Required

GEAR TRAIN, REVERSE IDLER, 4.0L GAS ENGINE, 2.5 DIESEL ENGINE
Figure 21M-420

21M-420A

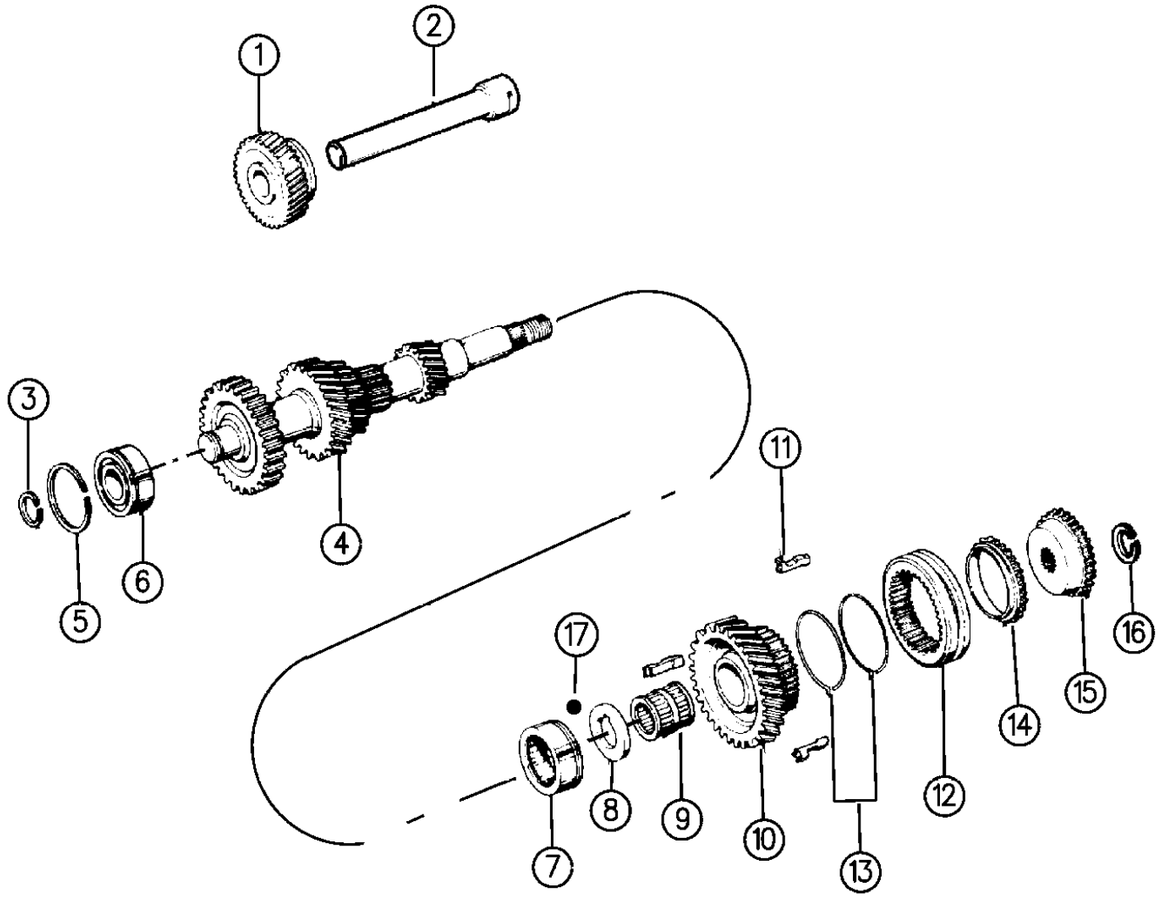

94J40 420

ITEM	PART NUMBER	QTY	BODY	MODEL	DESCRIPTION
1	5252 084	1			GEAR, Reverse Idler
2	8350 6258	1			SHAFT, Reverse Idler Gear
3					SNAP RING, Counter Shaft Front Bearing
	8350 6081	AR			Stamped A (X=2.00mm/2.05mm)
	8350 6082	AR			Stamped B (X=2.05mm/2.10mm)
	8350 6083	AR			Stamped C (X=2.10mm/2.15mm)
	8350 6084	AR			Stamped D (X=2.15mm/2.20mm)
	8350 6085	AR			Stamped E (X=2.20mm/2.25mm)
4	4636 371	1			GEAR, Cluster Counter
5	8350 6220	1			SNAP RING, Center Front Bearing, Case
6	8350 6259	1			BEARING, Front Roller, No. 1 (53mmODx24mmWD)
7	8350 6080	1			BEARING, Rear Countershaft Needle Roller (64mmODx22mmWD)
8	8350 6245	1			WASHER, Thrust, 5th Gear
9	8350 6079	1			BEARING, 5TH Counter Gear, Needle Roller, (34.85mmODx37.5mmWD)
10	4637 535	1			GEAR PACKAGE, Fifth Counter Gear, (Used up to Transmission Serial #00705123) ***
					CONSISTS Of:
					1 - 4637527 5th Counter Gear
					3 - 4637532 Key #3
					1 - 4637533 Ring #3
					1 - 4637534 Spring #3
	4637 527	1			GEAR, 5TH Counter, (Used after Transmission Serial #00705123)
11					KEY, Synchronizer No. 3 5th Gear
	8350 6256	AR			Up to Transmission Serial #00705123
	4637 532	AR			After Transmission Serial #00705123
12	8350 6257	1			SLEEVE, Synchronizer No. 3, 5th Gear
13					SPRING, Synchronizer No. 3, 5th Gear
	8350 6254	1			Up to Transmission Serial #00705123
	4637 534	1			After Transmission Serial #00705123
	4637 534	1	ZJ		
14					RING, Synchronizer No. 3, 5th Gear
	8350 6253	AR			Up to Transmission Serial #00705123
	4637 533	AR			After Transmission Serial #00705123
	4637 533	AR	ZJ		
15	8350 6242	1			SPACER, /gear Spline No. 5
16					SNAP RING, Countershaft 5th Gear
	8350 6260	AR			Stamped A (X=2.80mm/2.85mm)
	8350 6261	AR			Stamped B (X=2.85mm/2.90mm)
	8350 6262	AR			Stamped C (X=2.90mm/2.95mm)

MODEL CODES:

72=2 DR Wagon
74=4 DR Wagon
77=Open Body 93" Whlbase
78=Open Body 103" Whlbase - Export
T=2WD
J,N=4WD
U=4WD (RHD)

BODY STYLES:

YJ=Wrangler (4X4) "S"
Weangler (4X4) SE
Wrangler (4X4) Sahara
Wrangler (4X4) Renegade
XJ=Cherokee SE
Cherokee Sport
Cherokee Country
ZJ=Grand Cherokee SE
Grand Cherokee Laredo
Grand Cherolee Limited
ZG=Grand Cherokee European
Y1=Wrangler
X1=Cherokee
Z1=Grand Cherokee
KDX=Vehicles

AR = Use as Required - = Non Illustrated Part P.A.R. = Paint as Required

GEAR TRAIN, REVERSE IDLER, 4.0L GAS ENGINE, 2.5 DIESEL ENGINE
Figure 21M-420

21M-420A

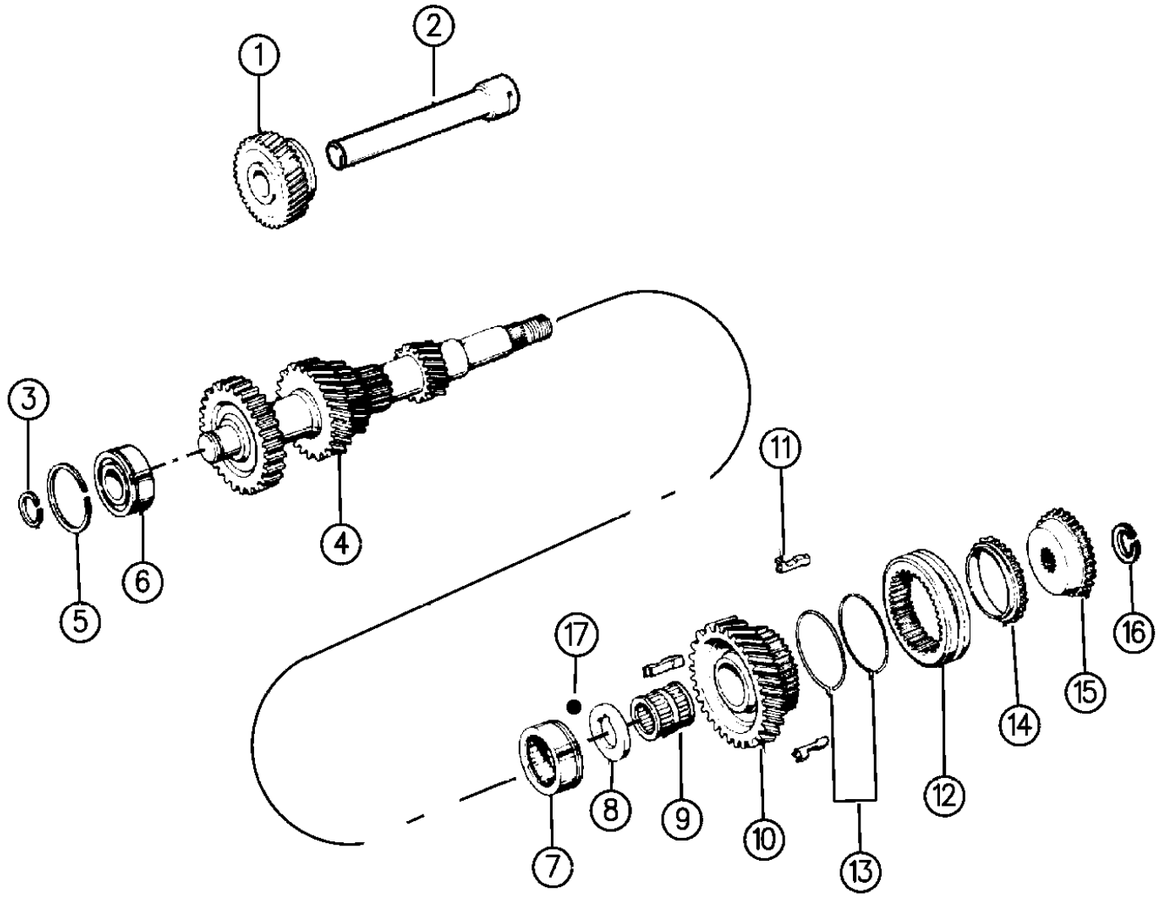

ITEM	PART NUMBER	QTY	BODY	MODEL	DESCRIPTION
	8350 6263	AR			Stamped D (X=2.95mm/3.00mm)
	8350 6264	AR			Stamped E (X=3.00mm/3.08mm)
	8350 6265	AR			Stamped F (X=3.05mm/3.10mm)
	8350 6266	AR			Stamped G (X=3.10mm/3.15mm)
	8350 6267	AR			Stamped H (X=3.15mm/3.20mm)
17	8350 0573	1			BALL, Reverse

MODEL CODES:

72=2 DR Wagon
74=4 DR Wagon
77=Open Body 93" Whlbase
78=Open Body 103" Whlbase - Export
T=2WD
J,N=4WD
U=4WD (RHD)

BODY STYLES:

YJ=Wrangler (4X4) "S"
Weangler (4X4) SE
Wrangler (4X4) Sahara
Wrangler (4X4) Renegade
XJ=Cherokee SE
Cherokee Sport
Cherokee Country
ZJ=Grand Cherokee SE
Grand Cherokee Laredo
Grand Cherolee Limited
ZG=Grand Cherokee European
Y1=Wrangler
X1=Cherokee
Z1=Grand Cherokee
KDX=Vehicles

AR = Use as Required - = Non Illustrated Part P.A.R. = Paint as Required

S, RAILS, SHAFTS, MANUAL TRANSMISSION FOUR CYLINDER GAS OR DIESEL ENGINE, FIVE SPEED TRANSMSISSION - AISIN
Figure 21M-910

21M-910B

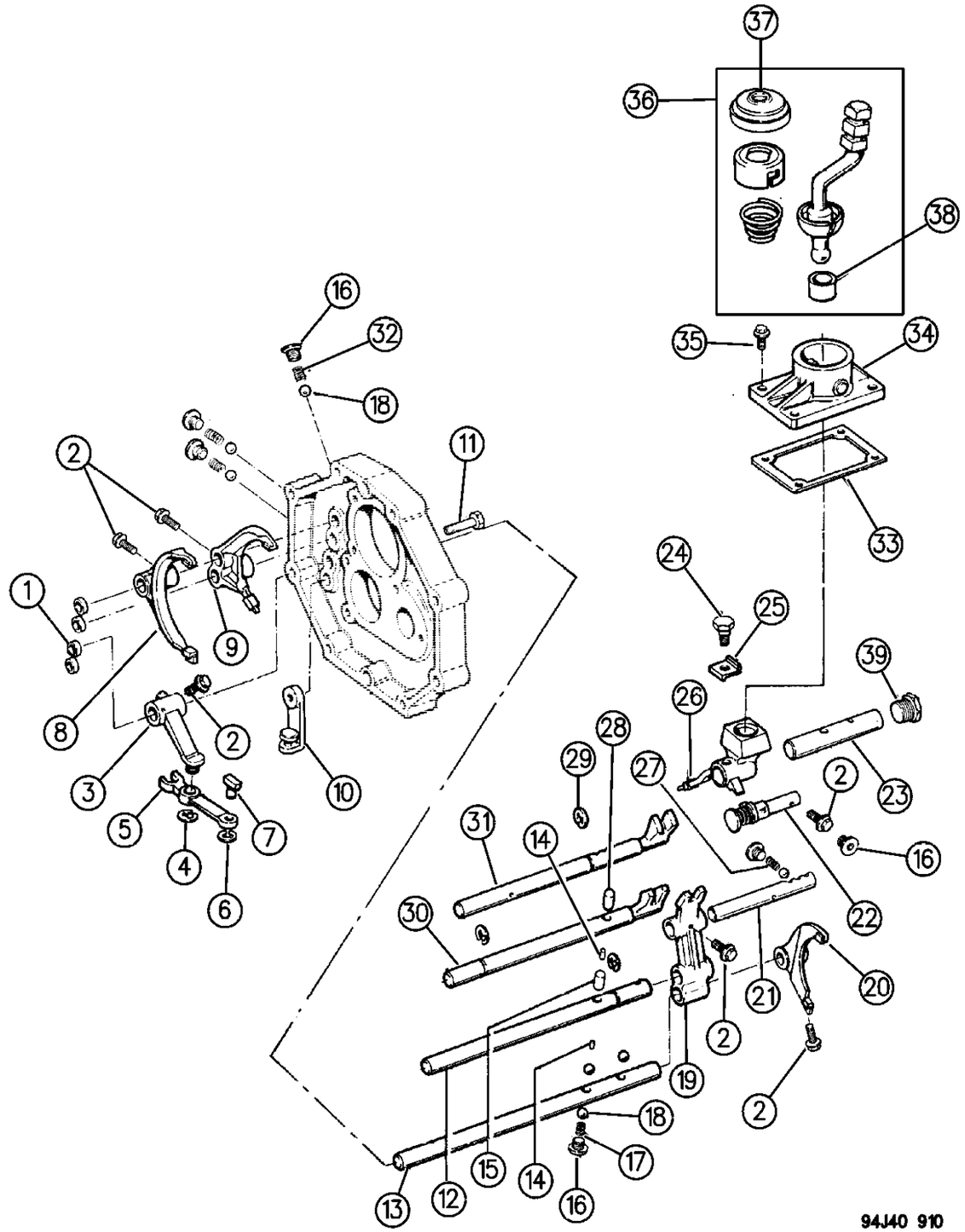

ITEM	PART NUMBER	QTY	BODY	MODEL	DESCRIPTION
1	8350 0503	4			PLUG
2	8350 2664	AR			BOLT, With washer
3	8350 0526	1			FORK, Reverse
4	8350 0548	1			RING, Retaining
5	8350 0529	1			ARM, Reverse Shift
6	8350 0547	1			RING, Retaining
7	8350 3552	1			SHOE, Shift Arm
8	4740 236	1			FORK, Gearshift No.2 ***
9	8350 2662	1			FORK, Gearshift No.1
10	8350 0531	1			BRACKET
11	8350 0549	2			BOLT, With Washer ***
12					SHAFT, Gearshift No.3
	8350 6052	1			Up To 4-1-93
	4746 659	1			After 4-1-93
13					SHAFT, Gearshift No.4
	8350 0538	1			Up To 4-1-93
	4746 660	1			After 4-1-93
14	8350 0537	4			PIN
15	8350 0541	1			ROLLER
16	8350 3109	6			PLUG
17	8350 0638	1			SPRING, Shift Compression
18	8350 0542	7			BALL
19	4746 658	1			HEAD, Reverse Shift, 3 Holes ***
20					FORK, Gearshift No.3 ***
	8350 0637	1			Up TO 4-1-93
	4746 656	1			After 4-1-93
21	8350 0536	1			SHAFT, Gearshift No.5
22	8350 0635	1			PIN, Reverse Restrict
23	8350 0514	1			SHAFT, Shift Lever
24	8350 6036	1			BOLT
25	8350 0523	1			WASHER, Lock
26	8350 0636	1			HOUSING, Shift Lever
27	8350 0544	1			SPRING
28	8350 0543	1			ROLLER
29					CLIP, Retaining
	8350 0546	3			1mm
	5252 076	3			1.5mm
30	8350 6055	1			SHAFT, Gearshift No.1
31	8350 6047	1			SHAFT, Gearshift No.2
32	8350 0545	3			SPRING
33	8350 0521	1			GASKET
34					RETAINER, Control Shift Lever

MODEL CODES:

72=2 DR Wagon
74=4 DR Wagon
77=Open Body 93" Whlbase
78=Open Body 103" Whlbase - Export
T=2WD
J,N=4WD
U=4WD (RHD)

BODY STYLES:

YJ=Wrangler (4X4) "S"
Weangler (4X4) SE
Wrangler (4X4) Sahara
Wrangler (4X4) Renegade
XJ=Cherokee SE
Cherokee Sport
Cherokee Country
ZJ=Grand Cherokee SE
Grand Cherokee Laredo
Grand Cherolee Limited
ZG=Grand Cherokee European
Y1=Wrangler
X1=Cherokee
Z1=Grand Cherokee
KDX=Vehicles

AR = Use as Required - = Non Illustrated Part P.A.R. = Paint as Required

21M-910B

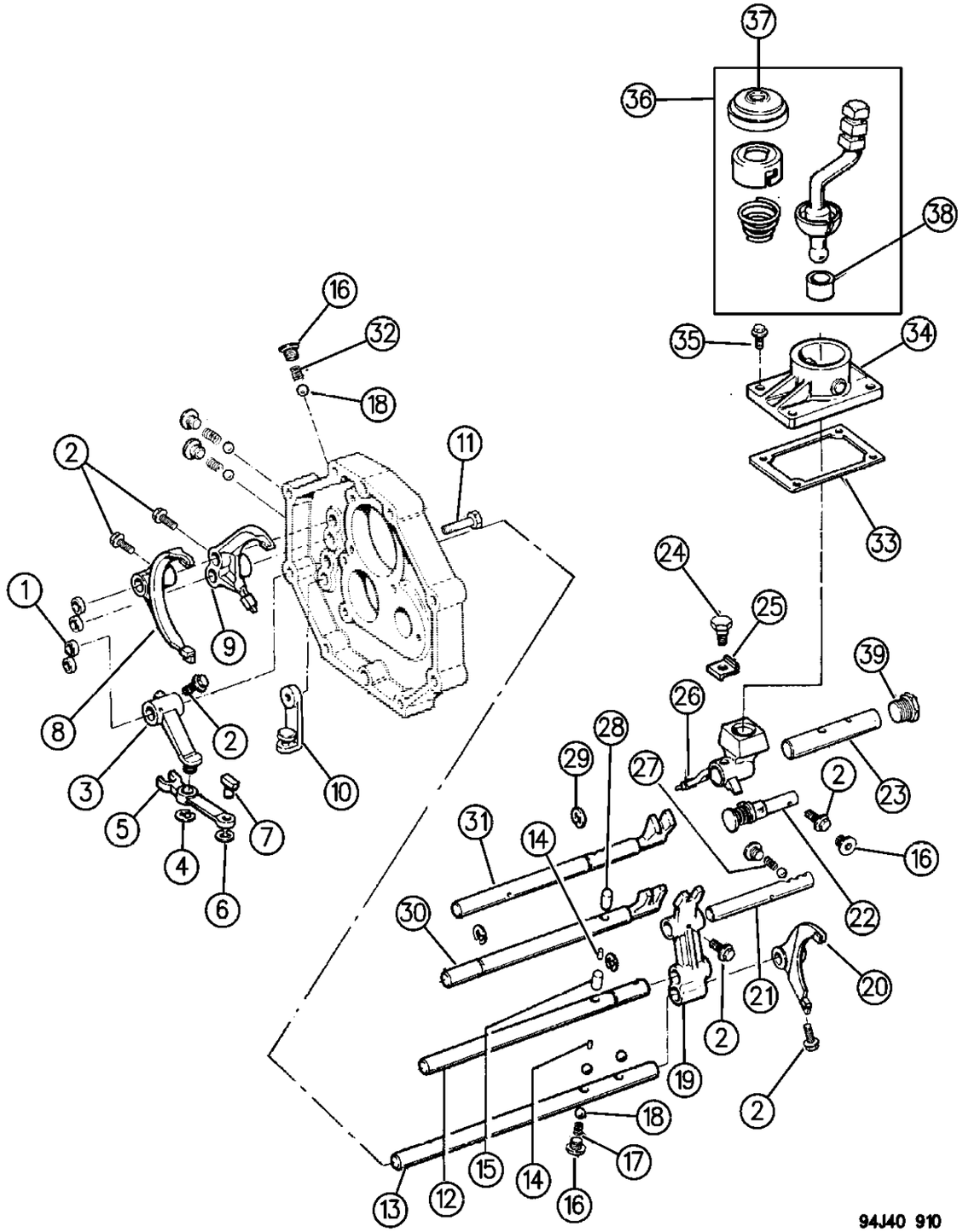

ITEM	PART NUMBER	QTY	BODY	MODEL	DESCRIPTION
	8350 3106	1	YJ		
	8350 0517	1	XJ		
35					BOLT
	8350 3107	4	YJ		
	8350 0525	4	XJ		
36					LEVER, Gearshift
	8350 3110	1	YJ		
	8350 0518	1	XJ		Gas
					Diesel ***
	8350 1407	1	XJ		
	4636 375	1	ZG,Z1		
	4882 668	1	ZG,Z1		1996 ***
37	8350 0520	1			BOOT
38	8350 0519	1			BUSHING
39	8350 0619	1			PLUG

MODEL CODES:

72=2 DR Wagon
74=4 DR Wagon
77=Open Body 93" Whlbase
78=Open Body 103" Whlbase - Export
T=2WD
J,N=4WD
U=4WD (RHD)

BODY STYLES:

YJ=Wrangler (4X4) "S"
Weangler (4X4) SE
Wrangler (4X4) Sahara
Wrangler (4X4) Renegade
XJ=Cherokee SE
Cherokee Sport
Cherokee Country
ZJ=Grand Cherokee SE
Grand Cherokee Laredo
Grand Cherolee Limited
ZG=Grand Cherokee European
Y1=Wrangler
X1=Cherokee
Z1=Grand Cherokee
KDX=Vehicles

AR = Use as Required - = Non Illustrated Part P.A.R. = Paint as Required

FORKS, RAILS, SHAFTS, 4.0L GAS ENGINE, 2.5 DIESEL ENGINE
Figure 21M-915

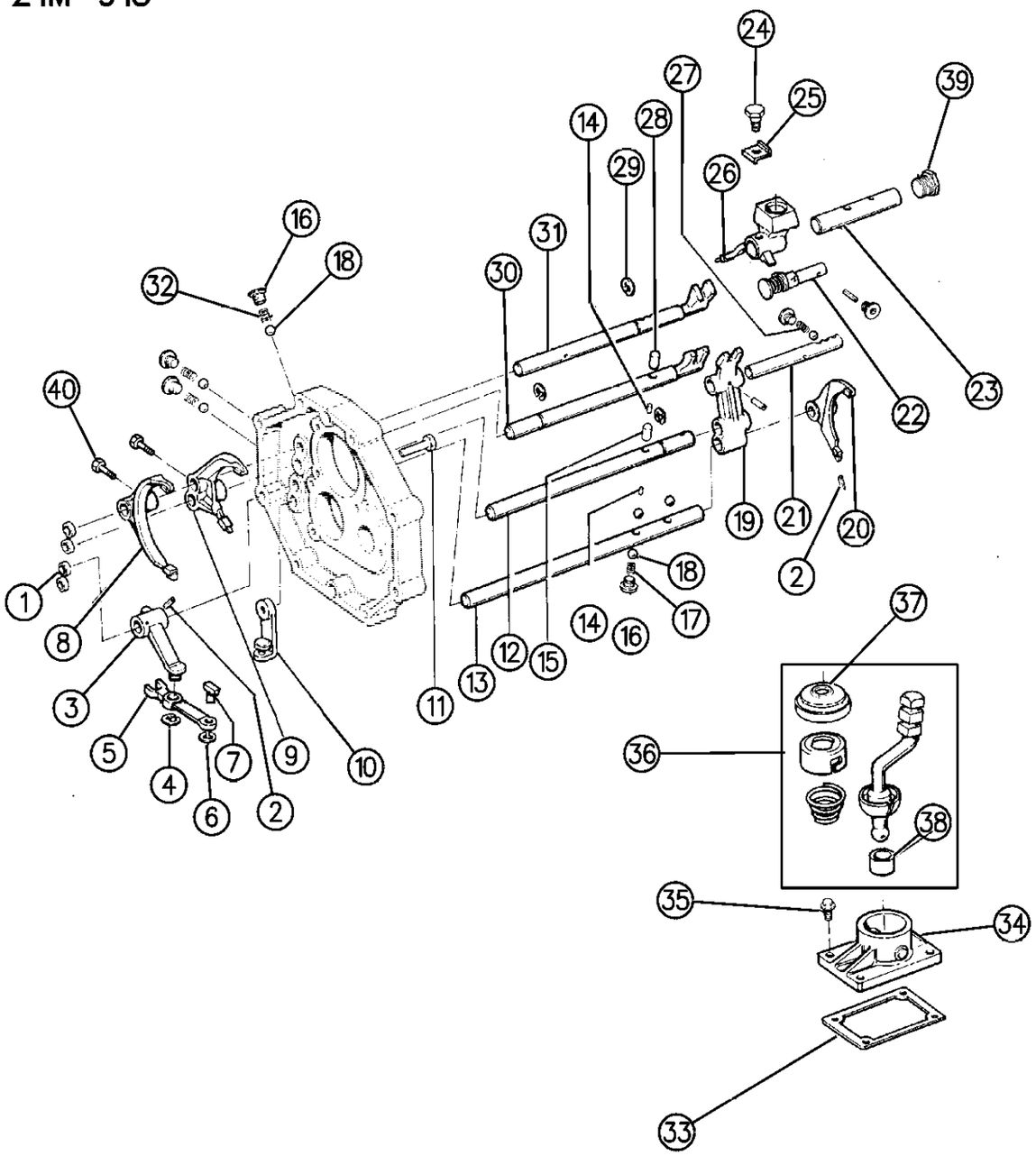

ITEM	PART NUMBER	QTY	BODY	MODEL	DESCRIPTION
1	8350 0503	4			PLUG, Shift Forks
2	8350 0540	AR			PIN
3	5252 056	1			FORK, Reverse
4	8350 0548	1			RING, Retaining
5	5252 060	1			ARM, Reverse Shift
6	8350 0547	1			RING, Retaining
7	5252 062	1			SHOE, Shift Arm
8	5252 058	1			FORK, Gear Shift No. 2
9	5252 057	1			FORK, Gear Shift No. 1
10	5252 063	1			BRACKET, Reverse Shift Arm
11	8350 0549	2			BOLT, Bearing Retainer
12	5252 070	1			SHAFT, Gear Shift No. 3
13					SHAFT, Gear Shift No. 4
	5252 071	1			Used with All Transmissions
	5252 071	1	ZJ		
14	8350 0537	4			PIN, Stright
15	8350 0541	1			PIN, Interlock (21.6mm)
16	8350 3109	6			PLUG
17	5252 075	1			SPRING, Compression
18	8350 0542	7			BALL, Gear Shift Fork Lock
19	5252 064	1			HEAD, Reverse Shift ***
20	5252 059	1			FORK, Gear Shift No. 3
21	5252 065	1			SHAFT, Gear Shift Fork No. 5
22	8350 0635	1			PIN, Reverse Restrict
23	5252 037	1			SHAFT, Shift Lever
24	3420 1373	1			BOLT, Shift Lever
25	8350 0523	1			WASHER, Lock
26	5252 041	1			HOUSING, Shift Lever
27	8350 0544	1			SPRING
28	8350 0543	1			Pin, Interlock (30.3mm) ***
29	5252 076	3			SNAP RING, Shift Fork
30	5252 066	1			SHAFT, Gear Shift No. 1
31	5252 068	1			SHAFT, Gear Shift No. 2
32	8350 0545	3			SPRING
33	5252 043	1			GASKET
34					RETAINER, Control Shift
	5252 054	1	YJ,ZJ		
	5252 040	1	XJ		
35					BOLT, Shift Lever Housing
	8350 0525	2	YJ		With Washer, Shift Control
	5252 211	2	YJ		Stud, With Washer
	8350 0525	4	XJ		With Washer, Shift Control

MODEL CODES:

72=2 DR Wagon
74=4 DR Wagon
77=Open Body 93" Whlbase
78=Open Body 103" Whlbase - Export
T=2WD
J,N=4WD
U=4WD (RHD)

BODY STYLES:

YJ=Wrangler (4X4) "S"
Weangler (4X4) SE
Wrangler (4X4) Sahara
Wrangler (4X4) Renegade
XJ=Cherokee SE
Cherokee Sport
Cherokee Country
ZJ=Grand Cherokee SE
Grand Cherokee Laredo
Grand Cherolee Limited
ZG=Grand Cherokee European
Y1=Wrangler
X1=Cherokee
Z1=Grand Cherokee
KDX=Vehicles

AR = Use as Required - = Non Illustrated Part P.A.R. = Paint as Required

FORKS, RAILS, SHAFTS, 4.0L GAS ENGINE, 2.5 DIESEL ENGINE
Figure 21M-915

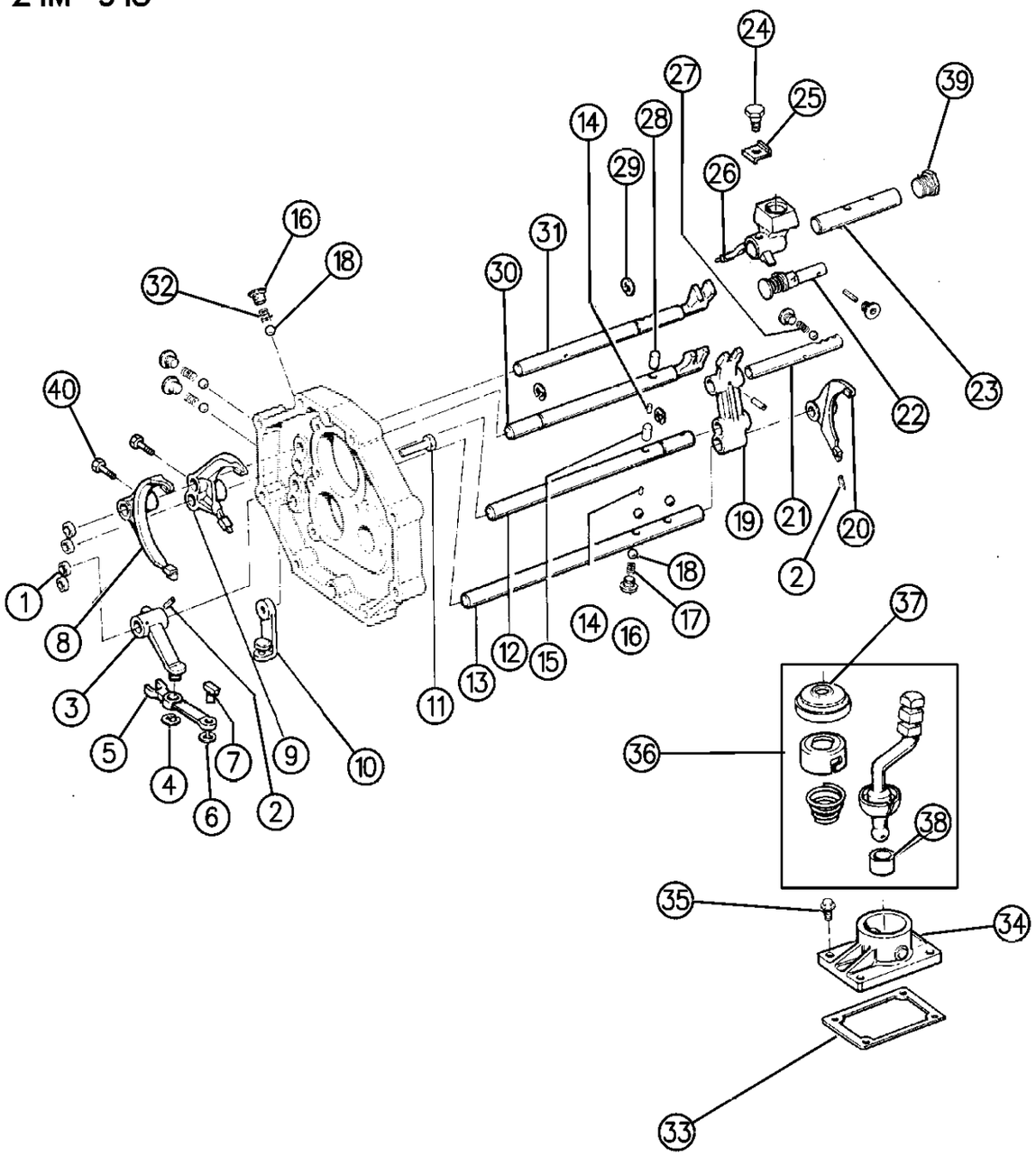

ITEM	PART NUMBER	QTY	BODY	MODEL	DESCRIPTION
36					LEVER ASSEMBLY, Gear Shift
	5252 055	1	YJ		
	5252 042	1	XJ		
	4636 375	1	ZJ		
	4796 004	1			w/52108121
37	8350 0520	1			BOOT, Gear Shift Lever
38	8350 0519	1			BUSHING, Gear Shift Lever
39	8350 0619	1			PLUG, 4WD
40	5252 214	3			BOLT

MODEL CODES:

72=2 DR Wagon
74=4 DR Wagon
77=Open Body 93" Whlbase
78=Open Body 103" Whlbase - Export
T=2WD
J,N=4WD
U=4WD (RHD)

BODY STYLES:

YJ=Wrangler (4X4) "S"
Weangler (4X4) SE
Wrangler (4X4) Sahara
Wrangler (4X4) Renegade
XJ=Cherokee SE
Cherokee Sport
Cherokee Country
ZJ=Grand Cherokee SE
Grand Cherokee Laredo
Grand Cherolee Limited
ZG=Grand Cherokee European
Y1=Wrangler
X1=Cherokee
Z1=Grand Cherokee
KDX=Vehicles

AR = Use as Required - = Non Illustrated Part P.A.R. = Paint as Required

CONTROLS, GEARSHIFT FIVE SPEED TRANSMISSION WRANGLER, YJ
Figure 21M-1210

21M-1210

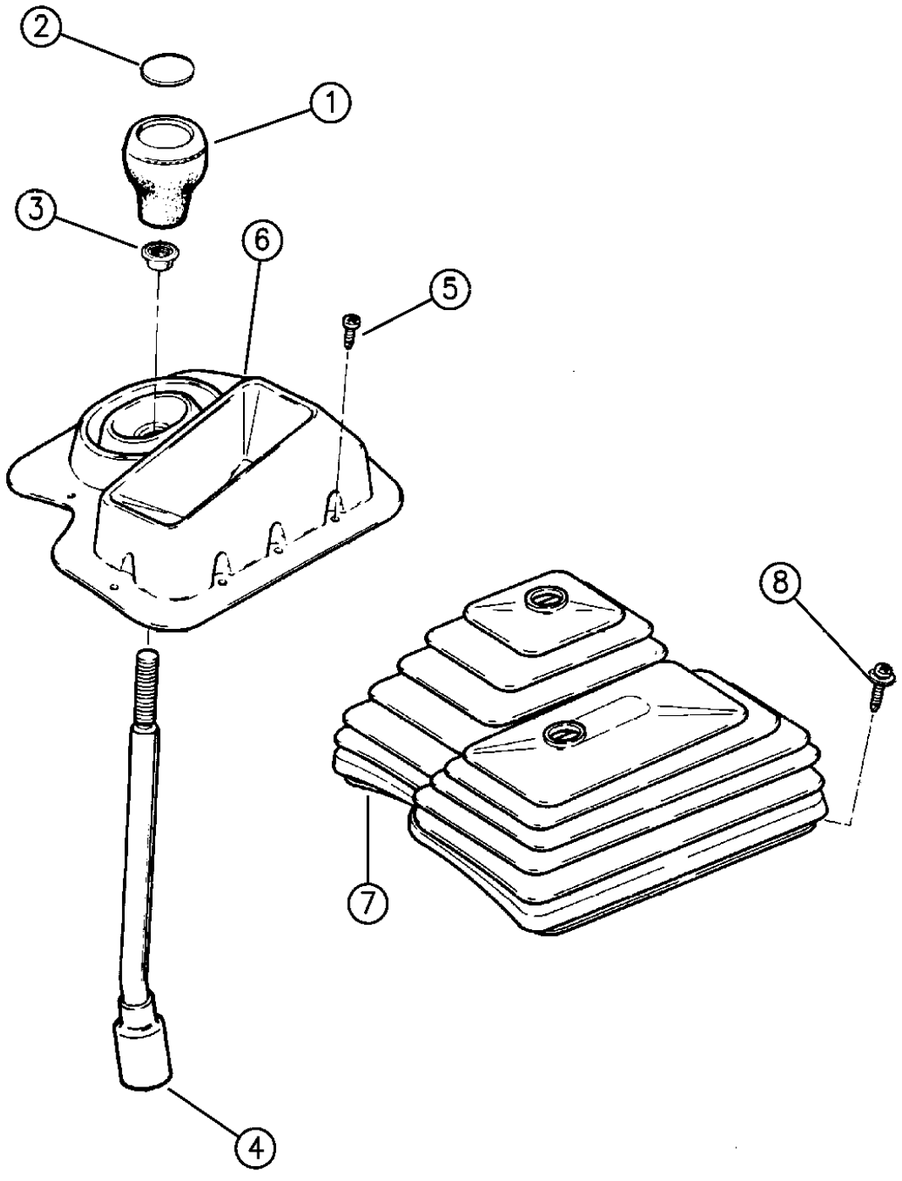

94J40 1210

ITEM	PART NUMBER	QTY	BODY	MODEL	DESCRIPTION
1	J324 1062	1			KNOB, Gearshift Lever
2	J324 1073	1			INSERT
3	J400 6495	1			NUT
4	5300 2006	1			LEVER, Manual Gearshift
5	J400 6444	3			SCREW, (.62" Lg)
6	5300 5554	1			BOOT, Inner
7	5300 4539	1			BOOT, Outer
8	J400 5631	AR			SCREW, Hex Flanged Head, (M10-16x1.00mm)

MODEL CODES:

72=2 DR Wagon
74=4 DR Wagon
77=Open Body 93" Whlbase
78=Open Body 103" Whlbase - Export
T=2WD
J,N=4WD
U=4WD (RHD)

BODY STYLES:

YJ=Wrangler (4X4) "S"
Weangler (4X4) SE
Wrangler (4X4) Sahara
Wrangler (4X4) Renegade

XJ=Cherokee SE
Cherokee Sport
Cherokee Country

ZJ=Grand Cherokee SE
Grand Cherokee Laredo
Grand Cherolee Limited
ZG=Grand Cherokee European

Y1=Wrangler
X1=Cherokee
Z1=Grand Cherokee
KDX=Vehicles

AR = Use as Required - = Non Illustrated Part P.A.R. = Paint as Required

« RETURN TO GROUP INDEX

CONTROLS, GEARSHIFT FIVE SPEED TRANSMISSION CHEROKEE
Figure 21M-1215

21M-1215

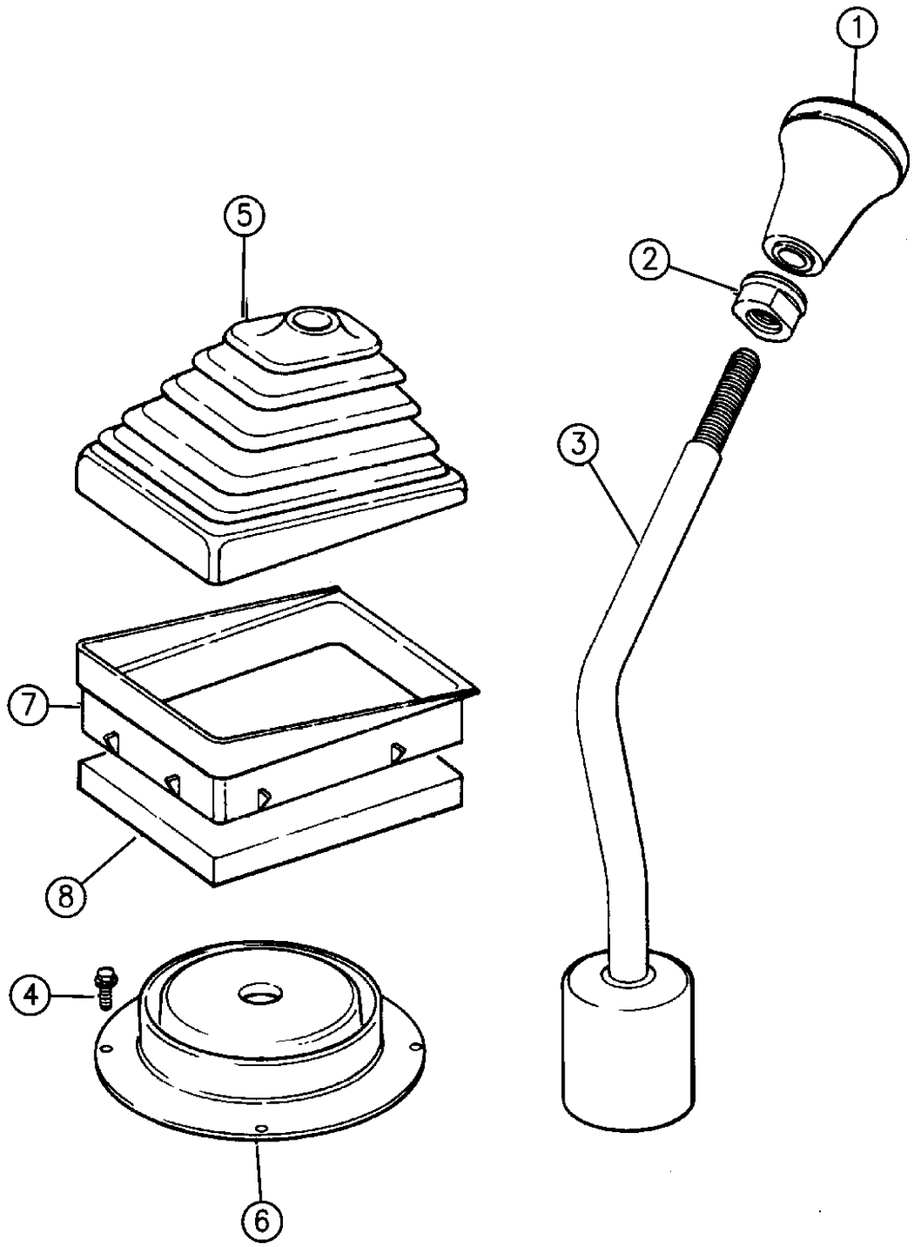

94J40 1215

ITEM	PART NUMBER	QTY	BODY	MODEL	DESCRIPTION
1	5300 0605	1			KNOB, Gear Shift
2	5300 0606	1			NUT, Shift Lever
3	5300 1480	1			LEVER ASSEMBLY, Manual Shift
	5207 7748	1			RHD
4	1150 2843	4			SCREW, (M8-18x.50mm)
5	5300 4433	1			BOOT, Outer
6					BOOT, Inner
	5300 1553	1			With Four Cylinder Engine, Gas or Diesel
	5207 7566	1			KDX
	5300 5384	1			With Six Cylinder Engine
	5207 7567	1			KDX
7	5300 0056	1			BEZEL, Shift
8	5300 5395	1			INSULATOR ***

MODEL CODES:

72=2 DR Wagon
74=4 DR Wagon
77=Open Body 93" Whlbase
78=Open Body 103" Whlbase - Export
T=2WD
J,N=4WD
U=4WD (RHD)

BODY STYLES:

YJ=Wrangler (4X4) "S"
Weangler (4X4) SE
Wrangler (4X4) Sahara
Wrangler (4X4) Renegade
XJ=Cherokee SE
Cherokee Sport
Cherokee Country
ZJ=Grand Cherokee SE
Grand Cherokee Laredo
Grand Cherolee Limited
ZG=Grand Cherokee European
Y1=Wrangler
X1=Cherokee
Z1=Grand Cherokee
KDX=Vehicles

AR = Use as Required - = Non Illustrated Part P.A.R. = Paint as Required

« RETURN TO GROUP INDEX

GEAR SHIFT CONTROLS - FLOOR SHIFT GRAND CHEROKEE
Figure 21M-1220

21M-1220A

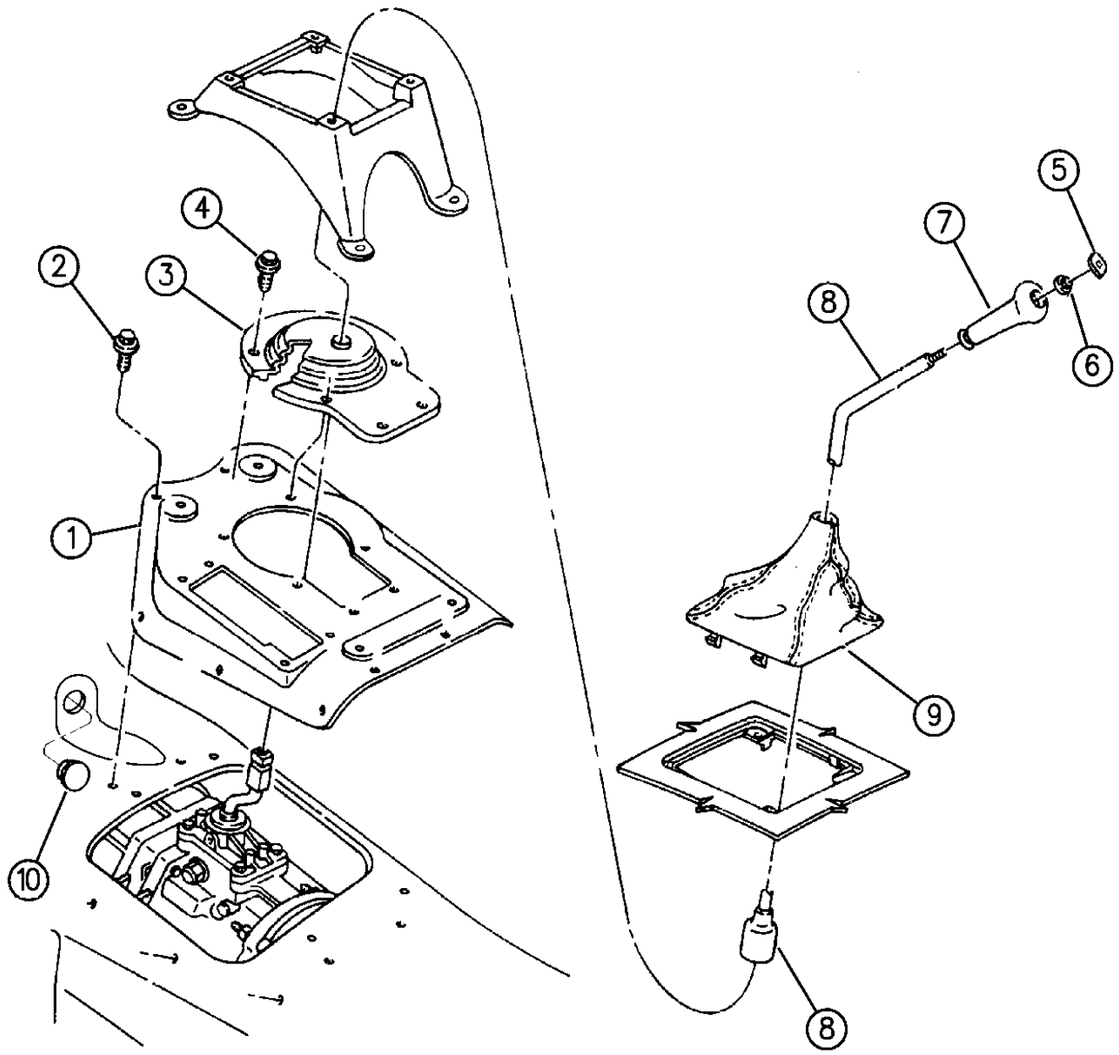

94J40 1220

ITEM	PART NUMBER	QTY	BODY	MODEL	DESCRIPTION
1					COVER, Trans.
	5523 4590	1			4x2
	5523 4591	1			4x4
2					SCREW (DNS)
3	5300 7069	1			BOOT, Manual Trans., Lower ***
4	1150 2843	6			SCREW
5	5207 7533	1			INSERT, Shift Pattern
6	6501 635	1			NUT, Shift Knob Attaching
7	5300 7073	1			KNOB, Gearshift Lever
8	5207 8411	1			LEVER, Straight Stub Shift
	4882 668	1			w/2.5 Diesel ***
9					BOOT, Shift Lever, Outer ***
	5300 7070	1			
	5700 8072	1	ZG		RHD
10	3420 1616	1			PLUG

MODEL CODES:

72=2 DR Wagon
74=4 DR Wagon
77=Open Body 93" Whlbase
78=Open Body 103" Whlbase - Export
T=2WD
J,N=4WD
U=4WD (RHD)

BODY STYLES:

YJ=Wrangler (4X4) "S"
Weangler (4X4) SE
Wrangler (4X4) Sahara
Wrangler (4X4) Renegade
XJ=Cherokee SE
Cherokee Sport
Cherokee Country
ZJ=Grand Cherokee SE
Grand Cherokee Laredo
Grand Cherolee Limited
ZG=Grand Cherokee European
Y1=Wrangler
X1=Cherokee
Z1=Grand Cherokee
KDX=Vehicles

AR = Use as Required - = Non Illustrated Part P.A.R. = Paint as Required

« RETURN TO GROUP INDEX

SAGIPARTS

GROUP-21R
TRANSFER CASE
(MODEL 231)

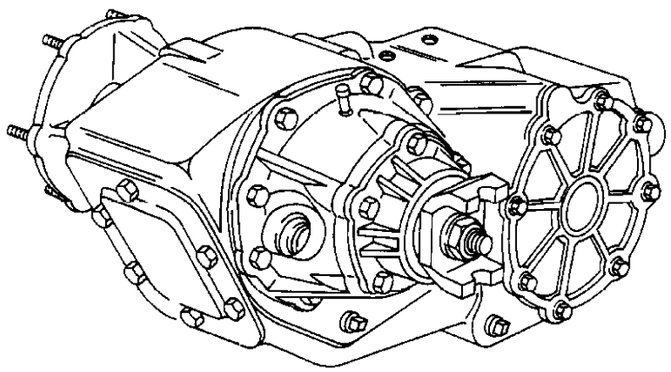

ILLUSTRATION TITLE **GROUP-FIG. NO.**

TRANSFER CASE ASSEMBLY

TRANSFER CASE, (DHN) MODEL NPG 231 . . . . . Fig. 21R-110

CASE AND RELATED PATS

CASE, EXTENSION AND MISCELLANEOUS PARTS, (DHN) WRANGLER, YJ, CHEROKEE, GRAND CHEROKEE . . . . . Fig. 21R-210

GEAR TRAIN

GEAR TRAIN,(DHN) WRANGLER, YJ, CHEROKEE, GRAND CHEROKEE . . . . . Fig. 21R-410

FORK AND RAILS

FORKS, RAILS, MISCELLANEOUS PARTS, SHIFT, (DHN) WRANGLER, YJ, CHEROKEE, GRAND CHEROKEE . . . . . Fig. 21R-910

GEAR SHIFT CONTROLS

CONTROLS, SHIFT WRANGLER, YJ . . . . . Fig. 21R-1210

FORKS, RAILS, MISCELLANEOUS PARTS, SHIFT, (DHN) WRANGLER, YJ, CHEROKEE, GRAND CHEROKEE . . . . . Fig. 21R-1220

CONROLS SHIFT, (DHN) GRAND CHEROKEE . . . . . Fig. 21R-1230

21M-100 TRANSFER CASE ASSY 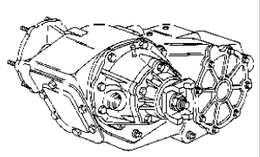	**21M-200** CASE & RELATED PARTS 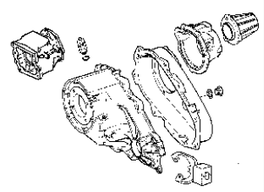	**21M-400** GEAR TRAIN 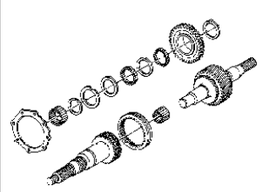	**21M-900** FORK & RAILS 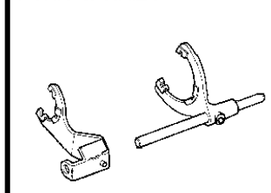
21M-1200 GEAR SHIHT CONTROLS	SPEEDO GEAR & PINION SEE GROUP-21-P PINIONS		

TRANSFER CASE, (DHN) MODEL NPG 231
Figure 21R-110

21R-110

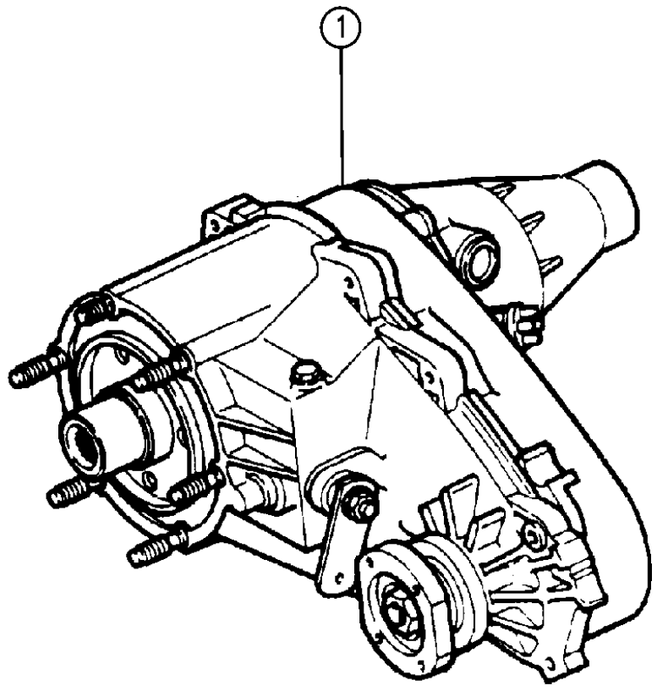

94J46 110

ITEM	PART NUMBER	QTY	BODY	MODEL	DESCRIPTION
1					TRANSFER CASE ASSEMBLY, MODEL NPG 231 ***
					2.5L Four Cylinder Engine, With Five Speed Transmission
	5209 7894	1	YJ		
	5209 8361	1	YJ		
	5209 7891	1	Y1		
	5209 8540	1	Y1		
					2.5L Four Cylinder Engine, With 30RH Automatic Transmission
	5300 8210	1	YJ		
					4.0L Six Cylinder Engine, With Five Speed Transmission
	5209 7695	1	YJ		
	5209 8362	1	YJ		
					2.5L Gas Engine, 4.0L Six Cylinder Engine w/All Automatic Transmissions.
	5209 7893	1	YJ		
	5209 8563	1	YJ		
					4.0 Six Cylinder Engine, w/Aisin Warner Automatic Transmission
	5209 7892	1	Y1		
	5209 8360	1	Y1		
					4.0 Six Cylinder Engine, w/Manual Transmission
	5209 7889	1	Y1		
	5209 8358	1	Y1		
					2.5L Four Cylinder Engine, With Five Speed Transmission
	5209 7888	1	XJ		
	5209 8486	1	XJ		
	5209 8471	1	XJ		
					2.1L Four Cylinder Diesel, With Five Speed Transmission 1994
	5209 7888	1	XJ		
	5209 8486	1	XJ		
					2.5L Turbo Diesel Engine, w/Aisin Seiki Transmission
	5209 8661	1	XJ,X1		1995
	5209 8480	1	XJ,X1		1996
					2.5L Four Cylinder Engine, With 30RH Automatic Transmission
	5209 8048	1	XJ		
	5209 8316	1	XJ		
	5209 8473	1	XJ		
					4.0L Six Cylinder Engine
	5209 7890	1	XJ,X1		
	5209 8487	1	XJ,X1		1994-5
	5209 8480	1	XJ,X1		
	5209 9212	1	XJ,X1		

MODEL CODES:

72=2 DR Wagon
74=4 DR Wagon
77=Open Body 93" Whlbase
78=Open Body 103" Whlbase - Export
T=2WD
J,N=4WD
U=4WD (RHD)

BODY STYLES:

YJ=Wrangler (4X4) "S"
Weangler (4X4) SE
Wrangler (4X4) Sahara
Wrangler (4X4) Renegade
XJ=Cherokee SE
Cherokee Sport
Cherokee Country
ZJ=Grand Cherokee SE
Grand Cherokee Laredo
Grand Cherolee Limited
ZG=Grand Cherokee European
Y1=Wrangler
X1=Cherokee
Z1=Grand Cherokee
KDX=Vehicles

AR = Use as Required - = Non Illustrated Part P.A.R. = Paint as Required

TRANSFER CASE, (DHN) MODEL NPG 231
Figure 21R-110

21R-110

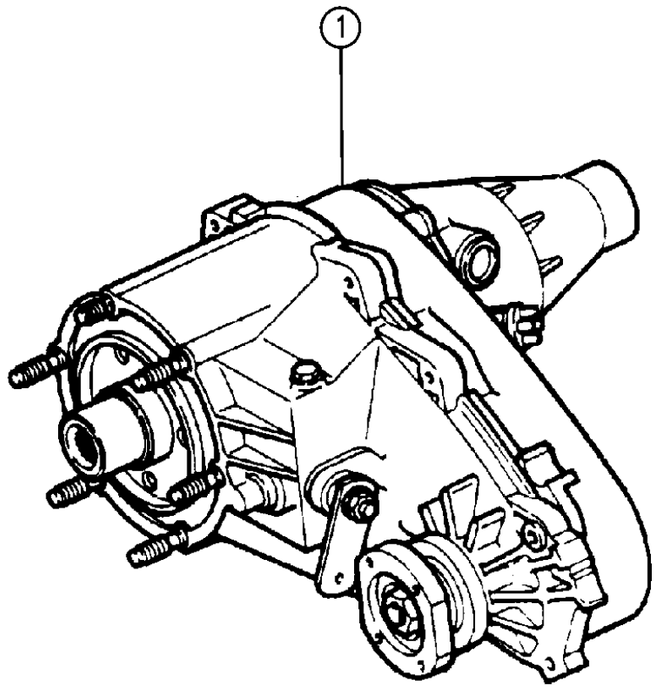

94J46 110

ITEM	PART NUMBER	QTY	BODY	MODEL	DESCRIPTION
					4.0L Six Cylinder Engine, w/Manaul Transmission, w/AW4 Transmission
	5209 7696	1	ZJ		
	5209 8318	1	ZJ		
					4.0L Six Cylinder Engine, With 42RE Automatic Transmission
	5209 7526	1	ZJ		
	5209 8319	1	ZJ		
					4.0L Six Cylinder Engine, 2.5L Turbo Diesel Engine
	5209 8469	1	ZG		
	5209 9120	1	ZG		

MODEL CODES:

72=2 DR Wagon
74=4 DR Wagon
77=Open Body 93" Whlbase
78=Open Body 103" Whlbase - Export
T=2WD
J,N=4WD
U=4WD (RHD)

BODY STYLES:

YJ=Wrangler (4X4) "S"
Weangler (4X4) SE
Wrangler (4X4) Sahara
Wrangler (4X4) Renegade
XJ=Cherokee SE
Cherokee Sport
Cherokee Country
ZJ=Grand Cherokee SE
Grand Cherokee Laredo
Grand Cherolee Limited
ZG=Grand Cherokee European
Y1=Wrangler
X1=Cherokee
Z1=Grand Cherokee
KDX=Vehicles

AR = Use as Required - = Non Illustrated Part P.A.R. = Paint as Required

CASE, EXTENSION AND MISCELLANEOUS PARTS, (DHN) WRANGLER, YJ, CHEROKEE, GRAND CHEROKEE
Figure 21R-210

21R-210C

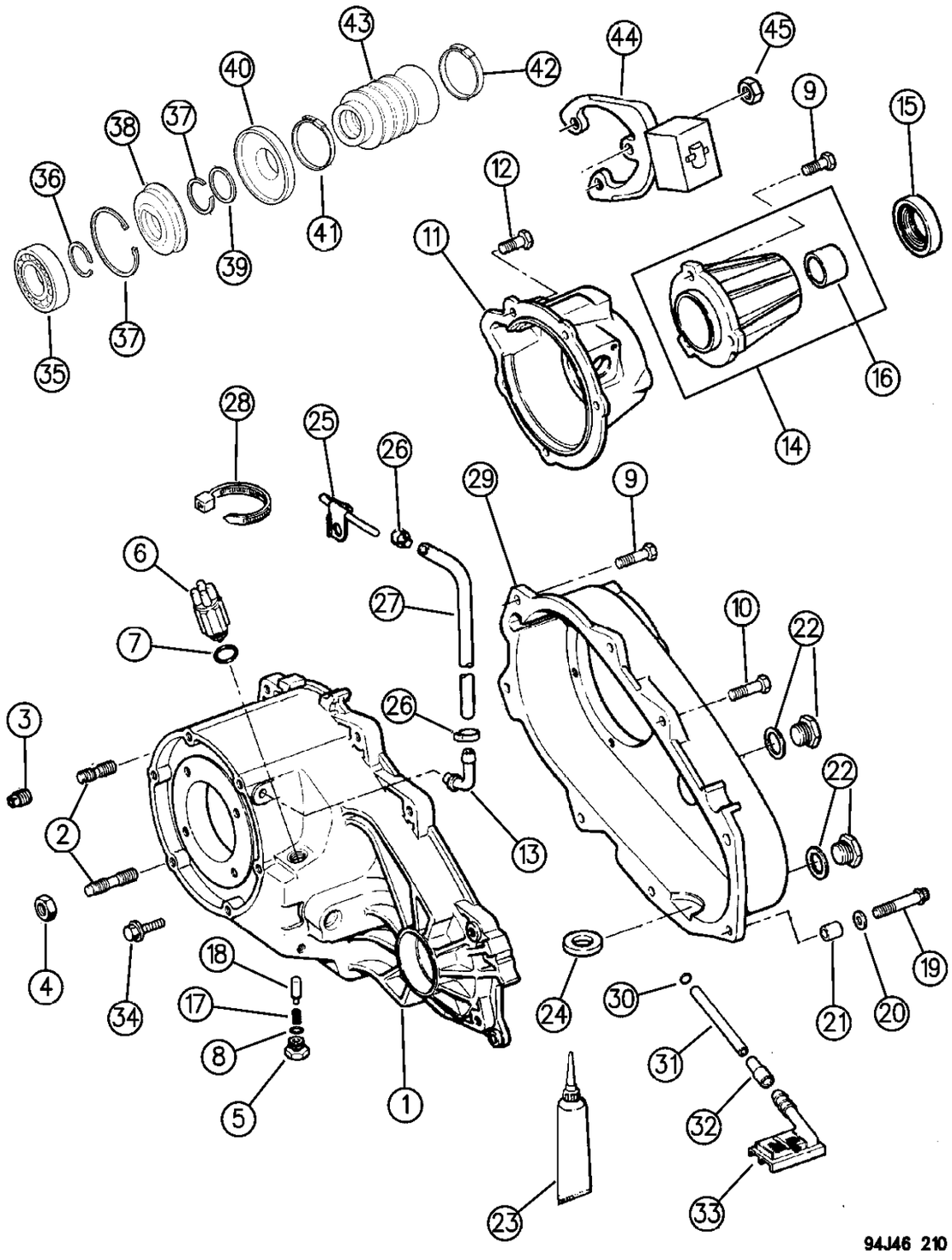

ITEM	PART NUMBER	QTY	BODY	MODEL	DESCRIPTION
1					CASE, Front ***
	5300 8214	1			w/52097888, 52097889, 52097890, 52097891, 52097892, 52098316, 52097696, 52098561, 52097894, 52097893, 52097895
	4796 949	1			w/52098358, 52098360, 52098486, 52098487, 52098540, 52098661, 52098361, 52098362, 52098563
	4796 949	1			w/52098048, 52097695, 52098318, 52098319, 52097696, 52097526, 52098366
	4798 111	1	XJ,ZG		w/52098471,52098473,52098480,52098469,52099120, 52099212
	4856 389	1			w/52098383
2					STUD, Case Front
	4505 365	AR			36mm
3	5300 0502	1			PLUG
4	J400 6681	AR			NUT, Transfer Case
5	5300 8216	1			SCREW
6					SWITCH, Vacuum
	5300 1101	1			w/Transfer Case 52097695, 52097893, 52097894,52097526, 52097696, 53008210, 52098361, 52098362, 52098563
	5300 1101	1			w/52097894, 52098561, 520987695, 52098362, 52098318, 52098319, 52098048, 52098316, 52097526
					ELECTRICAL ***
	J813 4473	1			w/Transfer Case 52097890, 52097891, 52097888, 52097889, 52097892, 52098048, 52098358, 52098360
	J813 4473	1			w/52098486,52098487,52098540,52098616,52098471, 52098473,5298480 ,52099212
	5600 6901	1			w/Transfer Case 52097696, 520987526, 52098469 ,52099120
7	4338 956	1			SEAL, O-Ring
8	4338 956	1			SEAL
9	J813 0984	8			BOLT, (M10-1.5x28mm)
	5210 617	5			w/52098471,52098473,52098480,52098469,52099120
10	J813 0979	1			BOLT, (M10-1.5x48mm)
11					RETAINER, Transfer Case Rear
	8350 3573	1	YJ,XJ		2.5L Four Cylinder Engine, w/30RH Automatic Transmission ***
	4741 243	1			
	4798 115	1			w/52098471,52098473,52098480,52098469,52099120, 52099212
12	J813 4472	5			BOLT, Transfer Case Rear
	6500 318	5			w/52098471,52098473,52098480,52098469,52099120
13	4338 957	1			VENT
	4796 910	1			w/52098471,52098473,52098480,52098469,52099120, 52099212

MODEL CODES:

72=2 DR Wagon	77=Open Body 93" Whlbase	T=2WD	U=4WD (RHD)
74=4 DR Wagon	78=Open Body 103" Whlbase - Export	J,N=4WD	

BODY STYLES:

YJ=Wrangler (4X4) "S"	XJ=Cherokee SE	ZJ=Grand Cherokee SE	Y1=Wrangler
Weangler (4X4) SE	Cherokee Sport	Grand Cherokee Laredo	X1=Cherokee
Wrangler (4X4) Sahara	Cherokee Country	Grand Cherolee Limited	Z1=Grand Cherokee
Wrangler (4X4) Renegade		ZG=Grand Cherokee European	KDX=Vehicles

AR = Use as Required - = Non Illustrated Part P.A.R. = Paint as Required

CASE, EXTENSION AND MISCELLANEOUS PARTS, (DHN) WRANGLER, YJ, CHEROKEE, GRAND CHEROKEE
Figure 21R-210

21R-210C

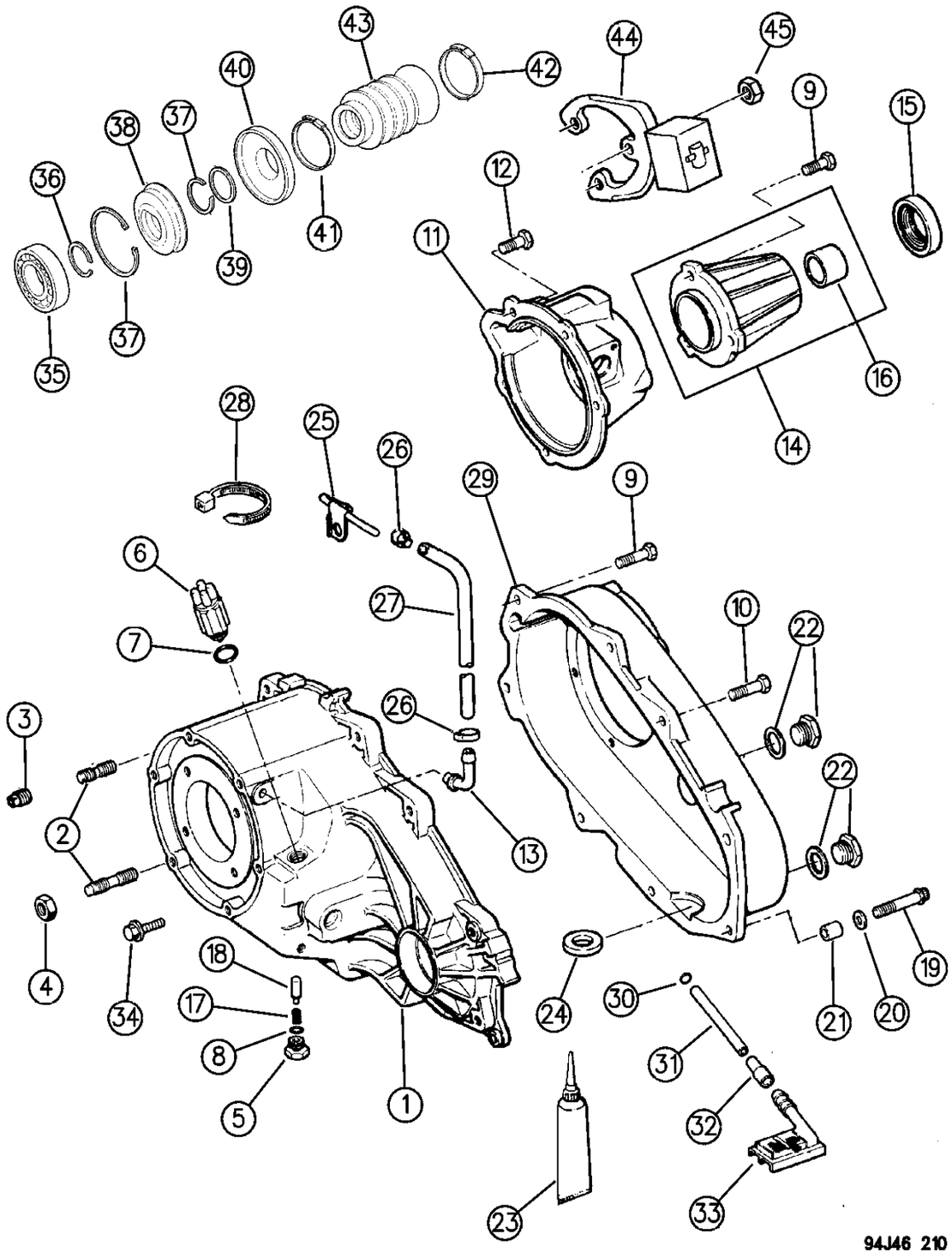

ITEM	PART NUMBER	QTY	BODY	MODEL	DESCRIPTION
14	8350 3156	1			EXTENSION, Case Rear Housing
15	4638 904	1			SEAL, Transfer Case Rear
	4798 117	1			w/52098471,52098473,52098480,52099212
16	J813 4490	1			BUSHING, Transfer Case Extension Housing
	4338 945	1	ZJ		
17	4638 497	1			SPRING
	5300 8218	1	YJ		w/Transfer Case 53008210
18	5300 8217	1			PLUNGER
19	1150 0831	2			BOLT, (M10-1.5x35mm)
	4210 614	2			w/52098471,52098473,52098480,52098469,52099120
20	J400 1104	2			WASHER
	4210 983	2			w/52098471,52098473,52098480,52098469,52099120
21	J813 0872	2			DOWEL ***
	4116 310	2			w/52098471,52098473,52098480,52098469,52099120
22	4210 616	2			PLUG, Transfer Case Rear Half
	4856 641	2			w/52099120,52099212
23	4318 025	AR			SEALER, Gasket-in-a-Tube ***
24	3681 601	1			MAGNET ***
25					TUBE & CLIP ASSEMBLY, Case Vent ***
	J535 2955	1	YJ		
	5300 0805	1	XJ		
26	3300 0786	2			CLAMP
27	4443 176	AR			HOSE, (25' Roll)
28	6015 756	AR			STRAP
29					CASE, Rear ***
	4741 577	1			w/52097888,52097889,52097890,52097891,52098792
	4796 902	1	XJ,ZG		52098471,52098473,52098480,52098469,52099120
	4796 902	1			w/52098358, 52098360, 52098486, 52098487, 52098661, 52098048, 52098316
	4796 902	1			w/52098361, 52098362, 52098563, 52097696, 52097526, 52098318, 52098319, 52097893, 52097894, 52097695
	4886 222AA	1			w/52099212
30	4338 942	1			SEAL, Oil
31	4338 941	1			TUBE, Oil
32	4443 175	AR			HOSE, (25' Roll)
33	4338 943	1			SCREEN
34	J400 6995	1			BOLT, (3/8-16x1.25)
35					BEARING, Rear Output
	4338 892	1			w/52098471,52098473,52098480,52098469,52097695, 52097890,52099212
36					RING, Rear Bearing O.D. Retaining

MODEL CODES:

72=2 DR Wagon
74=4 DR Wagon
77=Open Body 93" Whlbase
78=Open Body 103" Whlbase - Export
T=2WD
J,N=4WD
U=4WD (RHD)

BODY STYLES:

YJ=Wrangler (4X4) "S"
Weangler (4X4) SE
Wrangler (4X4) Sahara
Wrangler (4X4) Renegade
XJ=Cherokee SE
Cherokee Sport
Cherokee Country
ZJ=Grand Cherokee SE
Grand Cherokee Laredo
Grand Cherolee Limited
ZG=Grand Cherokee European
Y1=Wrangler
X1=Cherokee
Z1=Grand Cherokee
KDX=Vehicles

AR = Use as Required - = Non Illustrated Part P.A.R. = Paint as Required

CASE, EXTENSION AND MISCELLANEOUS PARTS, (DHN) WRANGLER, YJ, CHEROKEE, GRAND CHEROKEE
Figure 21R-210

21R-210C

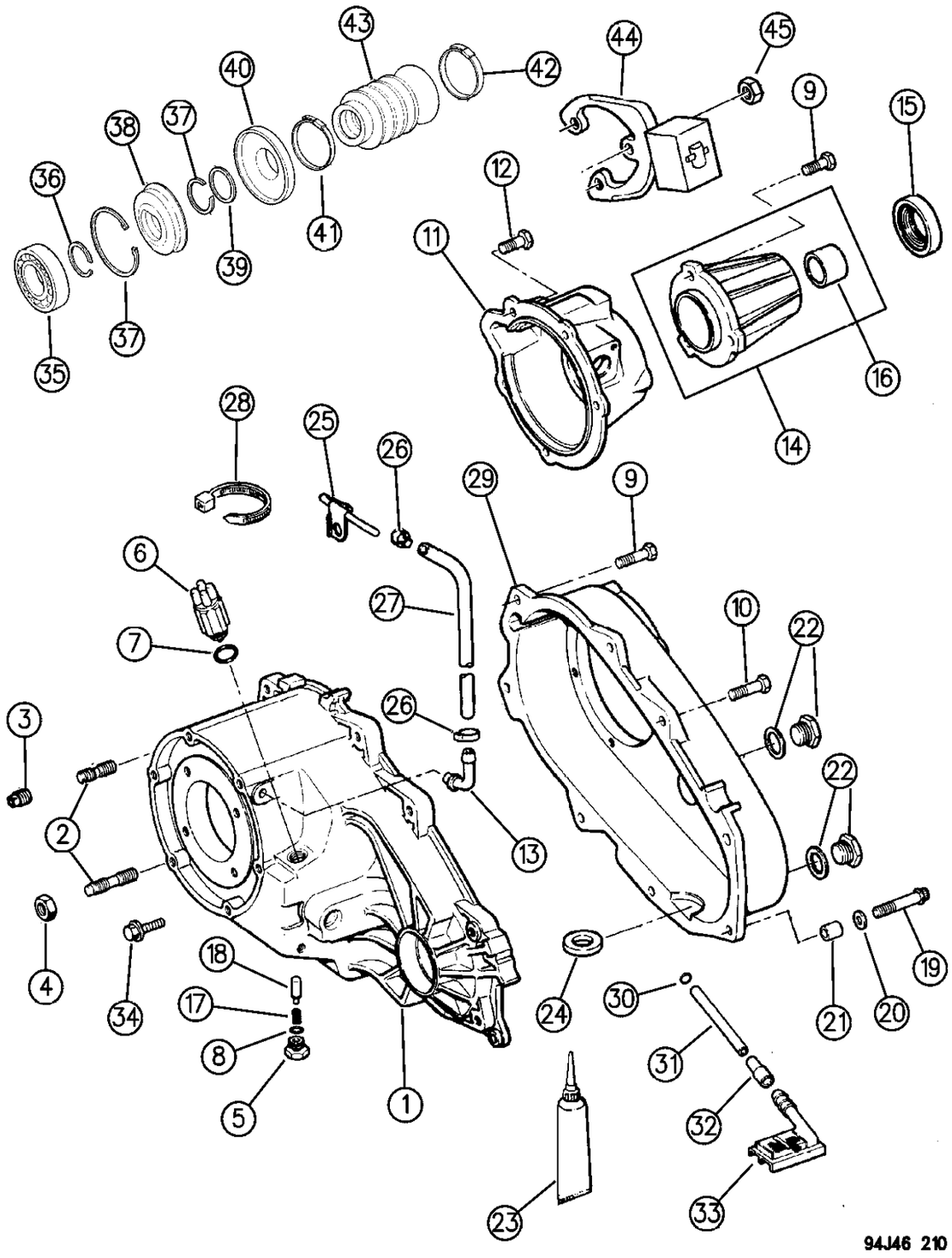

ITEM	PART NUMBER	QTY	BODY	MODEL	DESCRIPTION
	4798 116	1			w/52098471,52098473,52098480,52098469,52099120, 52099212
37					RING, Rear Bearing I.D. Retaining
	J813 4488	2			w/52098471,52098473,52098480,52098469,52099120, 52099212
38					SEAL, Oil Rear OutPut
	4798 117	1			w/52098471,52098473,52098480,52098469 ,52099120, 52099212
39					WASHER, Slinger Locating
	4798 118	1			w/52098471,52098473,52098480,5298469,52099120,52099212
40					SLINGER ***
	4798 119	1			w/52098471,52098473,52098480,52098469,52099120, 52099212
41					CLAMP(44.0) ***
	4798 121	1			w/52098471,52098473,52098480,52098469,52099120, 52099212
42					CLAMP (48.5)
	4798 122	1			w/52098471,52098473,52098480,52098469,52099120, 52099212
43					BOOT ***
	4798 123	1			w/52098471,52098473,52098480,52098469,52099120, 52099212
44	5209 8509	1	XJ, X1		DAMPER, w/Diesel Engine ***
45	6502 337	3			NUT, M10x1.50

MODEL CODES:

72=2 DR Wagon
74=4 DR Wagon
77=Open Body 93" Whlbase
78=Open Body 103" Whlbase - Export
T=2WD
J,N=4WD
U=4WD (RHD)

BODY STYLES:

YJ=Wrangler (4X4) "S"
Weangler (4X4) SE
Wrangler (4X4) Sahara
Wrangler (4X4) Renegade
XJ=Cherokee SE
Cherokee Sport
Cherokee Country
ZJ=Grand Cherokee SE
Grand Cherokee Laredo
Grand Cherolee Limited
ZG=Grand Cherokee European
Y1=Wrangler
X1=Cherokee
Z1=Grand Cherokee
KDX=Vehicles

AR = Use as Required - = Non Illustrated Part P.A.R. = Paint as Required

GEAR TRAIN,(DHN) WRANGLER, YJ, CHEROKEE, GRAND CHEROKEE
Figure 21R-410

21R-410B

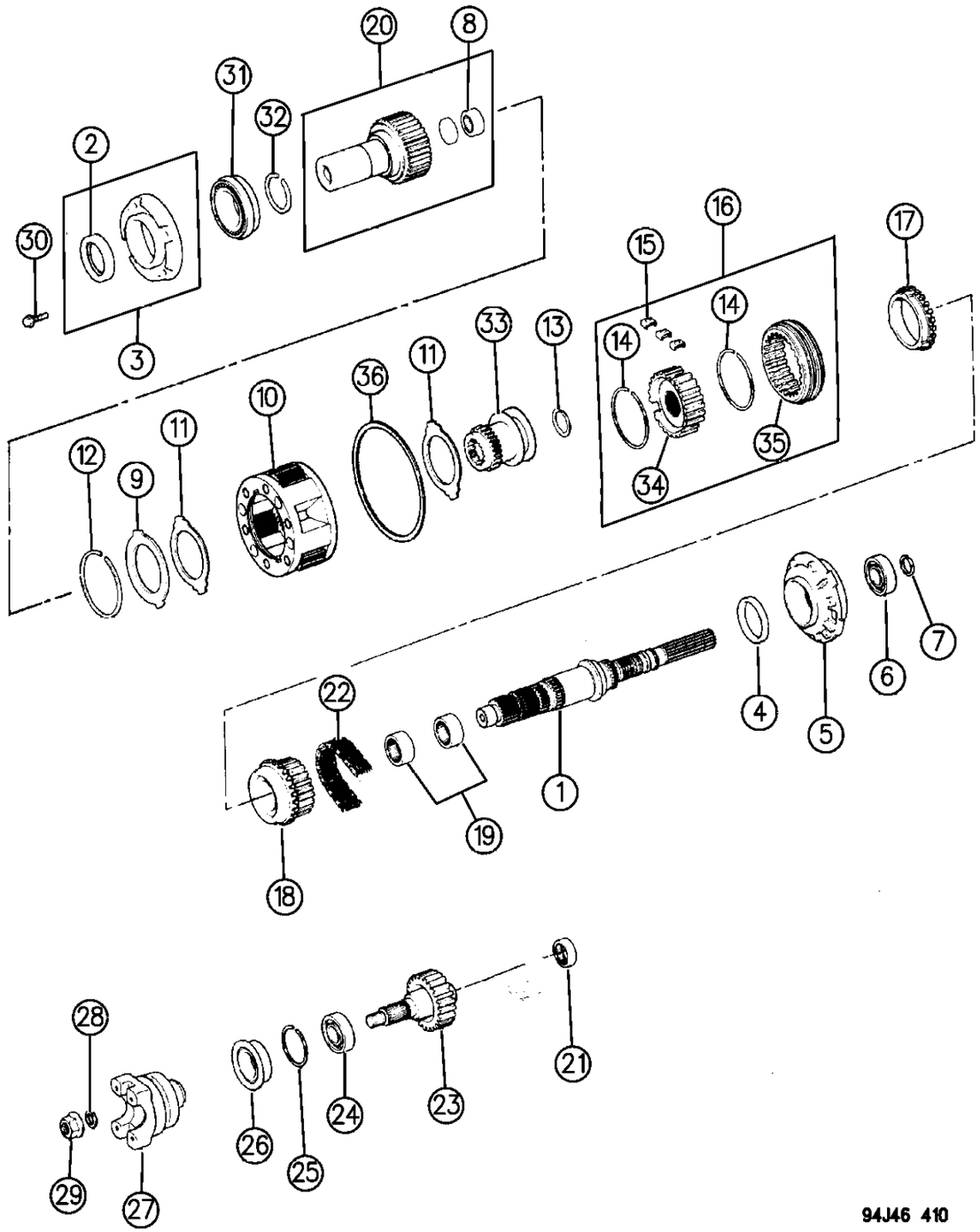

ITEM	PART NUMBER	QTY	BODY	MODEL	DESCRIPTION
1					SHAFT, Main Drive
	8350 3141	1			w/52097888, 52097889, 52097890, 52097891, 520987892, 52098561, 52098562
	8350 3141	1			w/52097695, 52097893, 52098794, 52098048, 52098696, 52097526
	4796 907	1			w/52098358, 52098360, 52098486, 52098487, 52098540, 52098661
	4796 907	1			w/52097893, 52098316, 52097894, 52098563, 52098361, 52098362, 52098318, 52098319
	4798 114	1	XJ,ZG		w/52098471,52098473,52098480,52098469,52099120, 52099212
2	4167 929	1			SEAL, Oil
3	4338 972	1			RETAINER
4	4210 603	1			SEAL, Oil
5	4338 936	1			HOUSING, Oil Pump
6	4338 892	1			BEARING
7	J813 4488	1			RING
8	4338 913	1			BEARING, Input Pilot
	4746 155	1	XJ,ZG		w/52098471,52098473,52098480,52098469,52099120, 52098361, 52098487
	8350 3507	1			w/52097890, 52098319, 52098487
9	4338 909	1			PLATE, Strut Retaining
10					GEAR, Planetary Transfer Case ***
	5300 6087	1			w/52097888, 52097889, 52097890, 52097891, 52097892, 52097696, 52097526, 52098561, 55098563, 52098562, 52097893, 52097894, 52097695
	4796 903	1			w/52098358, 52098360, 52098486, 52098487, 52098540, 52098661, 52098048, 52097696, 52097893, 52097894
	4796 903	1			w/52098318, 52098319, 52098361, 52098362, 52098563, 52098316, 52098469,52098471,52098473,52098480, 52098469,52099120, 52099212
11	4338 908	2			RING, Thrust
12	4338 910	1			RING, Snap, Planetary Carrier
13	4338 933	1			RING, Retaining
14	4329 524	2			SPRING
15	8350 0990	3			STRUT, Synchronizer
16					SYNCHRONIZER ASSEMBLY, Mode Shift ***
	4505 361	1			w/52098563, 52098361, 52098362, 52097893, 52097894, 52097695, 53008210, If your Transmission is not Listed , Order Component Parts.
	4796 967	1			w/52097893, 52097894, 52097695, 52098361, 52098362, 52098563

MODEL CODES:

72=2 DR Wagon
74=4 DR Wagon
77=Open Body 93" Whlbase
78=Open Body 103" Whlbase - Export
T=2WD
J,N=4WD
U=4WD (RHD)

BODY STYLES:

YJ=Wrangler (4X4) "S"
Weangler (4X4) SE
Wrangler (4X4) Sahara
Wrangler (4X4) Renegade
XJ=Cherokee SE
Cherokee Sport
Cherokee Country
ZJ=Grand Cherokee SE
Grand Cherokee Laredo
Grand Cherolee Limited
ZG=Grand Cherokee European
Y1=Wrangler
X1=Cherokee
Z1=Grand Cherokee
KDX=Vehicles

AR = Use as Required - = Non Illustrated Part P.A.R. = Paint as Required

GEAR TRAIN,(DHN) WRANGLER, YJ, CHEROKEE, GRAND CHEROKEE
Figure 21R-410

21R-410B

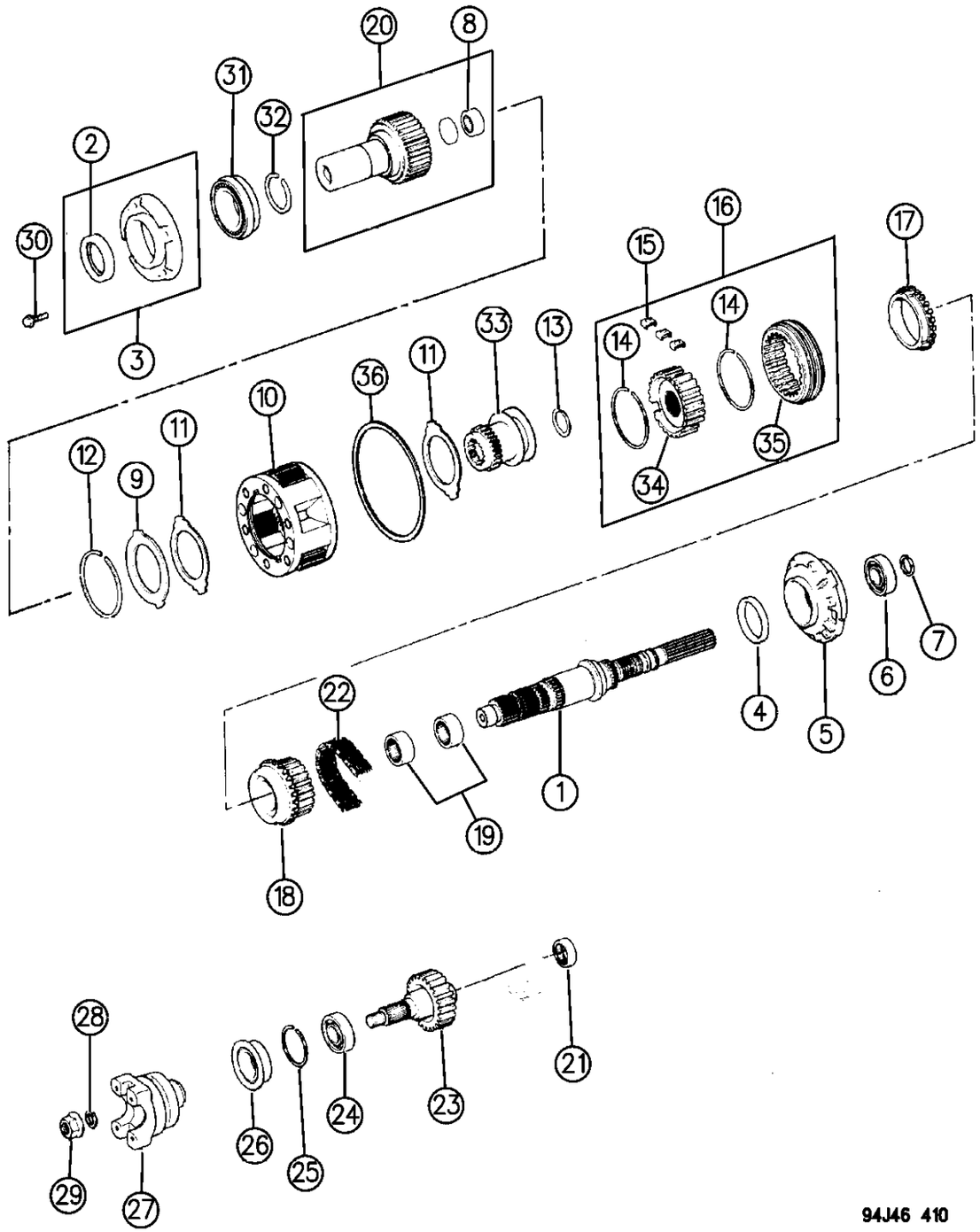

ITEM	PART NUMBER	QTY	BODY	MODEL	DESCRIPTION
17					RING, Stop
	4329 526	1			w/52097894, 53008210, 52097695, 52097893,52098361, 52098362 ,52098563
18					SPROCKET, Drive ***
	4741 238	1			w/52097888, 52097890, 52097526, 52097696
	4796 908	1			w/52098358, 52098360, 52098486, 52098487, 52098540, 52098661, 52098048, 52097696, 52098318, 52098316, 52098741,52098743,52098480,52098318,52098319
	4796 908	1			w/52098469,52099120,52099212
	4796 966	1			w/52097893, 52097894, 52097695, 520978361, 52098362, 52098563
19	4269 185	2			BEARINGS, Sprocket 231 Transfer Case ***
20					GEAR, Input ***
	5300 6083	1			27 Teeth, w/52097888, 52097894, 52097891, 52098561, 52098361
	5300 6084	1			27 Teeth, w/52097695,52297696,52097890
	5300 6085	1			23 Teeth, w/52097893,52098316
	8350 6065	1			23 Teeth, w/52098362, 52097890, 52097889, 52097695, 52097892, 53008210, 52098048
	4761 068	1			23 Teeth, w/52097526
	4796 904	1			w/52098358, 52098487, 52098661, 52098318, 52098362
	4796 905	1			w/52098319
	4796 956	1			w/52098486, 52098540, 52098361,52098471
	4796 965	1			w/52098360, 52098316, 52098563, 52098473
	4798 113	1	XJ,ZG		w/52098480,52098469,52099120, 52099212
21	4269 189	1			BEARING
22	4338 935	1			CHAIN, Drive Transfer Case
23	4338 934	1			SHAFT, Output, 231 Transfer Case
24	4338 892	1			BEARING, Output Shaft Front
25	4338 894	1			RING, Retaining
26	4338 893	1			SEAL, Oil, Front Output Shaft Yoke
	4798 112	1			w/52098471,52098473,52098480,52098469,52099120, 52099212
27					FLANGE, Yoke, Front Output Shaft, With Slinger
	8350 2829	1			w/52097889, 52097892, 52097893, 52097695, 53008210, 52097891, 52097894, 52098540, 52098358, 52098360, 55098361, 52098362, 52098563
	4446 494	1			w/52097696, 52097526, 52097888, 52097890, 55098486, 52098487, 52098661, 52098316, 52098318, 52098319
	4798 120	1	XJ,ZG		w/52098741,52098743,52098480,52098469,52099120, 52099212
28	4446 487	1			WASHER, Yoke

MODEL CODES:

72=2 DR Wagon
74=4 DR Wagon
77=Open Body 93" Whlbase
78=Open Body 103" Whlbase - Export
T=2WD
J,N=4WD
U=4WD (RHD)

BODY STYLES:

YJ=Wrangler (4X4) "S"
Weangler (4X4) SE
Wrangler (4X4) Sahara
Wrangler (4X4) Renegade
XJ=Cherokee SE
Cherokee Sport
Cherokee Country
ZJ=Grand Cherokee SE
Grand Cherokee Laredo
Grand Cherolee Limited
ZG=Grand Cherokee European
Y1=Wrangler
X1=Cherokee
Z1=Grand Cherokee
KDX=Vehicles

AR = Use as Required - = Non Illustrated Part P.A.R. = Paint as Required

GEAR TRAIN,(DHN) WRANGLER, YJ, CHEROKEE, GRAND CHEROKEE
Figure 21R-410

21R-410B

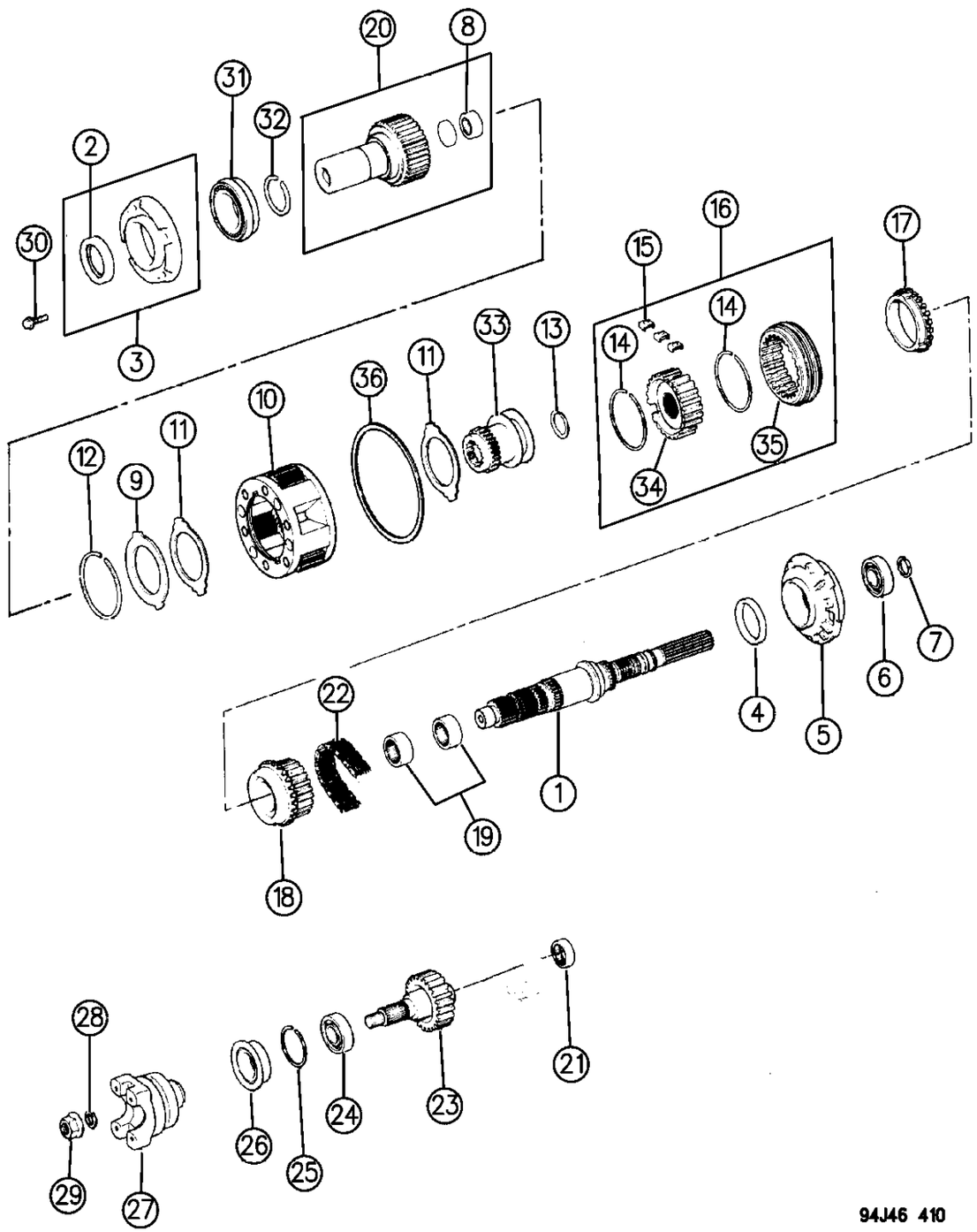

ITEM	PART NUMBER	QTY	BODY	MODEL	DESCRIPTION
29	4446 488	1			NUT, Front Output Shaft Yoke
30	6500 318	5			BOLT, Front Bearing Retainer
31	4746 155	1			BEARING, Input Ball
	4338 891	1			.935 Thick
32	3821 558	1			RING, Snap Bearing Retaining
33					HUB, Range Shift ***
	5300 6089	1			w/52097893, 52097894, 52097695, 52097890
	4796 906	1			w/52098358, 52098360, 52098486, 52098487, 52098540, 52098661, 52098316, 52098361, 52098362, 52098563, 52098318, 52098319, 52098696, 52097526
	4797 013	1			w/52098471,52098473,52098480,52098469,52099120, 52099212
34	4741 240	1			HUB, Synchronizer w/52097888, 52097890, 52097526, 52097696, 52098661, 52098316, 52098318, 52098319,52098471, 52098473, 52098480,52098469,52098487 ***
	4741 240	1			w/52099120,52099212
35					SLEEVE
	4338 932	1			w/52097888, 52097890, 52097526, 52097696, 52097893, 52097894, 52097695
	4796 909	1			w/52098358, 52098360, 52098486, 52098487, 52098540, 52098661, 52098361, 52098362
	4796 909	1			w/52098563,52098318,52098319,52098316,52098471, 52098473,52098480,52098469,52099120,52099212
36	4219 065	1			RING, Annulus

MODEL CODES:

72=2 DR Wagon
74=4 DR Wagon
77=Open Body 93" Whlbase
78=Open Body 103" Whlbase - Export
T=2WD
J,N=4WD
U=4WD (RHD)

BODY STYLES:

YJ=Wrangler (4X4) "S"
Weangler (4X4) SE
Wrangler (4X4) Sahara
Wrangler (4X4) Renegade

XJ=Cherokee SE
Cherokee Sport
Cherokee Country

ZJ=Grand Cherokee SE
Grand Cherokee Laredo
Grand Cherolee Limited
ZG=Grand Cherokee European

Y1=Wrangler
X1=Cherokee
Z1=Grand Cherokee
KDX=Vehicles

AR = Use as Required - = Non Illustrated Part P.A.R. = Paint as Required

FORKS, RAILS, MISCELLANEOUS PARTS, SHIFT, (DHN) WRANGLER, YJ, CHEROKEE, GRAND CHEROKEE
Figure 21R-910

21R-910A

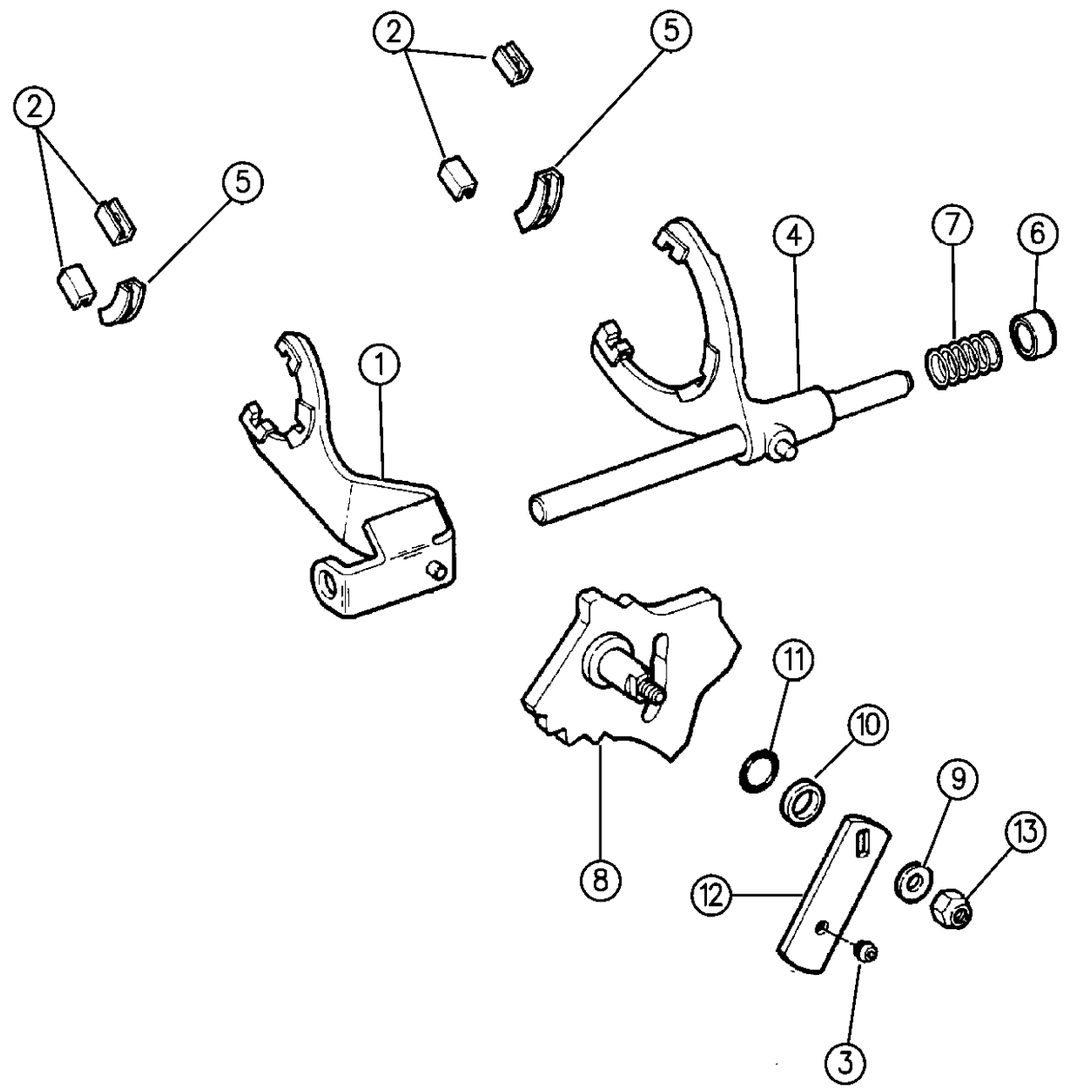

ITEM	PART NUMBER	QTY	BODY	MODEL	DESCRIPTION
1					FORK, Range Shift ***
	4638 913	1			
2	4167 969	2			PAD, Shift Fork
3	5300 4810	1			GROMMET
4					FORK, Mode Shift Transfer Case
	4741 237	1			w/52097888, 52097890, 52097526, 52097696, 52098358, 52098360, 52098487, 52098540, 52098661, 52097696, 52098526, 52098316
	4741 237	1			w/52098318,52098319,52098471,52098473,52098480, 52098469,52099120, 52099212
	4761 227	1			w/52097894, 52097695, 52097893, 52098361, 52098362, 52098563
	4338 920	1			w/Transfer Case 53008210
5	4219 073	1			PAD, Center
6	8350 3139	1			BUSHING, Rail Mode Shift
	4338 945	1	ZJ		
7	4338 925	1			SPRING, Mode Shifting Rail
8					SECTOR, Transfer Case Shifting
	4638 844	1			w/Transfer Case 52097695, 52097893, 52097894, 53008210, 52098361,52098362,52098563
	4638 844	1			w/Transfer Case 53008208, 53008209, 53008210, 53008214
	4638 845	1			w/52097888,52097889,52097890,52098316
	4638 845	1			w/Transfer Case 52097891, 52097892, 52098048
	4638 845	1			w/52098358,52098360,52098486,52098487,52098540, 52098661,52098471,52098473,52098480,52098469, 52099120,52099212
	4638 846	1			w/52097526,52097696,52098318,52098319
9	0120 394	1			SPACER, Shift Lever
	2436 163	1			w/52098471,52098473,52098480
10	4167 964	1			SEAL, Transfer Case Sector
11	4167 963	1			O-RING, Sector Seal
12					LEVER, Transfer Case Shift
	5300 4409	1			w/52097892, 52097893, 53008210,52098360,52098563
	5300 4420	1			w/52097695,52097889,52098358,52098362
	5300 4421	1			w/52097891,52097894,52098540,52098361
	5300 4226	1			w/52097526, 52097696, 52097888, 52097890, 52098048, 52098486, 52098487, 52098661, 52098316, 52098318, 52098319, 52098471, 52098473, 52098480, 52098469
	5300 4226	1			w/52099120,52099212
13	0152 345	1			NUT, Shift Lever

MODEL CODES:

72=2 DR Wagon
74=4 DR Wagon
77=Open Body 93" Whlbase
78=Open Body 103" Whlbase - Export
T=2WD
J,N=4WD
U=4WD (RHD)

BODY STYLES:

YJ=Wrangler (4X4) "S"
Weangler (4X4) SE
Wrangler (4X4) Sahara
Wrangler (4X4) Renegade
XJ=Cherokee SE
Cherokee Sport
Cherokee Country
ZJ=Grand Cherokee SE
Grand Cherokee Laredo
Grand Cherolee Limited
ZG=Grand Cherokee European
Y1=Wrangler
X1=Cherokee
Z1=Grand Cherokee
KDX=Vehicles

AR = Use as Required - = Non Illustrated Part P.A.R. = Paint as Required

« RETURN TO GROUP INDEX

CONTROLS, SHIFT WRANGLER, YJ
Figure 21R-1210

21R-1210

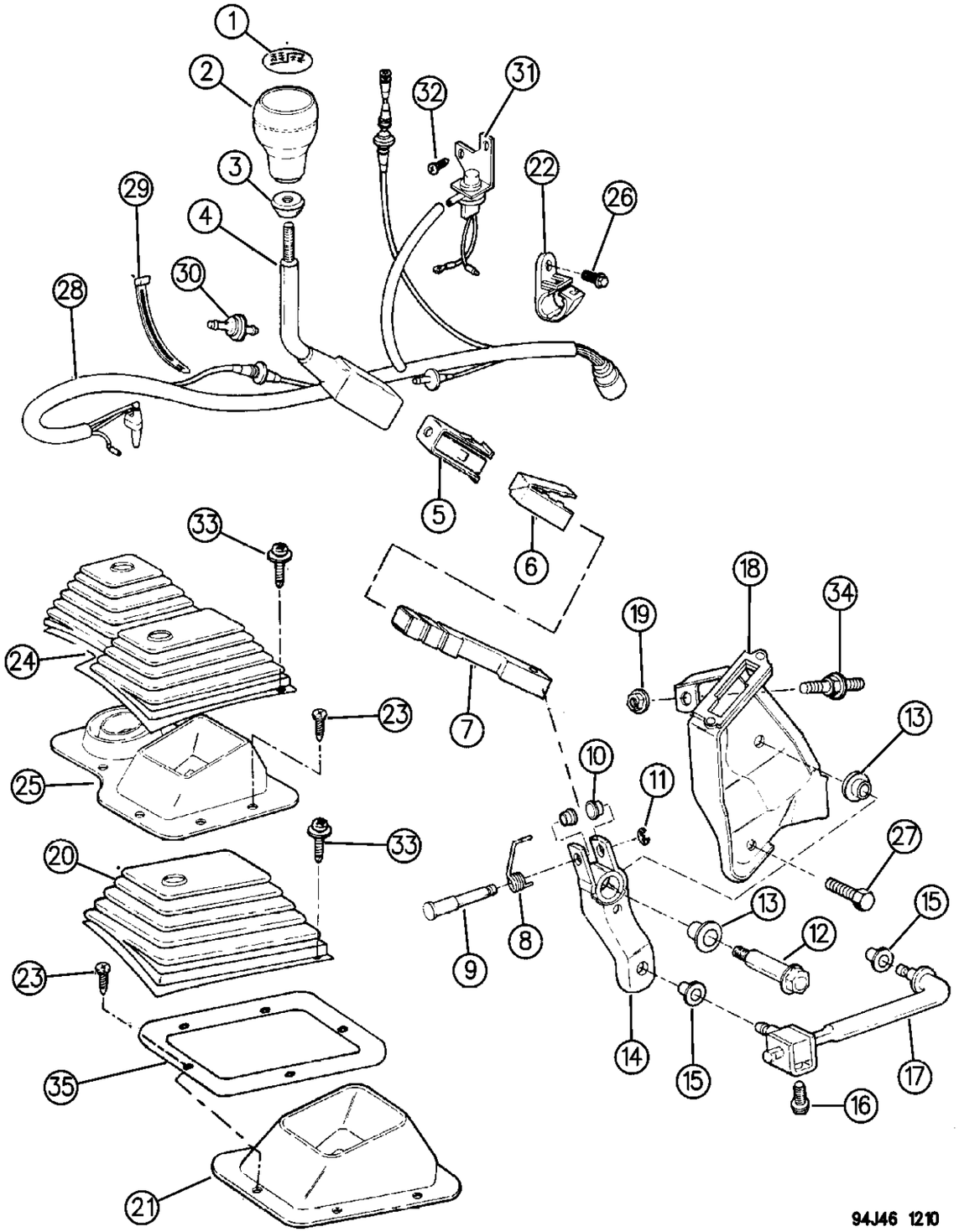

ITEM	PART NUMBER	QTY	BODY	MODEL	DESCRIPTION
1	5300 4376	1			INSERT, Shift Lever
2	J324 1062	1			KNOB, Shift
3	J400 6495	1			NUT
4	5300 3031	1			LEVER, Transfer Case Shift
	5200 8889	1	Y1		RHD
5	J324 1239	1			CLIP
6	J324 1481	1			ISOLATOR, Shift Lever ***
7	5300 3029	1			LEVER
8	5300 3030	1			SPRING
9	5300 4157	1			PIN, Transfer Case Shift Pivot Upper
10	5300 3033	2			BUSHING, Lever
11	1150 5398	1			CLIP
12	5300 3038	1			BOLT, Lever Pivot
13	5300 3035	2			BUSHING
14	5300 2028	1			LEVER
15	3575 333	2			GROMMET
16	J400 6036	1			BOLT
17					ROD, Shift
	5300 4338	1			2.5L Four Cylinder Engine, With Manual Transmission
	5300 4405	1			4.0L Six Cylinder Engine, With Manual Transmission
	5300 4407	1			2.5L&4.0L Engine, w/Automatic Transmission
18					BRACKET & BRACE ASSEMBLY, Transfer Case Shift Lever Mounting. ***
	5300 4278	1			2.5L Four Cylinder Engine
	5300 5371	1			4.0L Six Cylinder Engine, With Manual Transmission
	5300 4280	1			2.5L&4.0L Engine, w/Automatic Transmiss ion
19	J400 6681	2			NUT
20	5300 4511	1			BOOT, Outer, With Automatic Transmission
21	5300 5553	1			BOOT, Inner, With Automatic Transmission
22	J545 9095	1			CLIP
23	J400 6444	AR			SCREW, (.62")
24	5300 4539	1			BOOT ASSEMBLY, Outer, With Manual Transmission
25	5300 5554	1			BOOT, Inner With Manual Transmission
26	J812 0054	1			SCREW
27	1150 2693	1			BOLT
28	5300 7920	1			HARNESS, Vacuum ***
29	6015 756	1			STRAP
30	J536 4511	1			VALVE, Vacuum
31	5300 1102	1			SWITCH ASSEMBLY, 4WD Indicator Lamp ***
32	J400 6651	2			SCREW
33	J400 6633	AR			SCREW, (10-16x1)
34	6033 157	2			STUD

MODEL CODES:

72=2 DR Wagon
74=4 DR Wagon
77=Open Body 93" Whlbase
78=Open Body 103" Whlbase - Export
T=2WD
J,N=4WD
U=4WD (RHD)

BODY STYLES:

YJ=Wrangler (4X4) "S"
Weangler (4X4) SE
Wrangler (4X4) Sahara
Wrangler (4X4) Renegade
XJ=Cherokee SE
Cherokee Sport
Cherokee Country
ZJ=Grand Cherokee SE
Grand Cherokee Laredo
Grand Cherolee Limited
ZG=Grand Cherokee European
Y1=Wrangler
X1=Cherokee
Z1=Grand Cherokee
KDX=Vehicles

AR = Use as Required - = Non Illustrated Part P.A.R. = Paint as Required

CONTROLS, SHIFT WRANGLER, YJ
Figure 21R-1210

21R-1210

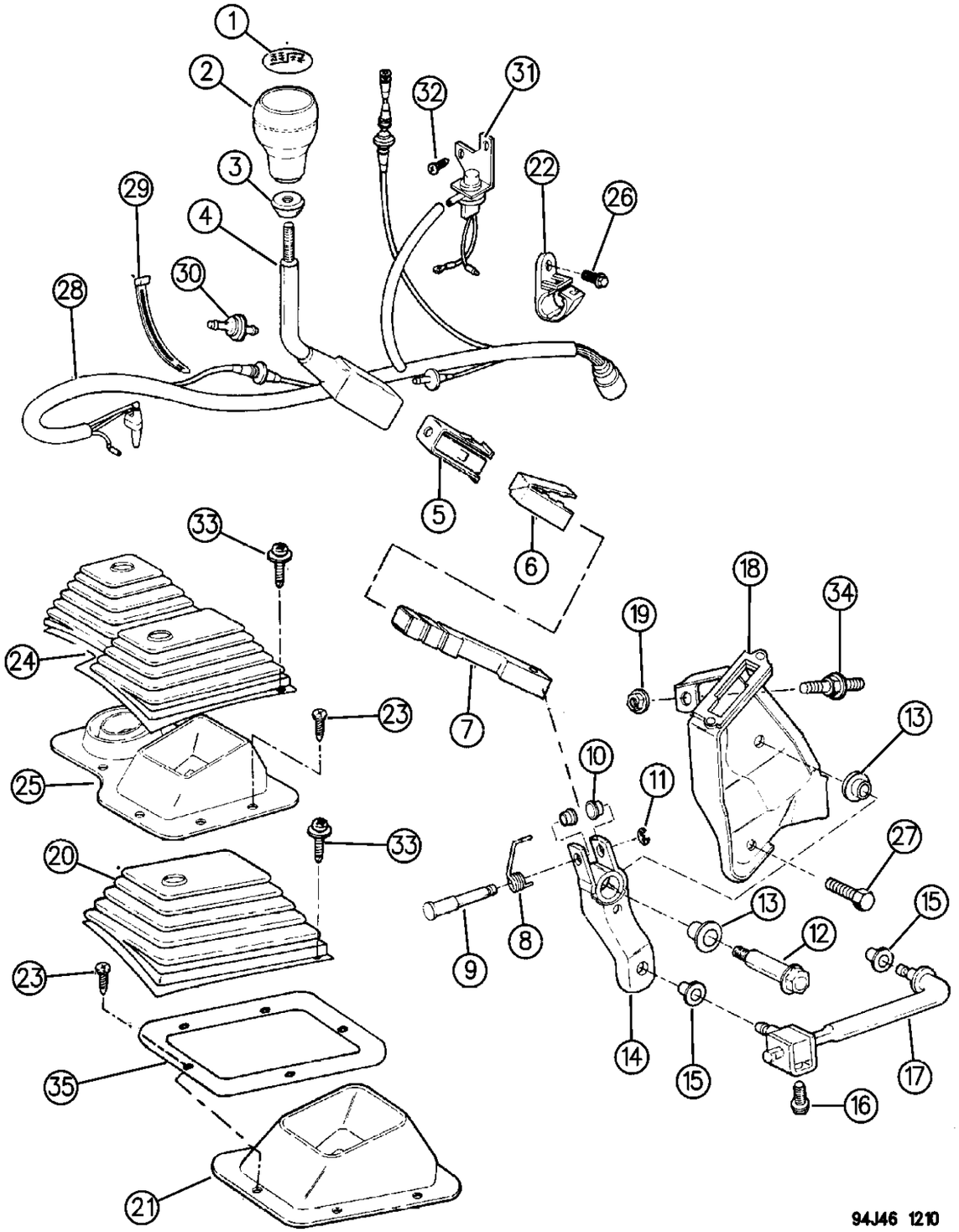

ITEM	PART NUMBER	QTY	BODY	MODEL	DESCRIPTION
35	5300 4295	1			RETAINER, Transfer Case Shift Lever Boot, With Automatic Transmission

MODEL CODES:

72=2 DR Wagon
74=4 DR Wagon
77=Open Body 93" Whlbase
78=Open Body 103" Whlbase - Export
T=2WD
J,N=4WD
U=4WD (RHD)

BODY STYLES:

YJ=Wrangler (4X4) "S"
Weangler (4X4) SE
Wrangler (4X4) Sahara
Wrangler (4X4) Renegade
XJ=Cherokee SE
Cherokee Sport
Cherokee Country
ZJ=Grand Cherokee SE
Grand Cherokee Laredo
Grand Cherolee Limited
ZG=Grand Cherokee European
Y1=Wrangler
X1=Cherokee
Z1=Grand Cherokee
KDX=Vehicles

AR = Use as Required - = Non Illustrated Part P.A.R. = Paint as Required

FORKS, RAILS, MISCELLANEOUS PARTS, SHIFT, (DHN) WRANGLER, YJ, CHEROKEE, GRAND CHEROKEE
Figure 21R-910

21R-1220

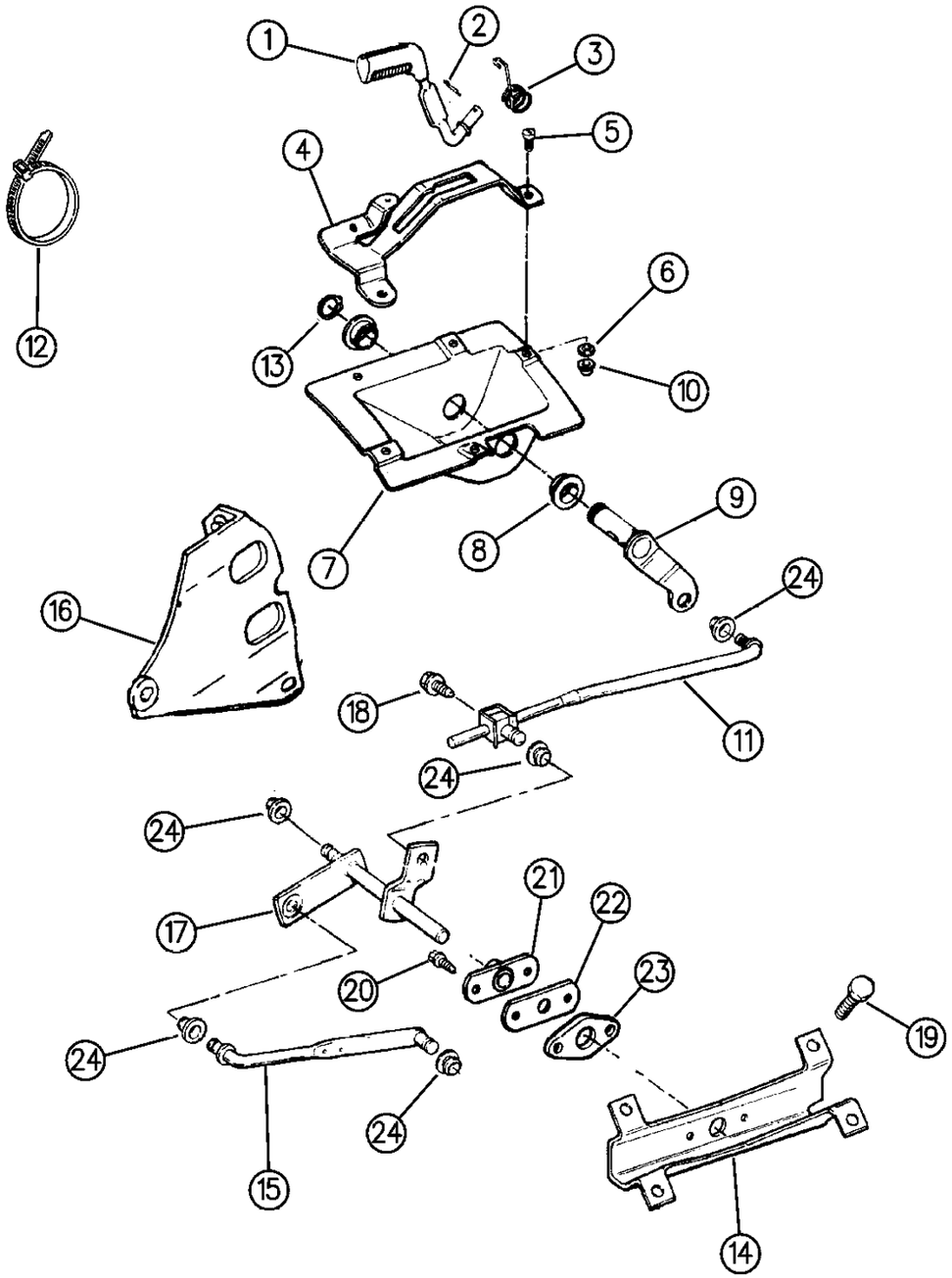

ITEM	PART NUMBER	QTY	BODY	MODEL	DESCRIPTION
1	5300 3354	1			HANDLE, Transfer Case Shift
	5207 9256	1			1996
2	J400 6723	1			PIN, Locking
3	5300 0809	1			SPRING
	5207 7650	1			RHD
4	5300 4715	1			GATE ***
	5207 7649	1			KDX, RHD
5	3420 1277	5			SCREW
6	6100 839	2			RETAINER, Push Nut
7	5300 1284	1			HOUSING, Shift
8	5300 0639	2			BUSHING
9	5300 5150	1			LEVER
10	3420 2050	5			RIVET NUT ***
11					ROD, Shift
	5300 4863	1			2.5L Four Cylinder Engine
	5300 4863	1			4.0L Six Cylinder Engine, w/Automatic Transmission
	5300 5446	1			4.0L Six Cylinder Engine, w/Manual Transmission
	5300 4957	1			2.1L Diesel
	5300 4863	1			w/2.5L Diesel Engine w/Manual Transmissiom, 1995
	5210 4073	1			w/Diesel Engine w/Manual Transmission 1996
12	J369 3058	4			STRAP
13	1150 5389	1			RING, Retaining
14					BRACKET
	5300 5096	1			2.1 Diesel, RHD
	5210 4017	1			2.5L Gas Engine w/All Transmissions, 4.0L Engine w/Automatic Transmission
	5210 4018	1			2.5L Turbo Inner Cooled Diesel, 4.0L w/Aisin Sienki Manual Transmission
15					ROD, Shift
	5300 4941	1			2.5L Four Cyliinder Engine, With Manual Transmission
	5300 5448	1			4.0L Six Cylinder Engine, With Five Speed Transmission
	5300 4942	1			4.0L Six Cylinder Engiine, With Automatic Transmission
	5300 4945	1			All Four Cylinder Diesel Engine
16					BRACKET, Transfer Case Torque Shaft Pivot
	5300 5069	1			2.5L Four Cylinder Engine, w/Manual Transmission
	5300 5071	1			4.0L Six Cylinder Engine, w/All Automatic Transmissions
	5207 7574	1			4.0L Six Cylinder Engine, w/Manual Transmission RHD
	5300 5069	1			2.1L Diesel Engine
	5207 8605	1			w/2.5l Diesel Engine RHD
17					SHAFT ASSY ***
	5300 5151	1			w/2.5L Gas Engine,w/All Transmissions, 4.0L Engine, w/ Automatic Transmission.

MODEL CODES:

72=2 DR Wagon
74=4 DR Wagon
77=Open Body 93" Whlbase
78=Open Body 103" Whlbase - Export
T=2WD
J,N=4WD
U=4WD (RHD)

BODY STYLES:

YJ=Wrangler (4X4) "S"
Weangler (4X4) SE
Wrangler (4X4) Sahara
Wrangler (4X4) Renegade
XJ=Cherokee SE
Cherokee Sport
Cherokee Country
ZJ=Grand Cherokee SE
Grand Cherokee Laredo
Grand Cherolee Limited
ZG=Grand Cherokee European
Y1=Wrangler
X1=Cherokee
Z1=Grand Cherokee
KDX=Vehicles

AR = Use as Required - = Non Illustrated Part P.A.R. = Paint as Required

FORKS, RAILS, MISCELLANEOUS PARTS, SHIFT, (DHN) WRANGLER, YJ, CHEROKEE, GRAND CHEROKEE
Figure 21R-910

21R-1220

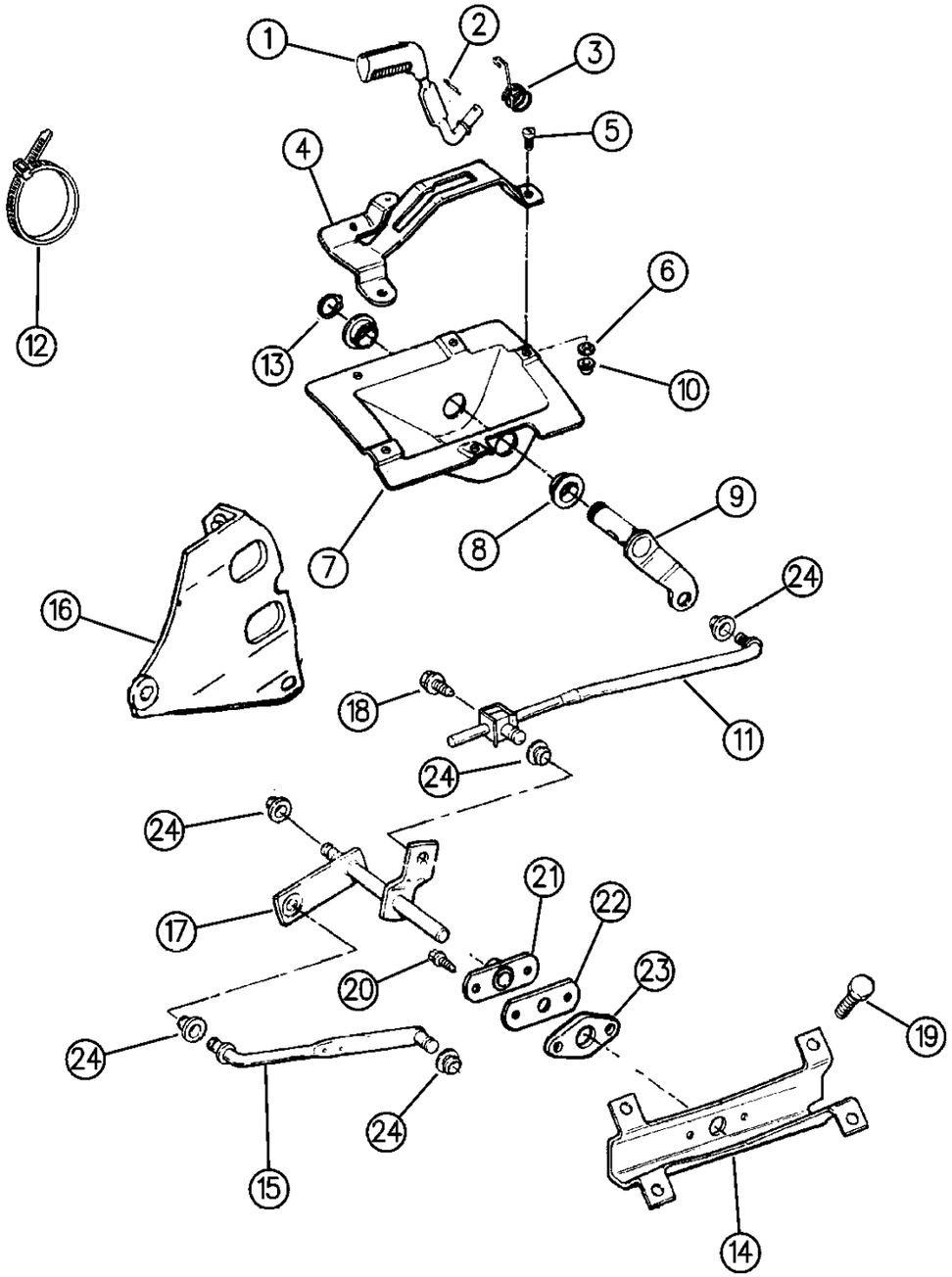

ITEM	PART NUMBER	QTY	BODY	MODEL	DESCRIPTION
	5300 5445	1			w/4.0L Engine,w/Manual Transmission
	5207 8541	1			w/2.5L Diesel Engine RHD
18	J400 6036	1			BOLT
19	3420 2407	4			SCREW, Hex Head
20	3420 1691	2			SCREW, (1/4-14x.75)
21	5207 8134	1			BEARING, Flange
22	5300 5154	1			GASKET
23	5300 5037	1			SPACER
24	3575 333	AR			GROMMET

MODEL CODES:

72=2 DR Wagon
74=4 DR Wagon
77=Open Body 93" Whlbase
78=Open Body 103" Whlbase - Export
T=2WD
J,N=4WD
U=4WD (RHD)

BODY STYLES:

YJ=Wrangler (4X4) "S"
Weangler (4X4) SE
Wrangler (4X4) Sahara
Wrangler (4X4) Renegade

XJ=Cherokee SE
Cherokee Sport
Cherokee Country

ZJ=Grand Cherokee SE
Grand Cherokee Laredo
Grand Cherolee Limited
ZG=Grand Cherokee European

Y1=Wrangler
X1=Cherokee
Z1=Grand Cherokee
KDX=Vehicles

AR = Use as Required - = Non Illustrated Part P.A.R. = Paint as Required

CONROLS SHIFT, (DHN) GRAND CHEROKEE
Figure 21R-1230

21R-1230E

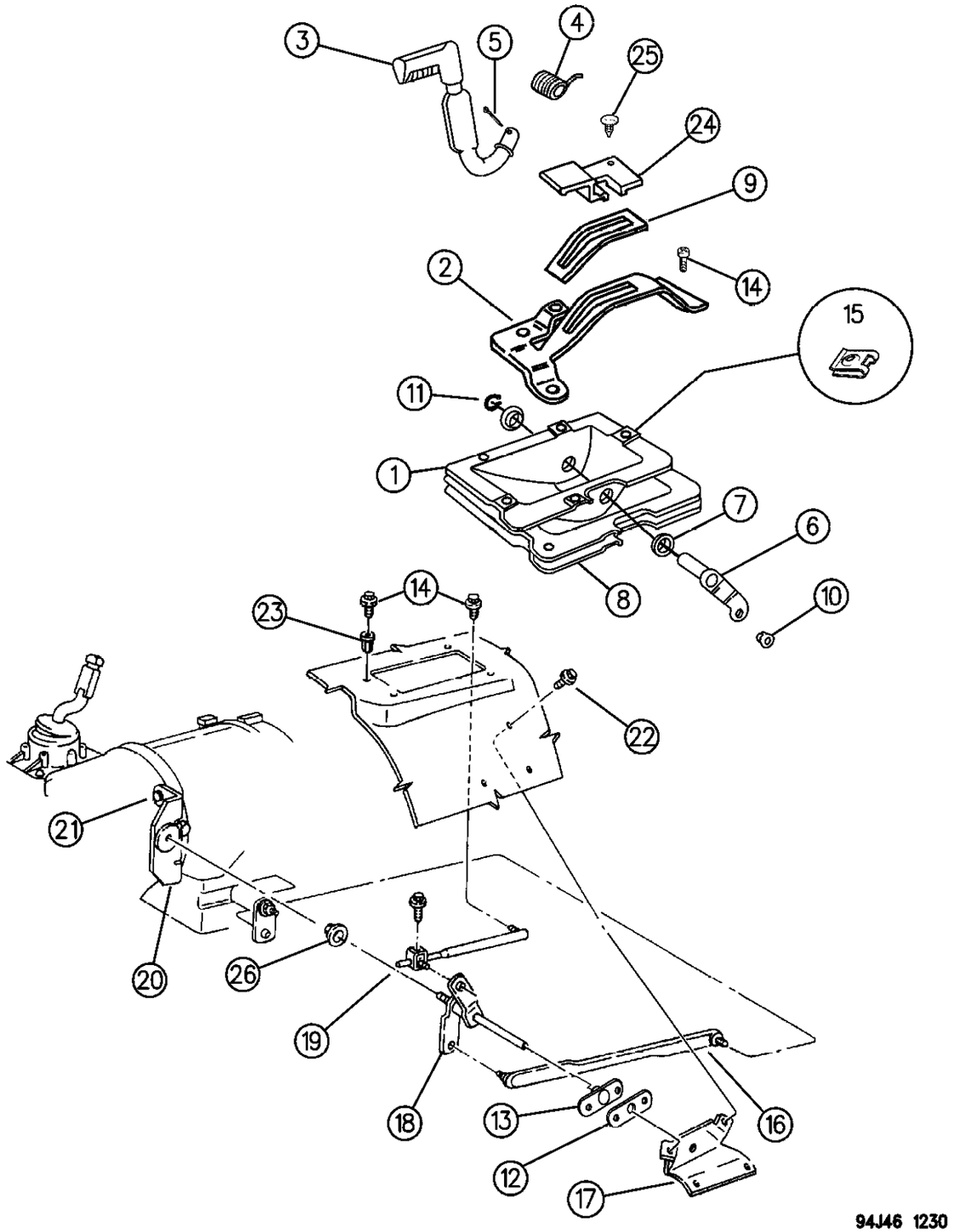

ITEM	PART NUMBER	QTY	BODY	MODEL	DESCRIPTION
1	5207 8427	1			HOUSING
2	5207 8496	1			GATE ***
	5305 4263	1		ZG	RHD,1996
3	5207 7526	1			LEVER and HANDLE ***
	5305 4279	1		ZG	1996
4	5207 7527	1			SPRING
5	J400 6723	1			PIN, Transfer Case
6	5207 7528	1			PIN and LEVER ***
	5305 4240	1		ZG	RHD 1996
	5207 8760	1			1996
7	5300 0639	2			BUSHING
8	5207 8059	1			GASKET
9	5207 8506	1			LINER
	5305 4242	1		ZG	RHD, 1996
10	J323 8418	1			SCREW, w/WASHER
11	1150 5389	1			RING, Retaining
12	5300 5154	1			GASKET
13	5207 8134	1			BEARING
14	3420 1277	AR			SCREW
15	1150 4118	1			RETAINER
16					ROD, Transfer Case Shift Lever
	5207 8115	1			w/4 Speed Automatic Transmission 42RE
	5207 8117	1			w/ 5 Speed Manual Trans.
17	5207 8022	1			BRACKET
18					SHAFT, Transfer Case Shaft
	5207 8665	1			w/5 Speed Manual Transmission, w/42RE and 46RH Automatic Transmission
19					ROD, Gear Selector
	5300 4863	1			w/All Transmissions Except 42RE Automatic Transmission
	5207 8113	1			w/42RE Automatic Transmission
20					BRACKET, Shift Lever
	5207 8122	1			w/ Manual Trans.
	5207 8106	1			w/42RE Automatic Transmission
	5207 8109	1			w/46RE Automatic Transmission
21	J400 6681	1			Nut, w/ WASHER ***
22	3420 2407	4			SCREW
23	3420 2050	4			RIVET-NUT ***
24					SELECTOR ***
	5207 7665	1		ZJ,ZG	LHD,1994-1996
	5305 4463	1		ZG	RHD, 1996
25	5207 7671	1			FASTENER, Push
26	5300 4810	1			BUSHING

MODEL CODES:

72=2 DR Wagon
74=4 DR Wagon
77=Open Body 93" Whlbase
78=Open Body 103" Whlbase - Export
T=2WD
J,N=4WD
U=4WD (RHD)

BODY STYLES:

YJ=Wrangler (4X4) "S"
Weangler (4X4) SE
Wrangler (4X4) Sahara
Wrangler (4X4) Renegade
XJ=Cherokee SE
Cherokee Sport
Cherokee Country
ZJ=Grand Cherokee SE
Grand Cherokee Laredo
Grand Cherolee Limited
ZG=Grand Cherokee European
Y1=Wrangler
X1=Cherokee
Z1=Grand Cherokee
KDX=Vehicles

AR = Use as Required - = Non Illustrated Part P.A.R. = Paint as Required

« RETURN TO GROUP INDEX

SAGIPARTS

GROUP-21T
TRANSFER CASE
(MODEL 242)

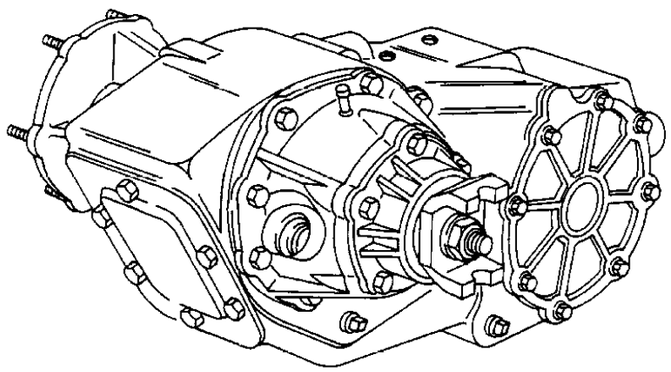

21M-100 TRANSFER CASE ASSY 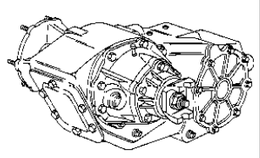	**21M-200** CASE & RELATED PARTS 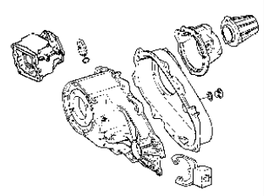	**21M-400** GEAR TRAIN 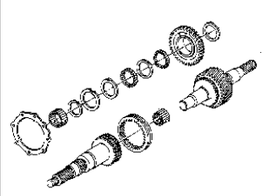	**21M-900** FORK & RAILS 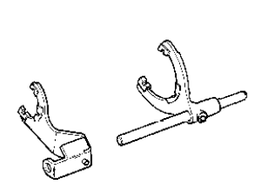
21M-1200 GEAR SHIHT CONTROLS 	SPEEDO GEAR & PINION SEE GROUP-21-P PINIONS		

GROUP 21T - TRANSFER CASE MODEL 242

ILLUSTRATION TITLE — **GROUP-FIG. NO.**

TRANSFER CASE ASSEMBLY

TRANSFER CASE, SELECT TRACK, (DHP) MODEL NPG 242 . . . . . Fig. 21T-110

CASE AND RELATED PARTS

CASE, EXTENSION AND MISCELLANEOUS PARTS SELECT TRACK, (DHP) CHEROKEE, GRAND CHEROKEE . . . . . Fig. 21T-210

GEAR TRAIN

GEAR TRAIN, SELECT TRACK, (DHP) CHEROKEE, GRAND CHEROKEE . . . . . Fig. 21T-410

FORKS AND RAILS

FORKS, RAILS - SHIFTING, SELECT TRACK, (DHP) CHEROKEE, GRAND CHEROKEE . . . . . Fig. 21T-910

GEAR SHIFT CONTROLS

FORKS, RAILS - SHIFTING, SELECT TRACK, (DHP) CHEROKEE, GRAND CHEROKEE . . . . . Fig. 21T-1210

CONROLS SHIFT, SELECT TRACK, (DHP) GRAND CHEROKEE . . . . . Fig. 21T-1220

TRANSFER CASE, SELECT TRACK, (DHP) MODEL NPG 242
Figure 21T-110

21T–110

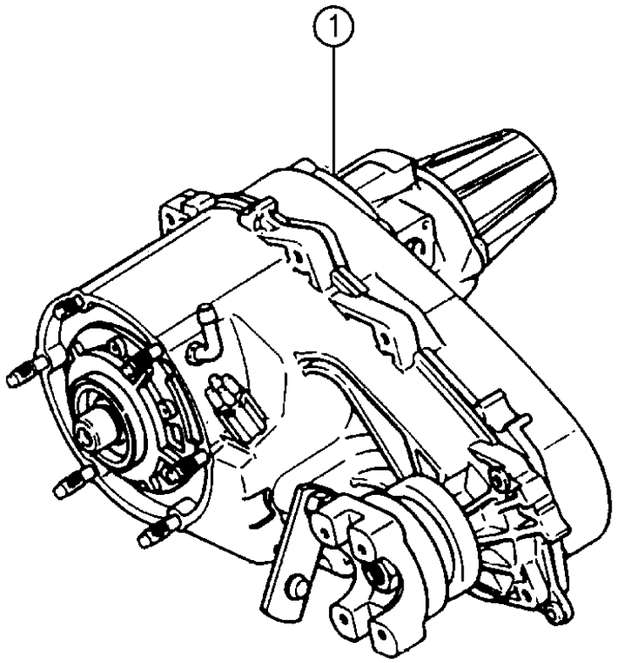

94J45 110

ITEM	PART NUMBER	QTY	BODY	MODEL	DESCRIPTION
1					TRANSFER CASE ASSEMBLY ***
					4.0L Engine, w/Export Equiptment Package or Police Package
	5209 8317	1	XJ		1994-95
	5209 8385	1	XJ		1996
					4.0L Engine, w/o Export Equiptment Package or Police Package
	5209 8315	1	XJ		1994-95
	5209 8384	1	XJ		1996
					4.0L Six Cylinder Engine, With 42RE Automatic Transmission
	5209 8531	1	ZJ		1994-95
	5209 8383	1	ZJ		1996

MODEL CODES:

72=2 DR Wagon
74=4 DR Wagon
77=Open Body 93" Whlbase
78=Open Body 103" Whlbase - Export
T=2WD
J,N=4WD
U=4WD (RHD)

BODY STYLES:

YJ=Wrangler (4X4) "S"
Weangler (4X4) SE
Wrangler (4X4) Sahara
Wrangler (4X4) Renegade
XJ=Cherokee SE
Cherokee Sport
Cherokee Country
ZJ=Grand Cherokee SE
Grand Cherokee Laredo
Grand Cherolee Limited
ZG=Grand Cherokee European
Y1=Wrangler
X1=Cherokee
Z1=Grand Cherokee
KDX=Vehicles

AR = Use as Required - = Non Illustrated Part P.A.R. = Paint as Required

« RETURN TO GROUP INDEX

CASE, EXTENSION AND MISCELLANEOUS PARTS SELECT TRACK, (DHP) CHEROKEE, GRAND CHEROKEE
Figure 21T-210

21T-210C

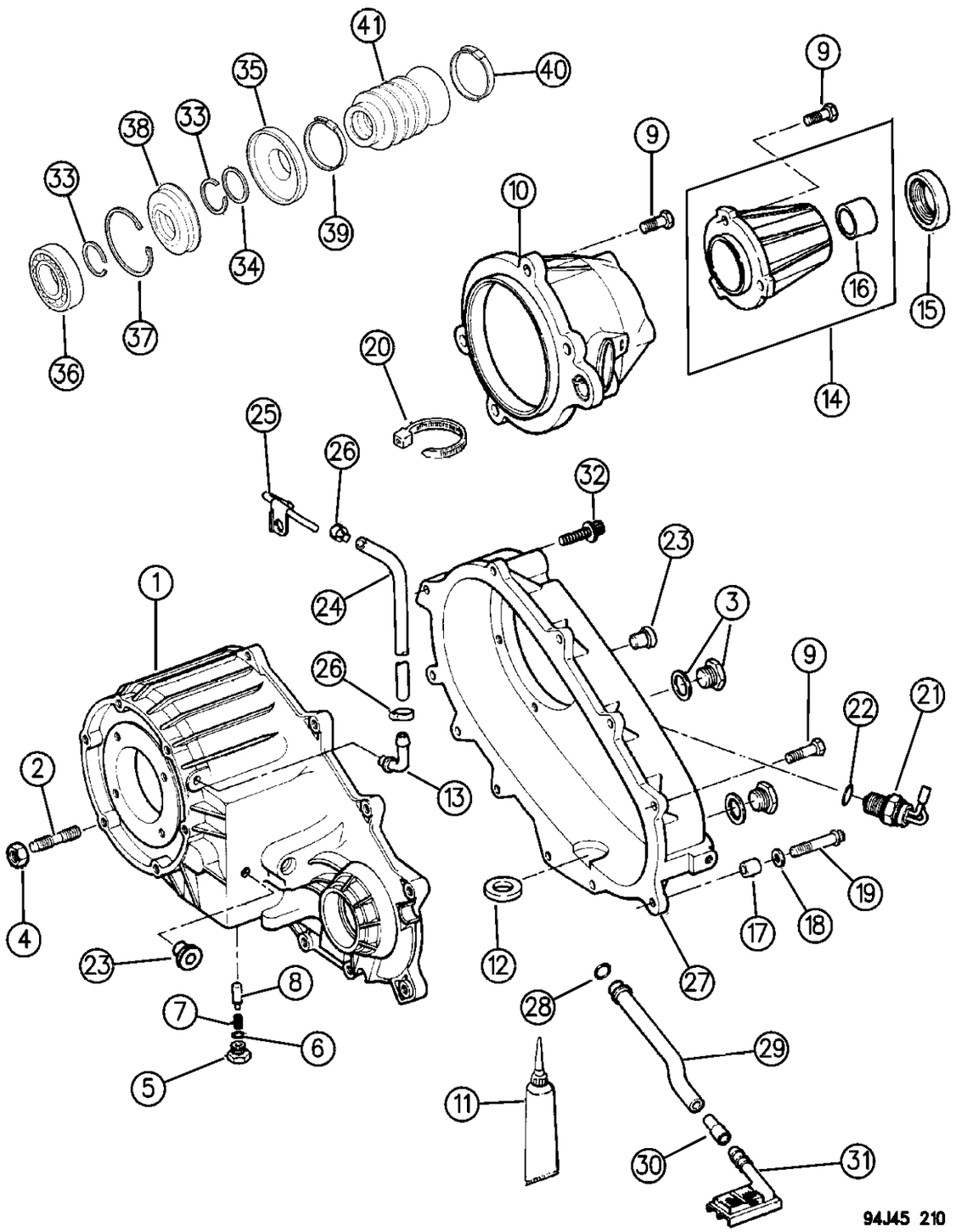

ITEM	PART NUMBER	QTY	BODY	MODEL	DESCRIPTION
1					CASE, Front ***
	5300 8225	1			w/52098045,52098046
	4638 947	1			w/52097528,53009359
	4796 971	1			w/52098531
	4796 979	1			w/52098315,52098317
	4856 389	1			w/52098383
	4798 144	1			w/52098384,385
2	4505 365	AR			STUD, Front Case
3	4210 616	2			PLUG, Drain
4	J400 6681	AR			NUT
5	5300 8216	1			SCREW
6	4167 963	1			SEAL
7	4638 497	1			SPRING
8	5300 8217	1			PLUNGER
9	J813 0984	15			BOLT
10					RETAINER
	8350 3524	1			w/52098315,52098317,52098531,52098384,52098385, 52098045,52098046
	4638 955	1			w/52097528,53009359
	4798 153	1			w/52098384,52098385
	4856 391	1			w/52098383
11	4318 025	AR			SEALER, Gasket-in-a-Tube ***
12	3681 601	1			MAGNET ***
13	4338 957	1			VENT
	4796 910	1			w/52098384,52098385,52098383
14	8350 3156	1			EXTENSION, Case
15	4638 904	1			SEAL, Rear Output
	4798 117	1			w/52098383,52098384,52098385,52098496
16	J813 4490	1			BUSHING
17	J813 0872	2			DOWEL ***
18	J400 1104	2			WASHER
19	1150 0831	2			BOLT
20	6015 756	1			STRAP
21					SWITCH, Transfer Case Indicator
	5600 6755	1			w/52098531,52097528,53009359,52098383
	8350 3525	1			w/52098045,52098046,52098315,52098317,52098384, 52098385
22	4338 956	1			SEAL
23	0015 105	2			PLUG
24	4443 176	AR			HOSE
25	5300 0805	1			TUBE
26	3300 0786	2			CLAMP

MODEL CODES:

72=2 DR Wagon
74=4 DR Wagon
77=Open Body 93" Whlbase
78=Open Body 103" Whlbase - Export
T=2WD
J,N=4WD
U=4WD (RHD)

BODY STYLES:

YJ=Wrangler (4X4) "S"
Weangler (4X4) SE
Wrangler (4X4) Sahara
Wrangler (4X4) Renegade
XJ=Cherokee SE
Cherokee Sport
Cherokee Country
ZJ=Grand Cherokee SE
Grand Cherokee Laredo
Grand Cherolee Limited
ZG=Grand Cherokee European
Y1=Wrangler
X1=Cherokee
Z1=Grand Cherokee
KDX=Vehicles

AR = Use as Required - = Non Illustrated Part P.A.R. = Paint as Required

CASE, EXTENSION AND MISCELLANEOUS PARTS SELECT TRACK, (DHP) CHEROKEE, GRAND CHEROKEE
Figure 21T-210

21T-210C

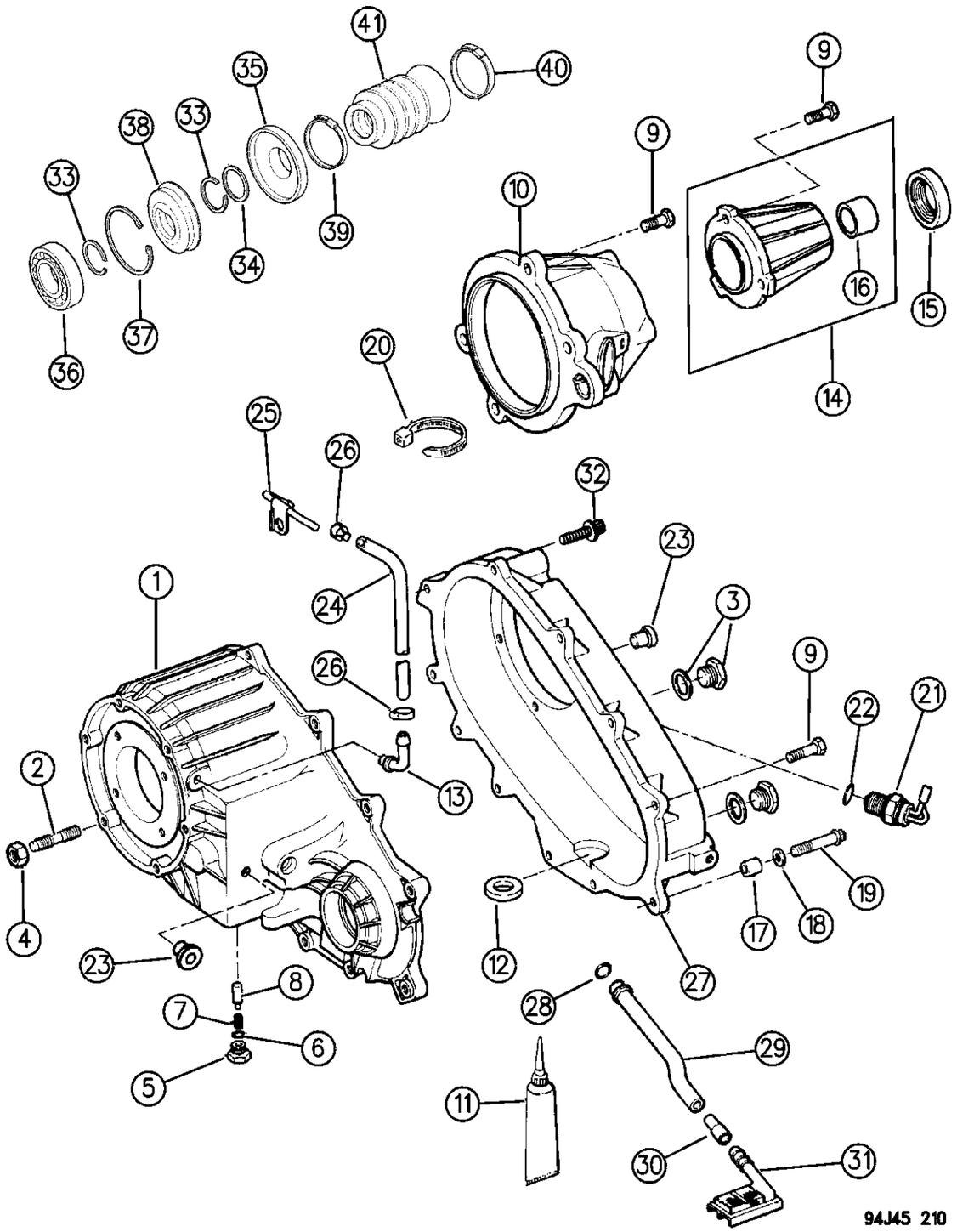

ITEM	PART NUMBER	QTY	BODY	MODEL	DESCRIPTION
27	8350 3520	1			CASE, Rear
28	4338 942	1			SEAL
29	8350 3523	1			TUBE
30	4443 175	AR			HOSE
31	4338 943	1			SCREEN
32	J813 0979	1			BOLT
33					RING, Bearing Retainer
	J813 4488	2			w/52098383,52098384,52098385
34					WASHER, Slinger
	4798 118	1			w/52098383,52098384,52098385
35					SLINGER ***
	4798 119	1			w/52098383,52098384,52098385
36					BEARING, Rear Output
	4338 892	1			w/52098383,52098384,52098385
37					RING, Rear Bearing I.D. Retaining
	4798 116	1			w/52098383,52098384,52098385
38	4798 117	1			SEAL, Oil, w/52098383,52098384,52098385
39					CLAMP (44.0)
	4798 121	1			w/52098383,52098384,52098385
40					CLAMP (48.5)
	4798 122	1			w/52098383,52098384,52098385
41					BOOT ***
	4798 123	1			w/52098383,52098384,52098385 ***

MODEL CODES:

72=2 DR Wagon
74=4 DR Wagon
77=Open Body 93" Whlbase
78=Open Body 103" Whlbase - Export
T=2WD
J,N=4WD
U=4WD (RHD)

BODY STYLES:

YJ=Wrangler (4X4) "S"
Weangler (4X4) SE
Wrangler (4X4) Sahara
Wrangler (4X4) Renegade
XJ=Cherokee SE
Cherokee Sport
Cherokee Country
ZJ=Grand Cherokee SE
Grand Cherokee Laredo
Grand Cherolee Limited
ZG=Grand Cherokee European
Y1=Wrangler
X1=Cherokee
Z1=Grand Cherokee
KDX=Vehicles

AR = Use as Required - = Non Illustrated Part P.A.R. = Paint as Required

GEAR TRAIN, SELECT TRACK, (DHP) CHEROKEE, GRAND CHEROKEE
Figure 21T-410

21T-410

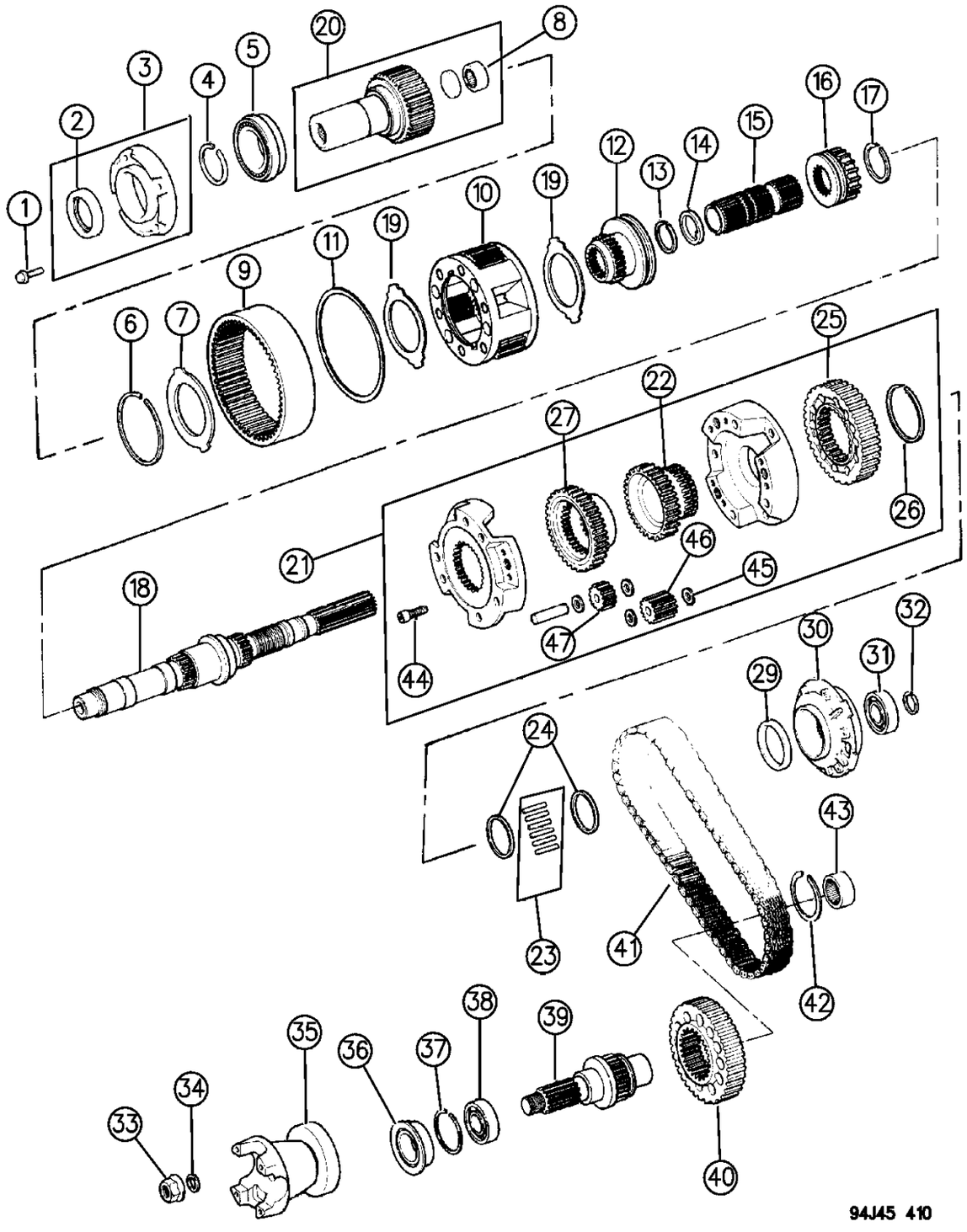

ITEM	PART NUMBER	QTY	BODY	MODEL	DESCRIPTION
1	6500 318	4			BOLT, Front Retainer
2	4167 929	1			SEAL, Front Retainer
3		1			RETAINER
	4338 973				
	4864 782	1			w/52098786
4	3821 558	1			RING, Retaining
5					BEARING, Input Ball
	4746 155	1			w/52097528,52098531,52098315,52098317,52098383, 52098384,52098385
6	4338 910	1			RING, Retaining
7	4338 909	1			RING, Retaining
8	8350 3507	1			BEARING, Input Needle Pilot
	4746 155	1			w/52098383,52098384,52098385
9					GEAR, Annulus (Order Front Case) ***
10	5300 6087	1			GEAR, Planetary
	4796 903	1			w/52098383,52098384,52098385
11	4219 065	1			RING, Retaining
12	5300 6090	1			SLEEVE, Range Mode Shift
	4798 279	1			w/52098383,52098384,52098385
13	8350 3540	1			RING, Retaining
14	8350 3539	1			WASHER
15	8350 3538	1			SLEEVE, Intermediate
	4798 277	1			w/52098383,52098384,52098385
16	8350 3542	1			SLEEVE, Mode
17	8350 3537	1			RING, Retaining
18	8350 3528	1			SHAFT, Main Drive
	4798 145	1			52098384,52098385,52098383
19	4338 908	1			WASHER, Thrust
20					GEAR, Input ***
	4636 792	1			w/52098045, 52098046
	4638 882	1			w/53009359
	4728 163	1			w/52097528
	4796 972	1			w/52098531
	4796 980	1			w/52098315,52098317
	4798 126	1			w/52098384,52098385,52098383
21	8350 3529	1			DIFFERENTIAL ASSEMBLY ***
22	8350 3530	1			SPROCKET
23	8350 3543	1			BEARING PACKAGE ***
24	8350 3533	2			SPACER
25	8350 3531	1			SPROCKET, Drive
26	8350 3532	1			RING, Retaining
27	8350 3536	1			GEAR ***

MODEL CODES:

72=2 DR Wagon
74=4 DR Wagon
77=Open Body 93" Whlbase
78=Open Body 103" Whlbase - Export
T=2WD
J,N=4WD
U=4WD (RHD)

BODY STYLES:

YJ=Wrangler (4X4) "S"
Weangler (4X4) SE
Wrangler (4X4) Sahara
Wrangler (4X4) Renegade
XJ=Cherokee SE
Cherokee Sport
Cherokee Country
ZJ=Grand Cherokee SE
Grand Cherokee Laredo
Grand Cherolee Limited
ZG=Grand Cherokee European
Y1=Wrangler
X1=Cherokee
Z1=Grand Cherokee
KDX=Vehicles

AR = Use as Required - = Non Illustrated Part P.A.R. = Paint as Required

GEAR TRAIN, SELECT TRACK, (DHP) CHEROKEE, GRAND CHEROKEE
Figure 21T-410

21T-410

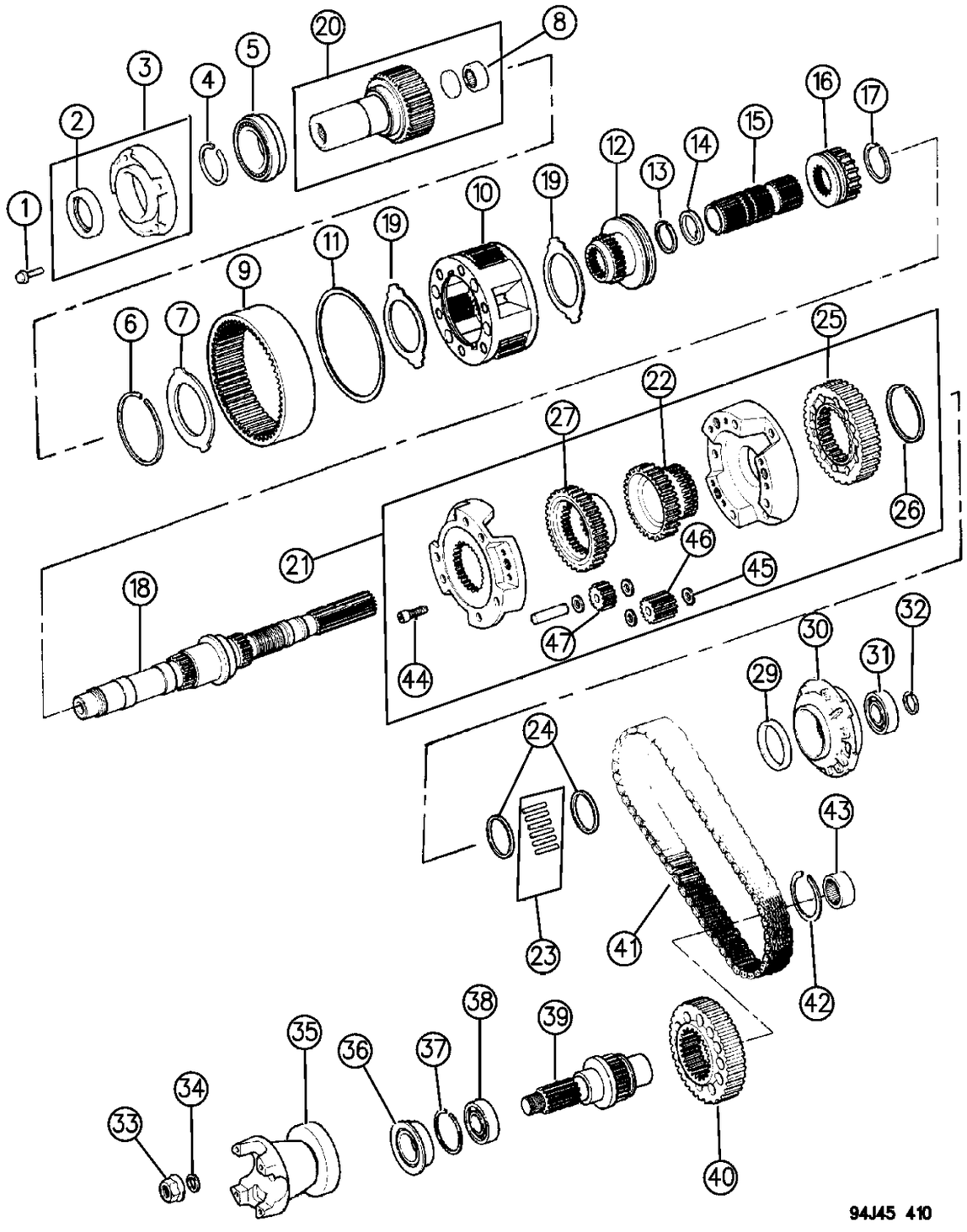

ITEM	PART NUMBER	QTY	BODY	MODEL	DESCRIPTION
29	4210 603	1			SEAL
30	4338 936	1			PUMP, Oil
31	4338 892	1			BEARING, Front Output
	4338 321	1			w/52098383,52098384,52098385
32	J813 4488	1			RING, Retaining
33	J813 0816	1			NUT
	4167 924	1			w/52098528,52098531
34	4210 973	1			WASHER, Rubber
35	4856 142	1			YOKE, Transfer Case, Front ***
	4798 138	1			w/52098384,52098385,52098383
36	4762 899	1			SEAL, Output, Front
	4798 125	1			w/52098383,52098384,52098385
37	0631 809	1			RING, Snap Bearing Front
38	4338 321	1			BEARING, Output, Front
39					SHAFT, Front Output
	8350 3517	1			w/52098315,52098317,520989045,52098046,52098384, 52098385
	4746 321	1			w/52097528, 53009359, 52098531,52098383
40					SPROCKET, Driven ***
	8350 3518	1			w/52098045,52098046,52098315,52098317,52098384, 52098385
	8350 3531	1			w/52098383
41					CHAIN, Drive
	8350 4575	1			w/52098046,52097528,53009359,52098531,52098315, 52098384,52098383
	4638 890	1			w/52098045,52098317,52098385
42	4167 991	1			RING, Retaining
43	4269 189	1			BEARING
44	8350 4167	6			BOLT, Transfer Case Differential
45	8350 4168	12			WASHER
46	8350 4169	3			GEAR, Transfer Case Differential
47	8350 4170	3			GEAR, Differential

MODEL CODES:

72=2 DR Wagon
74=4 DR Wagon
77=Open Body 93" Whlbase
78=Open Body 103" Whlbase - Export
T=2WD
J,N=4WD
U=4WD (RHD)

BODY STYLES:

YJ=Wrangler (4X4) "S"
Weangler (4X4) SE
Wrangler (4X4) Sahara
Wrangler (4X4) Renegade
XJ=Cherokee SE
Cherokee Sport
Cherokee Country
ZJ=Grand Cherokee SE
Grand Cherokee Laredo
Grand Cherolee Limited
ZG=Grand Cherokee European
Y1=Wrangler
X1=Cherokee
Z1=Grand Cherokee
KDX=Vehicles

AR = Use as Required - = Non Illustrated Part P.A.R. = Paint as Required

FORKS, RAILS - SHIFTING, SELECT TRACK, (DHP) CHEROKEE, GRAND CHEROKEE
Figure 21T-910

21T-910

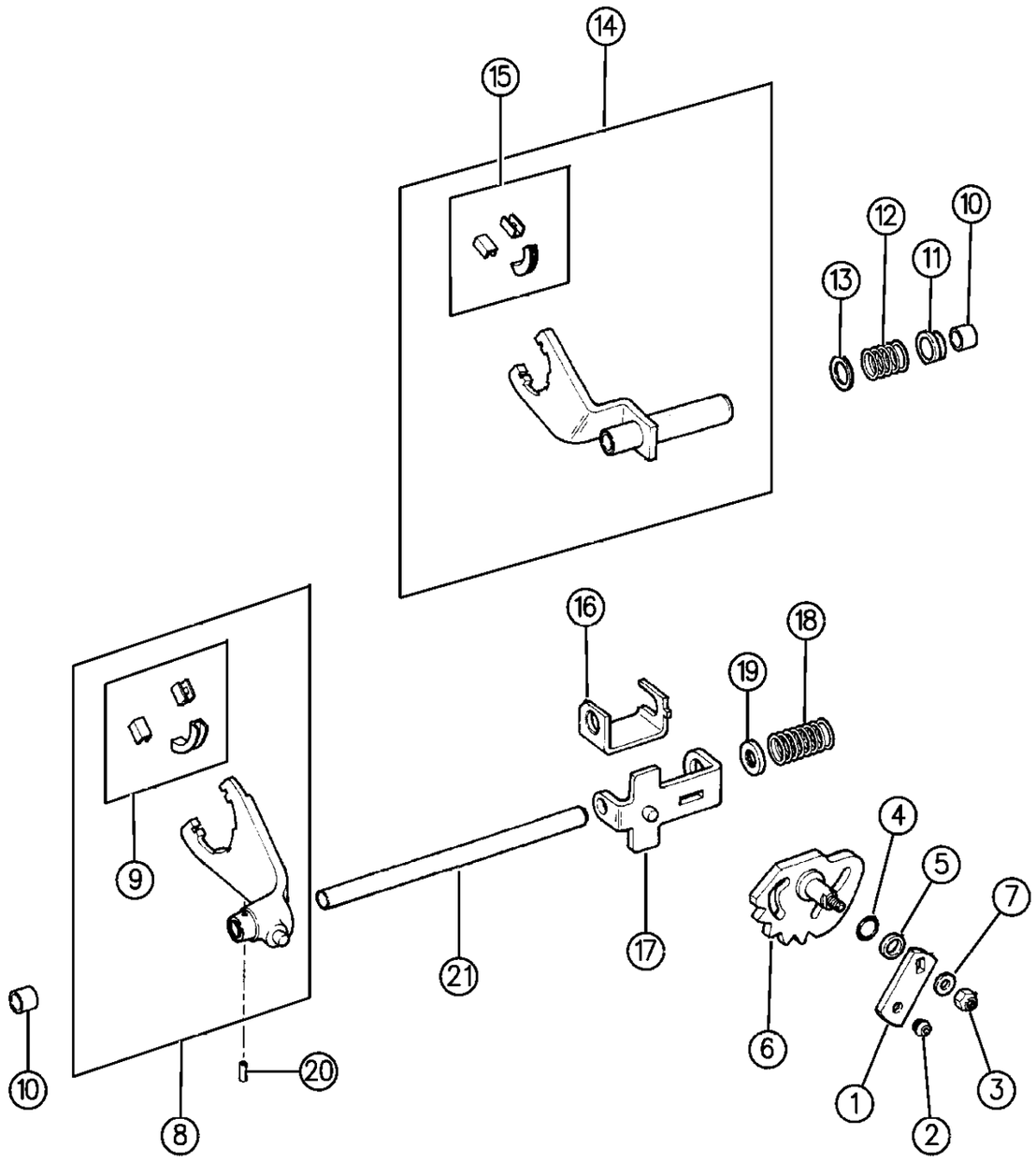

94J45 910

ITEM	PART NUMBER	QTY	BODY	MODEL	DESCRIPTION
1	5300 4227	1			LEVER, Transfer Case Shifting
2	5300 4810	1			GROMMET, Shift Lever
3	J813 0813	1			NUT
4	4167 963	1			SEAL, Shift Lever
5	4167 964	1			RETAINING RING, Shift Lever ***
6					SECTOR, Transfer Case Shift ***
	8350 3503	1			w/52098045,52098046,52098315,52098317,52098384, 52098385
	4638 949	1			w/52097528,53009359,52098531,52098383
7	J400 1104	1			WASHER
8	8350 3508	1			FORK, Range Shift
9					PAD PACKAGE, Shift Fork ***
	4167 969	2			Outer
	4167 970	1			Center
10	8350 3139	2			BUSHING, Mode Shift Rail
	J813 4291	2			
11	8350 3514	1			BUSHING, Shift Rail Retainer
	4338 945	1			
12	8350 3513	1			SPRING, Mode Shift Rail
13	8350 3512	1			WASHER, Mode Shift Rail
14					FORK, Mode Shift ***
	8350 3509	1			w/52098045,52098046,52098315,52098317,52098384, 52098385
	4638 950	1			w/52097528,53009359,52098531,52098383 ***
15					PAD PACKAGE, Shift Fork ***
	4167 969	2			Outer
	4338 376	1			Center
16	8350 3511	1			BRACKET, Shift, Inner
17	8350 3510	1			BRACKET, Shift, Outer
18	8350 3516	1			SPRING
19	8350 3515	1			CUP ***
20	1664 355	1			PIN, Shift Fork
21	8350 4469	1			RAIL, Shift Fork

MODEL CODES:

72=2 DR Wagon
74=4 DR Wagon
77=Open Body 93" Whlbase
78=Open Body 103" Whlbase - Export
T=2WD
J,N=4WD
U=4WD (RHD)

BODY STYLES:

YJ=Wrangler (4X4) "S"
Weangler (4X4) SE
Wrangler (4X4) Sahara
Wrangler (4X4) Renegade
XJ=Cherokee SE
Cherokee Sport
Cherokee Country
ZJ=Grand Cherokee SE
Grand Cherokee Laredo
Grand Cherolee Limited
ZG=Grand Cherokee European
Y1=Wrangler
X1=Cherokee
Z1=Grand Cherokee
KDX=Vehicles

AR = Use as Required - = Non Illustrated Part P.A.R. = Paint as Required

« RETURN TO GROUP INDEX

FORKS, RAILS - SHIFTING, SELECT TRACK, (DHP) CHEROKEE, GRAND CHEROKEE
Figure 21T-910

21T-1210

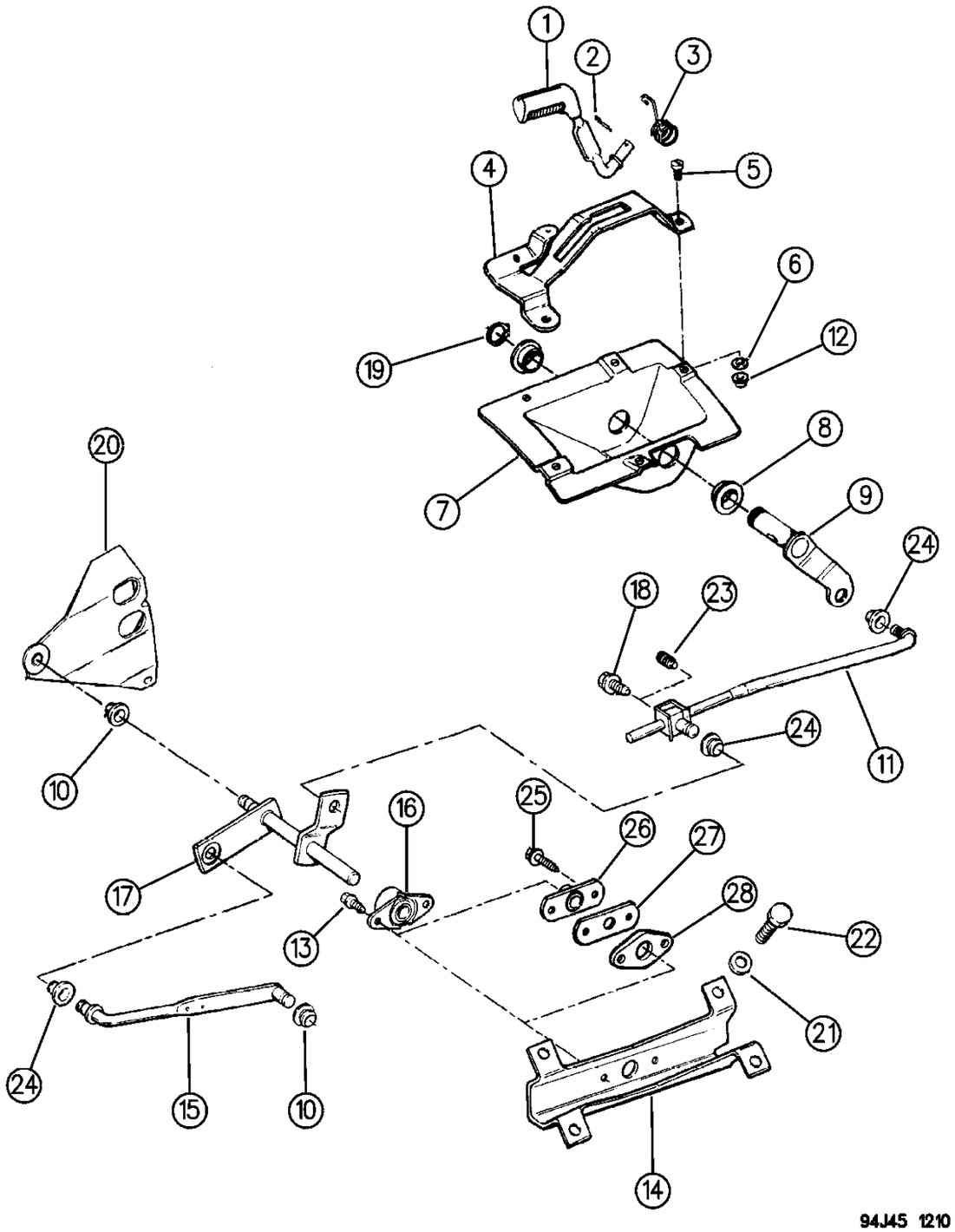

ITEM	PART NUMBER	QTY	BODY	MODEL	DESCRIPTION
1	5300 3354	1			HANDLE, Transfer Case Shift
	5207 9256	1			1996
2	J400 6723	1			PIN, Locking
3	5300 0809	1			SPRING
	5207 7650	1			RHD
4	5300 3475	1			GATE, Mode Selector ***
	5207 8007	1			RHD
5	3420 1277	5			SCREW
6	6100 839	2			RETAINER
7	5300 1284	1			HOUSING, Shift
8	5300 0639	2			BUSHING
9	5300 5150	1			LEVER AND PIN ASSEMBLY, Shift ***
10	5300 4810	2			BUSHING
11	5300 4863	1			ROD ASSEMBLY, Gear Selector with Clamp & Trunion ***
12	3420 1578	5			NUT
13	3420 1895	2			BOLT
14	5300 4956	1			BRACKET
15	5300 4943	1			ROD, Torque Shift to Shift Lever
16	5300 3355	1			BEARING
17	5300 5151	1			SHAFT ASSEMBLY, Shift Linkage ***
18	J400 6036	1			BOLT
19	1150 5389	1			RING, Retaining
20	5300 5071	1			BRACKET ASSEMBLY, Torque Shift Pivot
21	J044 6188	4			WASHER
22	3420 2407	4			BOLT
23	J400 7498	1			SCREW, Set
24	3575 333	3			GROMMET
25	3420 1691	2			BOLT
26	5300 5094	1			BEARING ASSEMBLY, Side Flange Mounting ***
27	5300 5154	1			GASKET
28	5300 5037	1			BUSHING, Bearing Spacer

MODEL CODES:

72=2 DR Wagon
74=4 DR Wagon
77=Open Body 93" Whlbase
78=Open Body 103" Whlbase - Export
T=2WD
J,N=4WD
U=4WD (RHD)

BODY STYLES:

YJ=Wrangler (4X4) "S"
Weangler (4X4) SE
Wrangler (4X4) Sahara
Wrangler (4X4) Renegade
XJ=Cherokee SE
Cherokee Sport
Cherokee Country
ZJ=Grand Cherokee SE
Grand Cherokee Laredo
Grand Cherolee Limited
ZG=Grand Cherokee European
Y1=Wrangler
X1=Cherokee
Z1=Grand Cherokee
KDX=Vehicles

AR = Use as Required - = Non Illustrated Part P.A.R. = Paint as Required

« RETURN TO GROUP INDEX

CONROLS SHIFT, SELECT TRACK, (DHP) GRAND CHEROKEE
Figure 21T-1220

21T-1220G

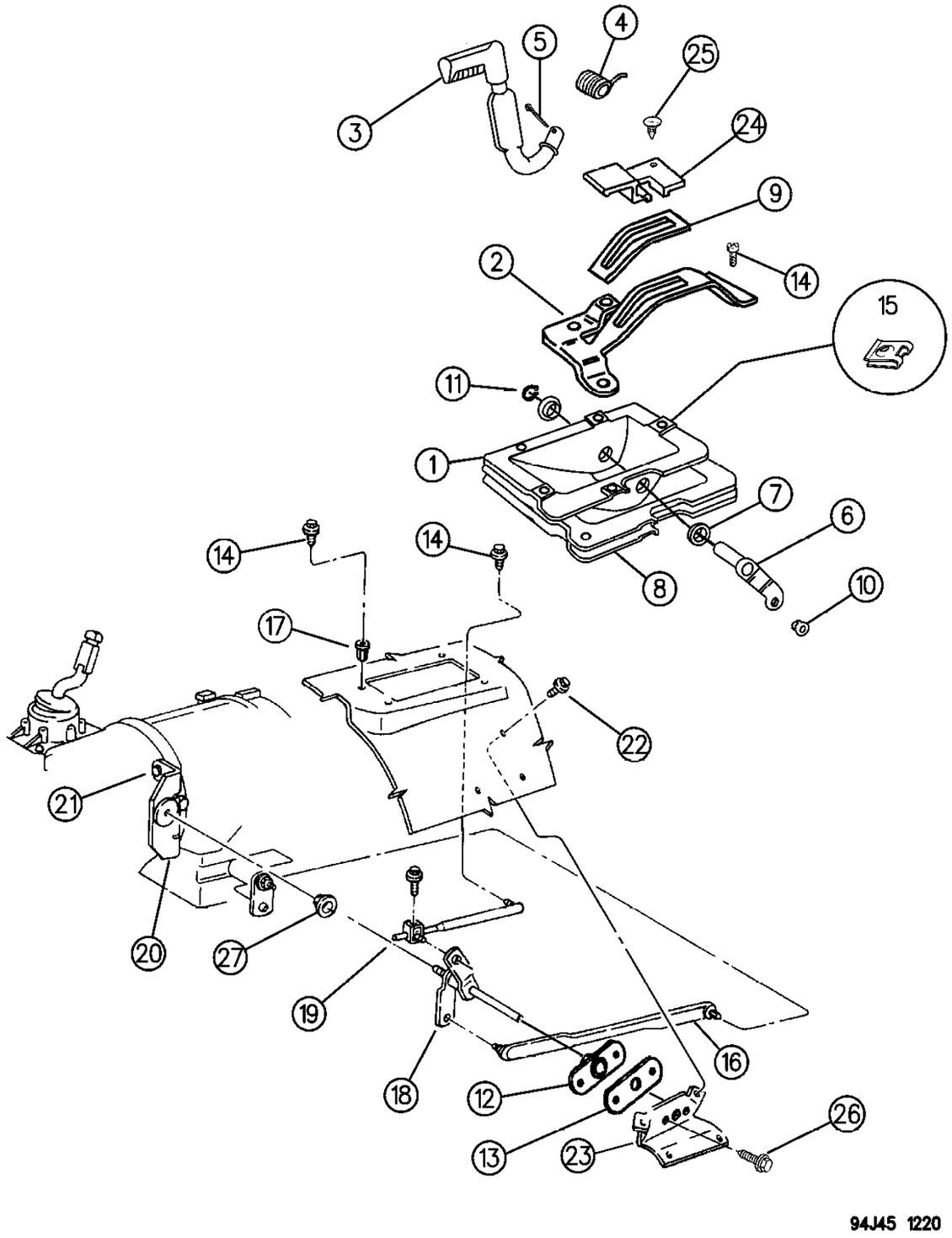

ITEM	PART NUMBER	QTY	BODY	MODEL	DESCRIPTION
1	5207 8427	1			HOUSING
2	5207 8757	1			GATE ***
3	5207 8762	1			LEVER and HANDLE ***
4	5207 8647	1			SPRING
5	J400 6723	1			PIN, Transfer Case
6	5207 8760	1			PIN and LEVER ***
7	5300 0639	2			BUSHING
8	5207 8059	1			GASKET
9	5207 8759	1			LINER
10	J323 8418	1			SCREW, w/WASHER
11	1150 5389	1			RING, Retaining
12	5207 8134	1			BEARING
13	5300 5154	1			GASKET
14	3420 1277	AR			SCREW
15	1150 4118	1			RETAINER
16	5207 8115	1			ROD, Transfer Case Shift Lever
17	3420 2050	4			RIVET-NUT ***
18					SHAFT, Transfer Case Shaft
	5207 8665	1			w/5 Speed Manual Transmission, w/42RE and 46RE Automatic Transmission
19					ROD, Gear Selector
	5300 4863	1			w/All Transmissions Except 42RE Automatic Transmission
	5207 8113	1			w/42RE Automatic Transmission
20					BRACKET, Shift Lever
	5207 8122	1			w/ Manual Trans.
	5207 8106	1			w/42RE Automatic Transmission
	5207 8109	1			w/46RE Automatic Transmission
21	J400 6681	1			Nut, w/ WASHER ***
22	3420 2407	4			SCREW
23	5207 8022	1			BRACKET
24	5207 8758	1			SELECTOR ***
25	5207 7671	1			FASTENER, Push
26	6032 518	2			SCREW
27	5300 4810	1			BUSHING

MODEL CODES:

72=2 DR Wagon
74=4 DR Wagon
77=Open Body 93" Whlbase
78=Open Body 103" Whlbase - Export
T=2WD
J,N=4WD
U=4WD (RHD)

BODY STYLES:

YJ=Wrangler (4X4) "S"
Weangler (4X4) SE
Wrangler (4X4) Sahara
Wrangler (4X4) Renegade
XJ=Cherokee SE
Cherokee Sport
Cherokee Country
ZJ=Grand Cherokee SE
Grand Cherokee Laredo
Grand Cherolee Limited
ZG=Grand Cherokee European
Y1=Wrangler
X1=Cherokee
Z1=Grand Cherokee
KDX=Vehicles

AR = Use as Required - = Non Illustrated Part P.A.R. = Paint as Required

« RETURN TO GROUP INDEX

SAGIPARTS

GROUP-21U
TRANSFER CASE
(MODEL 249)

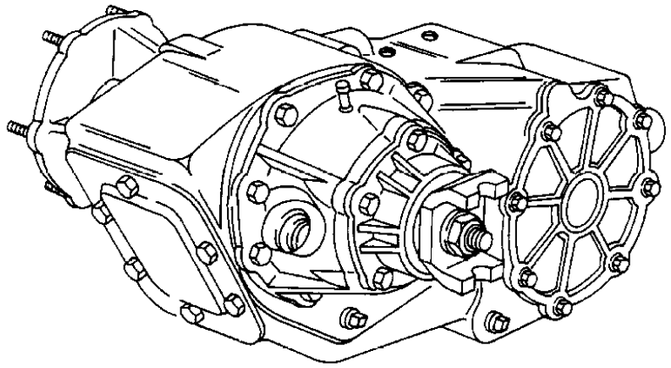

21M-100 TRANSFER CASE ASSY 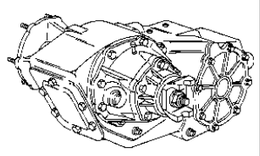	**21M-200** CASE & RELATED PARTS 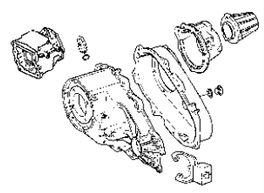	**21M-400** GEAR TRAIN 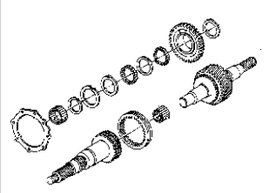	**21M-900** FORK & RAILS 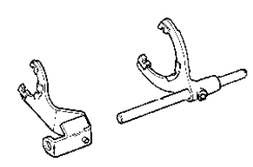
21M-1200 GEAR SHIHT CONTROLS 	SPEEDO GEAR & PINION SEE GROUP-21-P PINIONS		

GROUP 21U - TRANSFER CASE MODEL 249

ILLUSTRATION TITLE — **GROUP-FIG. NO.**

TRANSFER CASE ASSEMBLY
TRANSFER CASE, (DHR) MODEL NPG 249 . . . . . Fig. 21U-110

CASE AND RELATED PARTS
TRANSFER CASE, (DHR) MODEL NPG 249 . . . . . Fig. 21U-210

GEAR TRAIN
GEAR TRAIN, (DHR) . . . . . Fig. 21U-410

FORK AND RAILS
FORK AND RAIL, (DHR) . . . . . Fig. 21U-910

GEAR SHIFT CONTROLS
CONTROLS SHIFT, (DHR) GRAND CHEROKEE . . . . . Fig. 21U-1210

TRANSFER CASE, (DHR) MODEL NPG 249
Figure 21U-110

21U-110

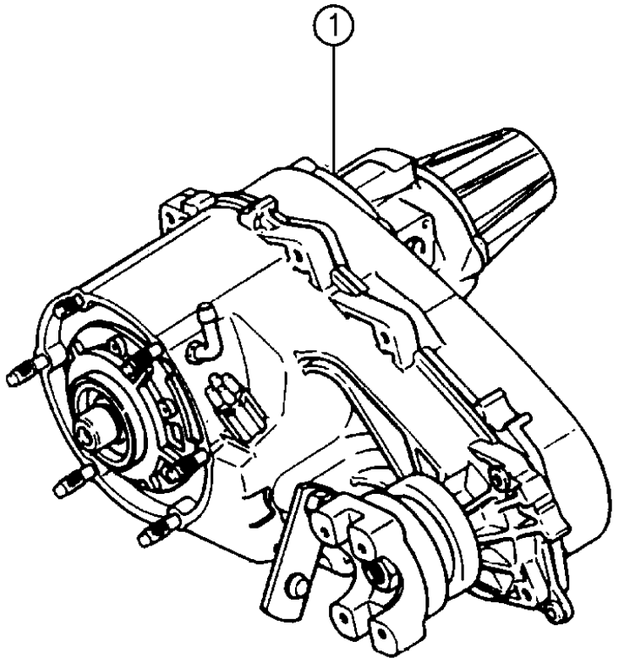

94J49 110

ITEM	PART NUMBER	QTY	BODY	MODEL	DESCRIPTION
1					TRANSFER CASE ASSEMBLY ***
					4.0L Six Cylinder Engine, With 42RE Automatic Transmission
	5209 7530	1			Stamped w/52097530
	5209 8532	1			Stamped w/52098532
					5.2L Eight Cylinder Eng., With 46RH Automatic Transmission
	5209 7529	1			Stamped w/52097529
	5209 8539	1			Stamped w/52098539
	5209 8682	1			Stamped w/52098682
					1996 ***
	5209 8267	1			Stamped w/52098267,52098882

MODEL CODES:

72=2 DR Wagon
74=4 DR Wagon
77=Open Body 93" Whlbase
78=Open Body 103" Whlbase - Export
T=2WD
J,N=4WD
U=4WD (RHD)

BODY STYLES:

YJ=Wrangler (4X4) "S"
Weangler (4X4) SE
Wrangler (4X4) Sahara
Wrangler (4X4) Renegade
XJ=Cherokee SE
Cherokee Sport
Cherokee Country
ZJ=Grand Cherokee SE
Grand Cherokee Laredo
Grand Cherolee Limited
ZG=Grand Cherokee European
Y1=Wrangler
X1=Cherokee
Z1=Grand Cherokee
KDX=Vehicles

AR = Use as Required - = Non Illustrated Part P.A.R. = Paint as Required

« RETURN TO GROUP INDEX

TRANSFER CASE, (DHR) MODEL NPG 249
Figure 21U-110

21U-210A

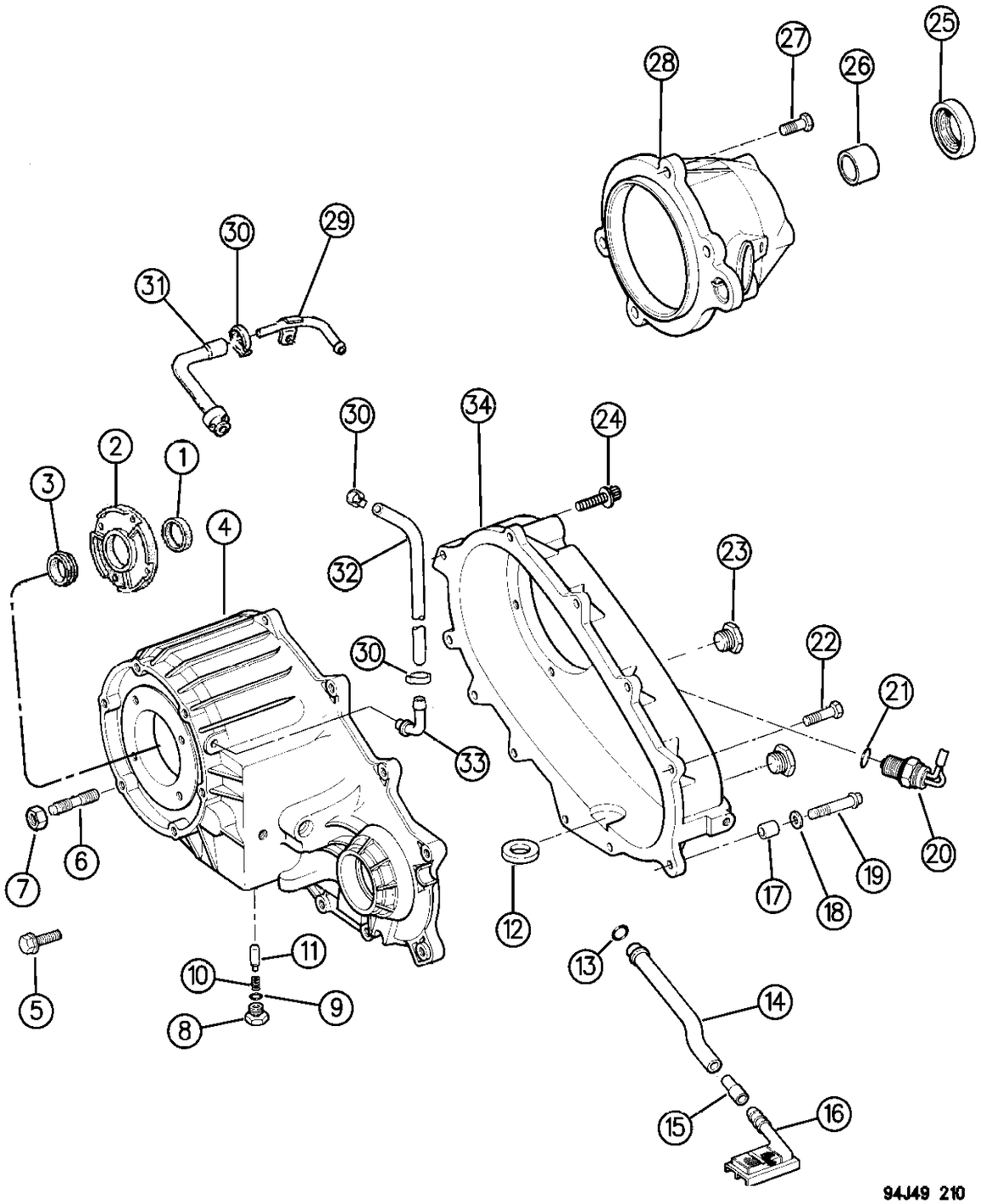

ITEM	PART NUMBER	QTY	BODY	MODEL	DESCRIPTION
1	4167 929	1			SEAL, Transfer Case Front Imput
2	4338 973	1			RETAINER, Input Gear
3	4338 891	1			BEARING, Front Input Shaft
	4746 155	1			w/52098532,52098539 ,52098267,52098786,52098882
4					CASE, Transfer, Front ***
	4638 881	1			w/52097529,52097530
	4796 974	1			w/52098532,52098539,52098682
	4798 124	1			w/52098267,52098882
5	6500 318	4			SCREW
6	4505 365	6			STUD
7	J400 6681	6			NUT
8	5300 8216	1			SCREW, Poppet
9	4338 956	1			SEAL
10	4638 497	1			SPRING, Poppet
11	5300 8217	1			PLUNGER, Poppet
12	3681 601	1			MAGNET ***
13	4338 942	1			SEAL
14	4638 893	1			TUBE
15	4338 944	1			CONNECTOR, Oil Tube
16	4338 943	1			SCREEN
17	4116 310	2			DOWEL ***
18	4210 983	2			WASHER
19	4210 614	2			SCREW
20	5600 6755	1			SWITCH, Transfer Case Indicator
21	4338 956	1			SEAL
22	4210 617	8			SCREW
23	4798 036	2			PLUG, Fill and Drain
24	J813 0979	1			SCREW
25	4638 904	1			SEAL, Rear Output Shaft
					w/52097529,52097526,52097696,52098318,52098319, 52098532,52098539,52098531,52098267,52098882
	4864 784	1			w/52098786
26	4638 902	1			BUSHING, Extension
27	6501 371	4			BOLT, Retainer
28					EXTENSION
	4728 161	1			w/52098532,52098539,52097529,52097530,52098267, 52098882
	4798 037	1			w/52098682
29	5300 4828	1			TUBE and CLIP ***
30	J400 6047	3			CLIP
31	5209 7701	1			HOSE and FILTER ***
32	J812 5823	1			TUBE (8.0 ID x 820.0L)

MODEL CODES:

72=2 DR Wagon
74=4 DR Wagon
77=Open Body 93" Whlbase
78=Open Body 103" Whlbase - Export
T=2WD
J,N=4WD
U=4WD (RHD)

BODY STYLES:

YJ=Wrangler (4X4) "S"
Weangler (4X4) SE
Wrangler (4X4) Sahara
Wrangler (4X4) Renegade
XJ=Cherokee SE
Cherokee Sport
Cherokee Country
ZJ=Grand Cherokee SE
Grand Cherokee Laredo
Grand Cherolee Limited
ZG=Grand Cherokee European
Y1=Wrangler
X1=Cherokee
Z1=Grand Cherokee
KDX=Vehicles

AR = Use as Required - = Non Illustrated Part P.A.R. = Paint as Required

TRANSFER CASE, (DHR) MODEL NPG 249
Figure 21U-110

21U-210A

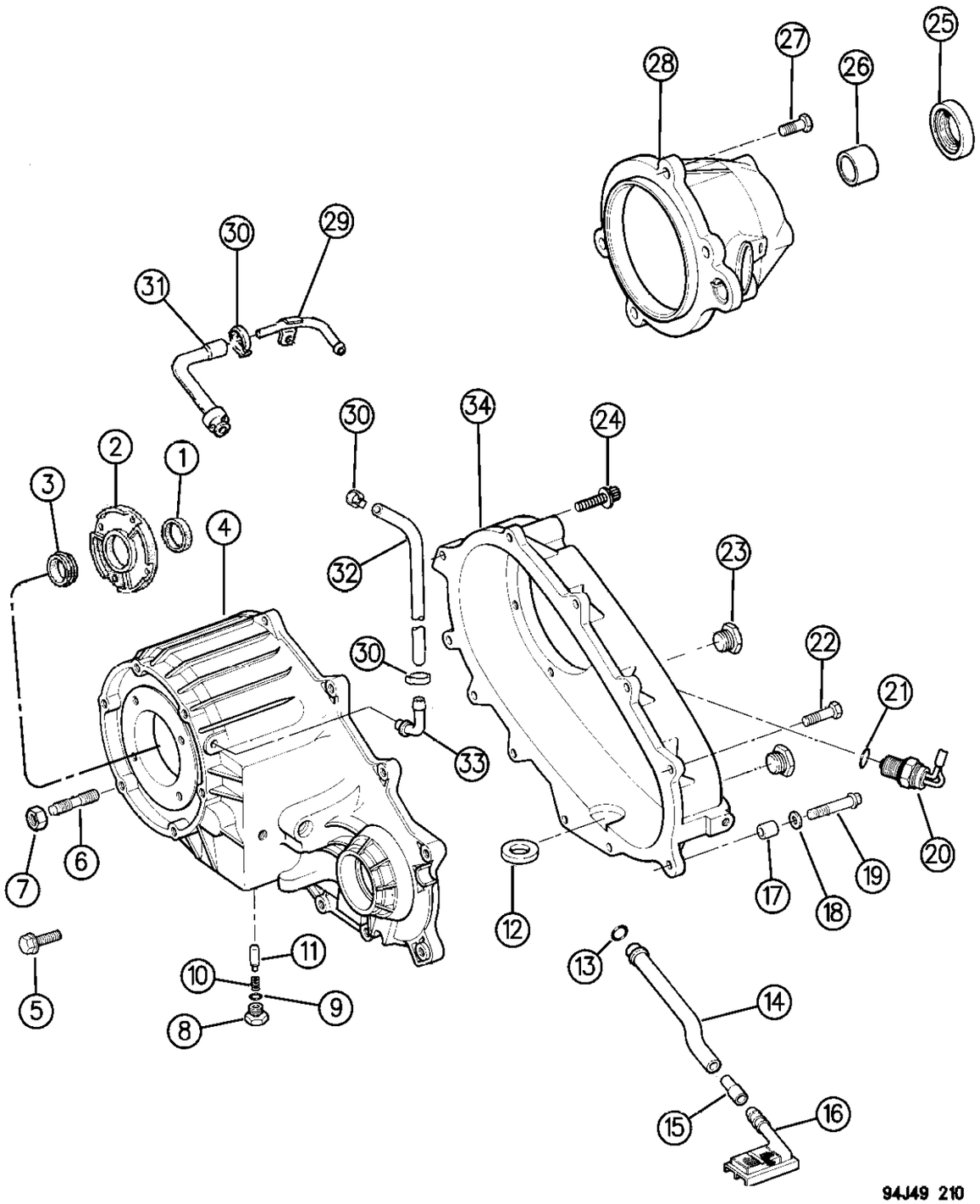

ITEM	PART NUMBER	QTY	BODY	MODEL	DESCRIPTION
33	4338 957	1			VENT
	4796 910	1			w/52098267,520988882
34	4638 892	1			CASE, Rear Half ***

MODEL CODES:

72=2 DR Wagon
74=4 DR Wagon
77=Open Body 93" Whlbase
78=Open Body 103" Whlbase - Export
T=2WD
J,N=4WD
U=4WD (RHD)

BODY STYLES:

YJ=Wrangler (4X4) "S"
Weangler (4X4) SE
Wrangler (4X4) Sahara
Wrangler (4X4) Renegade
XJ=Cherokee SE
Cherokee Sport
Cherokee Country
ZJ=Grand Cherokee SE
Grand Cherokee Laredo
Grand Cherolee Limited
ZG=Grand Cherokee European
Y1=Wrangler
X1=Cherokee
Z1=Grand Cherokee
KDX=Vehicles

AR = Use as Required - = Non Illustrated Part P.A.R. = Paint as Required

GEAR TRAIN, (DHR)
Figure 21U-410

21U-410B

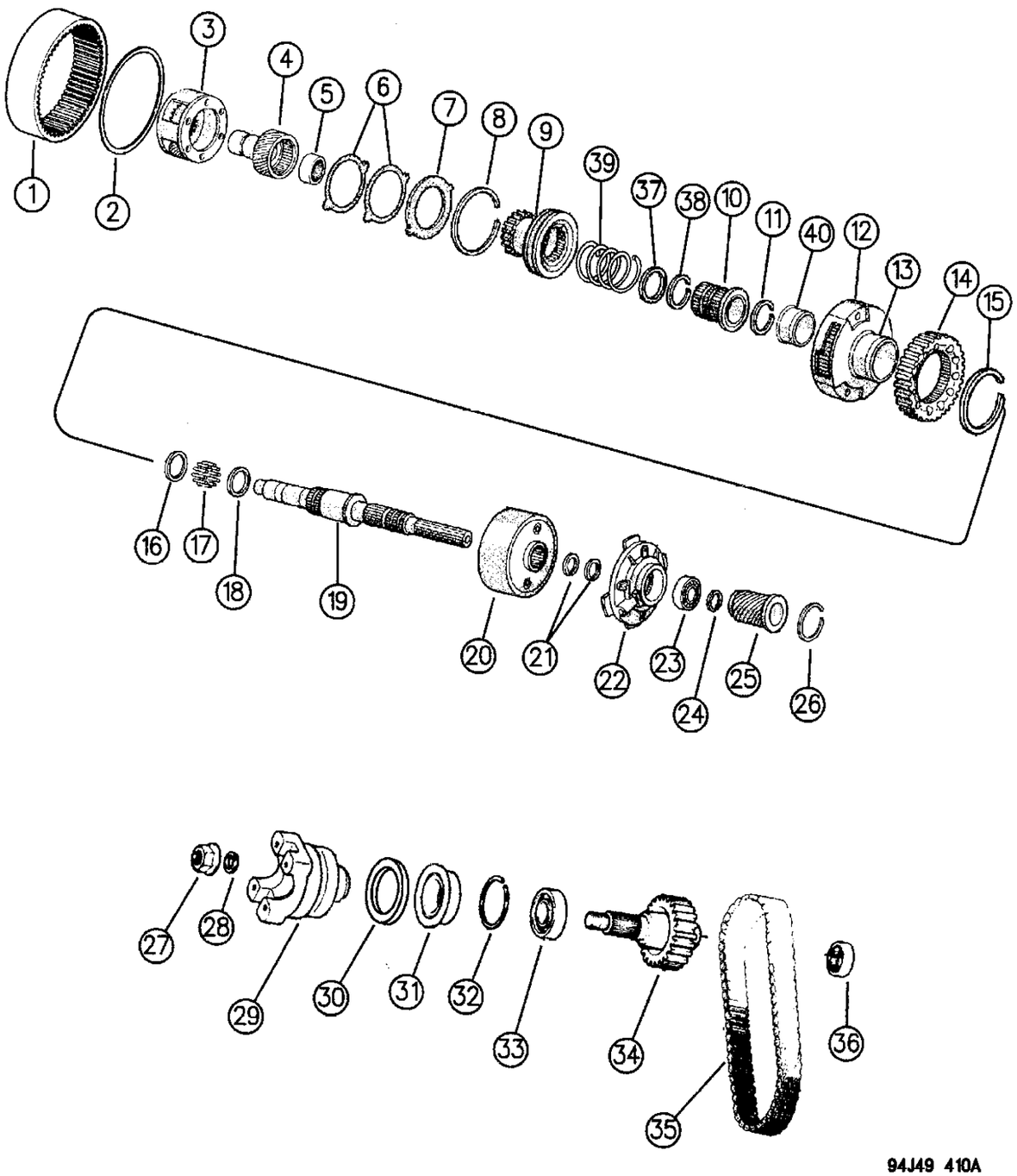

ITEM	PART NUMBER	QTY	BODY	MODEL	DESCRIPTION
1					GEAR, Annulus (Order Front Case) ***
2	4219 065	1			RING, Annulus
3					PLANETARY ***
	5300 6087	1			w/52097529,52097530
	4796 903	1			w/52098532,52098539,52098682,52098267,52098882
4					GEAR, Input ***
	4761 192	1			w/52097529
	4728 163	1			w/52097530 Transfer Case
	4796 972	1			w/52098532
	4796 976	1			w/52098682,52098539
	4798 126	1			w/52098267,52098882
5					BEARING, Input Gear
	4338 891	1			w/52097529,52097530
	4746 155	1			w/52098532,52098539,52098682,52098267,52098563, 52098882
6	4338 908	2			WASHER, Thrust
7	4338 909	1			RING
8	4338 910	1			RING, Retaining
9	5300 6090	1			SLEEVE, Range
	4798 132	1			w/52098267,52098882
10	4638 888	1			SHAFT, Transfer Case Intermediate Clutch
11	8350 3537	1			RING, Differenal Gear Snap
12					DIFFERENAL, Transfer Case ***
	4723 917	1			w/52098532, 52098539, 52098682, 52097529, 52097530
13	4728 156	1			GEAR, Sprocket Carrier ***
14	4728 157	1			SPROCKET, Drive (47 Teeth) ***
15	8350 3532	1			RING, Drive Sprocket Snap
16	8350 3533	1			SPACER, Sprocket Roller
17	8350 3543	1			BEARING, Needle
18	8350 3533	1			SPACER, Sprocket Roller
19	4728 155	1			SHAFT, Main
	4798 127	1			w/52098267,52098882
20					COUPLING, Viscous ***
					FULL TIME (1994-1995)
	4723 918	1			(1994 Stamped 52097530, 52097530, 52098539)
					ON DEMAND (1996)
	4798 137	1			
21	4638 895	2			RING, Viscous Retaining
22	4638 896	1			PUMP, Gerotor
23	4638 899	1			BEARING, Rear Ouput
24	4446 478	1			RING, Bearing Retainer
25	4638 900	1			GEAR, Speedometer Drive ***

MODEL CODES:

72=2 DR Wagon
74=4 DR Wagon
77=Open Body 93" Whlbase
78=Open Body 103" Whlbase - Export
T=2WD
J,N=4WD
U=4WD (RHD)

BODY STYLES:

YJ=Wrangler (4X4) "S"
Weangler (4X4) SE
Wrangler (4X4) Sahara
Wrangler (4X4) Renegade
XJ=Cherokee SE
Cherokee Sport
Cherokee Country
ZJ=Grand Cherokee SE
Grand Cherokee Laredo
Grand Cherolee Limited
ZG=Grand Cherokee European
Y1=Wrangler
X1=Cherokee
Z1=Grand Cherokee
KDX=Vehicles

AR = Use as Required - = Non Illustrated Part P.A.R. = Paint as Required

GEAR TRAIN, (DHR)
Figure 21U-410

21U-410B

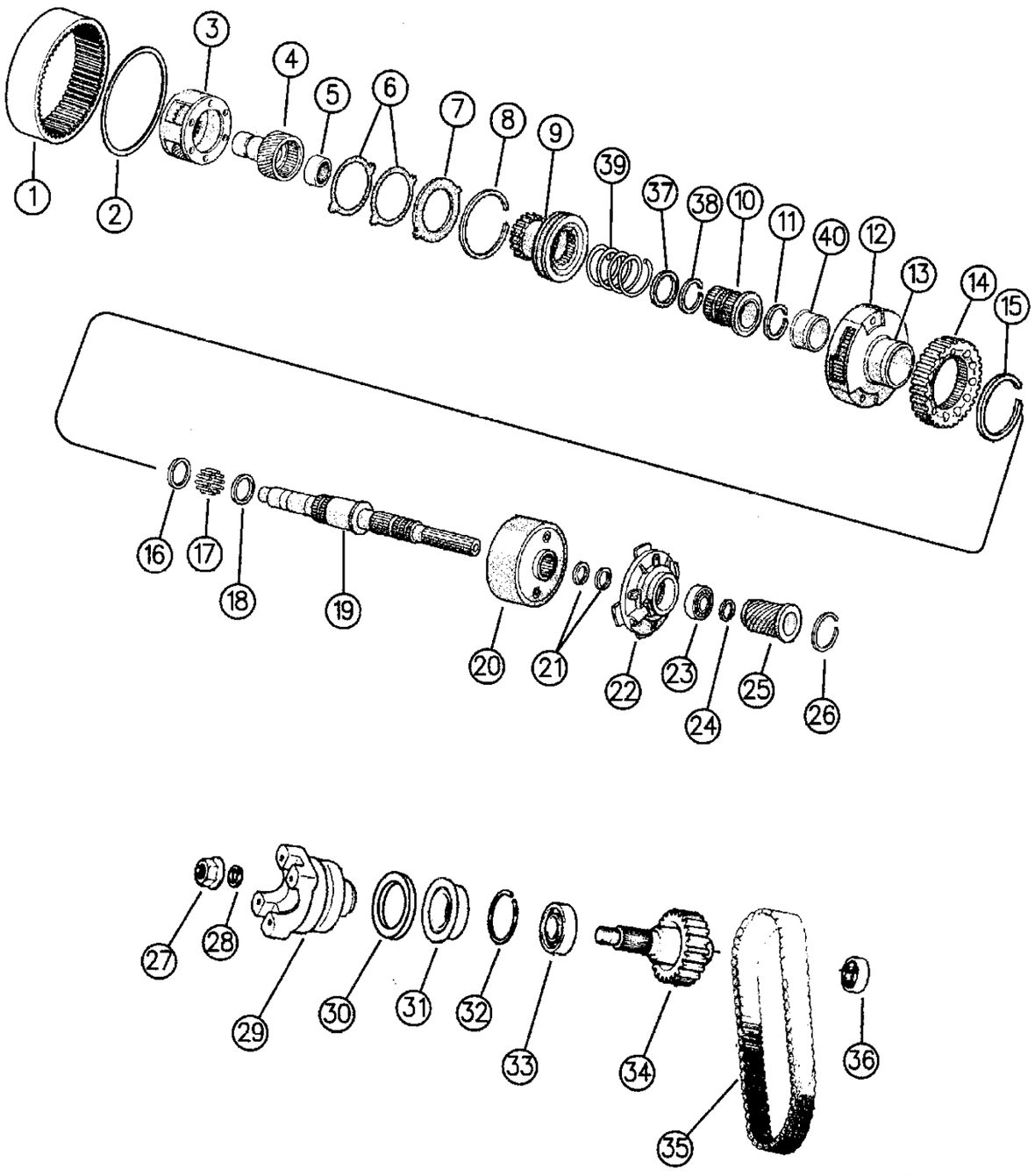

ITEM	PART NUMBER	QTY	BODY	MODEL	DESCRIPTION
26	4638 905	1			RING, Rear Output Yoke Retaining
27	4167 924	1			NUT
28	4210 973	1			WASHER, Rubber
29	4856 142	1			YOKE ***
	4798 138	1			w/52097267,52098882
30	4797 884	1			GUARD
31	4762 899	1			SEAL
	4798 125	1			w/52098267,52098882
32	0631 809	1			RING
33	2466 224	1			BEARING, Output Shaft
34	4728 158	1			SHAFT, Front Output
35	4728 159	1			CHAIN ***
36	4269 189	1			BEARING, Output Shaft Rear
37	8350 3539	1			RING, Thrust
38	8350 3540	1			RING, Retaining
39	4798 131	1			SPRING
40	4798 133	1			GEAR, Differential ***

MODEL CODES:

72=2 DR Wagon
74=4 DR Wagon
77=Open Body 93" Whlbase
78=Open Body 103" Whlbase - Export
T=2WD
J,N=4WD
U=4WD (RHD)

BODY STYLES:

YJ=Wrangler (4X4) "S"
Weangler (4X4) SE
Wrangler (4X4) Sahara
Wrangler (4X4) Renegade
XJ=Cherokee SE
Cherokee Sport
Cherokee Country
ZJ=Grand Cherokee SE
Grand Cherokee Laredo
Grand Cherolee Limited
ZG=Grand Cherokee European
Y1=Wrangler
X1=Cherokee
Z1=Grand Cherokee
KDX=Vehicles

AR = Use as Required - = Non Illustrated Part P.A.R. = Paint as Required

FORK AND RAIL, (DHR)
Figure 21U-910

21U-910

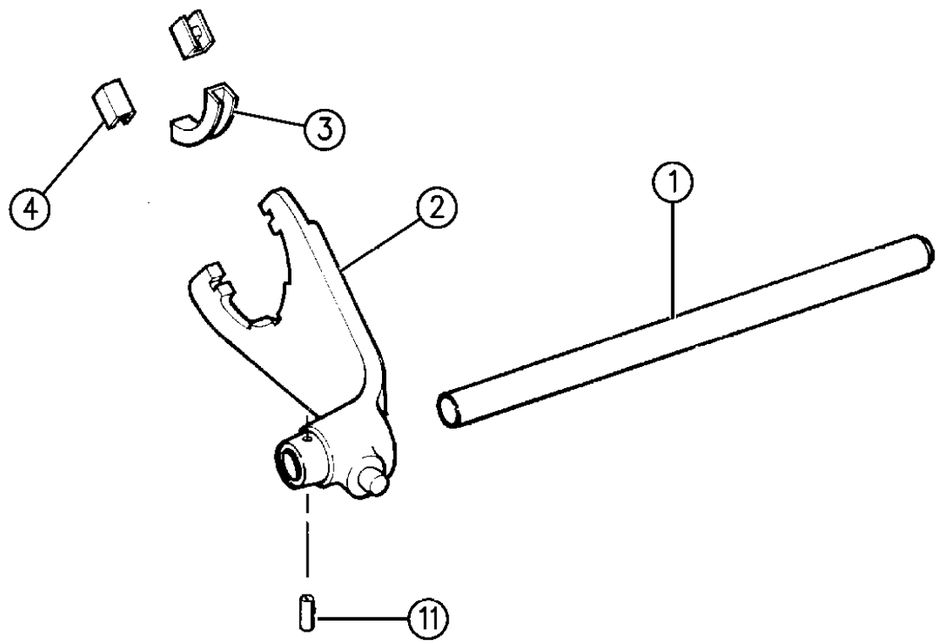

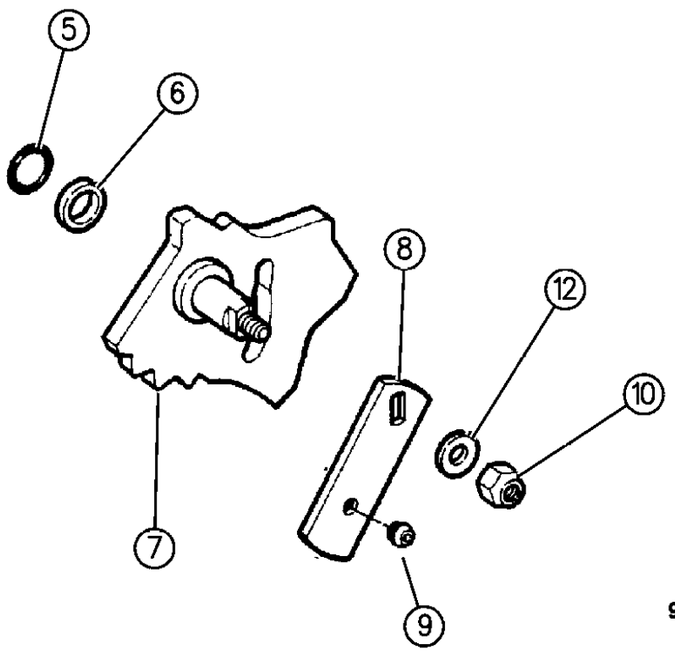

94J49 910

ITEM	PART NUMBER	QTY	BODY	MODEL	DESCRIPTION
1	8350 4469	1			RAIL, Shift
	4798 135	1			w/52098267,52098882
2	8350 3508	1			FORK, Range, (Tag #52098539, #52097529) ***
	4864 783	1	ZG		5.2L Engine
	4798 136	1			w/52098267,52098882
3					PAD, Center
	4167 970	1			w/52097529,52097530,52098532,52098539
	4798 034	1			w/52098682
4					PAD
	4167 969	2			w/52097529,52097530,52098532,52098539
	4637 838	2			w/52098682
5					SEAL, Shift Lever
	4167 963	1			w/52097529,52097530,52098532,52098539,52098267
	4798 030	1			w/52098682
6					RETAINER
	4167 964	1			w/520987529,520987530,52098532,52098539,52098267, 52098882
	4798 031	1			w/52098682
7	4638 889	1			SECTOR ***
	4897 517AA	1			w/52098267,52098882
8	4638 906	1			LEVER
9	5300 4810	1			GROMMET, Shift Lever
10	0152 345	1			NUT (.375-24)
11	1664 355	1			PIN
12					WASHER (DNS)

MODEL CODES:

72=2 DR Wagon
74=4 DR Wagon
77=Open Body 93" Whlbase
78=Open Body 103" Whlbase - Export
T=2WD
J,N=4WD
U=4WD (RHD)

BODY STYLES:

YJ=Wrangler (4X4) "S"
Weangler (4X4) SE
Wrangler (4X4) Sahara
Wrangler (4X4) Renegade
XJ=Cherokee SE
Cherokee Sport
Cherokee Country
ZJ=Grand Cherokee SE
Grand Cherokee Laredo
Grand Cherolee Limited
ZG=Grand Cherokee European
Y1=Wrangler
X1=Cherokee
Z1=Grand Cherokee
KDX=Vehicles

AR = Use as Required - = Non Illustrated Part P.A.R. = Paint as Required

« RETURN TO GROUP INDEX

CONTROLS SHIFT, (DHR) GRAND CHEROKEE
Figure 21U-1210

21U-1210G

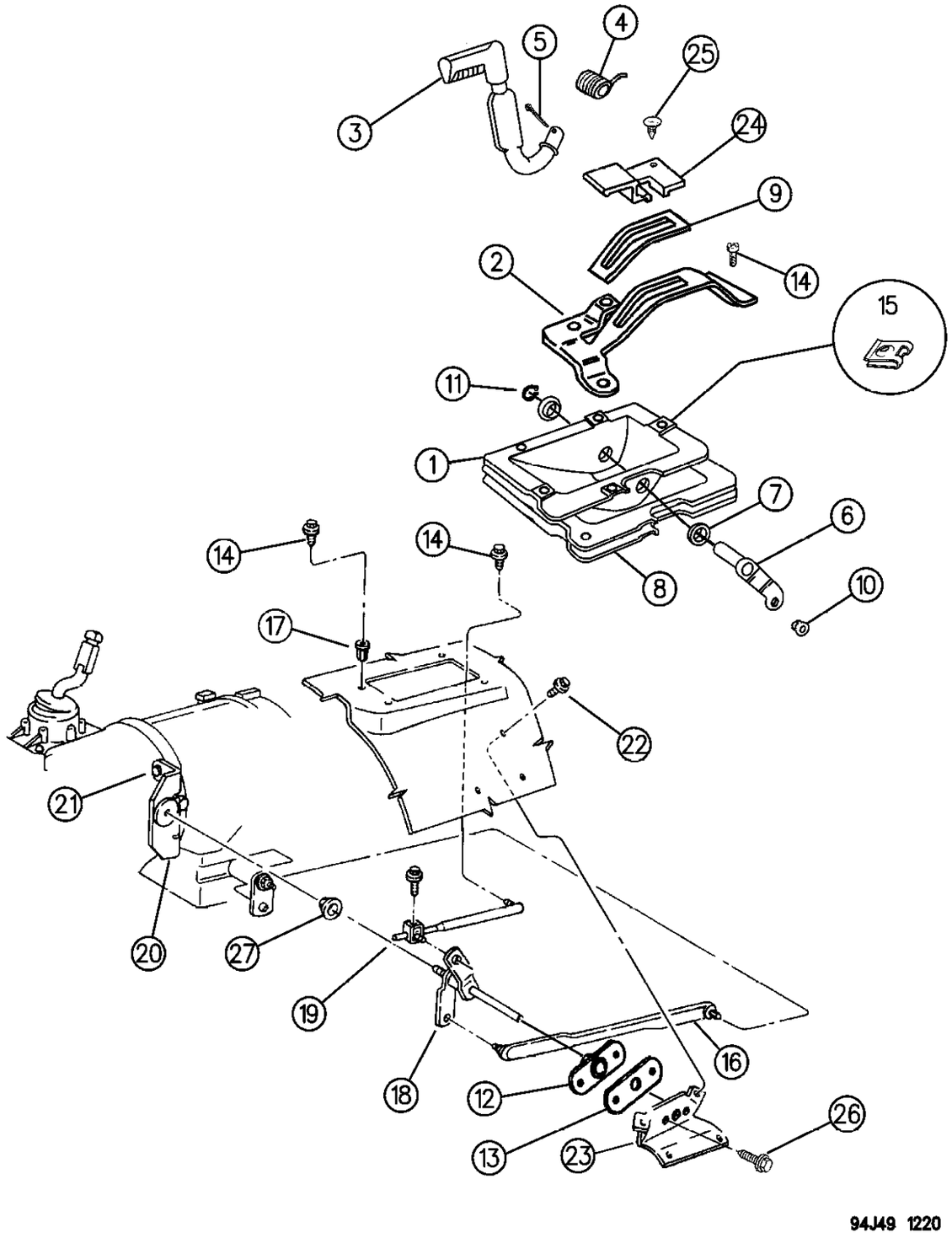

ITEM	PART NUMBER	QTY	BODY	MODEL	DESCRIPTION
1	5207 8427	1			HOUSING
2	5207 7523	1			GATE ***
	5305 4445	1		ZG	RHD, 1996
3	5207 7526	1			LEVER and HANDLE ***
	5305 4279	1		ZG	RHD, 1996
4	5207 8647	1			SPRING
5	J400 6723	1			PIN, Transfer Case
6	5207 8095	1			PIN and LEVER ***
7	5300 0639	2			BUSHING
8	5207 8059	1			GASKET
9	5207 7670	1			LINER
	5305 4446	1		ZG	RHD, 1996
10	J323 8418	1			SCREW, w/WASHER
11	1150 5389	1			RING, Retaining
12	5207 8134	1			BEARING
13	5300 5154	1			GASKET
14	3420 1277	AR			SCREW
15	1150 4118	1			RETAINER
16					ROD, Transfer Case Shift Lever
	5207 8119	1			5.2L 8 Cylinder Engine, w/46RH Automatic Transmission
	5207 8113	1			4.0L 6 Cylinder Engine, w/42RE Automatic Transmission
17	3420 2050	4			RIVET-NUT ***
18	5207 8665	1			SHAFT, Transfer Case Shaft
19	5207 8113	1			ROD, Gear Selector
20					BRACKET, Shift Lever
	5207 8106	1			w/42RE Automatic Transmission
	5207 8109	1			w/46RH Automatic Transmission
	5210 4221	1			w/44RE Automatic transmission
21	J400 6681	1			Nut, w/ WASHER ***
22	3420 2407	4			SCREW
23	5207 8022	1			BRACKET
24	5207 7667	1			SELECTOR ***
25	5207 7671	1			PUSH-PIN ***
26	6032 518	2			SCREW
27	5300 4810	1			BUSHING

MODEL CODES:

72=2 DR Wagon
74=4 DR Wagon
77=Open Body 93" Whlbase
78=Open Body 103" Whlbase - Export
T=2WD
J,N=4WD
U=4WD (RHD)

BODY STYLES:

YJ=Wrangler (4X4) "S"
Weangler (4X4) SE
Wrangler (4X4) Sahara
Wrangler (4X4) Renegade
XJ=Cherokee SE
Cherokee Sport
Cherokee Country
ZJ=Grand Cherokee SE
Grand Cherokee Laredo
Grand Cherolee Limited
ZG=Grand Cherokee European
Y1=Wrangler
X1=Cherokee
Z1=Grand Cherokee
KDX=Vehicles

AR = Use as Required - = Non Illustrated Part P.A.R. = Paint as Required

« RETURN TO GROUP INDEX

SAGIPARTS

GPOUP-21P
SPEEDOMETER PINION MANUAL & AUTOMATIC TRANSMISSION

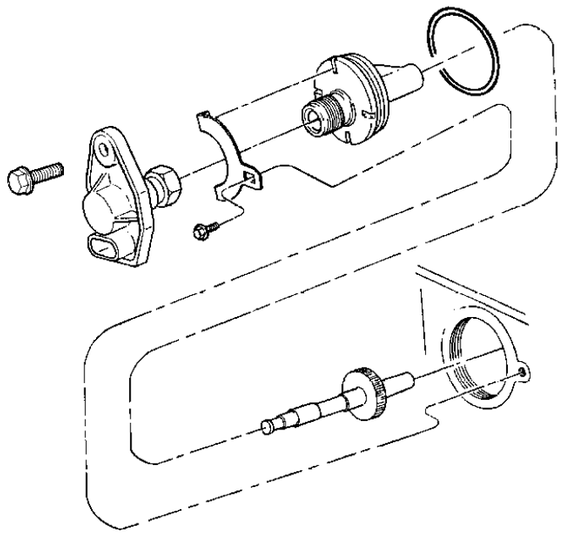

25P-100 SPEEDOMETER PINION 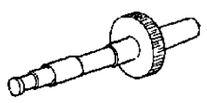			

ILLUSTRATION TITLE **GROUP-FIG. NO.**

SPEEDOMETER PINIONS AND GEAR (AUTO. AND MANUAL)

SPEEDOMETER PINION AND HOUSING XJ X1 YJ Y1 . . . . . Fig. 21P-110
SPEEDOMETER PINION ZJ - GRAND CHEROKEE . . . . . Fig. 21P-120

SPEEDOMETER PINION AND HOUSING XJ X1 YJ Y1
Figure 21P-110

21P-110

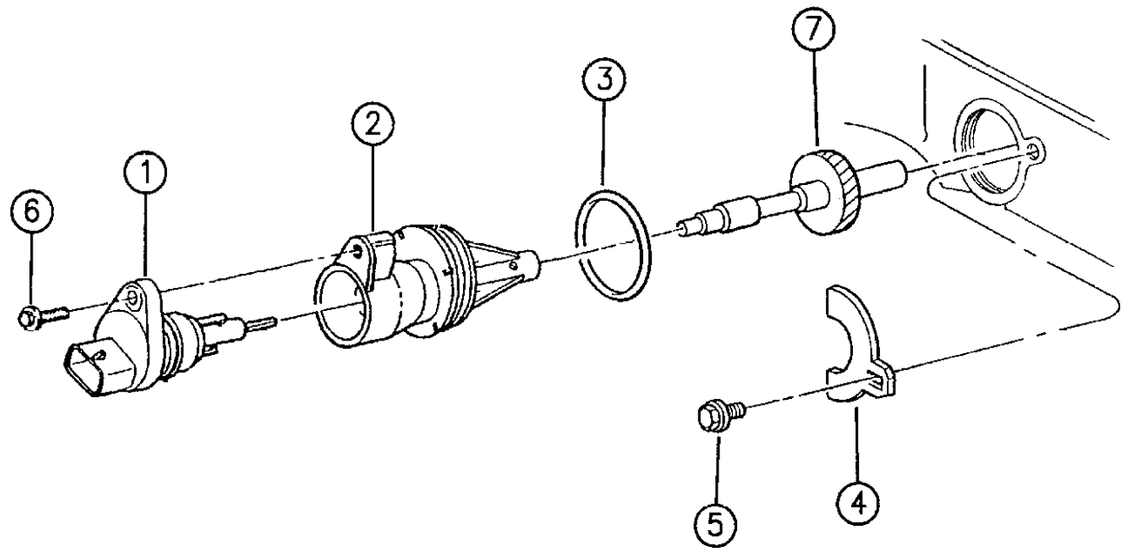

94J21 110

ITEM	PART NUMBER	QTY	BODY	MODEL	DESCRIPTION
1	5234 422	1			SENSOR, Speed
2	5206 8367	1			HOUSING
3	6025 752	1			O-RING, Housing
4	2892 399	1			CLAMP, Speed Drive Housing
5	0180 077	1			SCREW, Speed Drive
6	0153 339	1			SCREW, Speed Sensor
7					SPEEDOMETER PINION ***
					3.07 Axle Ratio ***
	5206 7629	1	YJ	29 Teeth	P225/75R15, 29x9.50R15LT
	5206 7629	1	XJ	29 Teeth	P225/75R15
	5206 7630	1	XJ	30 Teeth	All P215/75R15 & P225/70R15
	5206 7630	1	YJ	30 Teeth	All P215/75R15
	5206 7631	1	YJ	31 Teeth	P205/75R15 Goodyear
					3.50 Axle Ratio ***
	5206 7629	1	Y1	29 Teeth	7.50x16 Low Pressure Sand
	5206 7631	1	Y1	31 Teeth	7.50x16 (Sand)
	5206 7633	1	XJYJX1	33 Teeth	P225/75R15 Michelin
	5206 7633	1	YJ	33 Teeth	29x9.50R15LT
	5206 7634	1		34 Teeth	P225/75R15 Goodyear
	5206 7634	1	XJ,X1	34 Teeth	P215/75R15 OWL A/T Michelin
	5206 7634	1	YJ	34 Teeth	P215/75R15 OWL T/A, P215/75R15 RBL A/T, Michelin
	5206 7635	1	XJ,X1	35 Teeth	P215/75R15 OWL M&S Goodyear, P215/75R15 BSW A/S, P225/70R15 OWL A/S
	5206 7635	1	X1,Y1	35 Teeth	P215/75R15 OWL A/T
	5206 7635	1	X1	35 Teeth	P255/60R15 (Goodyear Eagle)
	5206 7635	1	YJ	35 Teeth	P215/75R15 OWL M&S, P215/75R15 RBL M&S
	5206 7635	1	YJ	35 Teeth	P205/75R15 BSW A/T Michelin
					3.70 Axle Ratio ***
	5206 7635	1	XJ,YJ	35 Teeth	P225/75R15 OWL A/T Michelin
	5206 7636	1	XJ,YJ	36 Teeth	P225/75R15 OWL M&S Goodyear
	5206 7636	1	Y1	36 Teeth	7.50x16 (Sand)
	5206 7637	1	XJ,YJ	37 Teeth	P215/75R15 BSW, P215/75R15 OWL M&S
	5206 7637	1	YJ	37 Teeth	P205/75R15 BSW A/T
					4.11 Axle Ratio ***
	5206 7634	1	Y1	34 Teeth	7.50x16 (Sand)
	5206 7639	1	XJ,X1	39 Teeth	P215/75R15
	5206 7639	1	YJ,Y1	39 Teeth	P225/75R15
	5206 7640	1	XJ,X1	40 Teeth	P215/75R15
	5206 7640	1	YJ,Y1	40 Teeth	P215/75R15
	5206 7641	1	XJ	41 Teeth	P225/70R15
	5206 7641	1	X1	41 Teeth	P255/60R15 (Goodyear Eagle)
	5206 7641	1	YJ	41 Teeth	P205/75R15

MODEL CODES:

72=2 DR Wagon
74=4 DR Wagon
77=Open Body 93" Whlbase
78=Open Body 103" Whlbase - Export
T=2WD
J,N=4WD
U=4WD (RHD)

BODY STYLES:

YJ=Wrangler (4X4) "S"
Weangler (4X4) SE
Wrangler (4X4) Sahara
Wrangler (4X4) Renegade
XJ=Cherokee SE
Cherokee Sport
Cherokee Country
ZJ=Grand Cherokee SE
Grand Cherokee Laredo
Grand Cherolee Limited
ZG=Grand Cherokee European
Y1=Wrangler
X1=Cherokee
Z1=Grand Cherokee
KDX=Vehicles

AR = Use as Required - = Non Illustrated Part P.A.R. = Paint as Required

SPEEDOMETER PINION ZJ - GRAND CHEROKEE
Figure 21P-120

21P-120

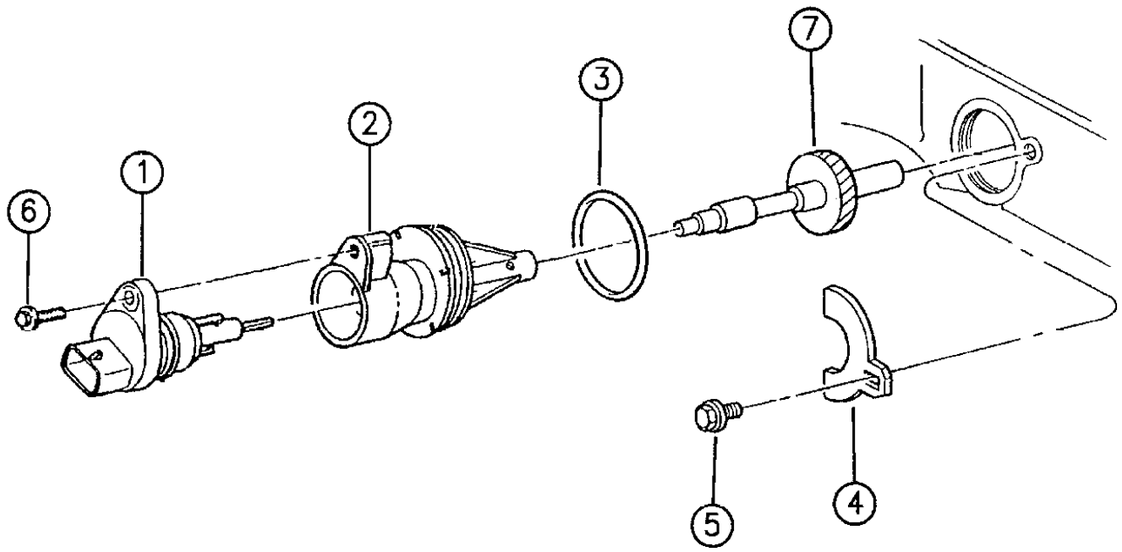

94J21 120

ITEM	PART NUMBER	QTY	BODY	MODEL	DESCRIPTION
1	5234 422	1			SENSOR, Distance
2	5206 8367	1			HOUSING
3	6025 752	1			O-RING Housing ***
4	2892 399	1			CLAMP, Speed Drive Housing
5	0180 077	1			SCREW, Speed Drive
6	0153 339	1			SCREW, Speed Sensor
7					PINION, Speedo Drive
					3.55 Axle Ratio ***
	5206 7633	1		33 Teeth	P225/75R15 Michelin Brand Tires, P235/75R15XL, P245R7015 Undirectional All Terrain
	5206 7634	1		34 Teeth	P225/75R15 Goodyear Tires, P245R7015 Undirectional All Terrain
	5206 7635	1		35 Teeth	P225/70R15 OWL, P225/60R16 OWL
					3.73 Axle Ratio ***
	5206 7635	1		35 Teeth	P225/75R15, A/S, A,T , Michelin, P245R7015 Undirectional All Terrain, P245/70R15 A/T Tire,P225/70R16OWL Eagle LS Perf Tire, P225/70R13 All Terain
	5206 7636	1		36 Teeth	P225/75R15,(OWL,Goodyear Tires), P245R7015 Undirectional All Terrain
	5206 7637	1		37 Teeth	All P225/70R15 ,P225/60R16 OWL

MODEL CODES:

72=2 DR Wagon
74=4 DR Wagon
77=Open Body 93" Whlbase
78=Open Body 103" Whlbase - Export
T=2WD
J,N=4WD
U=4WD (RHD)

BODY STYLES:

YJ=Wrangler (4X4) "S"
Weangler (4X4) SE
Wrangler (4X4) Sahara
Wrangler (4X4) Renegade
XJ=Cherokee SE
Cherokee Sport
Cherokee Country
ZJ=Grand Cherokee SE
Grand Cherokee Laredo
Grand Cherolee Limited
ZG=Grand Cherokee European
Y1=Wrangler
X1=Cherokee
Z1=Grand Cherokee
KDX=Vehicles

AR = Use as Required - = Non Illustrated Part P.A.R. = Paint as Required

SAGIPARTS

GROUP-21A
AUTOMATIC TRANSMISSION (30RH)

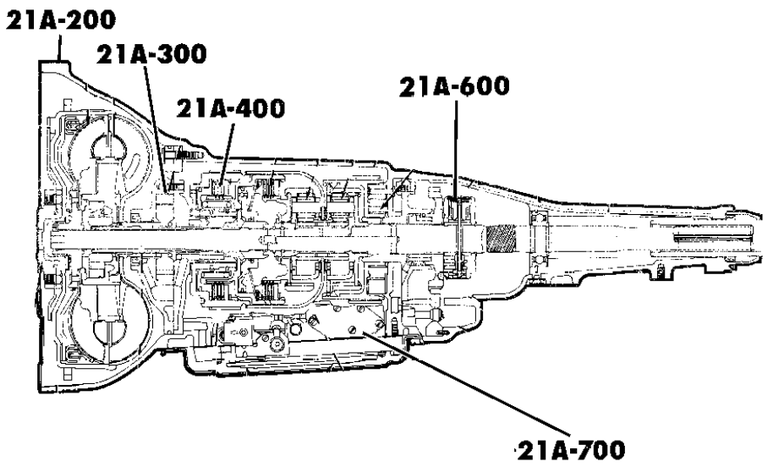

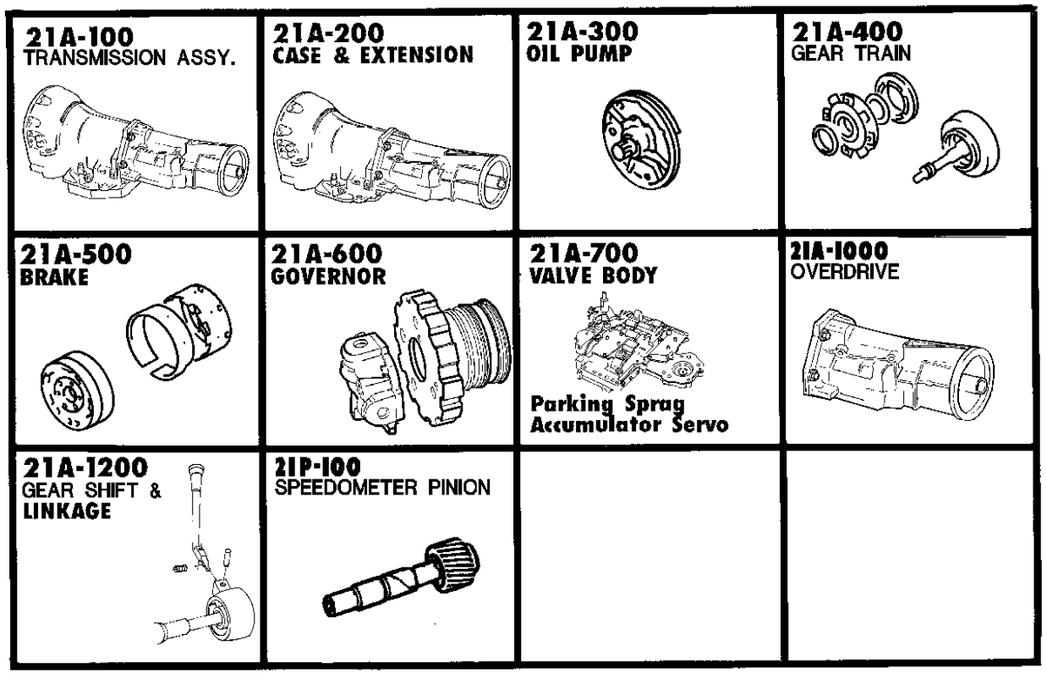

GROUP 21A - TRANS. AUTO 30RH 3 SPEED

ILLUSTRATION TITLE — **GROUP-FIG. NO.**

TRANSMISSION ASSEMBLY

TRANSMISSION ASSEMBLY AUTOMATIC TRANSMISSION, 3 SPEED, 30RH WRANGLER YJ - CHEROKEE XJ . . . . . Fig. 21A-110

CASE AND EXTENSION

CASE AND RELATED PARTS AUTOMATIC TRANSMISSION, 3 SPEED, 30RH WRANGLER YJ - CHEROKEE XJ . . . . . Fig. 21A-210

OIL PUMP

PUMP, OIL WITH REACTION SHAFT AUTOMATIC TRANSMISSION, 3 SPEED, 30RH WRANGLER YJ - CHEROKEE XJ . . . . . Fig. 21A-310

GEAR TRAIN

CLUTCH, FRONT AND REAR WITH GEAR TRAIN AUTOMATIC TRANSMISSION, 3 SPEED, 30RH WRANGLER YJ - CHEROKEE XJ . . . . . Fig. 21A-410

GEAR TRAIN AND OUTPUT SHAFT AUTOMATIC TRANSMISSION, 3 SPEED, 30RH WRANGLER YJ - CHEROKEE XJ . . . . . Fig. 21A-420

BANDS, REVERSE AND KICKDOWN

BANDS, REVERSE AND KICKDOWN WITH LINKAGE AUTOMATIC TRANSMISSION, 3 SPEED, 30RH WRANGLER YJ - CHEROKEE XJ . . . . . Fig. 21A-510

GOVERNOR

GOVERNOR AUTOMATIC TRANSMISSION, 3 SPEED, 30RH WRANGLER YJ - CHEROKEE XJ . . . . . Fig. 21A-610

VALVE BODY, SERVO AND PARKING SPRAG

VALVE BODY AUTOMATIC TRANSMISSION, 3 SPEED, 30RH WRANGLER YJ - CHEROKEE XJ . . . . . Fig. 21A-710

SERVOS, ACCUMULATOR PISTON AND SPRING AUTOMATIC TRANSMISSION, 3 SPEED, 30RH WRANGLER YJ - CHEROKEE XJ . . . . . Fig. 21A-720

PARKING SPRAG AUTOMATIC TRANSMISSION, 3 SPEED, 30RH WRANGLER YJ - CHEROKEE XJ . . . . . Fig. 21A-730

GEARSHIFT CONTROLS

CONTROLS, SHIFT, LOWER, COLUMN AUTOMATIC TRANSMISSION, 30RH WRANGLER, YJ . . . . . Fig. 21A-1210

CONTROLS, GEARSHIFT, COLUMN MOUNTED AUTOMATIC TRANSMISSION CHEROKEE XJ . . . . . Fig. 21A-1220

CONTROLS, GEARSHIFT, FLOOR MOUNTED AUTOMATIC TRANSMISSION CHEROKEE XJ . . . . . Fig. 21A-1230

TRANSMISSION ASSEMBLY AUTOMATIC TRANSMISSION, 3 SPEED, 30RH WRANGLER YJ - CHEROKEE XJ
Figure 21A-110

21A-110

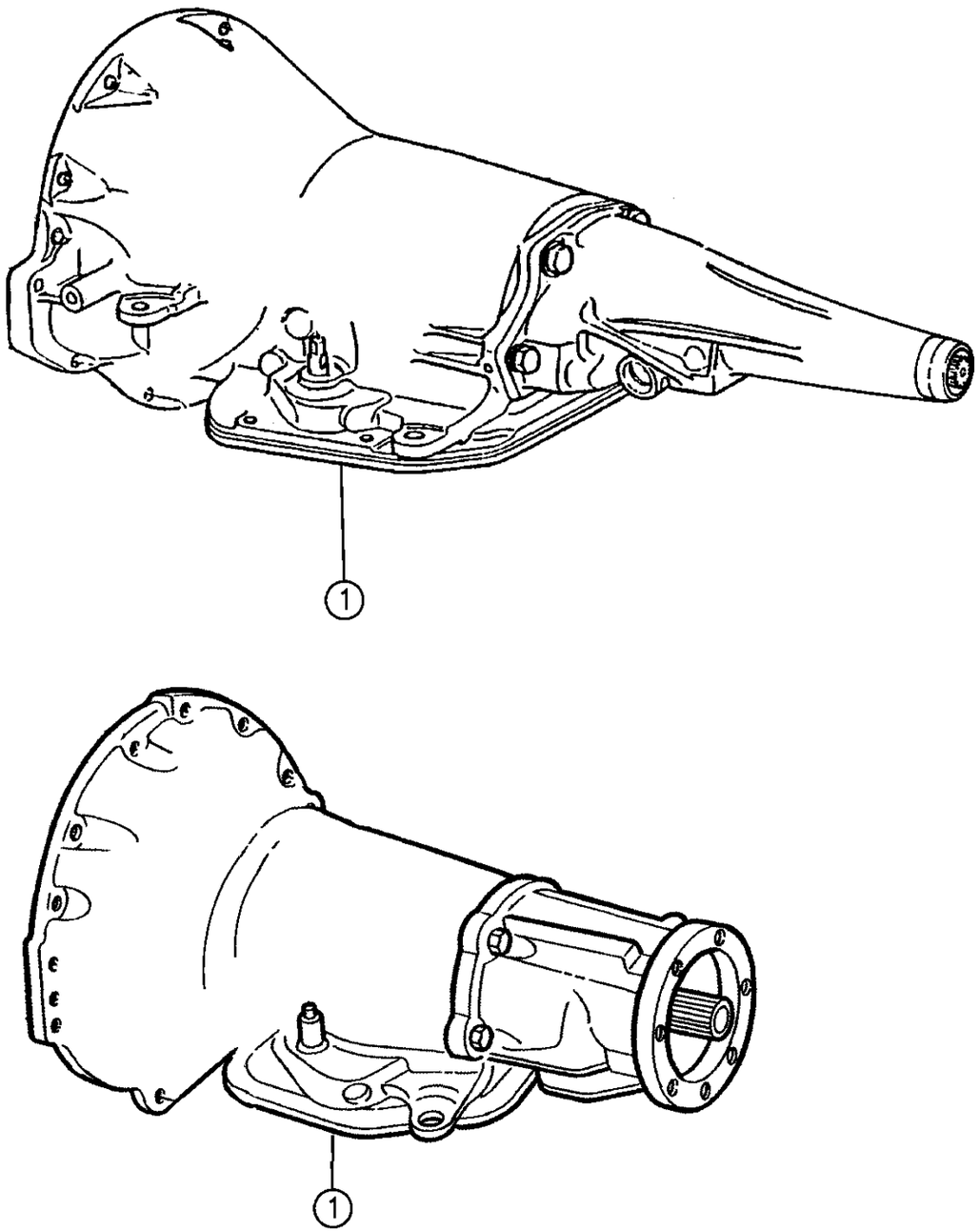

ITEM	PART NUMBER	QTY	BODY	MODEL	DESCRIPTION
					TRANSMISSION ASSEMBLY, 3 Speed Automatic, 30RH ***
1	5211 9026	1	XJ	2WD	30RH, w/2.5L Eng., w/Lock-UP
	5211 8412	1	XJ		
	5211 8025	1	YJ,XJ	4WD	30RH, w/2.5L Eng., w/Lock-UP
	5211 9107	1	YJ,XJ	4WD	30RH, w/2.5L Eng., w/Lock-UP, After 8-24-93
	5211 9168	1	YJ, XJ	4WD	
	5211 8413	1	XJ		

MODEL CODES:

72=2 DR Wagon
74=4 DR Wagon
77=Open Body 93" Whlbase
78=Open Body 103" Whlbase - Export
T=2WD
J,N=4WD
U=4WD (RHD)

BODY STYLES:

YJ=Wrangler (4X4) "S"
Weangler (4X4) SE
Wrangler (4X4) Sahara
Wrangler (4X4) Renegade
XJ=Cherokee SE
Cherokee Sport
Cherokee Country
ZJ=Grand Cherokee SE
Grand Cherokee Laredo
Grand Cherolee Limited
ZG=Grand Cherokee European
Y1=Wrangler
X1=Cherokee
Z1=Grand Cherokee
KDX=Vehicles

AR = Use as Required - = Non Illustrated Part P.A.R. = Paint as Required

« RETURN TO GROUP INDEX

CASE AND RELATED PARTS AUTOMATIC TRANSMISSION, 3 SPEED, 30RH WRANGLER YJ - CHEROKEE XJ
Figure 21A-210

21A-210

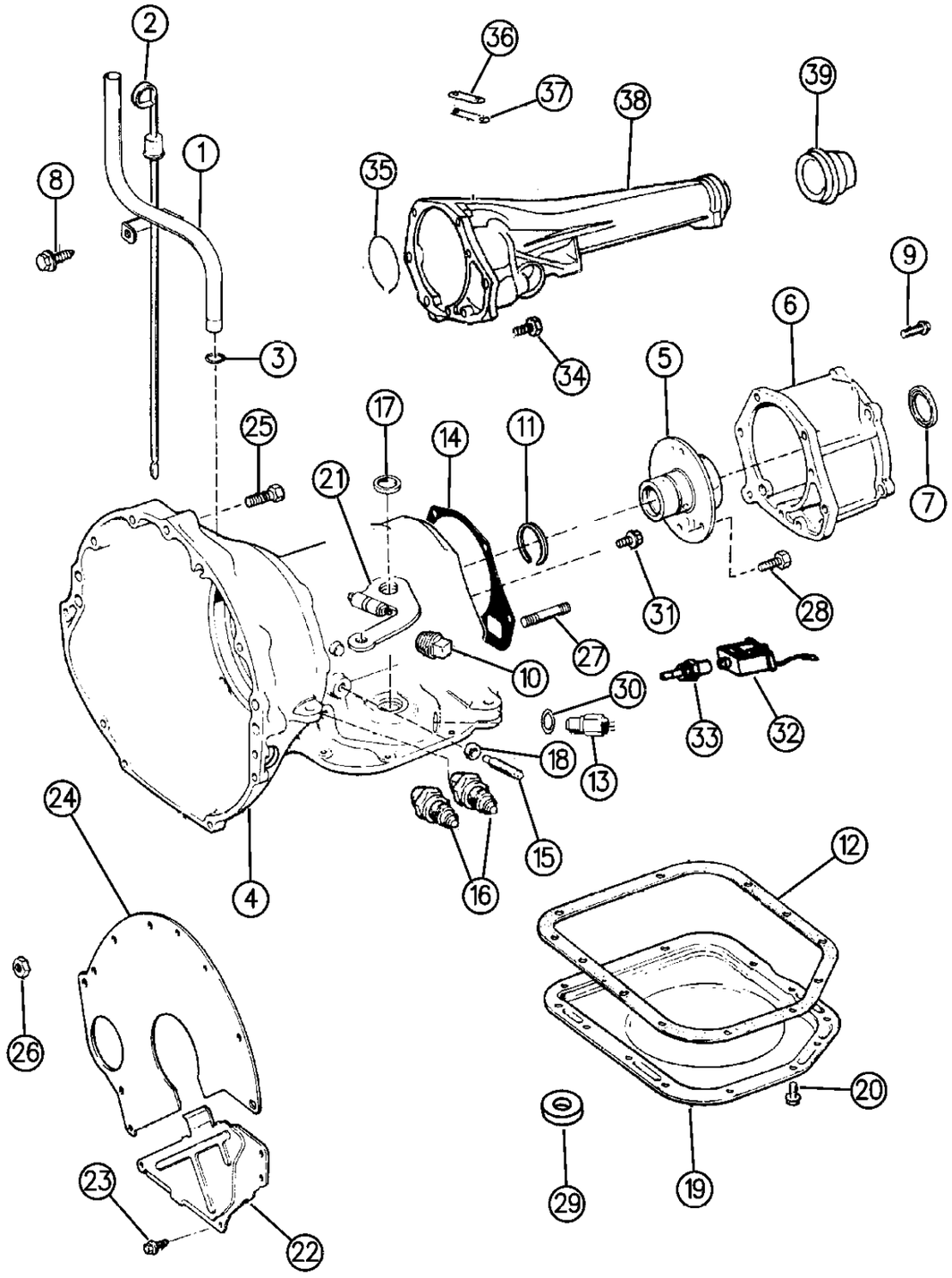

ITEM	PART NUMBER	QTY	BODY	MODEL	DESCRIPTION
1	5211 7918	1	YJ		TUBE, Oil Indicator
	5211 7917	1	XJ		
2	5300 3661	1	YJ		INDICATOR, Trans. Oil Level ***
	5211 8079	1	XJ		
3	J094 0298	1			O-RING, Oil Indicator Tube ***
4	4617 664	1			CASE, Automatic Trans. ***
5	4431 433	1			SUPPORT, Shaft 6 Hole
6	4505 236	1			ADAPTER, Automatic Trans.
7	4269 956	1			SEAL, Adapter
8	J400 1701	1			SCREW, .190-16 x 1/2"
9	6030 849	5			BOLT, 3/8-16 x 1-3/8"
10	6028 095	AR			PLUG, Pressure Check, 1/8-27 Pipe
11	6033 480	1			RING, Reverse Drum Retaining
12	4295 875	1			GASKET, Pan
13	3747 361	1			SWITCH, Neutral Starter and Back-Up Light Safety
14	2466 954	1			GASKET, Case To Adapter
15	1942 477	1			SCREW, Band Adjusting
16	4617 517	1			CONNECTOR, Oil Cooler Quick Disconnect, For 3/8" Tubing
17	4505 098	1			SEAL, Manual Valve Lever Shaft
18		1			NUT, (Not Serviced)
19	4202 005	1			PAN, Trans. Oil
20	4723 548	14			SCREW, 5/16-18 x 5/8"
21	5300 2026	1	YJ		LEVER, Shift Control
22	5300 3381	1			COVER
23	J400 0987	4			SCREW, 5/16-18 x 5/8"
24		1			SPACER, (Not Used w/2.5L Eng.)
25	J400 1885	5			BOLT, 3/8-16 x 2-1/8"
	J400 4370	2			7/16-14 x 2-3/4"
	6502 505	1			M12x1.75x90
26	J021 9422	2			NUT, 3/8-16
27	6033 157	1			STUD, Adapter to Case
28	6033 479	6			BOLT, 1/4-28 x 1-5/8"
29	3681 601	1			MAGNET, Chip Collector ***
30	2408 143	1			WASHER, B/U Light Switch
31	6033 616	5			SCREW, 1/4-28 x 7/8"
32	4348 719	1			SOLENOID, Trans. Unlock ***
33	4348 945	1			CONNECTOR, Solenoid Unlock wiring
34	6029 531	6		2WD	SCREW, Extension, 3/8-16 x 1-1/8"
35	2400 185	1		2WD	SNAP RING, Ext. Bearing Outer
36	2466 957	1		2WD	COVER, O/Put Shaft Bearing
	6028 022	2		2WD	SCREW, Cover 1/4-20 x 5/8
37	2801 398	1		2WD	GASKET, O/Put Shaft Brg. Cover

MODEL CODES:

72=2 DR Wagon
74=4 DR Wagon
77=Open Body 93" Whlbase
78=Open Body 103" Whlbase - Export
T=2WD
J,N=4WD
U=4WD (RHD)

BODY STYLES:

YJ=Wrangler (4X4) "S"
Weangler (4X4) SE
Wrangler (4X4) Sahara
Wrangler (4X4) Renegade
XJ=Cherokee SE
Cherokee Sport
Cherokee Country
ZJ=Grand Cherokee SE
Grand Cherokee Laredo
Grand Cherolee Limited
ZG=Grand Cherokee European
Y1=Wrangler
X1=Cherokee
Z1=Grand Cherokee
KDX=Vehicles

AR = Use as Required - = Non Illustrated Part P.A.R. = Paint as Required

CASE AND RELATED PARTS AUTOMATIC TRANSMISSION, 3 SPEED, 30RH WRANGLER YJ - CHEROKEE XJ
Figure 21A-210

21A-210

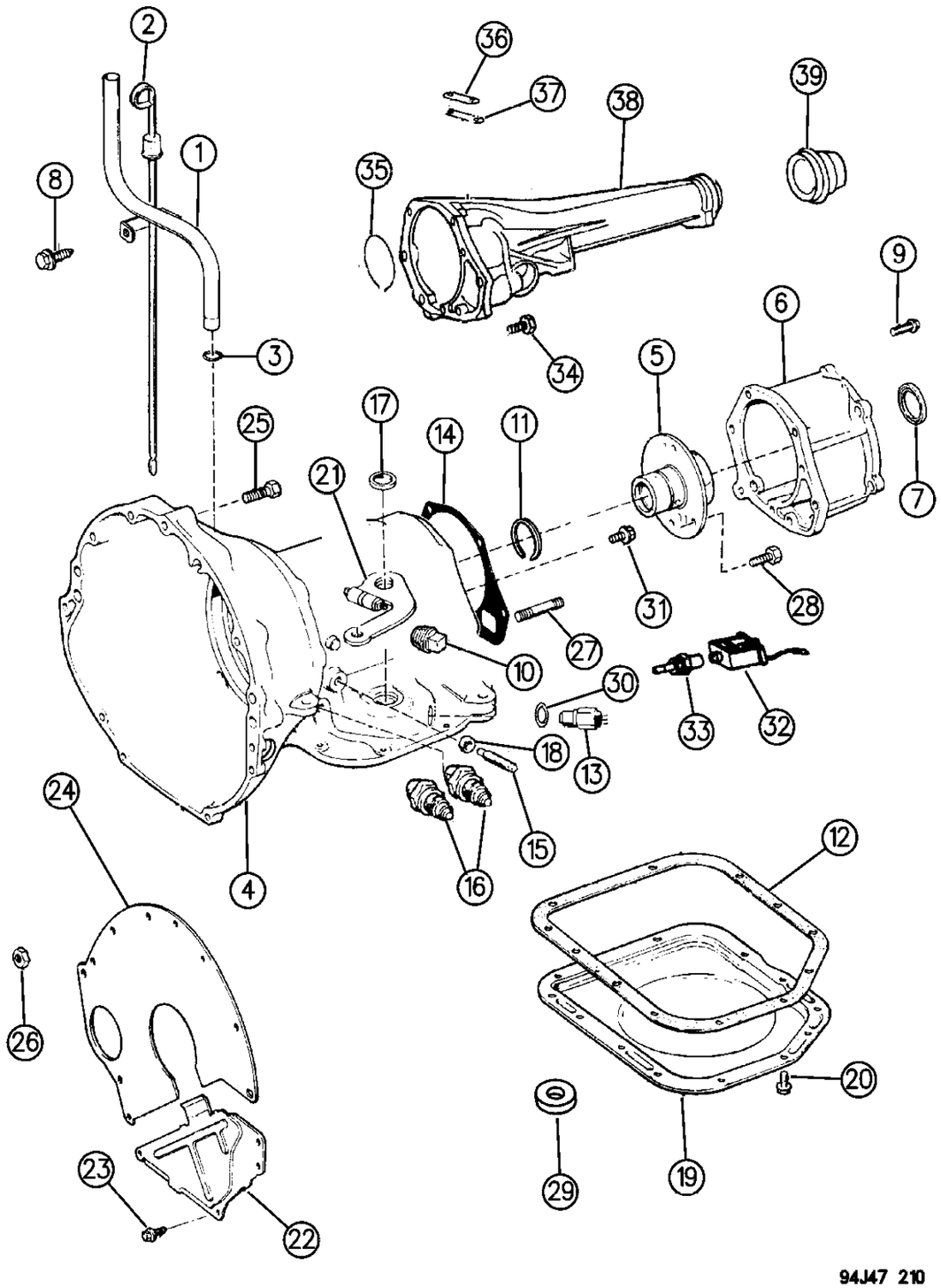

ITEM	PART NUMBER	QTY	BODY	MODEL	DESCRIPTION
38	4505 230	1		2WD	EXTENSION, Trans. Case
39	4058 047	1		2WD	OIL SEAL, Extension ***

MODEL CODES:

72=2 DR Wagon
74=4 DR Wagon
77=Open Body 93" Whlbase
78=Open Body 103" Whlbase - Export
T=2WD
J,N=4WD
U=4WD (RHD)

BODY STYLES:

YJ=Wrangler (4X4) "S"
Weangler (4X4) SE
Wrangler (4X4) Sahara
Wrangler (4X4) Renegade
XJ=Cherokee SE
Cherokee Sport
Cherokee Country
ZJ=Grand Cherokee SE
Grand Cherokee Laredo
Grand Cherolee Limited
ZG=Grand Cherokee European
Y1=Wrangler
X1=Cherokee
Z1=Grand Cherokee
KDX=Vehicles

AR = Use as Required - = Non Illustrated Part P.A.R. = Paint as Required

PUMP, OIL WITH REACTION SHAFT AUTOMATIC TRANSMISSION, 3 SPEED, 30RH WRANGLER YJ - CHEROKEE XJ
Figure 21A-310

21A-310

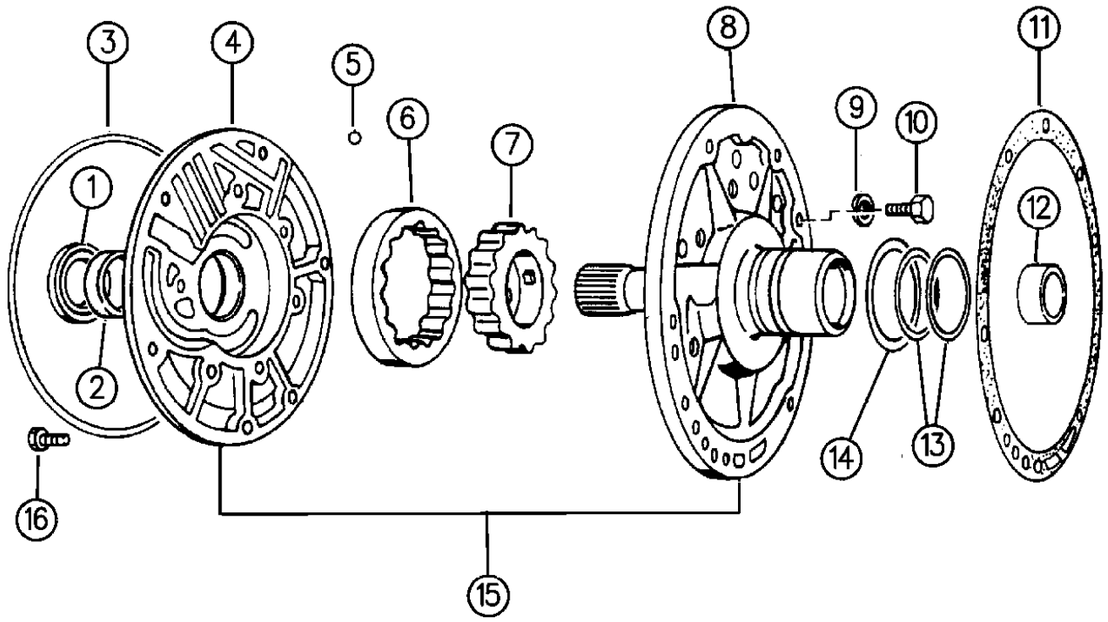

94J47 310

ITEM	PART NUMBER	QTY	BODY	MODEL	DESCRIPTION
	4713 108	1			GASKET and SEAL PACKAGE, Frt. Pump ***
					Consists Of:
					1 - 4412475 SEAL, T/C Impeller Hub
					1 - 2204709 SEAL, Oil Pump
					1 - 4617840 GASKET, T/C Reaction Shaft Support
					2 - 4471874 SEAL RING, Reaction Shaft Support
					2 - 1401221 SEAL RING, Input Shaft Frt.
					1 - 4028333 SEAL RING, Rr. Clutch Retainer
					1 - K685-2070 Instruction Sheet
1	4412 475	1			SEAL, T/C Impeller Hub, 57.25mm O.D.
2	2466 796	1			BUSHING, Frt. Pump Hsg.
3	2204 709	1			SEAL, Frt. Pump Hsg. 8-17/64" O.D.
4		1			HOUSING, w/Bushing, Rotors Frt. Pump (Serviced in Pump Assy.)
5	0104 918	AR			BALL, Suppt., 1/4" Dia.
		AR			Support, Small 9/32" (Not Serviced)
6		1			ROTOR, (Serviced in Assy.) ***
7		1			ROTOR, (Serviced in Assy.) ***
8		1			SHAFT, w/Support, Reaction (Serviced in Pump Assy.)
9		6			LOCK WASHER, (Not Serviced) ***
10	0179 815	6			SCREW, Support, 5/16"-18 x 11/16"
11	4617 840	1			GASKET, Reaction Shaft Support
12	4058 635	1			BUSHING, Shaft, .968" O.D.
13	4471 874	2			SEAL RING, Reaction Shaft Support 2-1/16 I.D. ***
14	4617 786	2			WASHER, Frt. Clutch Thrust, 2-5/8" O.D.
15	4740 268	1			PUMP ASSEMBLY, Oil, w/Support and Reaction Shaft, w/Lock-Up Torque Converter ***
	4773 241	1			w/52119106,9107 Trans.
	4778 552	1			w/52119168
16	6023 943	6			SCREW, w/Washer, Hsg. 5/16-18 x 1-3/8"

MODEL CODES:

72=2 DR Wagon
74=4 DR Wagon
77=Open Body 93" Whlbase
78=Open Body 103" Whlbase - Export
T=2WD
J,N=4WD
U=4WD (RHD)

BODY STYLES:

YJ=Wrangler (4X4) "S"
Weangler (4X4) SE
Wrangler (4X4) Sahara
Wrangler (4X4) Renegade

XJ=Cherokee SE
Cherokee Sport
Cherokee Country

ZJ=Grand Cherokee SE
Grand Cherokee Laredo
Grand Cherolee Limited
ZG=Grand Cherokee European

Y1=Wrangler
X1=Cherokee
Z1=Grand Cherokee
KDX=Vehicles

AR = Use as Required - = Non Illustrated Part P.A.R. = Paint as Required

« RETURN TO GROUP INDEX

UTCH, FRONT AND REAR WITH GEAR TRAIN AUTOMATIC TRANSMISSION, 3 SPEED, 30RH WRANGLER YJ - CHEROKEE XJ
Figure 21A-410

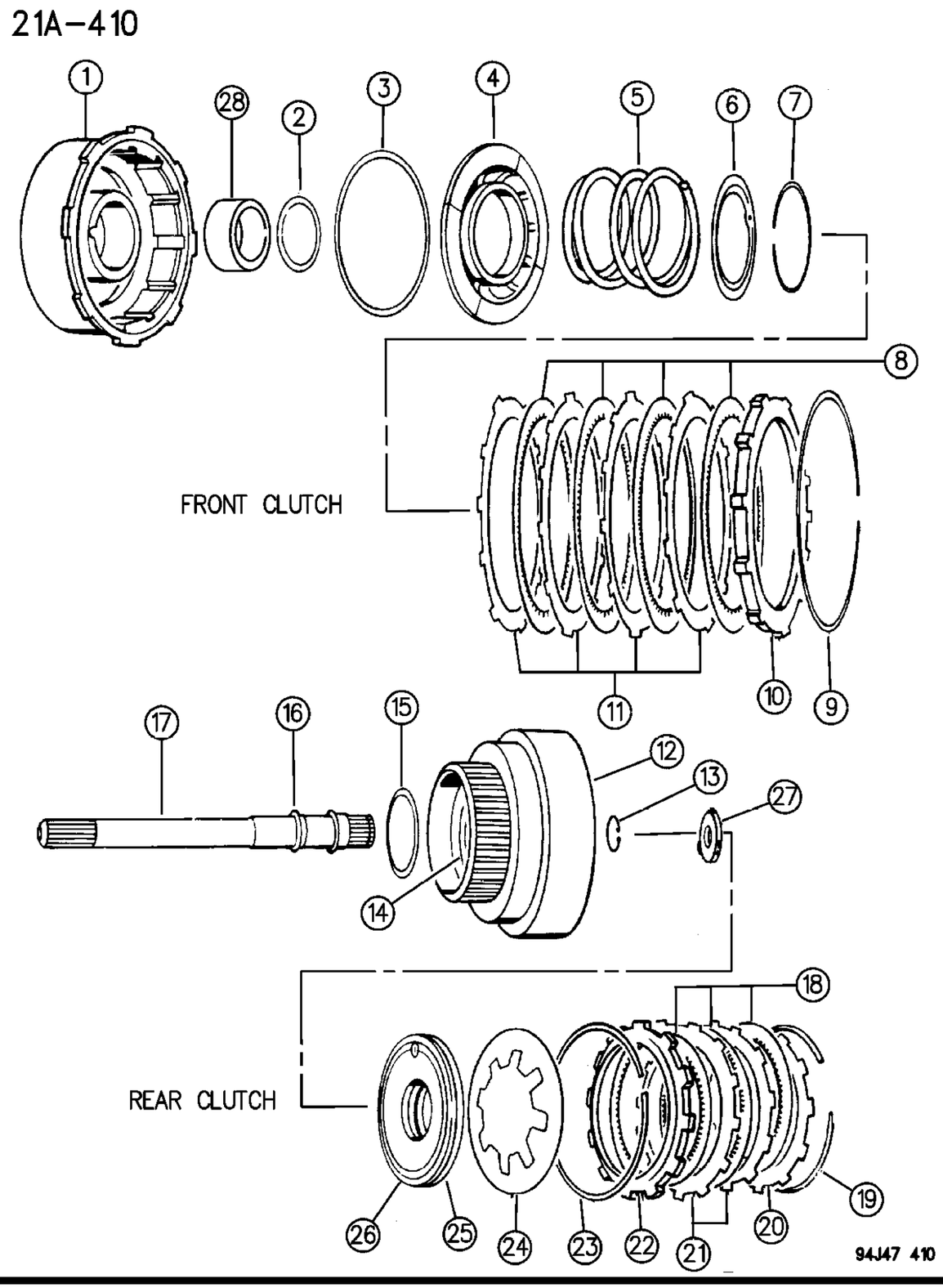

ITEM	PART NUMBER	QTY	BODY	MODEL	DESCRIPTION
	5252 926	1			SEAL and WASHER PACKAGE, Front and Rear Clutch ***
					Consists Of:
					1 - 3515176 SEAL, Frt. Clutch Piston, Inner
					1 - 4058487 SEAL, Frt. Clutch Piston, Outer
					1 - 2538510 SEAL, Rear Clutch Piston, Inner
					1 - 2538695 SEAL, Rear Clutch Piston, Outer
					1 - 4505185 WASHER, Output Shaft Thrust
					1 - 4505186 WASHER, Output Shaft Thrust
					1 - 4505187 WASHER, Output Shaft Thrust
1	4531 285	1			RETAINER, w/o Seals, Frt. Clutch
2	3515 176	1			SEAL, Frt. Clutch Piston, Rubber, Inner
3	4058 487	1			SEAL, Frt. Clutch Piston, Outer
4	4617 154	1			PISTON, Frt. Clutch
	0147 483	1			BALL, 3/16" Dia.
5	3515 054	1			SPRING, Frt. Clutch Piston
6	4617 516	1			RETAINER, Frt. Clutch Piston Spring
	0147 483	1			BALL, Check Valve 3/16"
7	1942 400	1			SNAP RING, Frt. Clutch 2-7/16" O.D., 060" Thk., Inner
8	4617 362	4			DISC, Frt. Clutch
9	3410 571	1			SNAP RING, Frt. Clutch, Outer
10	4617 176	1			PLATE, Frt. Clutch Pressure
11	1942 403	4			PLATE, Frt. Clutch
12	4505 195	1			RETAINER, Rear Clutch
	0147 483	1			BALL, Check Valve 3/16"
13	6022 859	1			SNAP RING, Input Shaft 57/64", .059" Thk.
14	4028 333	1			SEAL, Rr. Clutch Retainer Ring, 1-1/2" O.D., .09" Thk.
15	4617 786	2			WASHER, Frt. Clutch Thrust 2-5/8" O.D.
16	1401 221	1			SEAL RING, Input Shaft, Front
	1401 221	1			Rear
17		1			SHAFT, Input (Serviced in Item #12)
18	4713 880	3			DISC, Rear Clutch ***
19					SNAP RING, Rr. Clutch Retainer 5-11/32" O.D.
	4130 761	AR			.060" Thk.
	4539 121	AR			.076" Thk.
	4539 122	AR			.098" Thk.
	4539 123	AR			.095" Thick
	4539 124	AR			.107" Thick
20	4617 176	1			PLATE, Rr. Clutch Pressure, Rear
21	1942 403	2			PLATE, Rear Clutch
22	2466 281	1			PLATE, Rr. Clutch Pressure, Front
23	2466 283	1			SPRING, Rr. Clutch Wave
24	4728 487	1			SPRING, Rr. Clutch Piston

MODEL CODES:

72=2 DR Wagon
74=4 DR Wagon
77=Open Body 93" Whlbase
78=Open Body 103" Whlbase - Export
T=2WD
J,N=4WD
U=4WD (RHD)

BODY STYLES:

YJ=Wrangler (4X4) "S"
Weangler (4X4) SE
Wrangler (4X4) Sahara
Wrangler (4X4) Renegade
XJ=Cherokee SE
Cherokee Sport
Cherokee Country
ZJ=Grand Cherokee SE
Grand Cherokee Laredo
Grand Cherolee Limited
ZG=Grand Cherokee European
Y1=Wrangler
X1=Cherokee
Z1=Grand Cherokee
KDX=Vehicles

AR = Use as Required - = Non Illustrated Part P.A.R. = Paint as Required

UTCH, FRONT AND REAR WITH GEAR TRAIN AUTOMATIC TRANSMISSION, 3 SPEED, 30RH WRANGLER YJ - CHEROKEE XJ
Figure 21A-410

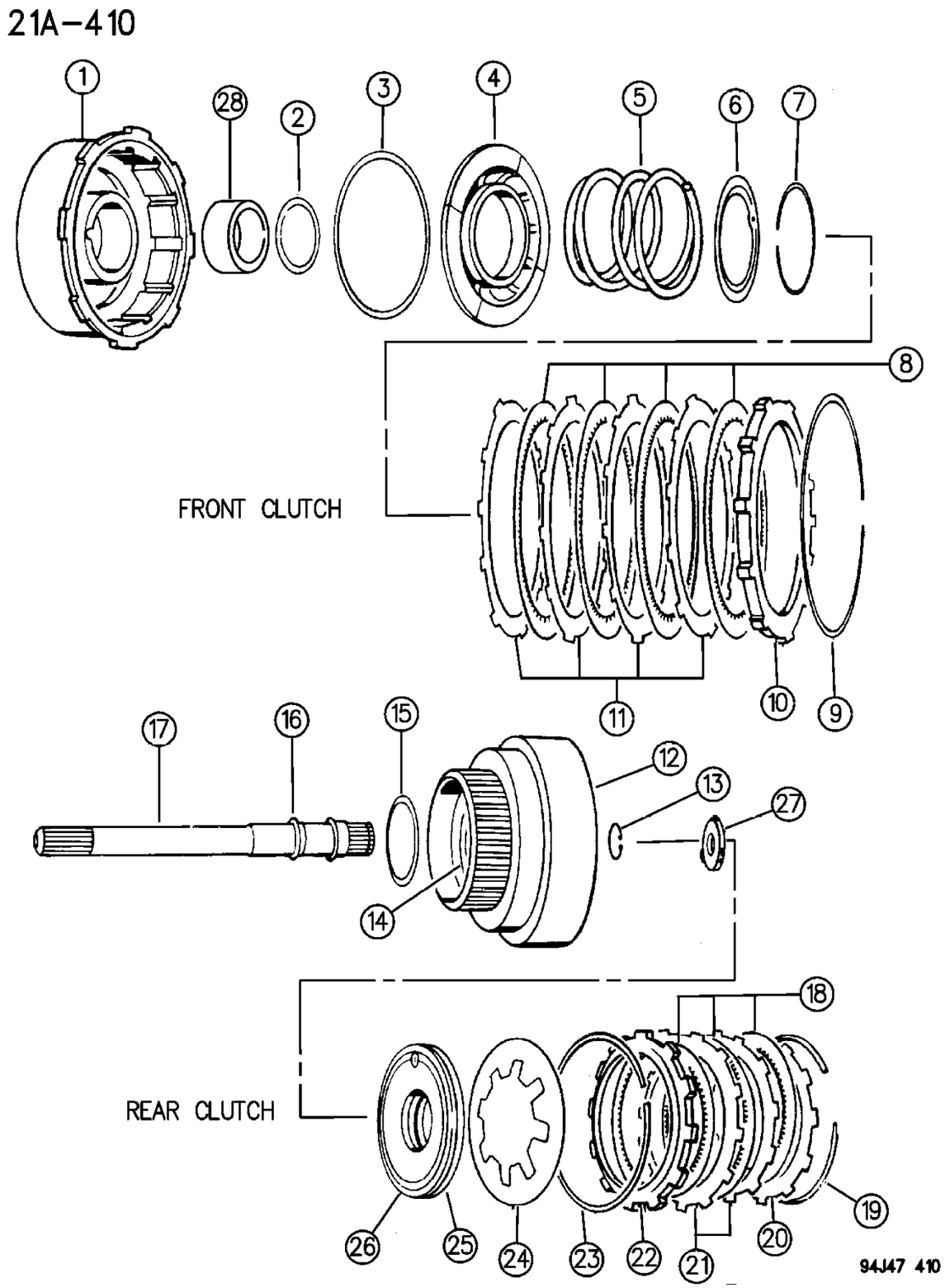

ITEM	PART NUMBER	QTY	BODY	MODEL	DESCRIPTION
25	2538 695	1			SEAL, Rr. Clutch Piston, Rubber, Outer
	2538 510	1			Rr. Clutch Piston, Rubber, Inner
26	3515 716	1			PISTON, Rr. Clutch
27					WASHER, Output Shaft Thrust, w/3 Point Bronze Face
	4505 185	AR			.052" Thk., Gray
	4505 186	AR			.068" Thk., Red
	4505 187	AR			.083" Thk., Green
28	4617 157	1			BUSHING, Frt. Clutch Retainer, Front
	4617 159	1			Rear

MODEL CODES:

72=2 DR Wagon
74=4 DR Wagon
77=Open Body 93" Whlbase
78=Open Body 103" Whlbase - Export
T=2WD
J,N=4WD
U=4WD (RHD)

BODY STYLES:

YJ=Wrangler (4X4) "S"
Weangler (4X4) SE
Wrangler (4X4) Sahara
Wrangler (4X4) Renegade

XJ=Cherokee SE
Cherokee Sport
Cherokee Country

ZJ=Grand Cherokee SE
Grand Cherokee Laredo
Grand Cherolee Limited
ZG=Grand Cherokee European

Y1=Wrangler
X1=Cherokee
Z1=Grand Cherokee
KDX=Vehicles

AR = Use as Required - = Non Illustrated Part P.A.R. = Paint as Required

GEAR TRAIN AND OUTPUT SHAFT AUTOMATIC TRANSMISSION, 3 SPEED, 30RH WRANGLER YJ - CHEROKEE XJ
Figure 21A-420

21A-420A

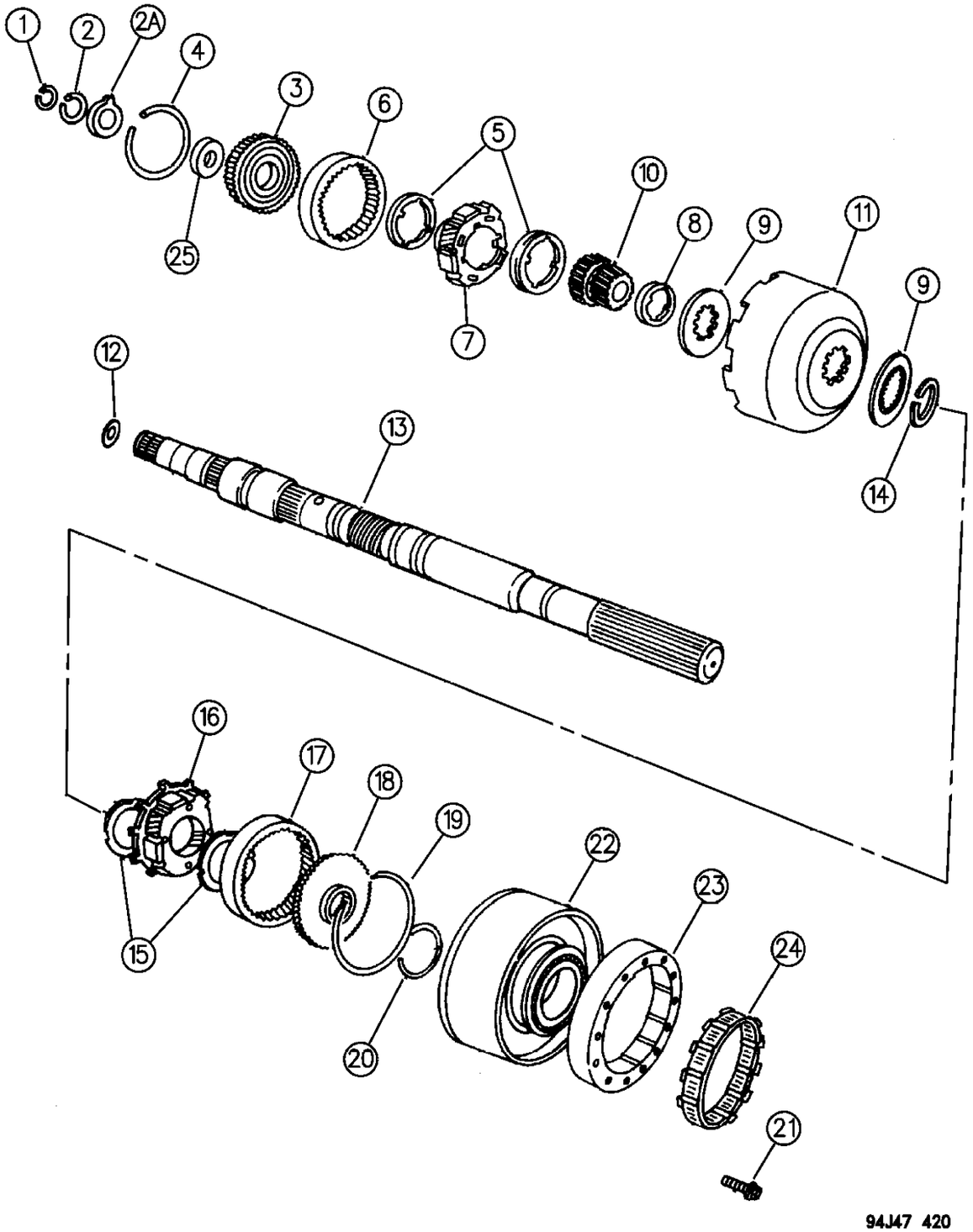

ITEM	PART NUMBER	QTY	BODY	MODEL	DESCRIPTION
1	6026 289	AR			SNAP RING, Output Shaft, .946" I.D., .040" Thk.
	6030 938	AR			.910" I.D., .062" Thk., Green
	6030 404	AR			.906" I.D., .084" Thk., White
2	6030 576	1			SNAP RING, Frt. Annulus Gear Support, 1-3/8" I.D.
2A	3681 969	1			WASHER, Frt. Annulus Gear Support, Thrust w/Lip, Steel Backed Bronze 2-1/8" O.D.
3	4617 774	1			SUPPORT, w/Bushing, Frt. Annulus Gear
4	4130 513	1			SNAP RING, Front Annulus Gear, 4-5/8" O.D.
5	4130 518	2			WASHER, Front Carrier Thrust, 2-5/8" I.D., w/4 Tabs I.D.
6	4130 512	1			GEAR, Front Annulus
7	4130 514	1			CARRIER ASSEMBLY, Front Planet Pinion
	3681 949	AR			RING, Frt. and Rr. Planet Pinion Roller Thrust
8	4130 736	1			SPACER, Sun Gear, 4 Inner Teeth, 2" O.D.
9	4471 566	2			PLATE, Sun Gear Driving Shell, Thrust
10	4130 685	1			GEAR, w/Bushing, Sun 38T-28T
11	4531 288	1			SHELL, Sun Gear Driving
12	4505 188	1			Plate, Output Shaft Thrust, Flat 1-3/8" Dia., .060" Thick ***
13	4617 318	1		2WD	SHAFT, w/Plug, Output
	4617 320	1		4WD	
14	1942 439	1			LOCK RING, Sun Gear Driving Shell, 1-41/64" O.D.
15	3681 935	2			WASHER, Rr. Planet Pinion Carrier Thrust, 2" I.D., w/4 Tabs, O.D.
16	4431 438	1			CARRIER ASSEMBLY, Rear Planet Pinion
17	3743 184	1			GEAR, Rear Annulus
18	3515 501	1			SUPPORT, Rr. Annulus Gear, 62T, 28T, 4" O.D.
19	1942 444	1			SNAP RING, Rr. Annulus Gear, 4-1/16" O.D.
20	6033 480	1			RING, Reverse Drum Retaining
21	6033 616	6			SCREW, Cam to Case, 1/4-28 x 7/8"
22	4637 956	1			DRUM, Reverse
23	4431 690	1			CAM, "O" Running Clutch ***
24	4431 432	1			CLUTCH ASSEMBLY, "O" Running, w/12 Rollers, Springs and Retainer
25	4617 775	1			PLATE, Frt. Annulus Gear Support Thrust, 2.168" O.D., 1.515" I.D., .030" Thk.

MODEL CODES:

72=2 DR Wagon	77=Open Body 93" Whlbase	T=2WD	U=4WD (RHD)
74=4 DR Wagon	78=Open Body 103" Whlbase - Export	J,N=4WD	

BODY STYLES:

YJ=Wrangler (4X4) "S"	XJ=Cherokee SE	ZJ=Grand Cherokee SE	Y1=Wrangler
Weangler (4X4) SE	Cherokee Sport	Grand Cherokee Laredo	X1=Cherokee
Wrangler (4X4) Sahara	Cherokee Country	Grand Cherolee Limited	Z1=Grand Cherokee
Wrangler (4X4) Renegade		ZG=Grand Cherokee European	KDX=Vehicles

AR = Use as Required - = Non Illustrated Part P.A.R. = Paint as Required

« RETURN TO GROUP INDEX

DS, REVERSE AND KICKDOWN WITH LINKAGE AUTOMATIC TRANSMISSION, 3 SPEED, 30RH WRANGLER YJ - CHEROKEE XJ
Figure 21A-510

21A-510

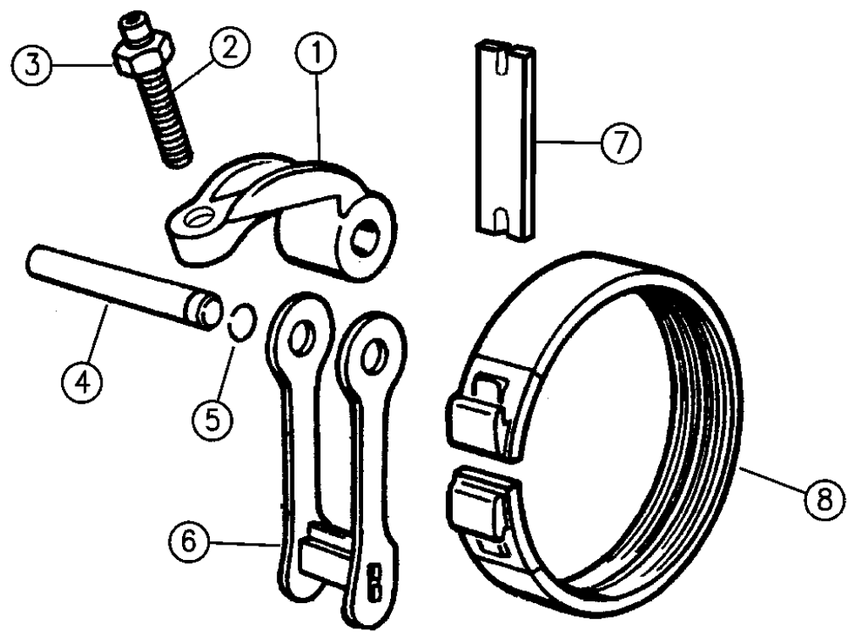

REVERSE BAND

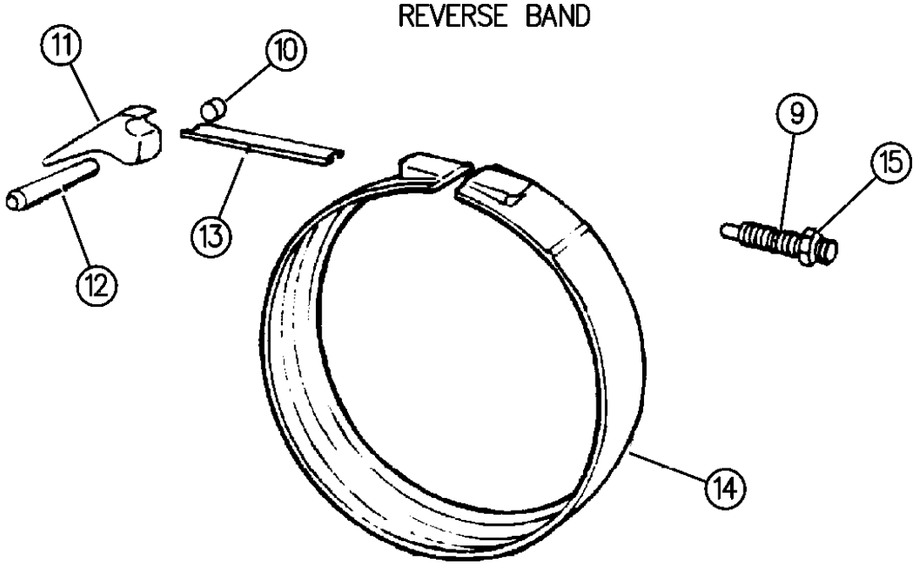

KICKDOWN BAND

94J47 510

ITEM	PART NUMBER	QTY	BODY	MODEL	DESCRIPTION
1	3681 139	1			LEVER, Reverse Band
2	6030 704	1			SCREW, Rev. Band Adjusting, 7/16-20 x 1-13/16"
3	0271 506	1			NUT, Adj. Screw Lock, 7/16-20
4	3410 102	1			SHAFT, Rev. Band Lever
5	6030 657	2			SEAL, Rev. Band Lever Shaft
6	2464 439	1			LINK, Reverse Band
7	3515 589	1			STRUT, Reverse Band ***
8	4431 405	1			BAND, Reverse Drum
9	1942 477	1			SCREW, Kickdown Band Adj., 1/2-20 x 2-7/8"
10		1			PLUG, Shaft Lever (Not Serviced)
11	2125 067	1			LEVER, Kickdown Band (3.8 Ratio Stamped)
12	4531 181	1			SHAFT, Kickdown Lever
13	3515 084	1			STRUT, Kickdown Band ***
14	4617 849	1			BAND, Kickdown
15	0124 934	1			LOCK NUT, Kickdown Band Adj. Screw, 1/2-20

MODEL CODES:

72=2 DR Wagon
74=4 DR Wagon
77=Open Body 93" Whlbase
78=Open Body 103" Whlbase - Export
T=2WD
J,N=4WD
U=4WD (RHD)

BODY STYLES:

YJ=Wrangler (4X4) "S"
Weangler (4X4) SE
Wrangler (4X4) Sahara
Wrangler (4X4) Renegade
XJ=Cherokee SE
Cherokee Sport
Cherokee Country
ZJ=Grand Cherokee SE
Grand Cherokee Laredo
Grand Cherolee Limited
ZG=Grand Cherokee European
Y1=Wrangler
X1=Cherokee
Z1=Grand Cherokee
KDX=Vehicles

AR = Use as Required - = Non Illustrated Part P.A.R. = Paint as Required

GOVERNOR AUTOMATIC TRANSMISSION, 3 SPEED, 30RH WRANGLER YJ - CHEROKEE XJ
Figure 21A-610

21A-610

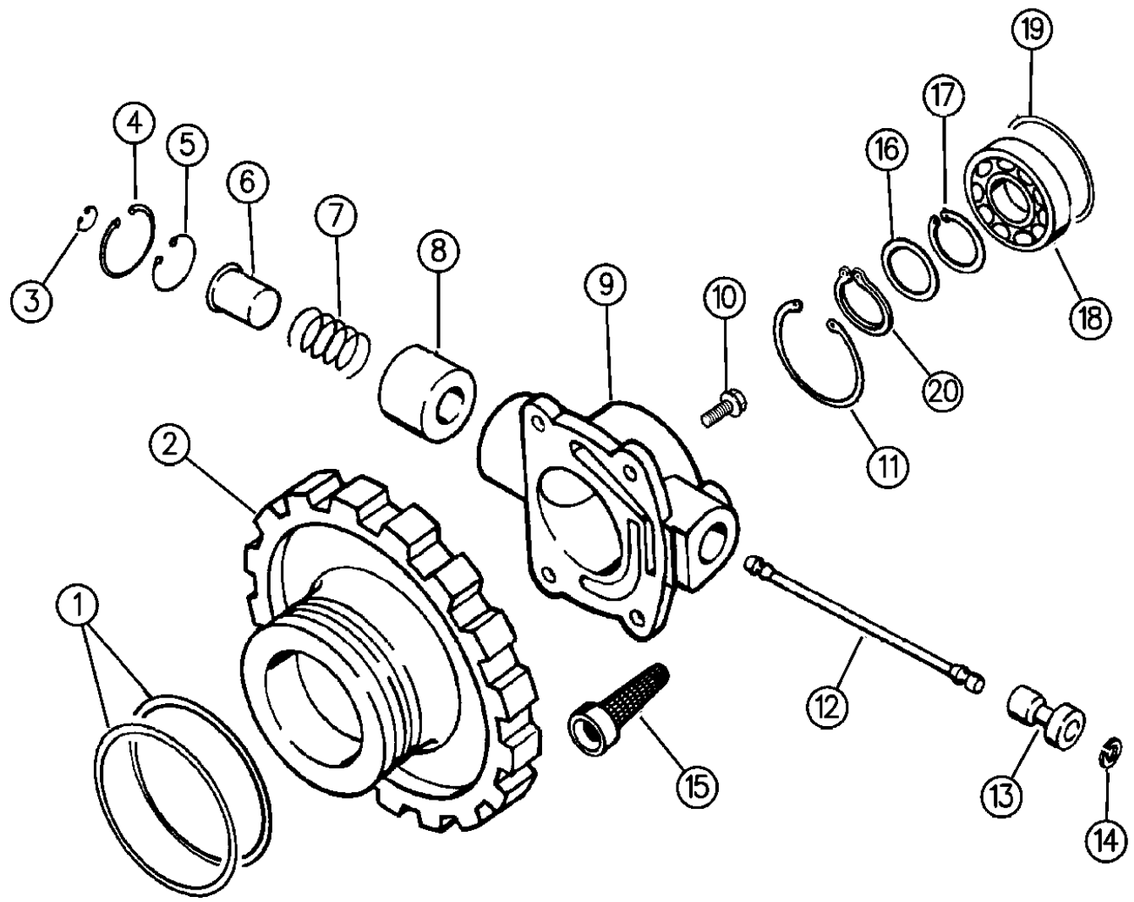

94J47 610

ITEM	PART NUMBER	QTY	BODY	MODEL	DESCRIPTION
	4728 460	1			BODY PACKAGE, Governor ***
					Consists Of:
					1 - 4617813 BODY, Governor
					1 - 1556082 SHAFT, Gov. Valve
					2 - 1638461 SNAP RING, Valve Shaft
					1 - 6031392 SNAP RING, Weight, Outer
					1 - 4617597 RETAINER, Gov. Wt.
					2 - 1942109 SEAL RING, Gov. Support
					1 - 4617064 VALVE, Governor
					1 - 3743519 FILTER, Governor
					4 - 6031613 BOLT, Gov. Body
					1 - 2801398 GASKET, O/P Shaft Brg. Cover
	4106 556	1			GASKET and SEAL PACKAGE, Governor ***
					Consists Of:
					1 - 3743519 FILTER, Governor
					1 - 4058047 SEAL, Yoke (Small)
					1 - 2466954 GASKET, Ext.
					1 - 2801398 GSKT., O/P Shaft Brg. Cover
					1 - 6030608 SEAL, Oil Filler Tube
					2 - 1942109 SEAL RING, Gov. Supt.
	5211 7938	1			WEIGHT PACKAGE, Governor (4800RPM) ***
					Consists Of:
					1 - 4617513 WEIGHT, Inner
					1 - 52117939 WEIGHT, Outer
					1 - 4617515 SPRING, Weight
					1 - 6034723 SNAP RING, Inner Weight
1	1942 109	2			RING, Governor Support Seal, Frt. & Rr.
2	3743 518	1			SUPPORT, Governor
3	1638 461	2			SNAP RING, Governor Valve Shaft
4	6034 765	1			SNAP RING, Governor Weight, Outer
5	6034 723	1			SNAP RING, Governor Weight, Inner
6		1			WEIGHT, Gov., Inner (Serviced in Pkg.)
7		1			SPRING, Gov. Weight (Serviced in Pkg.)
8		1			WEIGHT, Gov., Outer (Serviced in Pkg.)
9		1			BODY, Governor (Serviced in Pkg.)
10	6031 613	2			SCREW, Gov. Body Mtg., 1/4-20 x 3/4"
	6034 788	2			1/4-20 x 1.33"
11	6027 271	1			SNAP RING, Governor Body
12	1556 082	1			SHAFT, Governor Valve
13	4617 064	1			VALVE, Governor
14	1638 461	1			SNAP RING, Governor Valve Shaft
15	3743 519	1			FILTER, Governor

MODEL CODES:

72=2 DR Wagon
74=4 DR Wagon
77=Open Body 93" Whlbase
78=Open Body 103" Whlbase - Export
T=2WD
J,N=4WD
U=4WD (RHD)

BODY STYLES:

YJ=Wrangler (4X4) "S"
Weangler (4X4) SE
Wrangler (4X4) Sahara
Wrangler (4X4) Renegade
XJ=Cherokee SE
Cherokee Sport
Cherokee Country
ZJ=Grand Cherokee SE
Grand Cherokee Laredo
Grand Cherolee Limited
ZG=Grand Cherokee European
Y1=Wrangler
X1=Cherokee
Z1=Grand Cherokee
KDX=Vehicles

AR = Use as Required - = Non Illustrated Part P.A.R. = Paint as Required

GOVERNOR AUTOMATIC TRANSMISSION, 3 SPEED, 30RH WRANGLER YJ - CHEROKEE XJ
Figure 21A-610

21A-610

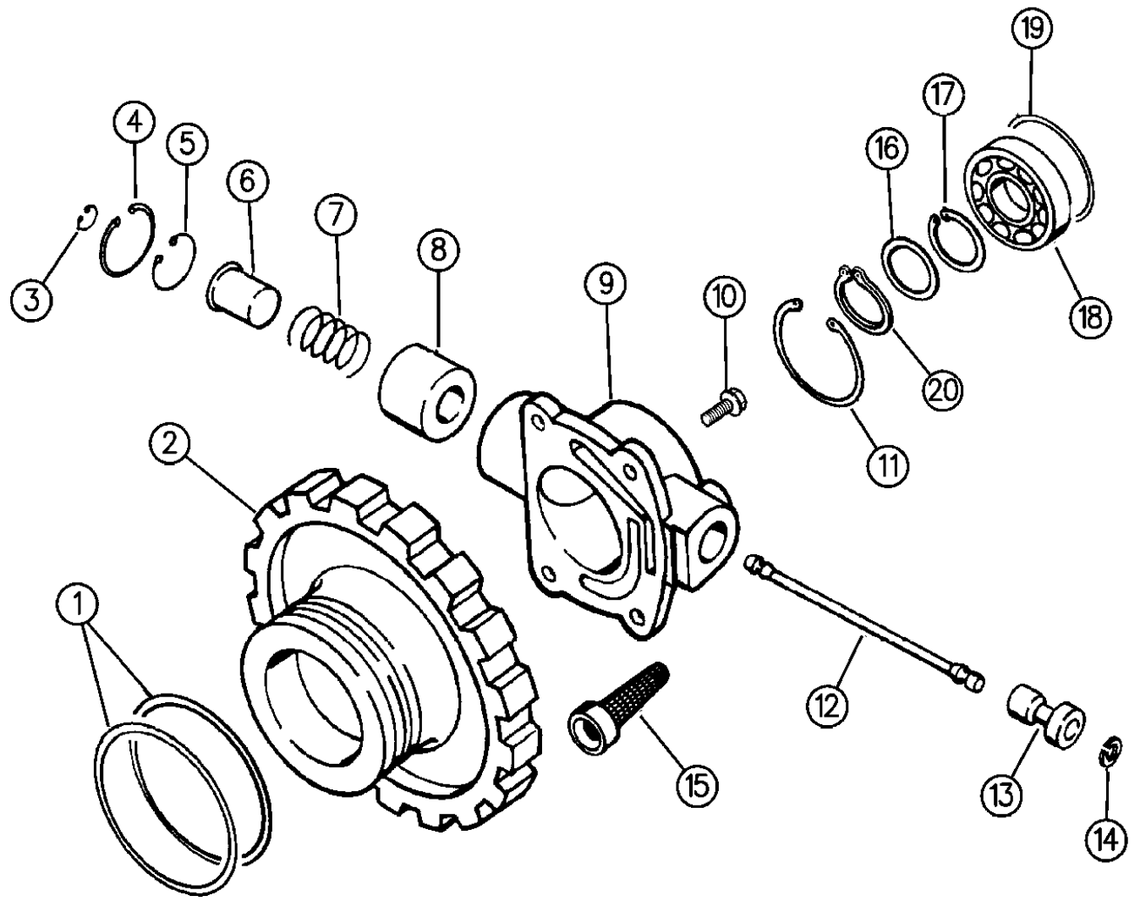

94J47 610

ITEM	PART NUMBER	QTY	BODY	MODEL	DESCRIPTION
16	4617 799	1		4WD	SPACER, Output Shaft Brg. Snap Ring
17	6029 675	1		2WD	SNAP RING, Output Shaft Brg., 1-37/64 O.D.
18	3410 465	1		2WD	BEARING, Output Shaft, 2.44" O.D., 1.16" I.D.
	4130 537	1		4WD	2.83" O.D., 1.23" I.D.
19	6032 739	1		4WD	O-RING, Output Shaft Bearing ***
20	6025 668	1		4WD	SNAP RING, Output Shaft Brg., 1-1/16" I.D.

MODEL CODES:

72=2 DR Wagon
74=4 DR Wagon
77=Open Body 93" Whlbase
78=Open Body 103" Whlbase - Export
T=2WD
J,N=4WD
U=4WD (RHD)

BODY STYLES:

YJ=Wrangler (4X4) "S"
Weangler (4X4) SE
Wrangler (4X4) Sahara
Wrangler (4X4) Renegade
XJ=Cherokee SE
Cherokee Sport
Cherokee Country
ZJ=Grand Cherokee SE
Grand Cherokee Laredo
Grand Cherolee Limited
ZG=Grand Cherokee European
Y1=Wrangler
X1=Cherokee
Z1=Grand Cherokee
KDX=Vehicles

AR = Use as Required - = Non Illustrated Part P.A.R. = Paint as Required

VALVE BODY AUTOMATIC TRANSMISSION, 3 SPEED, 30RH WRANGLER YJ - CHEROKEE XJ
Figure 21A-710

21A-710

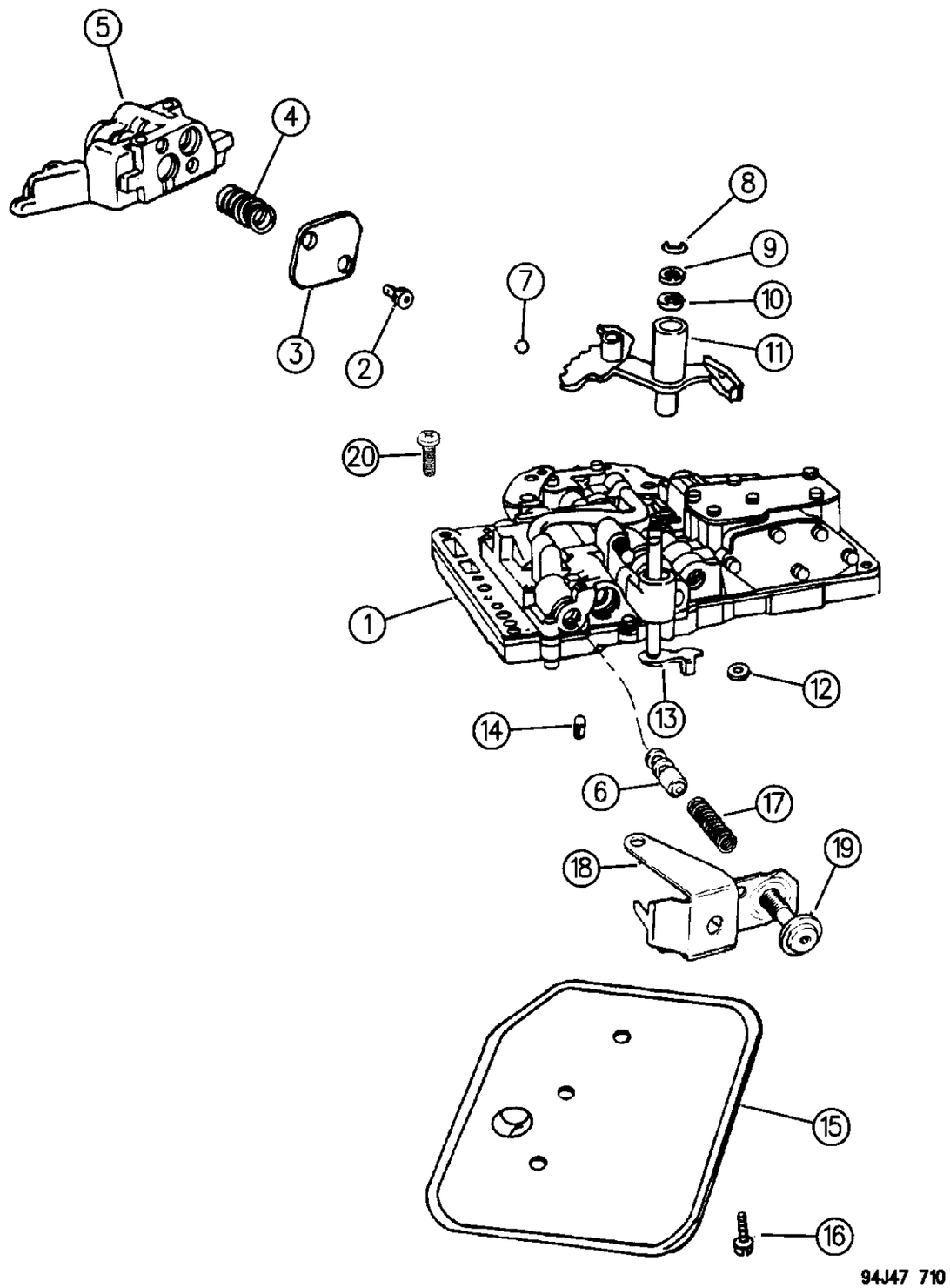

ITEM	PART NUMBER	QTY	BODY	MODEL	DESCRIPTION
	4713 105	1			GASKET and SEAL PACKAGE, Valve Body and Servo Recondition ***
					Consists Of:
					1 - 3878313 SCREEN, Regulator Valve
					1 - 4505098 SEAL, Manual Valve Shaft
					1 - 6028864 SEAL, K/Dn. Inner Piston
					1 - 6030657 SEAL, Rev. Band Lvr. Shaft
					1 - 4202864 SEAL, Rev. Servo Piston
					1 - 2466548 SEAL, Throttle Lever Shaft
					1 - 4295875 GASKET, Trans. Oil Pan
					1 - 4295965 SEAL RING, K/Dn. Servo Piston, Small
					1 - 3743033 SEAL RING, K/Dn. Servo Piston, Small
					1 - 6031410 SEAL, K/Dn. Servo Inner Piston
					2 - 1636470 SEAL RING, K/Dn. Servo Piston, Large
					1 - 4295966 SEAL RING, K/Dn. Servo Piston, Large
					1 - 1401221 SEAL RING, Accum. Piston, Small
					1 - 3743013 SEAL RING, Accum. Piston, Large
					1 - 3515996 FILTER, Trans. Oil
1					VALVE BODY ASSEMBLY ***
	4617 673	1			w/52119026
	5211 8394	1			w/52119106,52119107
	5211 8518	1			w/52119168
2	6030 888	2			SCREW, 10-24 x 7/16"
3		1			PLATE, Lock-Up Module End (Serv. in Valve Body Assy.)
	6030 366	3			SCREW, Lock-Up Valve Body To Transfer Plate 10-24 x 1-1/2"
4	4348 742	1			SPRING, Lock-Up Valve
5		1			BODY, Lock-Up Valve, (Serv. in Valve Body Assy.) ***
6	4505 036	1			VALVE, Trans. Lock-Up Switch
7	0147 488	1			BALL, Manual Lever Detent
8	6025 857	1			E-RING, Throttle Valve Lever Shaft
9	2538 062	1			WASHER, Throttle Valve Lever Shaft
10	2466 548	1			SEAL, Throttle Lever Shaft, Rubber, 5/8" O.D.
11	4617 439	1			LEVER, w/Insulator, Manual Valve
12	4505 098	1			SEAL, Manual Valve Shaft, 1-1/4" O.D.
13	3681 227	1			LEVER, Throttle Valve
14	3878 313	1			SCREEN, Regulator Valve
15	3515 996	1			FILTER, Strainer, Trans. Oil
16	6033 826	3			SCREW, Oil Filter, 10-24 x 2-1/2" Lg.
17	4130 492	1			SPRING, Switch Valve
18		1			BRACKET, Throttle Pressure Adj. Screw (Servied in Assy.)
19	6030 609	1			SCREW, Throttle Pressure Adjusting
20		14			SCREW, .190-24 x 1" (Not Serviced)

MODEL CODES:

72=2 DR Wagon
74=4 DR Wagon
77=Open Body 93" Whlbase
78=Open Body 103" Whlbase - Export
T=2WD
J,N=4WD
U=4WD (RHD)

BODY STYLES:

YJ=Wrangler (4X4) "S"
Weangler (4X4) SE
Wrangler (4X4) Sahara
Wrangler (4X4) Renegade
XJ=Cherokee SE
Cherokee Sport
Cherokee Country
ZJ=Grand Cherokee SE
Grand Cherokee Laredo
Grand Cherolee Limited
ZG=Grand Cherokee European
Y1=Wrangler
X1=Cherokee
Z1=Grand Cherokee
KDX=Vehicles

AR = Use as Required - = Non Illustrated Part P.A.R. = Paint as Required

VALVE BODY AUTOMATIC TRANSMISSION, 3 SPEED, 30RH WRANGLER YJ - CHEROKEE XJ
Figure 21A-710

21A-710

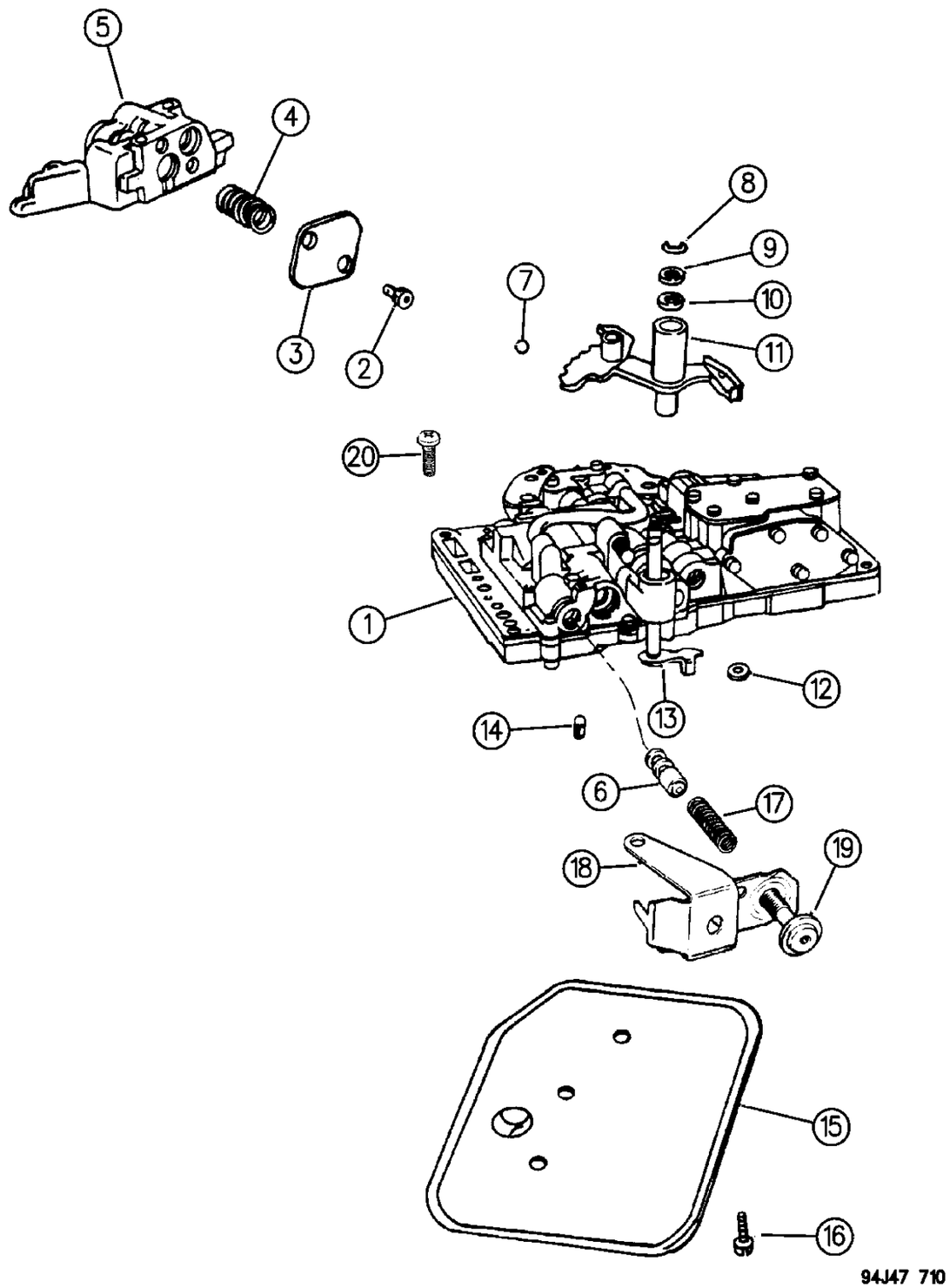

ITEM	PART NUMBER	QTY	BODY	MODEL	DESCRIPTION
	4348 907	1			SPRING, Limit Valve, (Not Shown)

MODEL CODES:

72=2 DR Wagon	77=Open Body 93" Whlbase	T=2WD	U=4WD (RHD)
74=4 DR Wagon	78=Open Body 103" Whlbase - Export	J,N=4WD	

BODY STYLES:

YJ=Wrangler (4X4) "S"	XJ=Cherokee SE	ZJ=Grand Cherokee SE	Y1=Wrangler
Weangler (4X4) SE	Cherokee Sport	Grand Cherokee Laredo	X1=Cherokee
Wrangler (4X4) Sahara	Cherokee Country	Grand Cherolee Limited	Z1=Grand Cherokee
Wrangler (4X4) Renegade		ZG=Grand Cherokee European	KDX=Vehicles

AR = Use as Required - = Non Illustrated Part P.A.R. = Paint as Required

RVOS, ACCUMULATOR PISTON AND SPRING AUTOMATIC TRANSMISSION, 3 SPEED, 30RH WRANGLER YJ - CHEROKEE XJ
Figure 21A-720

21A-720

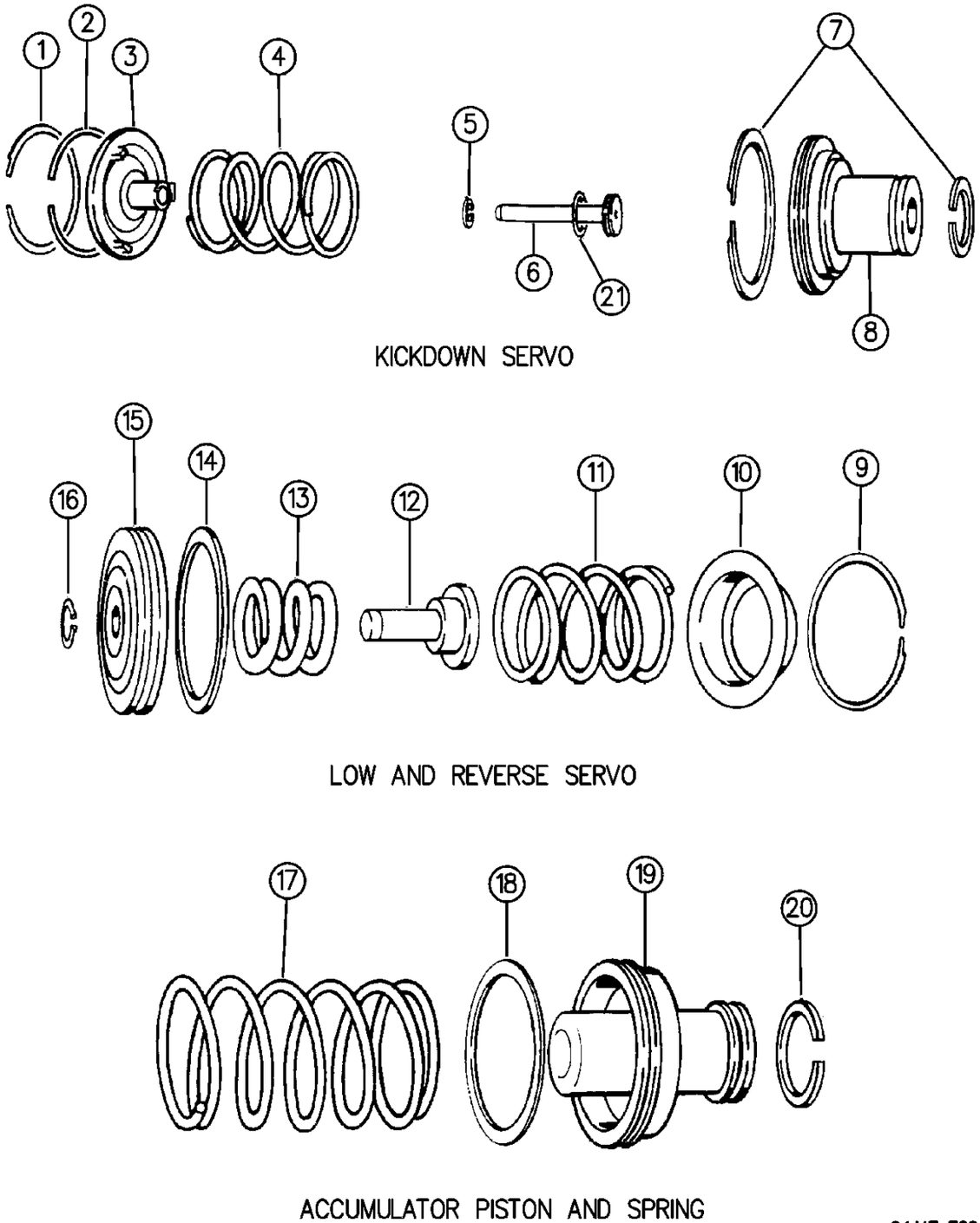

ITEM	PART NUMBER	QTY	BODY	MODEL	DESCRIPTION
1	1942 486	1			SNAP RING, Kickdown Servo Guide
2	3743 014	1			SEAL RING, K/Down Servo Guide ***
3	1942 485				GUIDE, Kickdown Servo
4	4531 119	1			SPRING, K/Down Servo Piston, Outer
5	6034 765	1			SNAP RING, Inner, 1-1/8" I.D.
6	4058 943	1			ROD, Kickdown Servo Piston
7	4295 965	1			SEAL RING, K/Down Servo Piston, Small ***
	1636 470	1			Large
8	4058 942	1			PISTON, Kickdown Servo ***
	6031 410	1			O-RING, Kickdown Servo Inner Piston (Not Shown) ***
9	2464 464	1			SNAP RING, Reverse Servo Piston Spring Retainer
10	2464 463	1			RETAINER, Reverse Servo Piston Spring
11	2801 274	1			SPRING, Reverse Servo Piston
12	3878 140	1			PLUG, Reverse Servo Piston
13	3743 580	1			SPRING, Reverse Servo Cushion
14	4202 864	1			SEAL, Reverse Servo Piston, Rubber
15	2801 271	1			PISTON, Reverse Servo ***
16	6027 153	1			RING, Reverse Servo Piston Plug, 7/16" I.D.
17	4531 259	1			SPRING, Accumulator
18	3743 013	1			RING, Accumulator Piston Seal, Large
19	3743 650	1			PISTON, Accumulator
20	3743 010	1			RING, Accumulator Piston Seal, Small
21	6028 864	1			SEAL, Inner, 15/16 x 1-1/8" x 3/32"

MODEL CODES:

72=2 DR Wagon
74=4 DR Wagon
77=Open Body 93" Whlbase
78=Open Body 103" Whlbase - Export
T=2WD
J,N=4WD
U=4WD (RHD)

BODY STYLES:

YJ=Wrangler (4X4) "S"
Weangler (4X4) SE
Wrangler (4X4) Sahara
Wrangler (4X4) Renegade
XJ=Cherokee SE
Cherokee Sport
Cherokee Country
ZJ=Grand Cherokee SE
Grand Cherokee Laredo
Grand Cherolee Limited
ZG=Grand Cherokee European
Y1=Wrangler
X1=Cherokee
Z1=Grand Cherokee
KDX=Vehicles

AR = Use as Required - = Non Illustrated Part P.A.R. = Paint as Required

« RETURN TO GROUP INDEX

PARKING SPRAG AUTOMATIC TRANSMISSION, 3 SPEED, 30RH WRANGLER YJ - CHEROKEE XJ
Figure 21A-730

21A-730

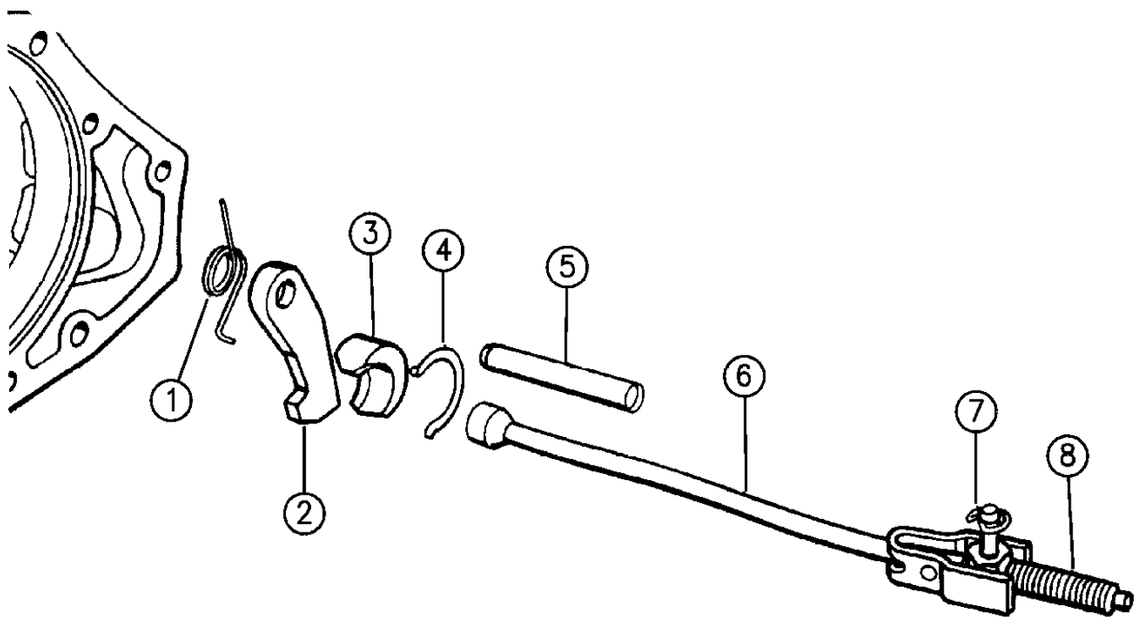

ITEM	PART NUMBER	QTY	BODY	MODEL	DESCRIPTION
1	2466 909	1			SPRING, Trans. Parking Sprag
2	4471 415	1			SPRAG, Trans. Parking, 5/8" Thk. ***
3	2538 042	1			PLUG, Parking Sprag Reaction
4	2538 034	1			SNAP RING, Reaction Plug
5	2466 892	1			SHAFT, Trans. Parking Sprag
6	2466 906	1			ROD ASSEMBLY, Parking Sprag, 8" Lg. ***
7	1626 749	1			E-RING, Rod
8		1			SPRING, (Serviced in Parking Sprag Rod Assy.)

MODEL CODES:

72=2 DR Wagon
74=4 DR Wagon
77=Open Body 93" Whlbase
78=Open Body 103" Whlbase - Export
T=2WD
J,N=4WD
U=4WD (RHD)

BODY STYLES:

YJ=Wrangler (4X4) "S"
Weangler (4X4) SE
Wrangler (4X4) Sahara
Wrangler (4X4) Renegade
XJ=Cherokee SE
Cherokee Sport
Cherokee Country
ZJ=Grand Cherokee SE
Grand Cherokee Laredo
Grand Cherolee Limited
ZG=Grand Cherokee European
Y1=Wrangler
X1=Cherokee
Z1=Grand Cherokee
KDX=Vehicles

AR = Use as Required - = Non Illustrated Part P.A.R. = Paint as Required

« RETURN TO GROUP INDEX

CONTROLS, SHIFT, LOWER, COLUMN AUTOMATIC TRANSMISSION, 30RH WRANGLER, YJ
Figure 21A-1210

21A-1210

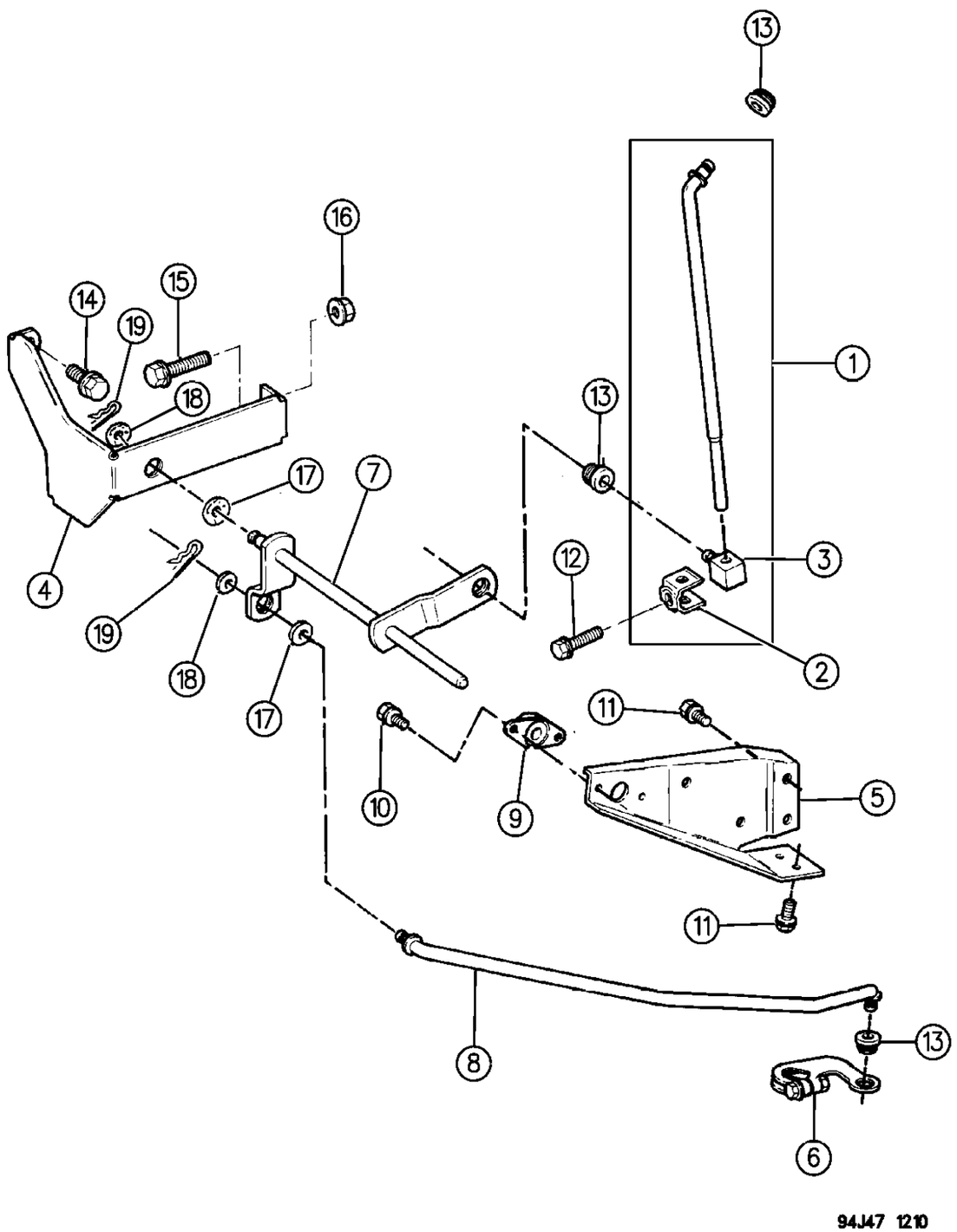

ITEM	PART NUMBER	QTY	BODY	MODEL	DESCRIPTION
1	5204 0190	1			ROD, Gear Selector
2	4443 412	1			CLAMP PACKAGE, Gear Selector Rod ***
3	J323 8417	1			TRUNNION, Selector Rod ***
4	5207 8364	1			BRACKET, Torque Shaft, Inner
5	5300 2020	1			BRACKET, Torque Shaft, Outer
6	5300 2026	1			LEVER, G/Shift Control
7	5207 8135	1			SHAFT, Torque Column Shift
8	5300 8530	1			ROD, Selector Lever
9	5207 8134	1			BEARING, Torque Shaft
10	J942 6241	2			SCREW, 1/4-14 x 1/2"
11	6032 953	4			SCREW, 5/16-18 x 3/4"
12	J400 6036	1			BOLT, 5/16-18 x 1/2"
13	3575 333	3			BUSHING, Rod End
14	J400 7155	2			BOLT
15	J941 9076	1			BOLT, 7/16-14 x 1-3/8"
16	J400 4005	1			NUT, 7/16-14
17	0391 888	2			WASHER, Spring
18	J012 0393	2			WASHER, Flat
19	J400 4295	2			PIN, Hair
-	5300 5154	1			GASKET, Bearing Isolation

MODEL CODES:

72=2 DR Wagon
74=4 DR Wagon
77=Open Body 93" Whlbase
78=Open Body 103" Whlbase - Export
T=2WD
J,N=4WD
U=4WD (RHD)

BODY STYLES:

YJ=Wrangler (4X4) "S"
Weangler (4X4) SE
Wrangler (4X4) Sahara
Wrangler (4X4) Renegade
XJ=Cherokee SE
Cherokee Sport
Cherokee Country
ZJ=Grand Cherokee SE
Grand Cherokee Laredo
Grand Cherolee Limited
ZG=Grand Cherokee European
Y1=Wrangler
X1=Cherokee
Z1=Grand Cherokee
KDX=Vehicles

AR = Use as Required - = Non Illustrated Part P.A.R. = Paint as Required

« RETURN TO GROUP INDEX

CONTROLS, GEARSHIFT, COLUMN MOUNTED AUTOMATIC TRANSMISSION CHEROKEE XJ
Figure 21A-1220

21A-1220

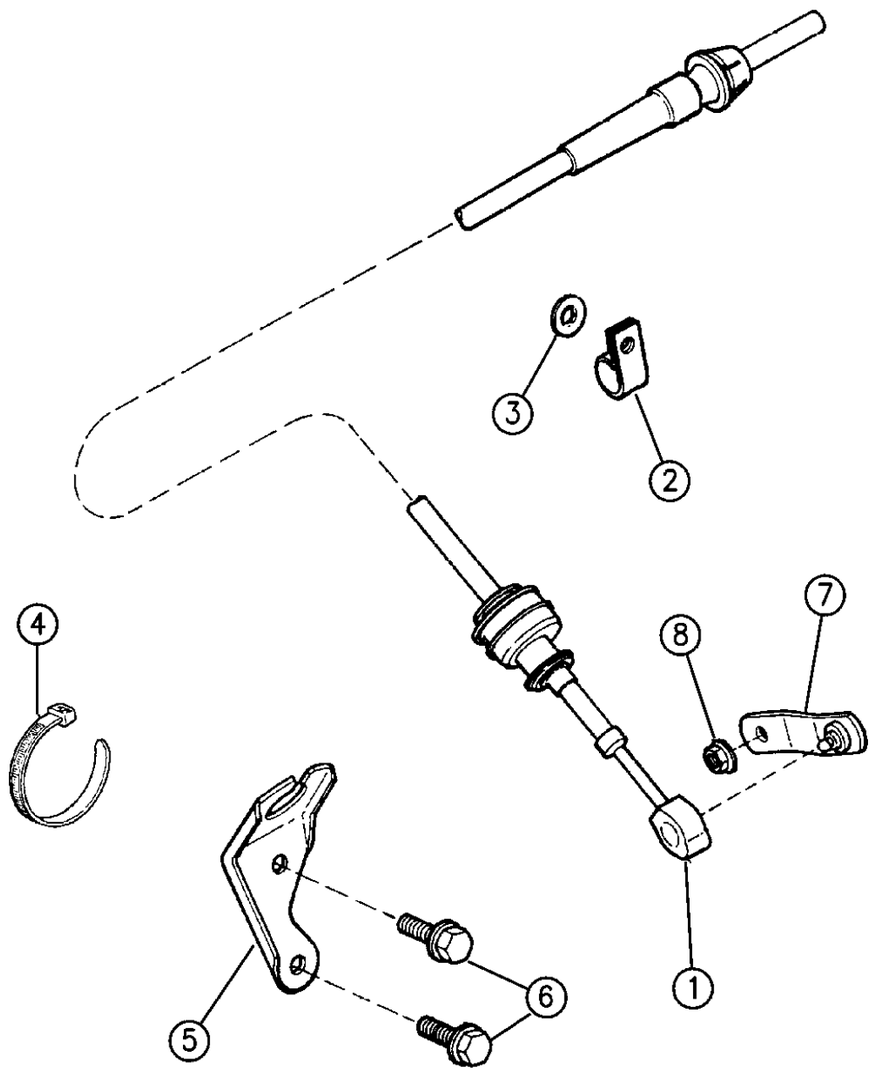

ITEM	PART NUMBER	QTY	BODY	MODEL	DESCRIPTION
1	5300 4562	1			CABLE, Gearshift
2	J012 5924	1			CLIP
3	J400 3084	1			NUT, Push 3/8 Dia.
4	3420 1788	1			STRAP
5	5207 8380	1			BRACKET, Shift Cable Mounting
6	3420 1871	2			BOLT, M8x1.25x25
7	5300 7747	1			LEVER, Manual Valve Shaft Shift
8	J420 0046	1			NUT, M8x1.25

MODEL CODES:

72=2 DR Wagon
74=4 DR Wagon
77=Open Body 93" Whlbase
78=Open Body 103" Whlbase - Export
T=2WD
J,N=4WD
U=4WD (RHD)

BODY STYLES:

YJ=Wrangler (4X4) "S"
Weangler (4X4) SE
Wrangler (4X4) Sahara
Wrangler (4X4) Renegade
XJ=Cherokee SE
Cherokee Sport
Cherokee Country
ZJ=Grand Cherokee SE
Grand Cherokee Laredo
Grand Cherolee Limited
ZG=Grand Cherokee European
Y1=Wrangler
X1=Cherokee
Z1=Grand Cherokee
KDX=Vehicles

AR = Use as Required - = Non Illustrated Part P.A.R. = Paint as Required

« RETURN TO GROUP INDEX

CONTROLS, GEARSHIFT, FLOOR MOUNTED AUTOMATIC TRANSMISSION CHEROKEE XJ
Figure 21A-1230

21A-1230

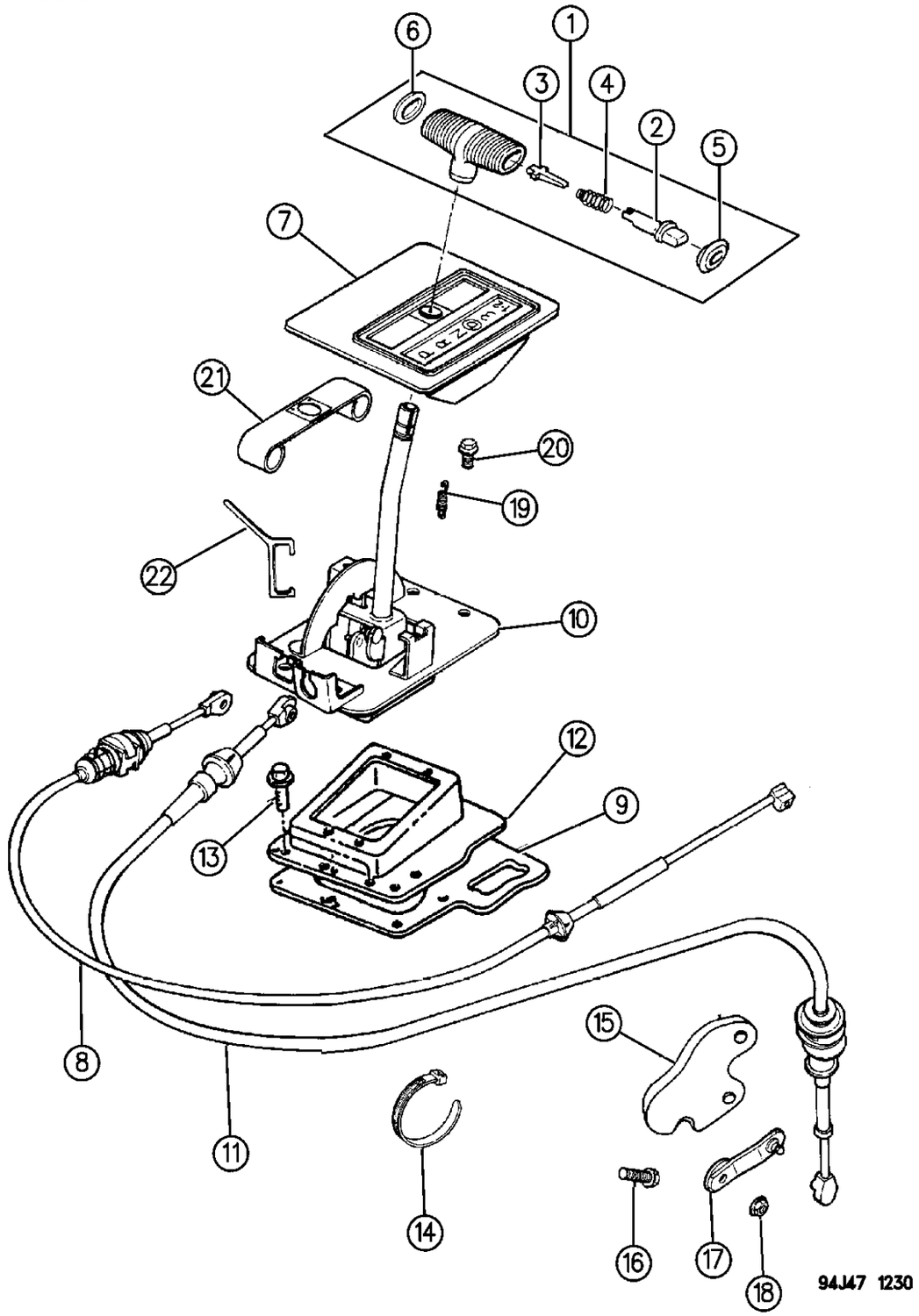

ITEM	PART NUMBER	QTY	BODY	MODEL	DESCRIPTION
1	5207 7560	1			HANDLE, Lever
2	5300 0211	1			BUTTON
3	5300 0865	1			LEVER
4	5300 0866	1			SPRING
5	5207 7561	1			CAP
6	5207 7562	1			CAP
7	5511 4582	1			BEZEL, Shift
	5511 5022	1		RHD	
8					CABLE, Gearshift Park Lock
	5300 4560	1			1994
	5207 8700	1			1995
	5207 8959	1			1996
9	5300 0659	1			SEAL, Shift Housing
10					HOUSING AND LEVER, Assy., Gearshift ***
	5207 8382	1			1994
	5207 8697	1			1995-96
	5207 8297	1		RHD	1994
	5207 8699	1			1995-96
11	5207 7532	1			CABLE, Gearshift Lever
12	5300 0704	1			COVER, Shift Housing
13	J400 1701	9			SCREW, 10-16 x 1/2"
	1150 2843	2			SCREW, Use w/CHINA, VENEZEULA
14	3420 1788	1			STRAP
15	5207 8380	1			BRACKET, Shift Cable Mtg.
16	3420 1871	2			BOLT, M8x1.25x18
17	5300 7747	1			LEVER, Manual Valve Shaft Shift
18	J420 0046	1			NUT, M8x1.25
19	5300 3350	1			SPRING, Pawl Return
20	1150 4284	4			BOLT, M8x1.25x18
21		1			SHIELD, Hsg. & Lever (Not Required)
22	5207 8063	1			GAGE, Auto Floor Shift Gear Selector ***

MODEL CODES:

72=2 DR Wagon
74=4 DR Wagon
77=Open Body 93" Whlbase
78=Open Body 103" Whlbase - Export
T=2WD
J,N=4WD
U=4WD (RHD)

BODY STYLES:

YJ=Wrangler (4X4) "S"
Weangler (4X4) SE
Wrangler (4X4) Sahara
Wrangler (4X4) Renegade

XJ=Cherokee SE
Cherokee Sport
Cherokee Country

ZJ=Grand Cherokee SE
Grand Cherokee Laredo
Grand Cherolee Limited
ZG=Grand Cherokee European

Y1=Wrangler
X1=Cherokee
Z1=Grand Cherokee
KDX=Vehicles

AR = Use as Required - = Non Illustrated Part P.A.R. = Paint as Required

« RETURN TO GROUP INDEX

SAGIPARTS

GROUP-21B
AUTOMATIC TRANSMISSION (31RH)

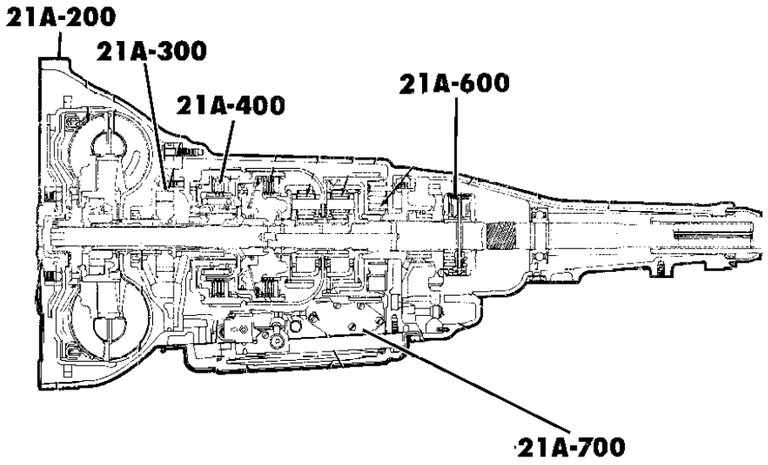

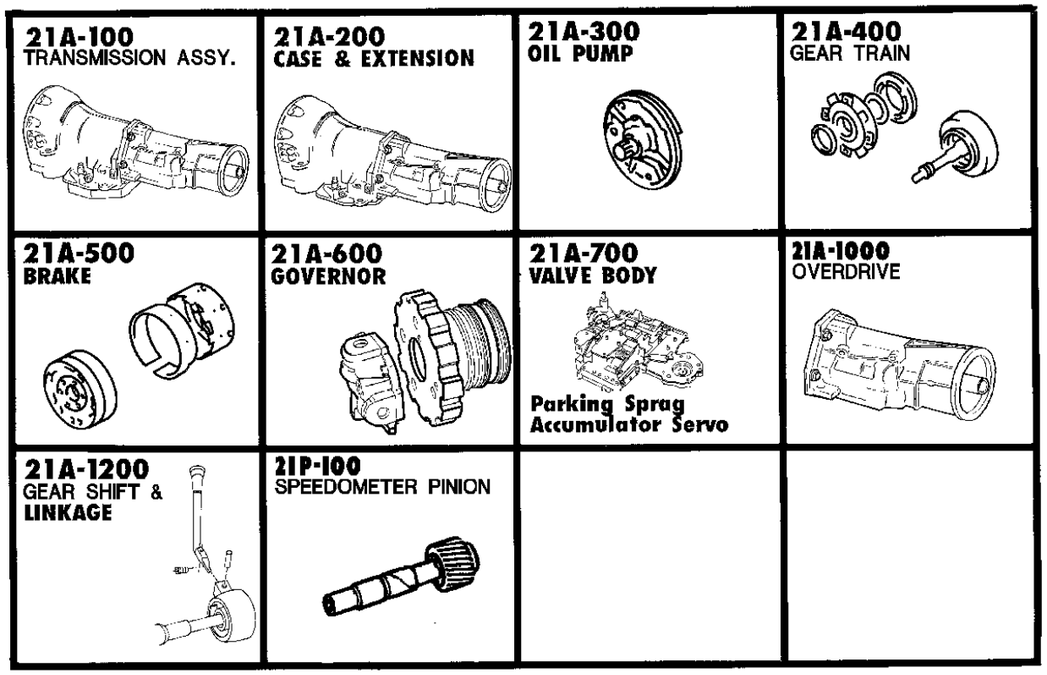

GROUP 21B - TRANS. AUTO 31RH 3 SPEED

ILLUSTRATION TITLE	GROUP-FIG. NO.
TRANSMISSION ASSEMBLY	
TRANSMISSION ASSEMBLY AUTOMATIC TRANSMISSION, 3 SPEED, 31RH,32RH WRANGLER YJ	Fig. 21B-110
CASE AND EXTENSION	
CASE AND RELATED PARTS AUTOMATIC TRANSMISSION, 3 SPEED, 31RH,32RH WRANGLER YJ	Fig. 21B-210
OIL PUMP	
PUMP, OIL WITH REACTION SHAFT AUTOMATIC TRANSMISSION, 3 SPEED, 31RH,32RH WRANGLER YJ	Fig. 21B-310
GEAR TRAIN	
CLUTCH, FRONT AND REAR WITH GEAR TRAIN AUTOMATIC TRANSMISSION, 3 SPEED, 31RH,32RH WRANGLER YJ	Fig. 21B-410
GEAR TRAIN AND OUTPUT SHAFT AUTOMATIC TRANSMISSION, 3 SPEED, 31RH,32RH WRANGLER YJ	Fig. 21B-420
BANDS, REVERSE AND KICKDOWN	
BANDS, REVERSE AND KICKDOWN WITH LINKAGE AUTOMATIC TRANSMISSION, 3 SPEED, 31RH,32RH WRANGLER YJ	Fig. 21B-510
GOVERNOR	
GOVERNOR AUTOMATIC TRANSMISSION, 3 SPEED, 31RH,32RH WRANGLER YJ	Fig. 21B-610
VALVE BODY, SERVO AND PARKING SPRAG	
VALVE BODY AUTOMATIC TRANSMISSION, 3 SPEED, 31RH,32RH WRANGLER YJ	Fig. 21B-710
SERVOS, ACCUMULATOR PISTON AND SPRING AUTOMATIC TRANSMISSION, 3 SPEED, 31RH,32RH WRANGLER YJ	Fig. 21B-720
PARKING SPRAG AUTOMATIC TRANSMISSION, 3 SPEED, 31RH,32RH WRANGLER YJ	Fig. 21B-730
GEARSHIFT CONTROLS	
CONTROLS, SHIFT, LOWER, COLUMN AUTOMATIC TRANSMISSION, 31RH,32RH WRANGLER YJ	Fig. 21B-1210

TRANSMISSION ASSEMBLY AUTOMATIC TRANSMISSION, 3 SPEED, 31RH,32RH WRANGLER YJ
Figure 21B-110

21B-110

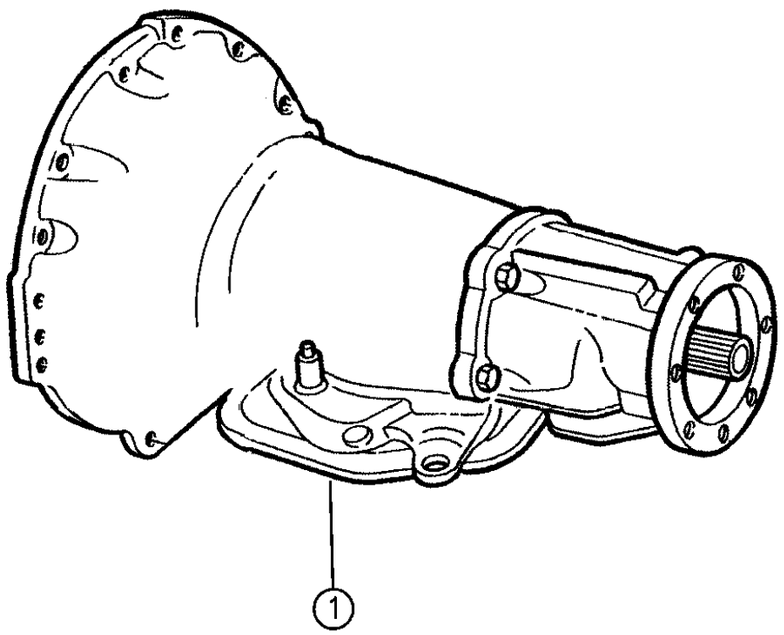

94J48 110

ITEM	PART NUMBER	QTY	BODY	MODEL	DESCRIPTION
					TRANSMISSION ASSEMBLY, 3 Speed Automatic ***
1	5211 8024 5211 8367	1	YJ	4WD	31RH,32RH, w/4.0L Eng., w/Lock-Up

MODEL CODES:

72=2 DR Wagon
74=4 DR Wagon
77=Open Body 93" Whlbase
78=Open Body 103" Whlbase - Export
T=2WD
J,N=4WD
U=4WD (RHD)

BODY STYLES:

YJ=Wrangler (4X4) "S"
Weangler (4X4) SE
Wrangler (4X4) Sahara
Wrangler (4X4) Renegade
XJ=Cherokee SE
Cherokee Sport
Cherokee Country
ZJ=Grand Cherokee SE
Grand Cherokee Laredo
Grand Cherolee Limited
ZG=Grand Cherokee European
Y1=Wrangler
X1=Cherokee
Z1=Grand Cherokee
KDX=Vehicles

AR = Use as Required - = Non Illustrated Part P.A.R. = Paint as Required

CASE AND RELATED PARTS AUTOMATIC TRANSMISSION, 3 SPEED, 31RH,32RH WRANGLER YJ
Figure 21B-210

21B-210

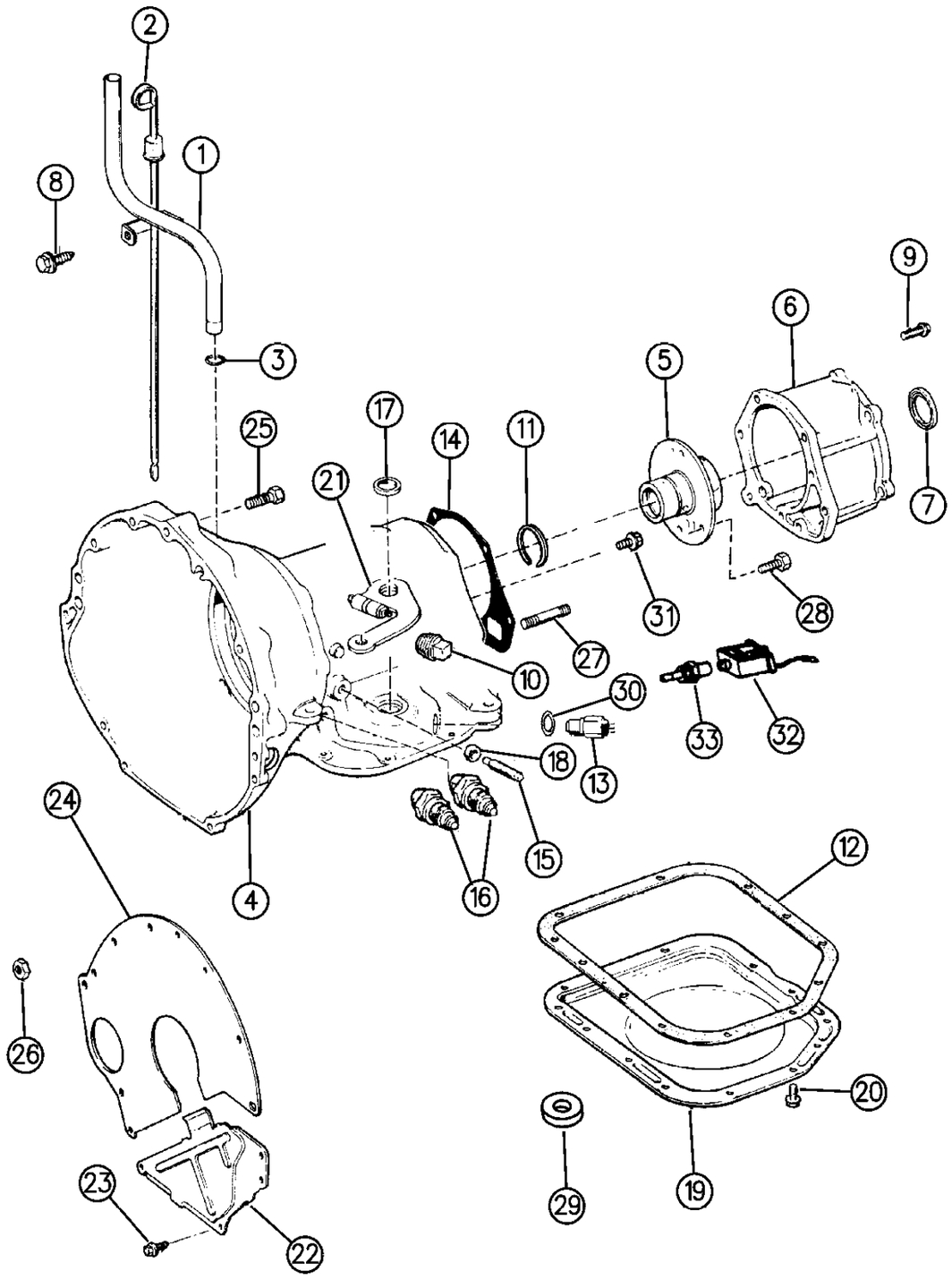

ITEM	PART NUMBER	QTY	BODY	MODEL	DESCRIPTION
	4741 453	1			GASKET and SEAL PACKAGE, Major Repair ***
1	5300 2009	1			TUBE, Oil Indicator
2	5300 3661	1			INDICATOR, Trans. Oil Level ***
3	J094 0298	1			O-RING, Oil Indicator Tube ***
4					CASE, Automatic Trans. ***
	4617 686	1			w/52118024
	5211 8392	1			w/52118367
5	4431 433	1			SUPPORT, Shaft 6 Hole
6	4505 236	1			ADAPTER, Automatic Trans.
7	4269 956	1			SEAL, Adapter
8	J400 1701	1			SCREW, .190-16 x 1/2"
9	6030 849	5			BOLT, 3/8-16 x 1-3/8"
10	6028 095	AR			PLUG, Pressure Check, 1/8-27 Pipe
11	6033 480	1			RING, Reverse Drum Retaining
12	4295 875	1			GASKET, Pan
13	3747 361	1			SWITCH, Neutral Starter and Back-Up Light Safety
14	2466 954	1			GASKET, Case To Adapter
15	1942 477	1			SCREW, Band Adjusting
16	4617 517	1			CONNECTOR, Oil Cooler Quick Disconnect, For 3/8" Tubing
17	4505 098	1			SEAL, Manual Valve Lever Shaft
18	0124 934	1			LOCK NUT, K/Down Band Adj., 1/2-20
19	4202 005	1			PAN, Trans. Oil
20	4723 548	14			SCREW, 5/16-18 x 5/8"
21	5300 2026	1			LEVER, Shift Control
22	J321 3744	1			COVER
23	J400 0987	4			SCREW, 5/16-18 x 5/8"
24	J323 7847	1			SPACER
25	J400 1885	5			BOLT, 3/8-16 x 2-1/8"
	J400 4370	2			7/16-14 x 2-3/4"
26	J021 9422	2			NUT, 3/8-16
27	6033 157	1			STUD, Adapter to Case
28	6033 479	6			BOLT, 1/4-28 x 1-5/8"
29	3681 601	1			MAGNET, Chip Collector ***
30	2408 143	1			WASHER, B/U Light Switch
31	6033 616	5			SCREW, 1/4-28 x 7/8"
32	4348 719	1			SOLENOID, Trans. Unlock ***
33	4348 945	1			CONNECTOR, Solenoid Unlock wiring

MODEL CODES:

72=2 DR Wagon
74=4 DR Wagon
77=Open Body 93" Whlbase
78=Open Body 103" Whlbase - Export
T=2WD
J,N=4WD
U=4WD (RHD)

BODY STYLES:

YJ=Wrangler (4X4) "S"
Weangler (4X4) SE
Wrangler (4X4) Sahara
Wrangler (4X4) Renegade
XJ=Cherokee SE
Cherokee Sport
Cherokee Country
ZJ=Grand Cherokee SE
Grand Cherokee Laredo
Grand Cherolee Limited
ZG=Grand Cherokee European
Y1=Wrangler
X1=Cherokee
Z1=Grand Cherokee
KDX=Vehicles

AR = Use as Required - = Non Illustrated Part P.A.R. = Paint as Required

« RETURN TO GROUP INDEX

PUMP, OIL WITH REACTION SHAFT AUTOMATIC TRANSMISSION, 3 SPEED, 31RH,32RH WRANGLER YJ
Figure 21B-310

21B-310

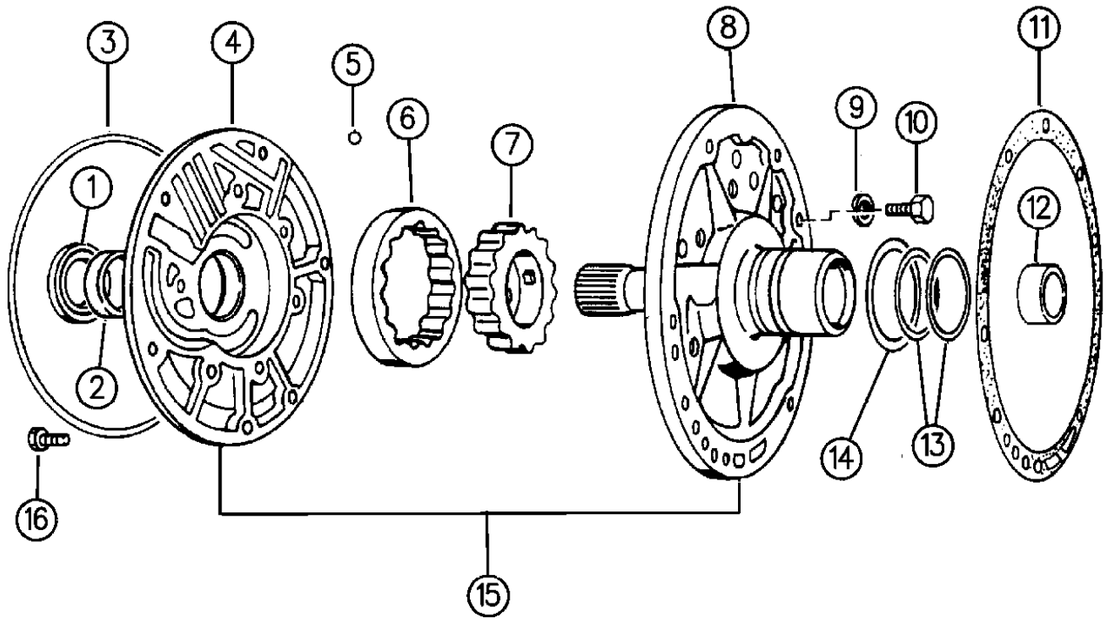

94J48 310

ITEM	PART NUMBER	QTY	BODY	MODEL	DESCRIPTION
	4713 108	1			GASKET and SEAL PACKAGE, Frt. Pump ***
					Consists Of:
					1 - 4412475 SEAL, T/C Impeller Hub
					1 - 2204709 SEAL, Oil Pump
					1 - 4617840 GASKET, T/C Reaction Shaft Support
					2 - 4471874 SEAL RING, Reaction Shaft Support
					2 - 1401221 SEAL RING, Input Shaft Frt.
					1 - 4028333 SEAL RING, Rr. Clutch Retainer
					1 - K685-2070 Instruction Sheet
1	4412 475	1			SEAL, T/C Impeller Hub, 57.25mm O.D.
2	2466 796	1			BUSHING, Frt. Pump Hsg.
3	2204 709	1			SEAL, Frt. Pump Hsg. 8-17/64" O.D.
4		1			HOUSING, w/Bushing, Rotors Frt. Pump (Serviced in Pump Assy.)
5	0104 918	AR			BALL, Suppt., 1/4" Dia.
		AR			Support, Small 9/32" (Not Serviced)
6		1			ROTOR, (Serviced in Assy.) ***
7		1			ROTOR, (Serviced in Assy.) ***
8		1			SHAFT, w/Support, Reaction (Serviced in Pump Assy.)
9		6			LOCK WASHER, (Not Serviced) ***
10	0179 815	6			SCREW, Support, 5/16"-18 x 11/16"
11	4617 840	1			GASKET, Reaction Shaft Support
	5211 8266	1			w/52118367
12	4058 635	1			BUSHING, Shaft, .968" O.D.
13	4471 874	2			SEAL RING, Reaction Shaft Support 2-1/16 I.D. ***
14	4617 786	2			WASHER, Frt. Clutch Thrust, 2-5/8" O.D.
15	4773 241	1			PUMP ASSEMBLY, Oil, w/Support and Reaction Shaft, w/Lock-Up Torque Converter ***
16	6023 943	6			SCREW, w/Washer, Hsg. 5/16-18 x 1-3/8"

MODEL CODES:

72=2 DR Wagon
74=4 DR Wagon
77=Open Body 93" Whlbase
78=Open Body 103" Whlbase - Export
T=2WD
J,N=4WD
U=4WD (RHD)

BODY STYLES:

YJ=Wrangler (4X4) "S"
Weangler (4X4) SE
Wrangler (4X4) Sahara
Wrangler (4X4) Renegade

XJ=Cherokee SE
Cherokee Sport
Cherokee Country

ZJ=Grand Cherokee SE
Grand Cherokee Laredo
Grand Cherolee Limited
ZG=Grand Cherokee European

Y1=Wrangler
X1=Cherokee
Z1=Grand Cherokee
KDX=Vehicles

AR = Use as Required - = Non Illustrated Part P.A.R. = Paint as Required

« RETURN TO GROUP INDEX

CLUTCH, FRONT AND REAR WITH GEAR TRAIN AUTOMATIC TRANSMISSION, 3 SPEED, 31RH,32RH WRANGLER YJ
Figure 21B-410

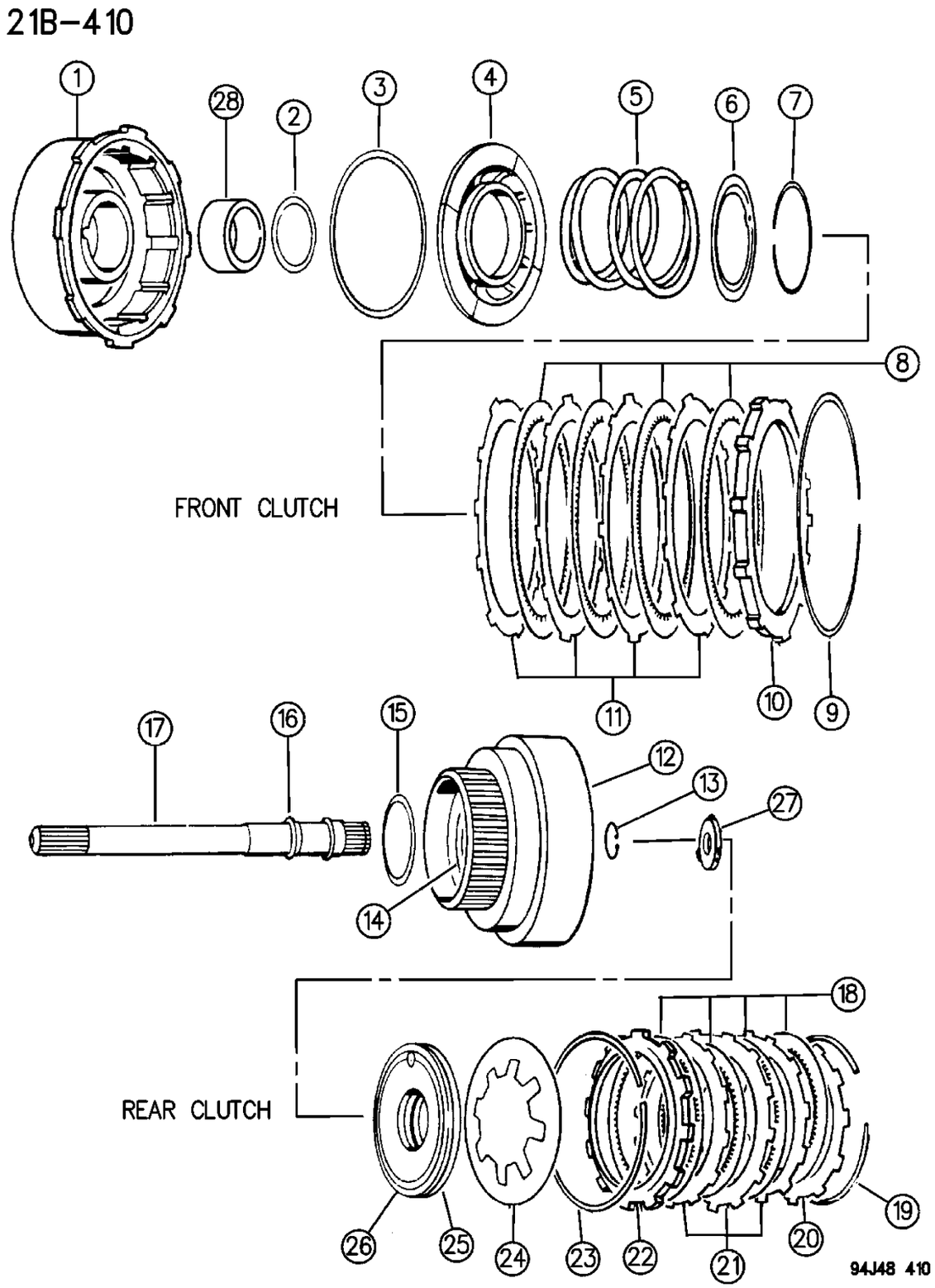

ITEM	PART NUMBER	QTY	BODY	MODEL	DESCRIPTION
	5252 926	1			SEAL and WASHER PACKAGE, Front and Rear Clutch ***
					Consists Of:
					1 - 3515176 SEAL, Frt. Clutch Piston, Inner
					1 - 4058487 SEAL, Frt. Clutch Piston, Outer
					1 - 2538510 SEAL, Rear Clutch Piston, Inner
					1 - 2538695 SEAL, Rear Clutch Piston, Outer
					1 - 4505185 WASHER, Output Shaft Thrust
					1 - 4505186 WASHER, Output Shaft Thrust
					1 - 4505187 WASHER, Output Shaft Thrust
1	4531 285	1			RETAINER, w/o Seals, Frt. Clutch
2	3515 176	1			SEAL, Frt. Clutch Piston, Rubber, Inner
3	4058 487	1			SEAL, Frt. Clutch Piston, Outer
4	4617 154	1			PISTON, Frt. Clutch
	0147 483	1			BALL, 3/16" Dia.
5	3515 054	1			SPRING, Frt. Clutch Piston
6	4617 516	1			RETAINER, Frt. Clutch Piston Spring
	0147 483	1			BALL, Check Valve 3/16"
7	1942 400	1			SNAP RING, Frt. Clutch 2-7/16" O.D., 060" Thk., Inner
8	4617 362	4			DISC, Frt. Clutch
9	3410 571	1			SNAP RING, Frt. Clutch, Outer
10	4617 176	1			PLATE, Frt. Clutch Pressure
11	1942 403	4			PLATE, Frt. Clutch
12	4505 199	1			RETAINER, Rear Clutch
	0147 483	1			BALL, Check Valve 3/16"
13	6022 859	1			SNAP RING, Input Shaft 57/64", .059" Thk.
14	4028 333	1			SEAL, Rr. Clutch Retainer Ring, 1-1/2" O.D., .09" Thk.
15	4617 786	2			WASHER, Frt. Clutch Thrust 2-5/8" O.D.
16	1401 221	1			SEAL RING, Input Shaft, Front
	1401 221	1			Rear
17	4505 189	1			SHAFT, Input
18	4713 880	4			DISC, Rear Clutch ***
19					SNAP RING, Rr. Clutch Retainer 5-11/32" O.D.
	4130 761	AR			.060" Thk.
	4539 121	AR			.076" Thk.
	4539 122	AR			.098" Thk.
	4539 123	AR			.095" Thick
	4539 124	AR			.107" Thick
20	4617 176	1			PLATE, Rr. Clutch Pressure, Rear
21	1942 403	4			PLATE, Rear Clutch
22	2466 281	1			PLATE, Rr. Clutch Pressure, Front
23	2466 283	1			SPRING, Rr. Clutch Wave
24	4728 487	1			SPRING, Rr. Clutch Piston

MODEL CODES:

72=2 DR Wagon
74=4 DR Wagon
77=Open Body 93" Whlbase
78=Open Body 103" Whlbase - Export
T=2WD
J,N=4WD
U=4WD (RHD)

BODY STYLES:

YJ=Wrangler (4X4) "S"
Weangler (4X4) SE
Wrangler (4X4) Sahara
Wrangler (4X4) Renegade
XJ=Cherokee SE
Cherokee Sport
Cherokee Country
ZJ=Grand Cherokee SE
Grand Cherokee Laredo
Grand Cherolee Limited
ZG=Grand Cherokee European
Y1=Wrangler
X1=Cherokee
Z1=Grand Cherokee
KDX=Vehicles

AR = Use as Required - = Non Illustrated Part P.A.R. = Paint as Required

CLUTCH, FRONT AND REAR WITH GEAR TRAIN AUTOMATIC TRANSMISSION, 3 SPEED, 31RH,32RH WRANGLER YJ
Figure 21B-410

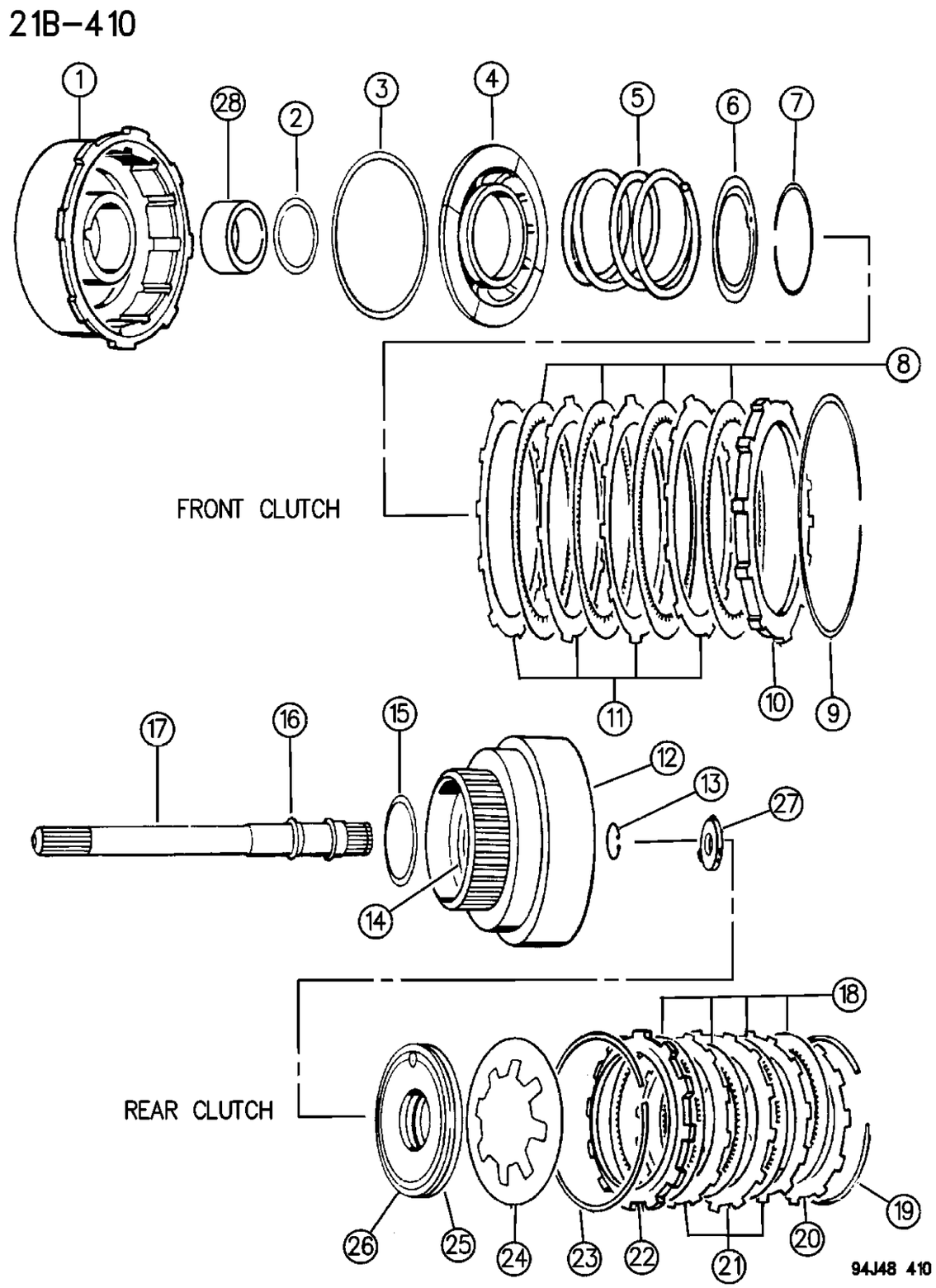

ITEM	PART NUMBER	QTY	BODY	MODEL	DESCRIPTION
25	2538 695	1			SEAL, Rr. Clutch Piston, Rubber, Outer
	2538 510	1			Inner
26	3515 716	1			PISTON, Rr. Clutch
27					WASHER, Output Shaft Thrust, w/3 Point Bronze Face
	4505 185	AR			.052" Thk., Gray
	4505 186	AR			.068" Thk., Red
	4505 187	AR			.083" Thk., Green
28	4617 157	1			BUSHING, Frt. Clutch Retainer, Front
	4617 159	1			Rear

MODEL CODES:

72=2 DR Wagon
74=4 DR Wagon
77=Open Body 93" Whlbase
78=Open Body 103" Whlbase - Export
T=2WD
J,N=4WD
U=4WD (RHD)

BODY STYLES:

YJ=Wrangler (4X4) "S"
Weangler (4X4) SE
Wrangler (4X4) Sahara
Wrangler (4X4) Renegade

XJ=Cherokee SE
Cherokee Sport
Cherokee Country

ZJ=Grand Cherokee SE
Grand Cherokee Laredo
Grand Cherolee Limited
ZG=Grand Cherokee European

Y1=Wrangler
X1=Cherokee
Z1=Grand Cherokee
KDX=Vehicles

AR = Use as Required - = Non Illustrated Part P.A.R. = Paint as Required

GEAR TRAIN AND OUTPUT SHAFT AUTOMATIC TRANSMISSION, 3 SPEED, 31RH,32RH WRANGLER YJ
Figure 21B-420

21B-420

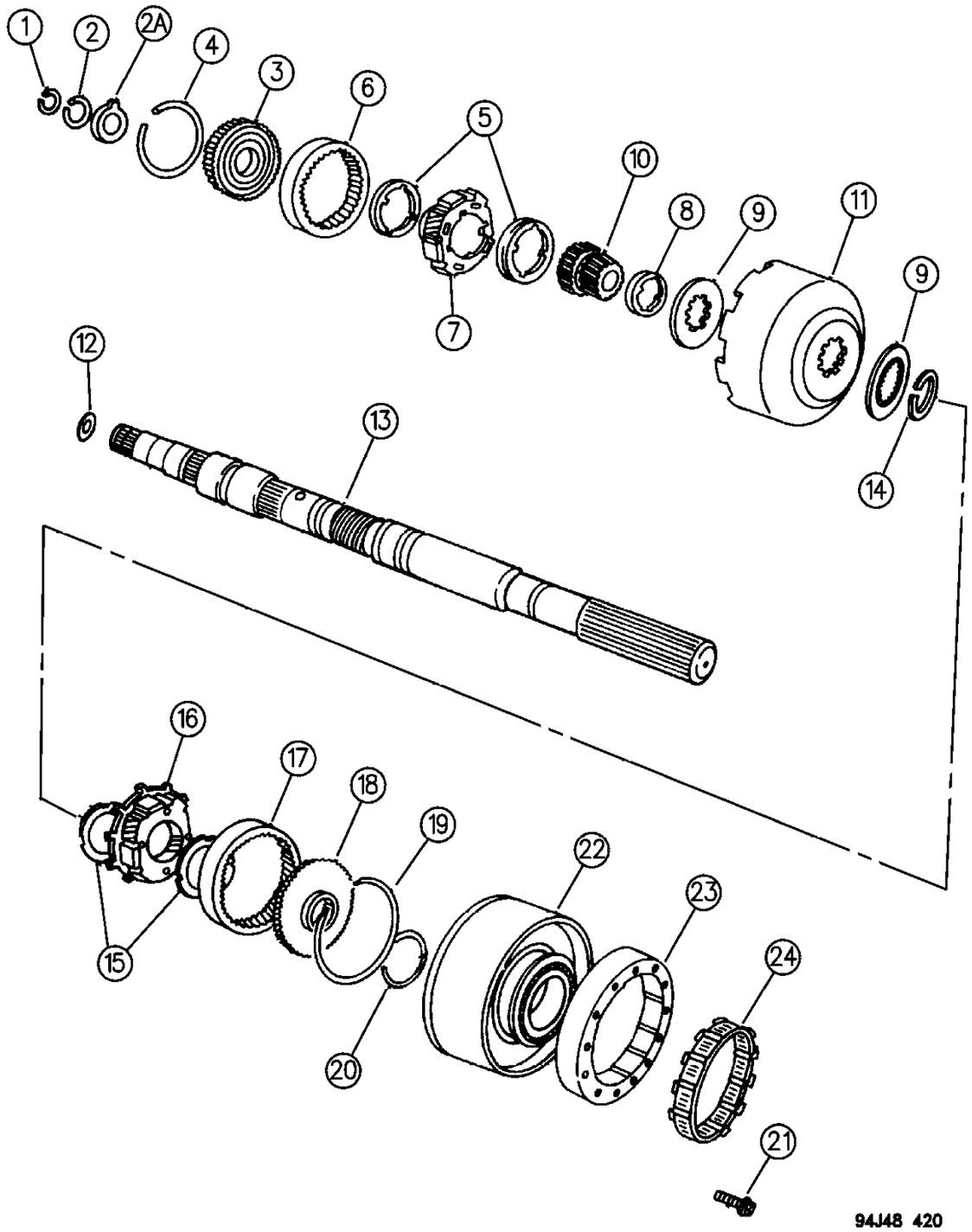

ITEM	PART NUMBER	QTY	BODY	MODEL	DESCRIPTION
1	6026 289	AR			SNAP RING, Output Shaft, .946" I.D., .040" Thk.
	6030 938	AR			.910" I.D., .062" Thk., Green
	6030 404	AR			.906" I.D., .084" Thk., White
2	6030 576	1			SNAP RING, Frt. Annulus Gear Support, 1-3/8" I.D.
2A	3681 969	1			WASHER, Frt. Annulus Gear Support, Thrust w/Lip, Steel Backed Bronze 2-1/8" O.D.
3	4617 774	1			SUPPORT, w/Bushing, Frt. Annulus Gear
	6030 576	1			SNAP RING, Frt., 1-3/8" I.D.
4	4130 513	1			SNAP RING, Front Annulus Gear, 4-5/8" O.D.
5	4130 518	2			WASHER, Front Carrier Thrust, 2-5/8" I.D., w/4 Tabs I.D.
6	4130 512	1			GEAR, Front Annulus
7	4130 514	1			CARRIER ASSEMBLY, Front Planet Pinion
	3681 949	AR			RING, Frt. and Rr. Planet Pinion Roller Thrust
8	4130 736	1			SPACER, Sun Gear, 4 Inner Teeth, 2" O.D.
9	4471 566	2			PLATE, Sun Gear Driving Shell, Thrust
10	4130 685	1			GEAR, w/Bushing, Sun 38T-28T
11	4531 288	1			SHELL, Sun Gear Driving
12	4505 188	1			Plate, Output Shaft Thrust, Flat 1-3/8" Dia., .060" Thick ***
13	4617 320	1			SHAFT, w/Plug, Output
14	1942 439	1			LOCK RING, Sun Gear Driving Shell, 1-41/64" O.D.
15	3681 935	2			WASHER, Rr. Planet Pinion Carrier Thrust, 2" I.D., w/4 Tabs, O.D.
16	4431 438	1			CARRIER ASSEMBLY, Rear Planet Pinion
17	3743 184	1			GEAR, Rear Annulus
18	3515 501	1			SUPPORT, Rr. Annulus Gear, 62T, 28T, 4" O.D.
19	1942 444	1			SNAP RING, Rr. Annulus Gear, 4-1/16" O.D.
20	6033 480	1			RING, Reverse Drum Retaining
21	6033 616	6			SCREW, Cam to Case, 1/4-28 x 7/8"
22	4637 956	1			DRUM, Reverse
23	4431 690	1			CAM, "O" Running Clutch
24	4431 432	1			CLUTCH ASSEMBLY, "O" Running, w/12 Rollers, Springs and Retainer

MODEL CODES:

72=2 DR Wagon
74=4 DR Wagon
77=Open Body 93" Whlbase
78=Open Body 103" Whlbase - Export
T=2WD
J,N=4WD
U=4WD (RHD)

BODY STYLES:

YJ=Wrangler (4X4) "S"
Weangler (4X4) SE
Wrangler (4X4) Sahara
Wrangler (4X4) Renegade
XJ=Cherokee SE
Cherokee Sport
Cherokee Country
ZJ=Grand Cherokee SE
Grand Cherokee Laredo
Grand Cherolee Limited
ZG=Grand Cherokee European
Y1=Wrangler
X1=Cherokee
Z1=Grand Cherokee
KDX=Vehicles

AR = Use as Required - = Non Illustrated Part P.A.R. = Paint as Required

« RETURN TO GROUP INDEX

BANDS, REVERSE AND KICKDOWN WITH LINKAGE AUTOMATIC TRANSMISSION, 3 SPEED, 31RH,32RH WRANGLER YJ
Figure 21B-510

21B-510

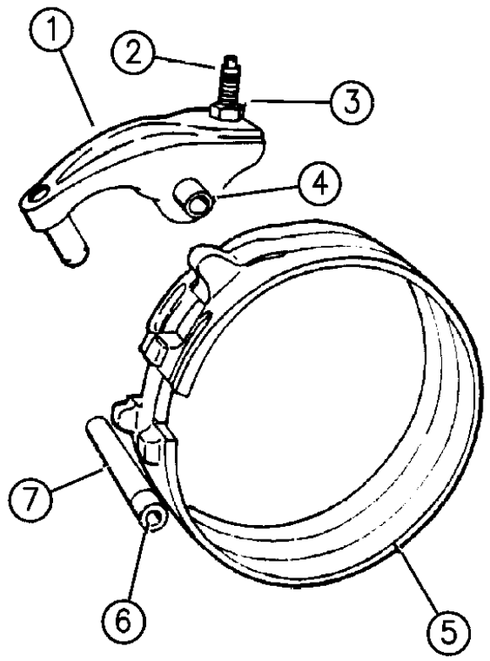

REVERSE BAND

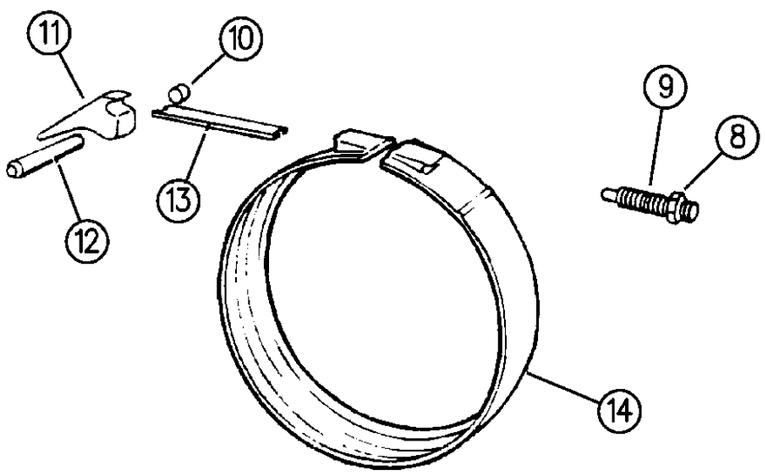

KICKDOWN BAND

94J48 510

ITEM	PART NUMBER	QTY	BODY	MODEL	DESCRIPTION
1	4202 764	1			LEVER, w/Stem, Rev. Band
	4202 765	1			w/o Stem
2	2538 472	1			SCREW, Reverse Band Adjusting, 3/8-24 x 1-7/8"
3	0114 942	1			NUT, Adj. Screw Lock, 3/8-24
4	3410 102	1			SHAFT, Rev. Band Lever
5	4443 187	1			BAND, Reverse
6	6030 657	2			SEAL, Rev. Band Lever Shaft
7	3410 102	1			SHAFT, Rev. Band Reaction
8	0124 934	1			LOCK NUT, 1/2-20
9	1942 477	1			SCREW, Kickdown Band Adj., 1/2-20 x 2-7/8"
10		1			PLUG, Shaft Lever (Not Serviced)
11	2124 666	1			LEVER, Kickdown Band
12	4531 181	1			SHAFT, Kickdown Lever
13	3515 084	1			STRUT, Kickdown Band ***
14	4617 849	1			BAND, Kickdown

MODEL CODES:

72=2 DR Wagon
74=4 DR Wagon
77=Open Body 93" Whlbase
78=Open Body 103" Whlbase - Export
T=2WD
J,N=4WD
U=4WD (RHD)

BODY STYLES:

YJ=Wrangler (4X4) "S"
Weangler (4X4) SE
Wrangler (4X4) Sahara
Wrangler (4X4) Renegade
XJ=Cherokee SE
Cherokee Sport
Cherokee Country
ZJ=Grand Cherokee SE
Grand Cherokee Laredo
Grand Cherolee Limited
ZG=Grand Cherokee European
Y1=Wrangler
X1=Cherokee
Z1=Grand Cherokee
KDX=Vehicles

AR = Use as Required - = Non Illustrated Part P.A.R. = Paint as Required

« RETURN TO GROUP INDEX

GOVERNOR AUTOMATIC TRANSMISSION, 3 SPEED, 31RH,32RH WRANGLER YJ
Figure 21B-610

21B-610A

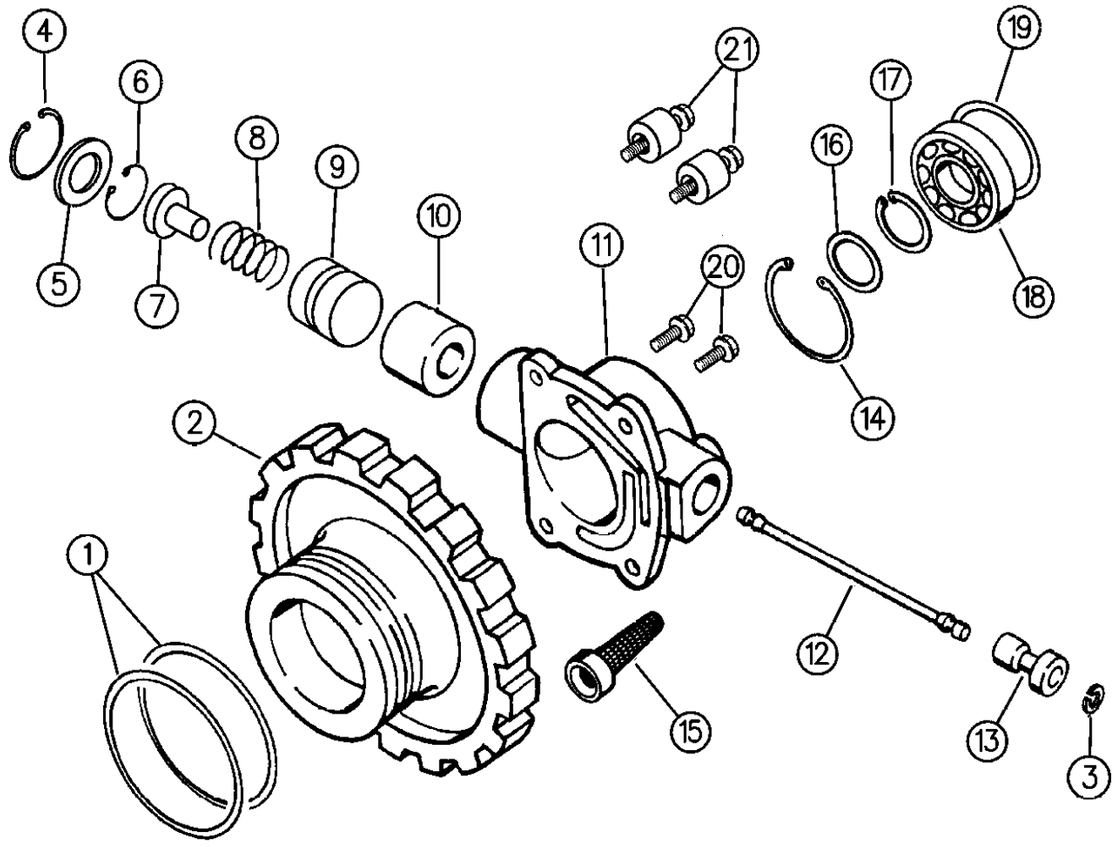

94J48 610

ITEM	PART NUMBER	QTY	BODY	MODEL	DESCRIPTION
	4728 460	1			BODY PACKAGE, Governor ***
					Consists Of:
					1 - 4617813 BODY, Governor
					1 - 1556082 SHAFT, Gov. Valve
					2 - 1638461 SNAP RING, Valve Shaft
					1 - 6031392 SNAP RING, Weight, Outer
					1 - 4617597 RETAINER, Gov. Wt.
					2 - 1942109 SEAL RING, Gov. Support
					1 - 4617064 VALVE, Governor
					1 - 3743519 FILTER, Governor
					4 - 6031613 BOLT, Gov. Body
					1 - 2801398 GASKET, O/P Shaft Brg. Cover
	4106 556	1			GASKET and SEAL PACKAGE, Governor ***
					Consists Of:
					1 - 3743519 FILTER, Governor
					1 - 4058047 SEAL, Yoke (Small)
					1 - 2466954 GASKET, Ext.
					1 - 2801398 GSKT., O/P Shaft Brg. Cover
					1 - 6030608 SEAL, Oil Filler Tube
					2 - 1942109 SEAL RING, Gov. Supt.
	4617 883	1			WEIGHT PACKAGE, Governor (4800RPM) ***
					Consists Of:
					1 - 4617513 WEIGHT, Inner
					1 - 4617802 WEIGHT, Intermediate
					1 - 4617884 WEIGHT, Outer
					1 - 4617881 SPRING, Weight
					1 - 6034723 SNAP RING, Inner Weight
1	1942 109	2			RING, Governor Support Seal, Frt. & Rr.
2	3743 518	1			SUPPORT, Governor
3	1638 461	2			SNAP RING, Governor Valve Shaft
4	6034 765	1			SNAP RING, Governor Weight, Outer, 1.274" O.D.
5		1			RETAINER, Gov. Weight (Serviced in Pkg.)
6	6034 723	1			SNAP RING, Governor Weight, Inner, .675" O.D.
7		1			WEIGHT, Gov., Inner (Serviced in Pkg.) ***
8		1			SPRING, Gov. Weight (Serviced in Pkg.)
9		1			WEIGHT, Gov., Intermediate (Serviced in Pkg.) ***
10		1			WEIGHT, Gov., Outer (Serviced in Pkg.) ***
11		1			BODY, Governor (Serviced in Pkg.) ***
12	1556 082	1			SHAFT, Governor Valve
13	4617 064	1			VALVE, Governor
14	6027 271	1			SNAP RING, Governor Body
15	3743 519	1			FILTER, Governor

MODEL CODES:

72=2 DR Wagon
74=4 DR Wagon
77=Open Body 93" Whlbase
78=Open Body 103" Whlbase - Export
T=2WD
J,N=4WD
U=4WD (RHD)

BODY STYLES:

YJ=Wrangler (4X4) "S"
Weangler (4X4) SE
Wrangler (4X4) Sahara
Wrangler (4X4) Renegade
XJ=Cherokee SE
Cherokee Sport
Cherokee Country
ZJ=Grand Cherokee SE
Grand Cherokee Laredo
Grand Cherolee Limited
ZG=Grand Cherokee European
Y1=Wrangler
X1=Cherokee
Z1=Grand Cherokee
KDX=Vehicles

AR = Use as Required - = Non Illustrated Part P.A.R. = Paint as Required

GOVERNOR AUTOMATIC TRANSMISSION, 3 SPEED, 31RH,32RH WRANGLER YJ
Figure 21B-610

21B-610A

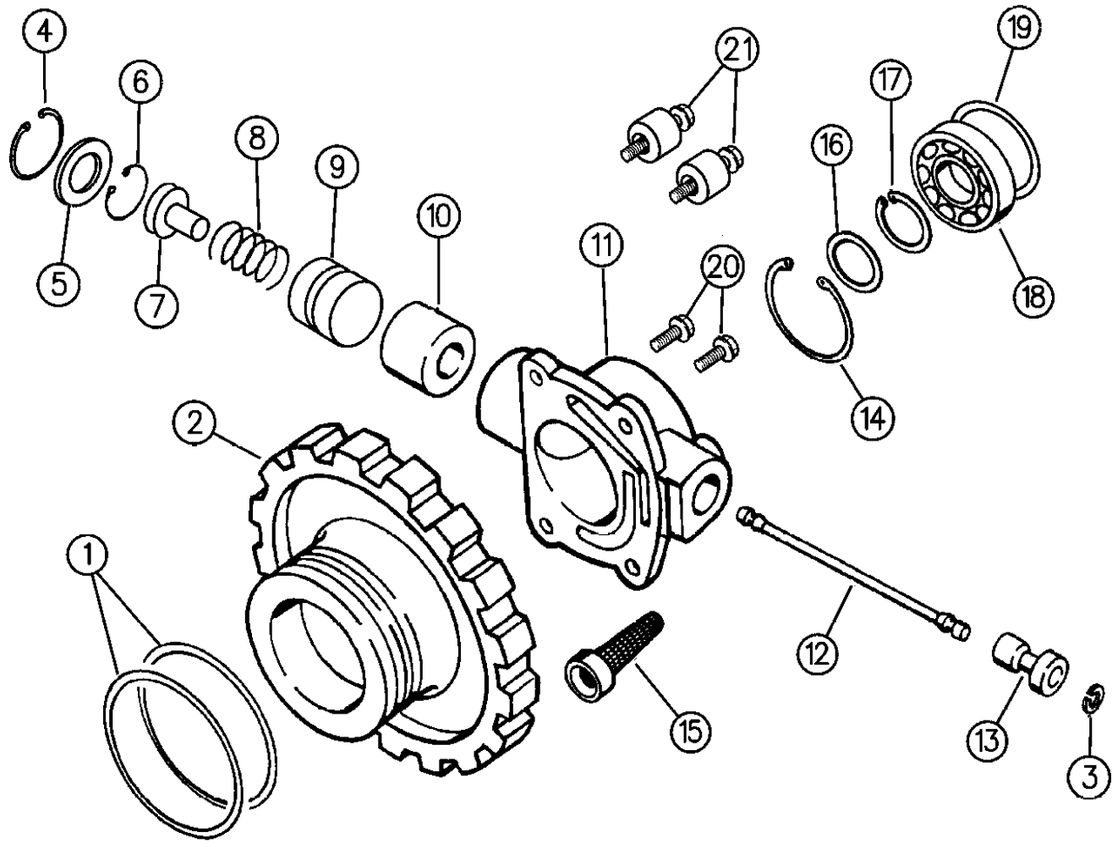

94J48 610

ITEM	PART NUMBER	QTY	BODY	MODEL	DESCRIPTION
16	4617 799	1			SPACER, Output Shaft Brg. Snap Ring
17	6025 668	1			SNAP RING, Output Shaft Brg., 1-1/16" I.D.
18	4130 537	1			BEARING, Output Shaft, 2.83" O.D., 1.23" I.D.
19	6032 739	1			O-RING, Output Shaft Bearing ***
20	6031 613	2			SCREW, Gov. Body Mtg., 1/4-20 x 3/4"
21	6034 788	2			SCREW, Gov. Body Mtg., 1/4-20 x 1.33" (Holds Counter Weights)

MODEL CODES:

72=2 DR Wagon
74=4 DR Wagon
77=Open Body 93" Whlbase
78=Open Body 103" Whlbase - Export
T=2WD
J,N=4WD
U=4WD (RHD)

BODY STYLES:

YJ=Wrangler (4X4) "S"
Weangler (4X4) SE
Wrangler (4X4) Sahara
Wrangler (4X4) Renegade

XJ=Cherokee SE
Cherokee Sport
Cherokee Country

ZJ=Grand Cherokee SE
Grand Cherokee Laredo
Grand Cherolee Limited
ZG=Grand Cherokee European

Y1=Wrangler
X1=Cherokee
Z1=Grand Cherokee
KDX=Vehicles

AR = Use as Required - = Non Illustrated Part P.A.R. = Paint as Required

VALVE BODY AUTOMATIC TRANSMISSION, 3 SPEED, 31RH,32RH WRANGLER YJ
Figure 21B-710

21B-710

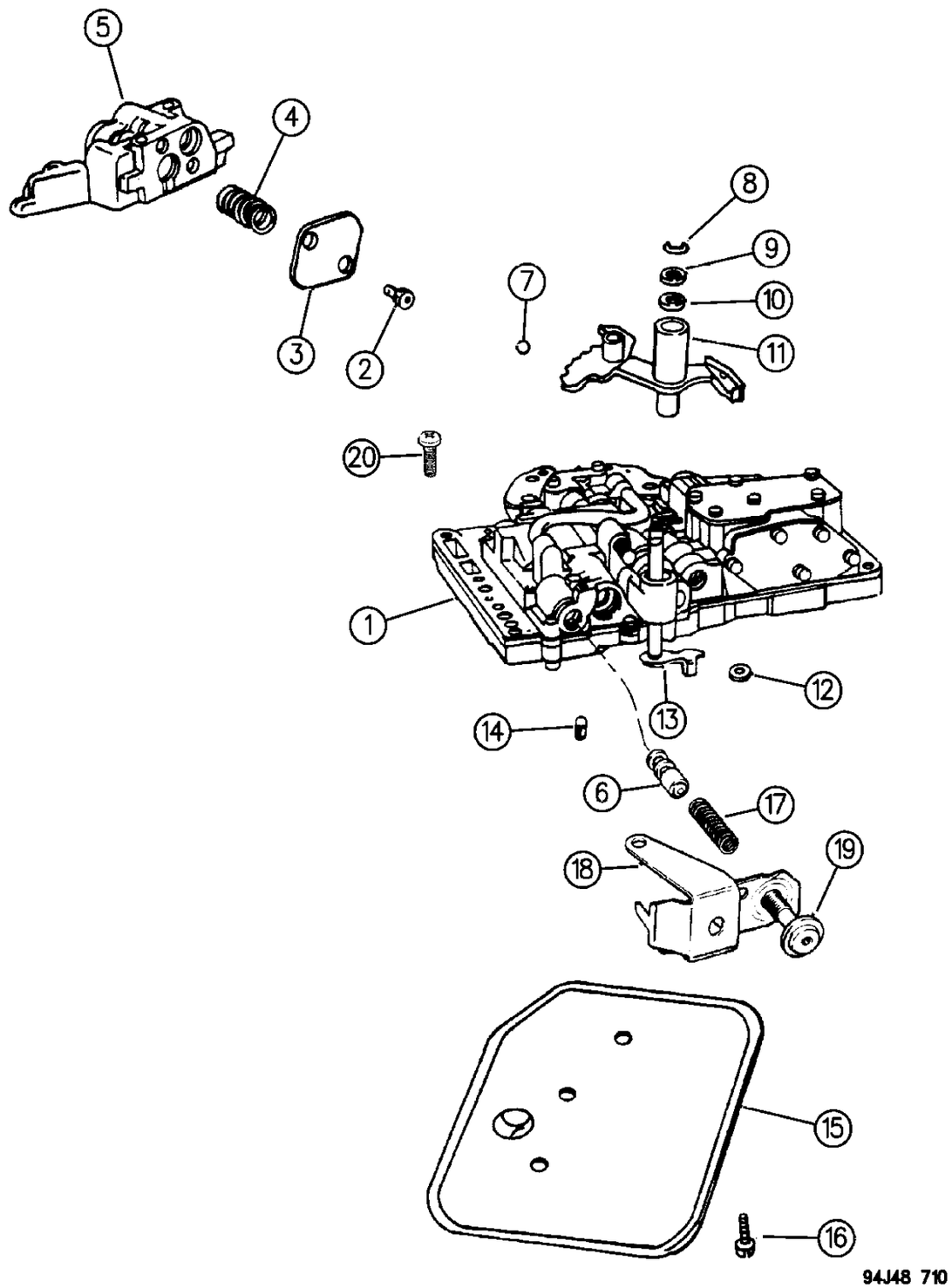

ITEM	PART NUMBER	QTY	BODY	MODEL	DESCRIPTION
	4713 105	1			GASKET and SEAL PACKAGE, Valve Body and Servo Recondition ***
					Consists Of:
					1 - 3878313 SCREEN, Regulator Valve
					1 - 4505098 SEAL, Manual Valve Shaft
					1 - 6028864 SEAL, K/Dn. Inner Piston
					1 - 6030657 SEAL, Rev. Band Lvr. Shaft
					1 - 4202864 SEAL, Rev. Servo Piston
					1 - 2466548 SEAL, Throttle Lever Shaft
					1 - 4295875 GASKET, Trans. Oil Pan
					1 - 4295965 SEAL RING, K/Dn. Servo Piston, Small
					1 - 3743033 SEAL RING, K/Dn. Servo Piston, Small
					1 - 6031410 SEAL, K/Dn. Servo Inner Piston
					2 - 1636470 SEAL RING, K/Dn. Servo Piston, Large
					1 - 4295966 SEAL RING, K/Dn. Servo Piston, Large
					1 - 1401221 SEAL RING, Accum. Piston, Small
					1 - 3743013 SEAL RING, Accum. Piston, Large
					1 - 3515996 FILTER, Trans. Oil
1					VALVE BODY ASSEMBLY ***
	4617 688	1			w/52118024
	5211 8396	1			w/52118367
	5211 8520	1			w/52119156
2	6030 888	2			SCREW, 10-24 x 7/16"
3		1			PLATE, Lock-Up Module End (Serv. in Valve Body Assy.)
	6030 366	3			SCREW, Lock-Up Valve Body To Transfer Plate 10-24 x 1-1/2"
4	4348 742	1			SPRING, Lock-Up Valve
5		1			BODY, Lock-Up Valve, (Serv. in Valve Body Assy.) ***
6	4505 036	1			VALVE, Trans. Lock-Up Switch
7	0147 488	1			BALL, Manual Lever Detent
8	6025 857	1			E-RING, Throttle Valve Lever Shaft
9	2538 062	1			WASHER, Throttle Valve Lever Shaft
10	2466 548	1			SEAL, Throttle Lever Shaft, Rubber, 5/8" O.D.
11	4617 439	1			LEVER, w/Insulator, Manual Valve
12	4505 098	1			SEAL, Manual Valve Shaft, 1-1/4" O.D.
13	3681 227	1			LEVER, Throttle Valve
14	3878 313	1			SCREEN, Regulator Valve
15	3515 996	1			FILTER, Strainer, Trans. Oil
16	6033 826	3			SCREW, Oil Filter, 10-24 x 2-1/2" Lg.
17	4130 492	1			SPRING, Switch Valve
18		1			BRACKET, Throttle Pressure Adj. Screw (Servied in Assy.)
19	6030 609	1			SCREW, Throttle Pressure Adjusting
20		14			SCREW, .190-24 x 1" (Not Serviced)

MODEL CODES:

72=2 DR Wagon
74=4 DR Wagon
77=Open Body 93" Whlbase
78=Open Body 103" Whlbase - Export
T=2WD
J,N=4WD
U=4WD (RHD)

BODY STYLES:

YJ=Wrangler (4X4) "S"
Weangler (4X4) SE
Wrangler (4X4) Sahara
Wrangler (4X4) Renegade
XJ=Cherokee SE
Cherokee Sport
Cherokee Country
ZJ=Grand Cherokee SE
Grand Cherokee Laredo
Grand Cherolee Limited
ZG=Grand Cherokee European
Y1=Wrangler
X1=Cherokee
Z1=Grand Cherokee
KDX=Vehicles

AR = Use as Required - = Non Illustrated Part P.A.R. = Paint as Required

VALVE BODY AUTOMATIC TRANSMISSION, 3 SPEED, 31RH,32RH WRANGLER YJ
Figure 21B-710

21B-710

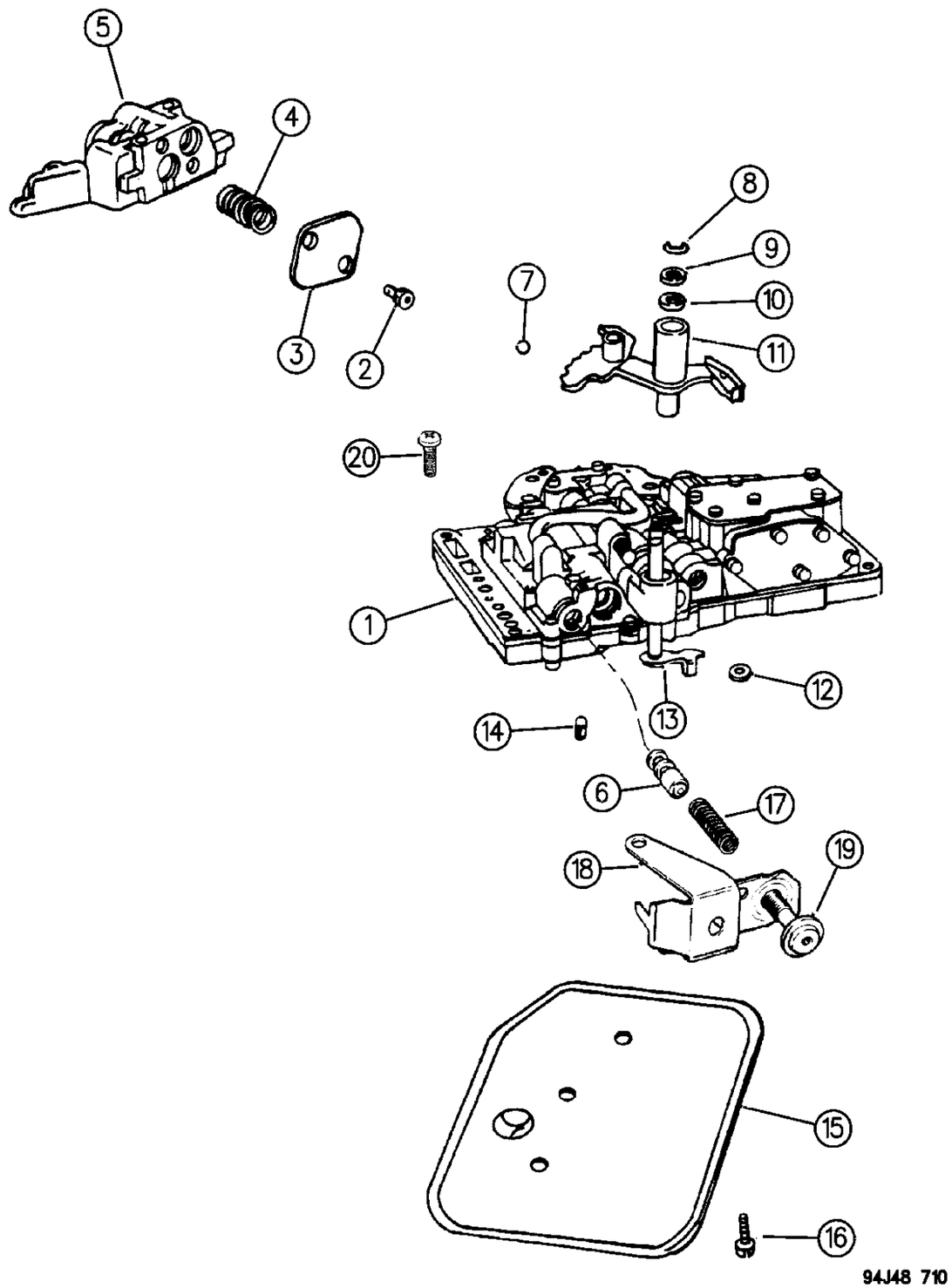

ITEM	PART NUMBER	QTY	BODY	MODEL	DESCRIPTION
	4348 907	1			SPRING, Limit Valve, (Not Shown)

MODEL CODES:

72=2 DR Wagon	77=Open Body 93" Whlbase	T=2WD	U=4WD (RHD)
74=4 DR Wagon	78=Open Body 103" Whlbase - Export	J,N=4WD	

BODY STYLES:

YJ=Wrangler (4X4) "S"	XJ=Cherokee SE	ZJ=Grand Cherokee SE	Y1=Wrangler
Weangler (4X4) SE	Cherokee Sport	Grand Cherokee Laredo	X1=Cherokee
Wrangler (4X4) Sahara	Cherokee Country	Grand Cherolee Limited	Z1=Grand Cherokee
Wrangler (4X4) Renegade		ZG=Grand Cherokee European	KDX=Vehicles

AR = Use as Required - = Non Illustrated Part P.A.R. = Paint as Required

SERVOS, ACCUMULATOR PISTON AND SPRING AUTOMATIC TRANSMISSION, 3 SPEED, 31RH,32RH WRANGLER YJ
Figure 21B-720

21B-720

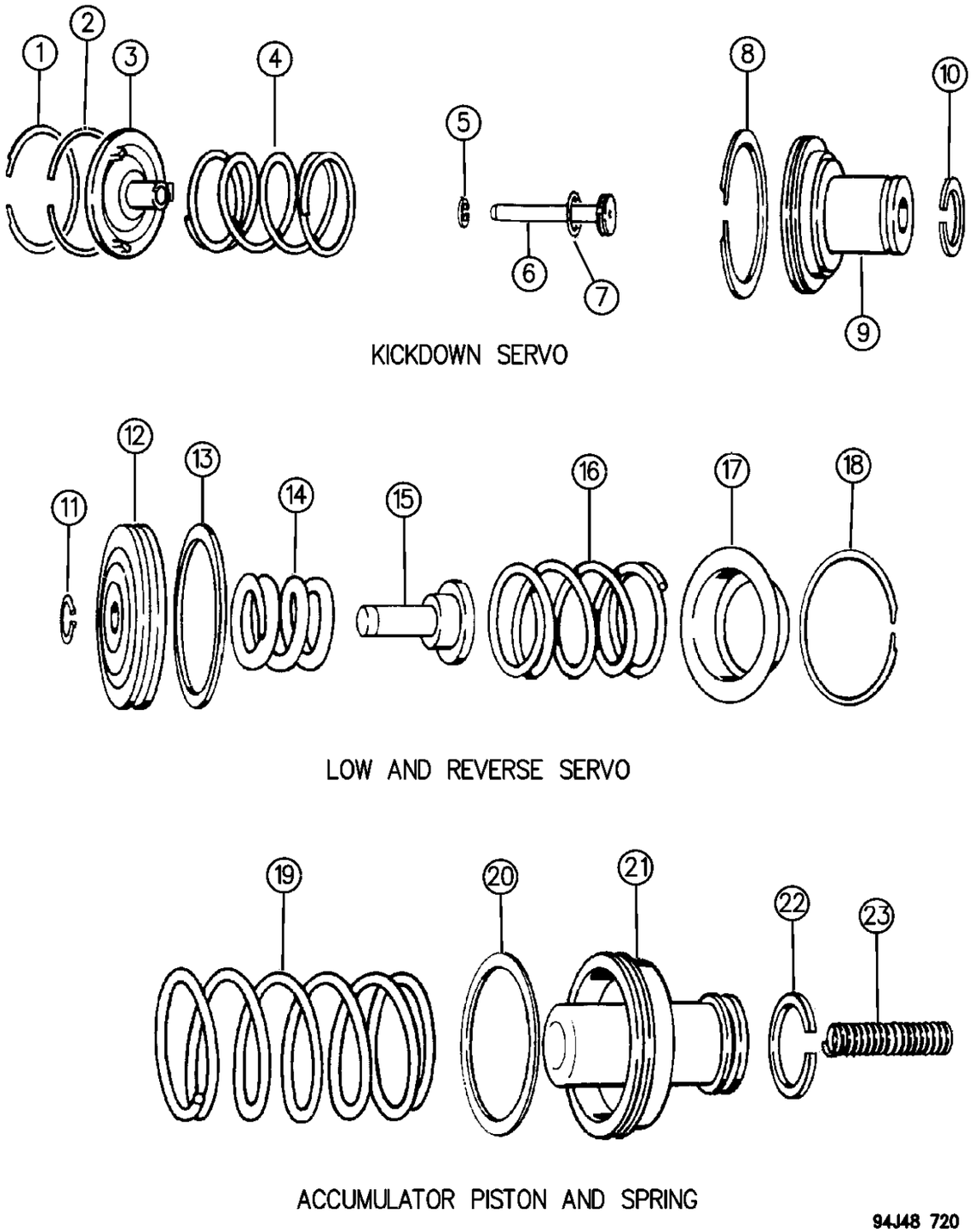

ITEM	PART NUMBER	QTY	BODY	MODEL	DESCRIPTION
1	6028 863	1			SNAP RING, Kickdown Servo Guide
2	4295 966	1			SEAL RING, K/Down Servo Guide ***
3	3410 332				GUIDE, Kickdown Servo
4	4531 119	1			SPRING, K/Down Servo Piston, Outer
5	6034 765	1			SNAP RING, Inner, 1-1/8" I.D.
6	4058 780	1			ROD, Kickdown Servo Piston
7	6028 864	1			SEAL, Inner, 15/16 x 1-1/8" x 3/32"
8	4295 966	1			SEAL RING, K/Down Servo Piston, Large ***
9	4058 777	1			PISTON, Kickdown Servo ***
10	3743 033	1			SEAL RING, K/Down Servo Piston, Small ***
11	6027 153	1			RING, Reverse Servo Piston Plug, 7/16" I.D.
12	2801 271	1			PISTON, Reverse Servo ***
13	4202 864	1			SEAL, Reverse Servo Piston, Rubber
14	4130 824	1			SPRING, Reverse Servo Cushion
15	3743 353	1			PLUG, Reverse Servo Piston
16	2801 274	1			SPRING, Reverse Servo Piston
17	2464 463	1			RETAINER, Reverse Servo Piston Spring
18	2464 464	1			SNAP RING, Reverse Servo Piston Spring Retainer
19	3515 079	1			SPRING, Accumulator
20	3743 013	1			SEAL RING, Accumulator Piston, Large ***
21	3743 650	1			PISTON, Accumulator ***
22	3743 010	1			SEAL RING, Accumulator Piston, Small ***
23	3515 114	1			SPRING, Accumulator, Upper

MODEL CODES:

72=2 DR Wagon
74=4 DR Wagon
77=Open Body 93" Whlbase
78=Open Body 103" Whlbase - Export
T=2WD
J,N=4WD
U=4WD (RHD)

BODY STYLES:

YJ=Wrangler (4X4) "S"
Weangler (4X4) SE
Wrangler (4X4) Sahara
Wrangler (4X4) Renegade
XJ=Cherokee SE
Cherokee Sport
Cherokee Country
ZJ=Grand Cherokee SE
Grand Cherokee Laredo
Grand Cherolee Limited
ZG=Grand Cherokee European
Y1=Wrangler
X1=Cherokee
Z1=Grand Cherokee
KDX=Vehicles

AR = Use as Required - = Non Illustrated Part P.A.R. = Paint as Required

« RETURN TO GROUP INDEX

PARKING SPRAG AUTOMATIC TRANSMISSION, 3 SPEED, 31RH,32RH WRANGLER YJ
Figure 21B-730

21B-730

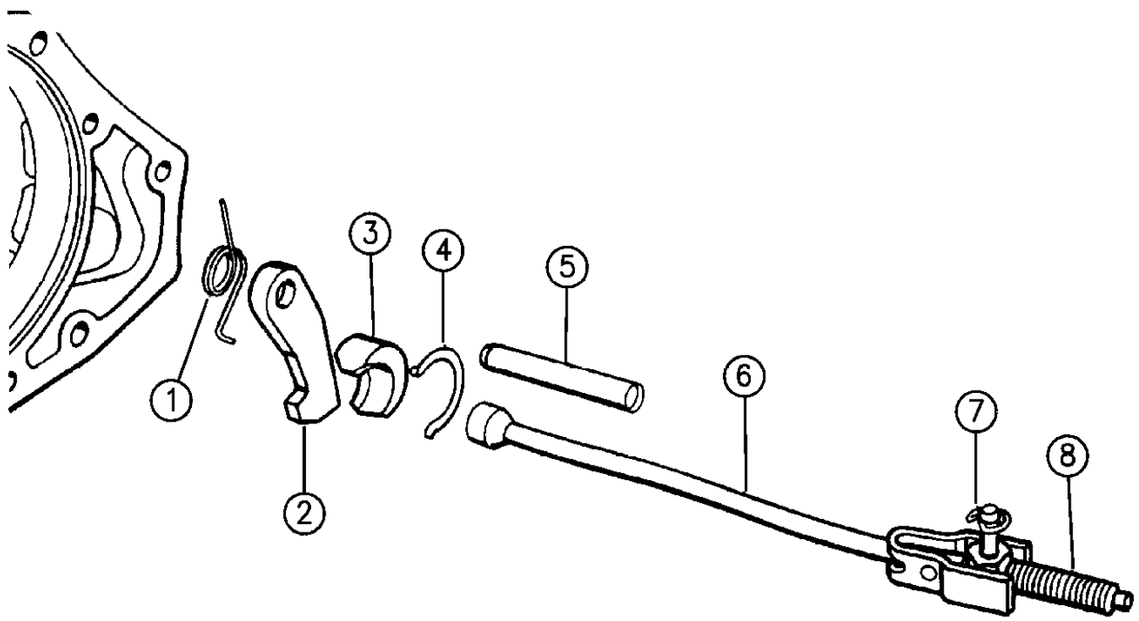

ITEM	PART NUMBER	QTY	BODY	MODEL	DESCRIPTION
1	2466 909	1			SPRING, Trans. Parking Sprag
2	4471 415	1			SPRAG, Trans. Parking, 5/8" Thk. ***
3	2538 042	1			PLUG, Parking Sprag Reaction
4	2538 034	1			SNAP RING, Reaction Plug
5	2466 892	1			SHAFT, Trans. Parking Sprag
6	2466 906	1			ROD ASSEMBLY, Parking Sprag, 8" Lg. ***
7	1626 749	1			E-RING, Rod
8		1			SPRING, (Serviced in Parking Sprag Rod Assy.)

MODEL CODES:

72=2 DR Wagon
74=4 DR Wagon
77=Open Body 93" Whlbase
78=Open Body 103" Whlbase - Export
T=2WD
J,N=4WD
U=4WD (RHD)

BODY STYLES:

YJ=Wrangler (4X4) "S"
Weangler (4X4) SE
Wrangler (4X4) Sahara
Wrangler (4X4) Renegade
XJ=Cherokee SE
Cherokee Sport
Cherokee Country
ZJ=Grand Cherokee SE
Grand Cherokee Laredo
Grand Cherolee Limited
ZG=Grand Cherokee European
Y1=Wrangler
X1=Cherokee
Z1=Grand Cherokee
KDX=Vehicles

AR = Use as Required - = Non Illustrated Part P.A.R. = Paint as Required

« RETURN TO GROUP INDEX

CONTROLS, SHIFT, LOWER, COLUMN AUTOMATIC TRANSMISSION, 31RH,32RH WRANGLER YJ
Figure 21B-1210

21B-1210

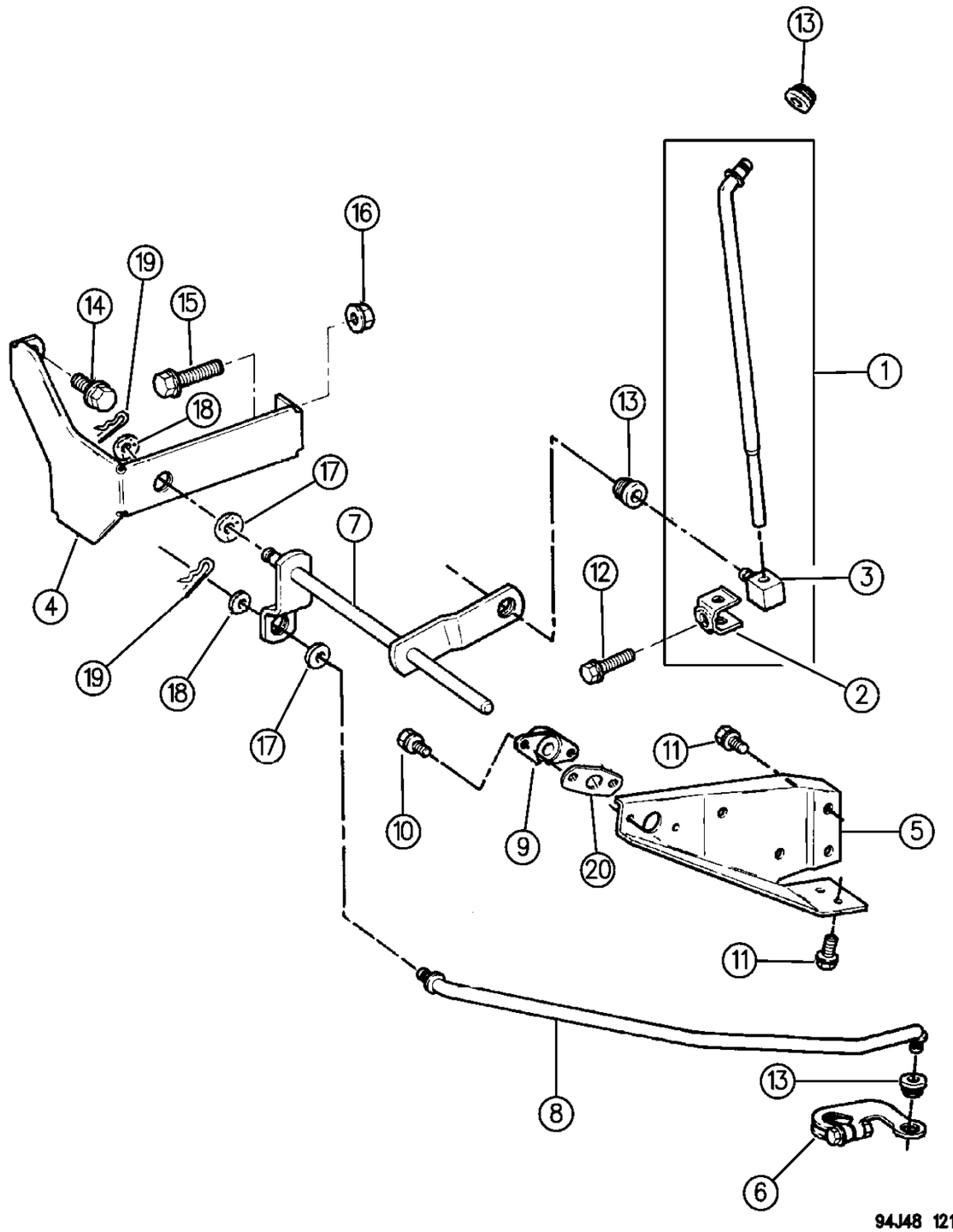

ITEM	PART NUMBER	QTY	BODY	MODEL	DESCRIPTION
1	5204 0190	1			ROD, Gear Selector
2	4377 309	1			CLAMP
3	J323 8417	1			TRUNNION, Selector Rod ***
4					BRACKET, Torque Shaft, Inner
	5207 8364	1			w/2.5L Engine
	5300 8528	1			W/4.0L Engine
5	5300 2020	1			BRACKET, Torque Shaft, Outer
6	5300 2026	1			LEVER, G/Shift Control
7	5207 8135	1			SHAFT, Torque Column Shift
8	5300 8530	1			ROD, Selector Lever
9	5207 8134	1			BEARING, Torque Shaft
10	J942 6241	2			SCREW, 1/4-14 x 1/2"
11	6032 953	4			SCREW, 5/16-18 x 3/4"
12	J400 6036	1			BOLT, 5/16-18 x 1/2"
13	3575 333	3			BUSHING, Rod End
14	J400 7155	2			BOLT
15	J941 9076	1			BOLT, 7/16-14 x 1-3/8"
16	J400 4005	1			NUT, 7/16-14
17	0391 888	2			WASHER, Spring
18	J012 0393	2			WASHER, Flat
19	J400 4295	2			PIN, Hair
20	5300 5154	1			GASKET, Bearing Isolation

MODEL CODES:

72=2 DR Wagon
74=4 DR Wagon
77=Open Body 93" Whlbase
78=Open Body 103" Whlbase - Export
T=2WD
J,N=4WD
U=4WD (RHD)

BODY STYLES:

YJ=Wrangler (4X4) "S"
Weangler (4X4) SE
Wrangler (4X4) Sahara
Wrangler (4X4) Renegade
XJ=Cherokee SE
Cherokee Sport
Cherokee Country
ZJ=Grand Cherokee SE
Grand Cherokee Laredo
Grand Cherolee Limited
ZG=Grand Cherokee European
Y1=Wrangler
X1=Cherokee
Z1=Grand Cherokee
KDX=Vehicles

AR = Use as Required - = Non Illustrated Part P.A.R. = Paint as Required

« RETURN TO GROUP INDEX

SAGIPARTS

GROUP-21C
AUTOMATIC TRANSMISSION (42RE)

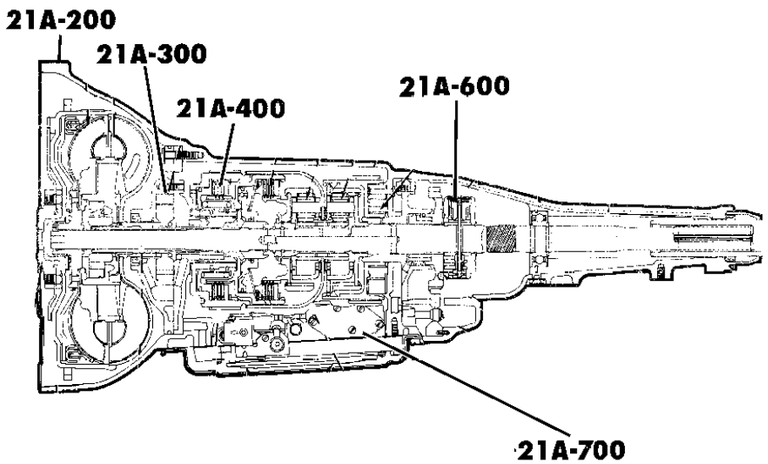

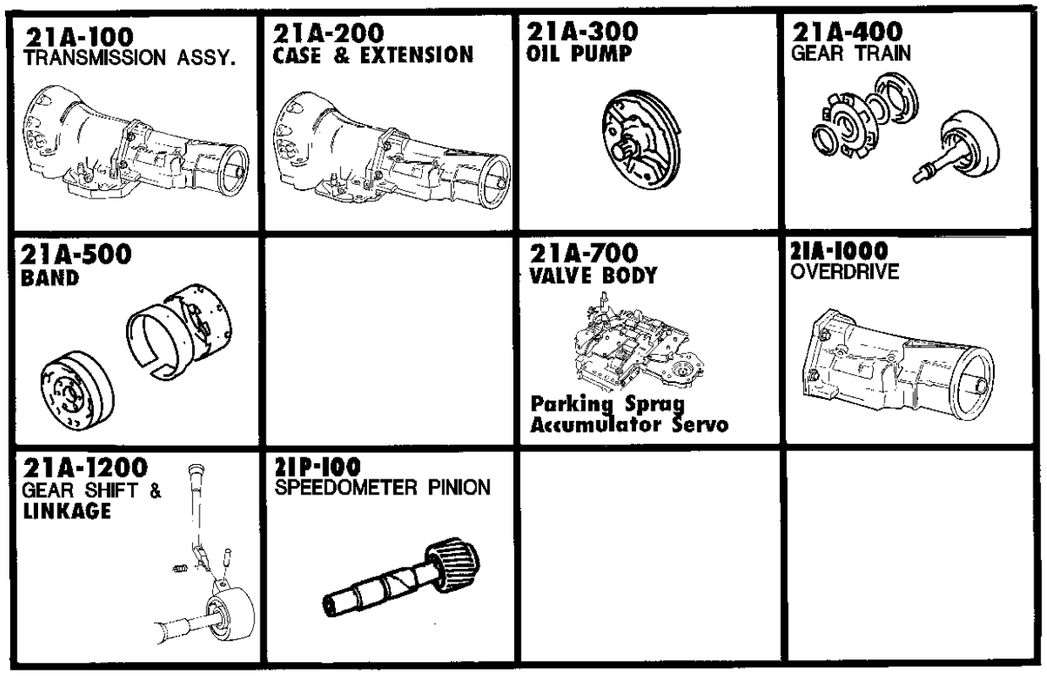

GROUP 21C - TRANS. AUTO 42RE 4 SPEED

ILLUSTRATION TITLE — **GROUP-FIG. NO.**

TRANSMISSION ASSEMBLY
TRANSMISSION ASSEMBLY AUTOMATIC TRANSMISSION, 4 SPEED, 42RE GRAND CHEROKEE ZJ .... Fig. 21C-110

CASE AND EXTENSION
CASE, AND RELATED PARTS AUTOMATIC TRANSMISSION, 4 SPEED, 42RE GRAND CHEROKEE ZJ ... Fig. 21C-210
EXTENSION AUTOMATIC TRANSMISSION, 4 SPEED, 42RE GRAND CHEROKEE ZJ ..... Fig. 21C-220

OIL PUMP
PUMP, OIL WITH REACTION SHAFT AUTOMATIC TRANSMISSION, 4 SPEED, 42RE GRAND CHEROKEE ZJ ..... Fig. 21C-310

GEAR TRAIN
CLUTCH, FRONT AND REAR WITH GEAR TRAIN AUTOMATIC TRANSMISSION, 4 SPEED, 42RE GRAND CHEROKEE ZJ ..... Fig. 21C-410
GEAR TRAIN AND INTERMEDIATE SHAFT AUTOMATIC TRANSMISSION, 4 SPEED, 42RE GRAND CHEROKEE ZJ ..... Fig. 21C-420
OUTPUT SHAFT AUTOMATIC TRANSMISSION, 4 SPEED, 42RE GRAND CHEROKEE ZJ ..... Fig. 21C-430

BANDS, REVERSE AND KICKDOWN
BANDS, REVERSE AND KICKDOWN WITH LINKAGE AUTOMATIC TRANSMISSION, 4 SPEED, 42RE GRAND CHEROKEE ZJ ..... Fig. 21C-510

VALVE BODY, SERVO AND PARKING BRAKE
VALVE BODY AUTOMATIC TRANSMISSION, 4 SPEED, 42RE GRAND CHEROKEE ZJ ..... Fig. 21C-710
SERVOS, ACCUMULATOR PISTON AND SPRING AUTOMATIC TRANSMISSION, 4 SPEED, 42RE GRAND CHEROKEE ZJ ..... Fig. 21C-720
PARKING SPRAG AUTOMATIC TRANSMISSION, 4 SPEED, 42RE GRAND CHEROKEE ZJ ..... Fig. 21C-730

OVERDRIVE, GEAR TRAIN
CLUTCH, OVERDRIVE WITH GEAR TRAIN AUTOMATIC TRANSMISSION, 4 SPEED, 42RE GRAND CHEROKEE ZJ ..... Fig. 21C-1010

GEARSHIFT CONTROLS
CONTROLS, GEARSHIFT, FLOOR MOUNTED AUTOMATIC TRANSMISSION, 4 SPEED, 42RE GRAND CHEROKEE, ZJ ..... Fig. 21C-1210

TRANSMISSION ASSEMBLY AUTOMATIC TRANSMISSION, 4 SPEED, 42RE GRAND CHEROKEE ZJ
Figure 21C-110

21C-110

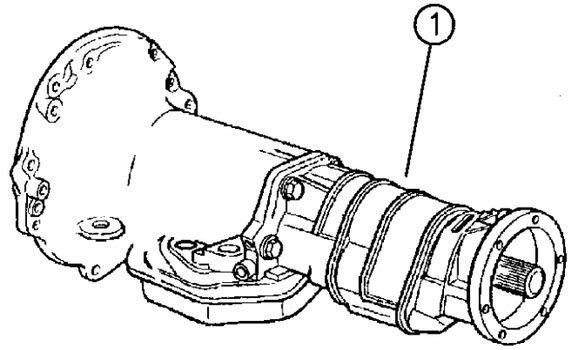

94J50 110

ITEM	PART NUMBER	QTY	BODY	MODEL	DESCRIPTION
1					TRANSMISSION ASSEMBLY, Complete w/Overdrive Assy., 4 Speed Auto., Electric Shift, 42RE ***
	5211 8353	1		2WD	4.0L Engine
	5211 9162	1			
	5211 8423	1		2WD	
					4.0L Engine
	5211 8354	1		4WD	Before 1/13/95
	5211 9163	1		4WD	After 1/13/95
	5211 8354	1	ZG		Before 3/13/95
	5211 9163	1	ZG		After 3/13/95
	5211 8424	1		4WD	1996 ***
					OVERDRIVE ASSEMBLY, 42RE Rear Unit w/Extension ***
	4617 570	1		2WD	4.0L Engine
	4617 860	1		4WD	
	5211 8154	1			w/52118424

MODEL CODES:

72=2 DR Wagon
74=4 DR Wagon
77=Open Body 93" Whlbase
78=Open Body 103" Whlbase - Export
T=2WD
J,N=4WD
U=4WD (RHD)

BODY STYLES:

YJ=Wrangler (4X4) "S"
Weangler (4X4) SE
Wrangler (4X4) Sahara
Wrangler (4X4) Renegade
XJ=Cherokee SE
Cherokee Sport
Cherokee Country
ZJ=Grand Cherokee SE
Grand Cherokee Laredo
Grand Cherolee Limited
ZG=Grand Cherokee European
Y1=Wrangler
X1=Cherokee
Z1=Grand Cherokee
KDX=Vehicles

AR = Use as Required - = Non Illustrated Part P.A.R. = Paint as Required

CASE, AND RELATED PARTS AUTOMATIC TRANSMISSION, 4 SPEED, 42RE GRAND CHEROKEE ZJ
Figure 21C-210

21C-210

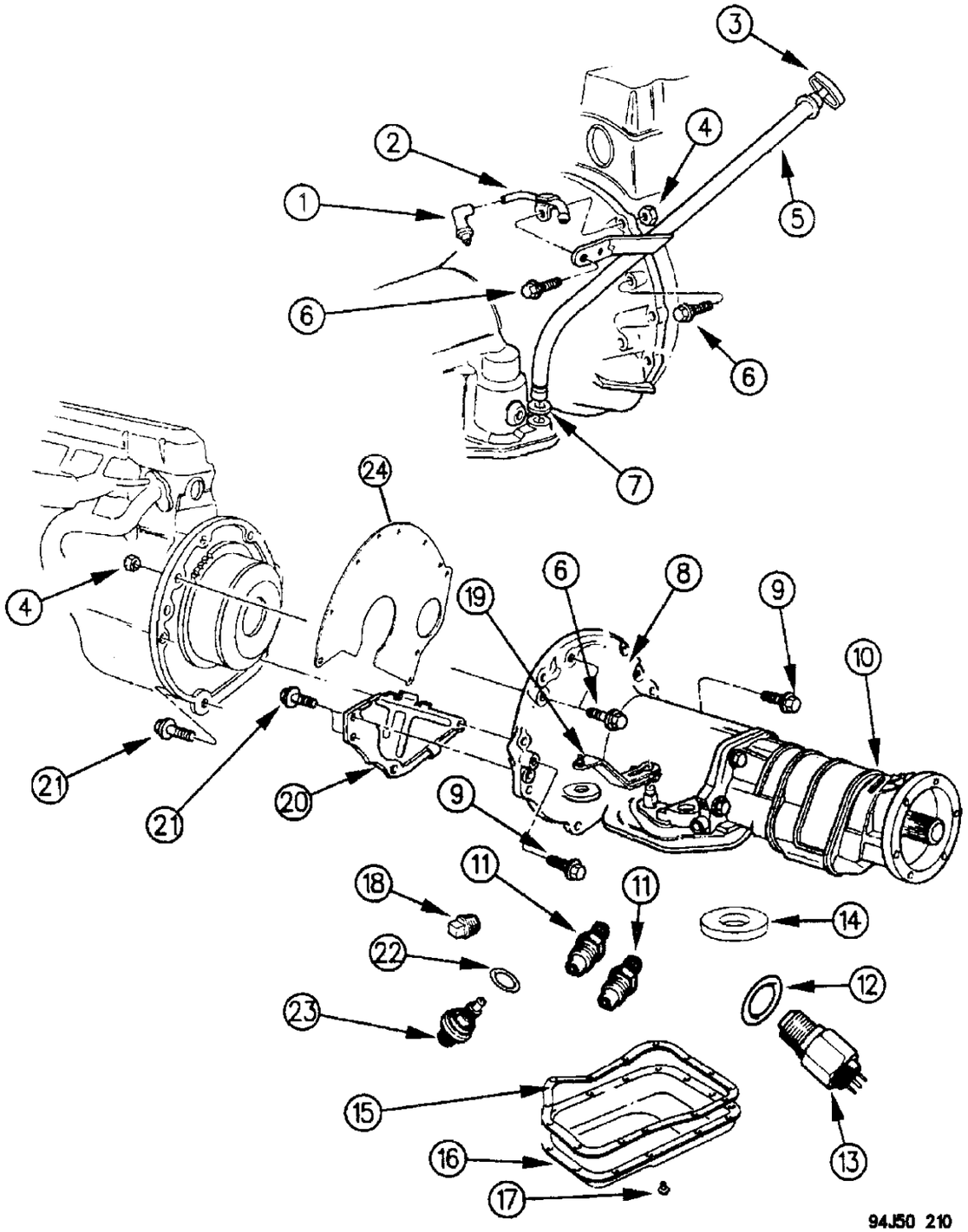

ITEM	PART NUMBER	QTY	BODY	MODEL	DESCRIPTION
					GASKET and SEAL PACKAGE, 42RE, Major Repair ***
	4746 377	1			1994-95 ***
	4863 907	1			1996 ***
					Consists Of:
					1 - 4713108 GASKET & SEAL PKG., Front Pump
					1 - 4746122 GASKET & SEAL PKG., Valve Body & Servo 1994-95
					1- 4863933 GASKET & SEAL PACKAGE. Valve Body & Servo 1996
					1 - 5252926 GASKET & SEAL PKG., Frt. & Rr. Clutch
					1 - 4713938 GASKET & SEAL PKG., Governor & Ext. 1994-95
	4713 938	1			GASKET and SEAL PACKAGE, Overdrive Assembly, 42RE
					Consists Of:
					1 - 2801398 GASKET, O/P Shaft Brg. Cover
					1 - 3743519 FILTER, Gov., Oil
					1 - 4269956 SEAL, Trans. Adapter
					3 - 4461143 SEAL RINGS, Gov. Drive
					1 - 4531192 GASKET, O/Drive Assy. to Case
					1 - 4531216 SEAL, Extension Oil
1	5209 7701	1			HOSE, And Filter Assy.
2		1			TUBE, w/Clip Transfer Case Vent (Not Serviced)
3	5211 7710	1			INDICATOR, Trans. Oil Level
4	J021 9422	2			NUT, 3/8-16
5					TUBE, Trans. Oil Filler
	5211 7572	1			1994
	5211 8472	1			1995
	5211 8628	1			1996
6	J400 1885	4			SCREW, Case Mounting, 3/8-16 x 2-1/8"
7	6030 608	1			SEAL, Oil Filler Tube
	5211 8629	1			W/52118628
8	4617 232	1			CASE, Transmission, Use w/52118028,9027 Trans. ***
	5211 8291	1			w/52118353,52118354,52119162,52119163,52118424, 52118423 Transmission
9	J400 4370	2			SCREW, Case Mtg., 7/16-14 x 2-3/4"
10		1			EXTENSION, or Adapter Trans. Case (Refer to Illus.220)
11	4617 517	2			CONNECTOR, Trans. Oil Cooler Quick Disconnect, 1/4-18 Pipe Thread (For 3/8 Tubing)
12	2408 143	1			WASHER, B/U Light Switch
13	3747 361	1			SWITCH, w/Washer, Neutral Starter and B/U Light, w/3 Prongs
14	3681 601	1			MAGNET, Case Chip Collector
15	4295 875	1			GASKET, Oil Pan
16	4617 220	1			PAN, Trans. Oil

MODEL CODES:

72=2 DR Wagon
74=4 DR Wagon
77=Open Body 93" Whlbase
78=Open Body 103" Whlbase - Export
T=2WD
J,N=4WD
U=4WD (RHD)

BODY STYLES:

YJ=Wrangler (4X4) "S"
Weangler (4X4) SE
Wrangler (4X4) Sahara
Wrangler (4X4) Renegade
XJ=Cherokee SE
Cherokee Sport
Cherokee Country
ZJ=Grand Cherokee SE
Grand Cherokee Laredo
Grand Cherolee Limited
ZG=Grand Cherokee European
Y1=Wrangler
X1=Cherokee
Z1=Grand Cherokee
KDX=Vehicles

AR = Use as Required - = Non Illustrated Part P.A.R. = Paint as Required

CASE, AND RELATED PARTS AUTOMATIC TRANSMISSION, 4 SPEED, 42RE GRAND CHEROKEE ZJ
Figure 21C-210

21C-210

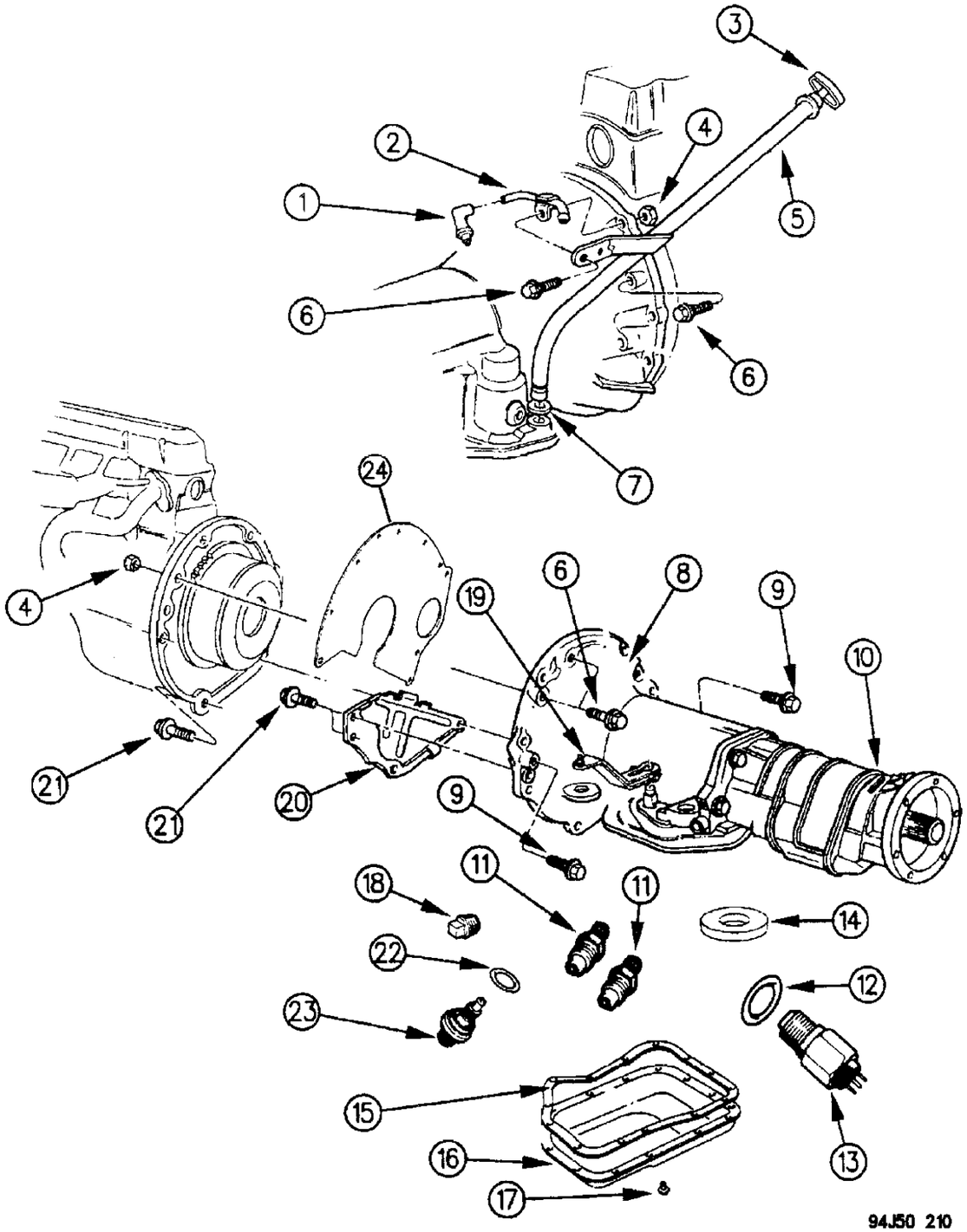

ITEM	PART NUMBER	QTY	BODY	MODEL	DESCRIPTION
17	4723 548	14			SCREW, w/Washer Oil Pan
18	6028 095	AR			PLUG, Pressure Check, 1/8-27 Pipe
19					LEVER, Manual Control
	5207 8251	1			1994
	5207 9168	1			1995-96
20	J321 3744	1			COVER, Case Dust Shield, Lower
21	J400 0987	3			SCREW, w/Washer, Case Cover, 5/16-18 x 5/8"
22	6501 701	1			O-RING, Speed Sensor (24mm)
23	4412 879	1			SENSOR, Output Speed (24mm)
24	J323 7847	1			SPACER, Trans. to Eng. Block, Upper

MODEL CODES:

72=2 DR Wagon
74=4 DR Wagon
77=Open Body 93" Whlbase
78=Open Body 103" Whlbase - Export
T=2WD
J,N=4WD
U=4WD (RHD)

BODY STYLES:

YJ=Wrangler (4X4) "S"
Weangler (4X4) SE
Wrangler (4X4) Sahara
Wrangler (4X4) Renegade
XJ=Cherokee SE
Cherokee Sport
Cherokee Country
ZJ=Grand Cherokee SE
Grand Cherokee Laredo
Grand Cherolee Limited
ZG=Grand Cherokee European
Y1=Wrangler
X1=Cherokee
Z1=Grand Cherokee
KDX=Vehicles

AR = Use as Required - = Non Illustrated Part P.A.R. = Paint as Required

EXTENSION AUTOMATIC TRANSMISSION, 4 SPEED, 42RE GRAND CHEROKEE ZJ
Figure 21C-220

21C-220

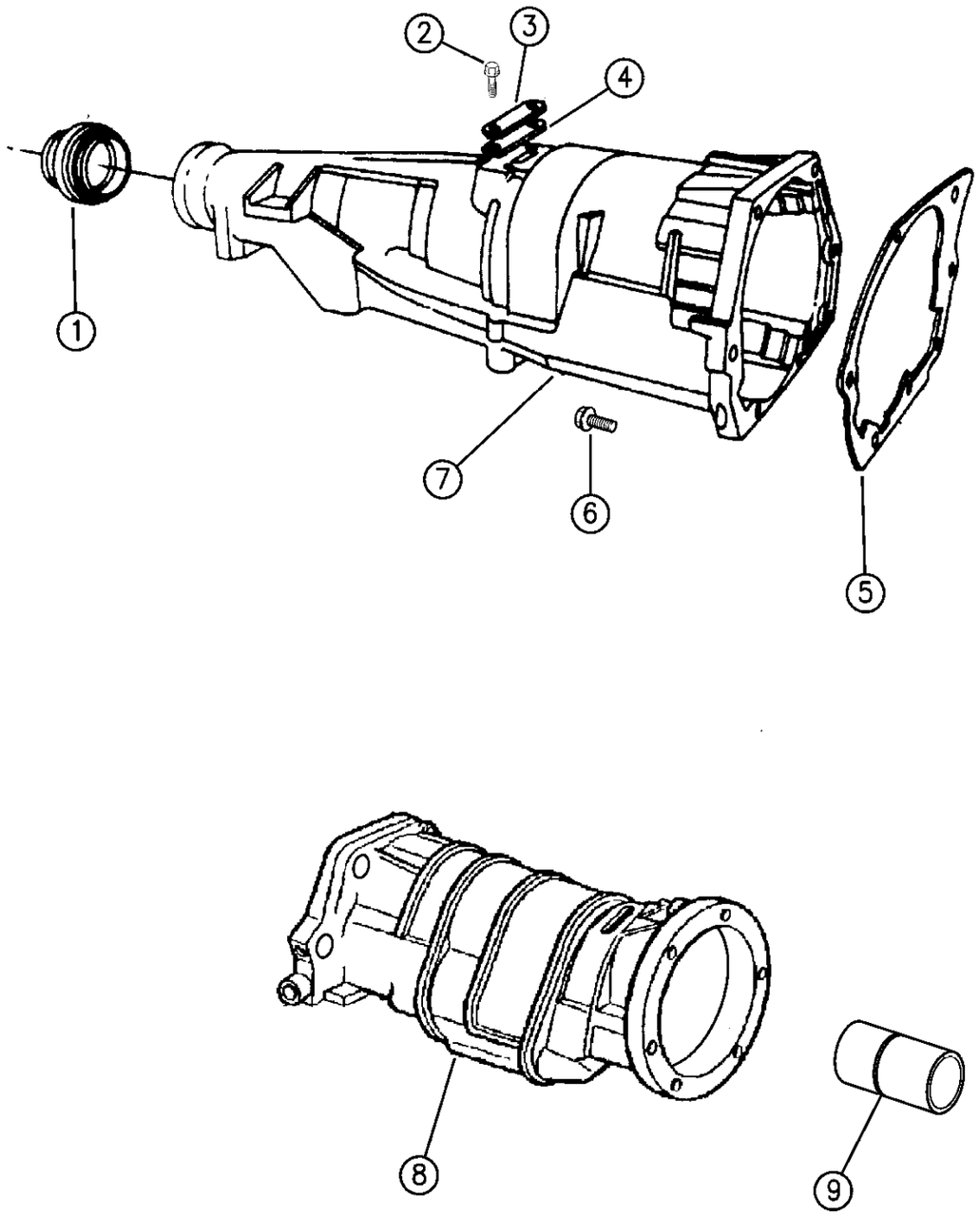

ITEM	PART NUMBER	QTY	BODY	MODEL	DESCRIPTION
1	4531 216	1		2WD	OIL SEAL, Extension Yoke ***
	4269 956	1		4WD	Adapter, 2.56" O.D.
2		2			SCREW, Cover, 1/4-20 x 5/8" (Not Serviced)
3	2466 957	1			COVER, Ext. Bearing
4	2801 398	1			GASKET, Cover
5	4471 564	1			GASKET, Extension or Adapter
6	6033 745	6			SCREW, Ext. to Case, 3/8-16 x 1-1/2"
	6034 224	1			3/8-16 x 2-1/4"
7	4461 184	1		2WD	EXTENSION, w/Bushing, Case
8	4461 135	1		4WD	ADAPTER, Case
9	5210 7563	1		2WD	OIL SEAL, Trans. Extension ***

MODEL CODES:

72=2 DR Wagon
74=4 DR Wagon
77=Open Body 93" Whlbase
78=Open Body 103" Whlbase - Export
T=2WD
J,N=4WD
U=4WD (RHD)

BODY STYLES:

YJ=Wrangler (4X4) "S"
Weangler (4X4) SE
Wrangler (4X4) Sahara
Wrangler (4X4) Renegade

XJ=Cherokee SE
Cherokee Sport
Cherokee Country

ZJ=Grand Cherokee SE
Grand Cherokee Laredo
Grand Cherolee Limited
ZG=Grand Cherokee European

Y1=Wrangler
X1=Cherokee
Z1=Grand Cherokee
KDX=Vehicles

AR = Use as Required - = Non Illustrated Part P.A.R. = Paint as Required

« RETURN TO GROUP INDEX

PUMP, OIL WITH REACTION SHAFT AUTOMATIC TRANSMISSION, 4 SPEED, 42RE GRAND CHEROKEE ZJ
Figure 21C-310

21C-310

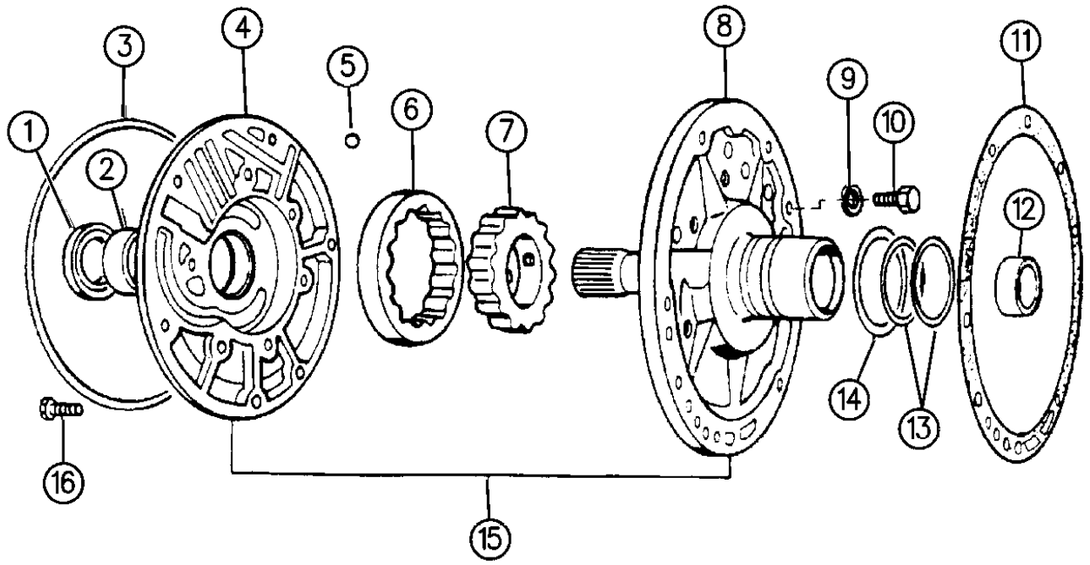

ITEM	PART NUMBER	QTY	BODY	MODEL	DESCRIPTION
	4713 108	1			GASKET and SEAL PACKAGE, Repair Front Pump
					Consists Of:
					1 - 4412475 SEAL, T/C Impeller Hub
					1 - 2204709 SEAL, Oil Pump Hsg.
					2 - 4471874 SEAL RING, Reaction Shaft Support
					2 - 1401221 SEAL RING, Input Shaft Front
					1 - 4028333 SEAL RING, Rr. Clutch Retainer
					1 - 4617840 GASKET, T/C Reaction Shaft Support
					1 - K685-2070 Instruction Sheet
1	4412 475	1			SEAL, T/C Impeller Hub, 57.25mm O.D.
2	2466 796	1			BUSHING, Frt. Pump Hsg.
3	2204 709	1			SEAL, Frt. Pump Hsg. 8-17/64" O.D.
4		1			HOUSING, w/Bushing, Rotors and Seal, Frt. Pump (Serviced in Assy. Item No. 15)
5	0104 918	AR			BALL, Reaction Shaft Suppt., 1/4" Dia.
6		1			ROTOR, (Serviced in Assy.)
7		1			ROTOR, (Serviced in Assy.)
8		1			SHAFT, w/Support, Reaction (Serviced in Item No. 15)
9		6			LOCK WASHER, (Not Serviced) ***
10	0179 815	6			SCREW, Support, 5/16-18 x 11/16"
11	4617 840	1			GASKET, Reaction Shaft Support
12	4058 635	1			BUSHING, Reaction Shaft
13	4471 874	2			RING, Seal Reaction Shaft Support, 2-1/16" I.D.
14	4617 786	2			WASHER, Frt. Clutch Thrust
15	4740 268	1			PUMP ASSEMBLY, Oil, Housing, Support and Reaction Shaft, w/ Lock-Up
16	6023 943	6			SCREW, w/Washer, Hsg. 5/16-18 x 1-3/8"

MODEL CODES:

72=2 DR Wagon
74=4 DR Wagon
77=Open Body 93" Whlbase
78=Open Body 103" Whlbase - Export
T=2WD
J,N=4WD
U=4WD (RHD)

BODY STYLES:

YJ=Wrangler (4X4) "S"
Weangler (4X4) SE
Wrangler (4X4) Sahara
Wrangler (4X4) Renegade
XJ=Cherokee SE
Cherokee Sport
Cherokee Country
ZJ=Grand Cherokee SE
Grand Cherokee Laredo
Grand Cherolee Limited
ZG=Grand Cherokee European
Y1=Wrangler
X1=Cherokee
Z1=Grand Cherokee
KDX=Vehicles

AR = Use as Required - = Non Illustrated Part P.A.R. = Paint as Required

« RETURN TO GROUP INDEX

CLUTCH, FRONT AND REAR WITH GEAR TRAIN AUTOMATIC TRANSMISSION, 4 SPEED, 42RE GRAND CHEROKEE ZJ
Figure 21C-410

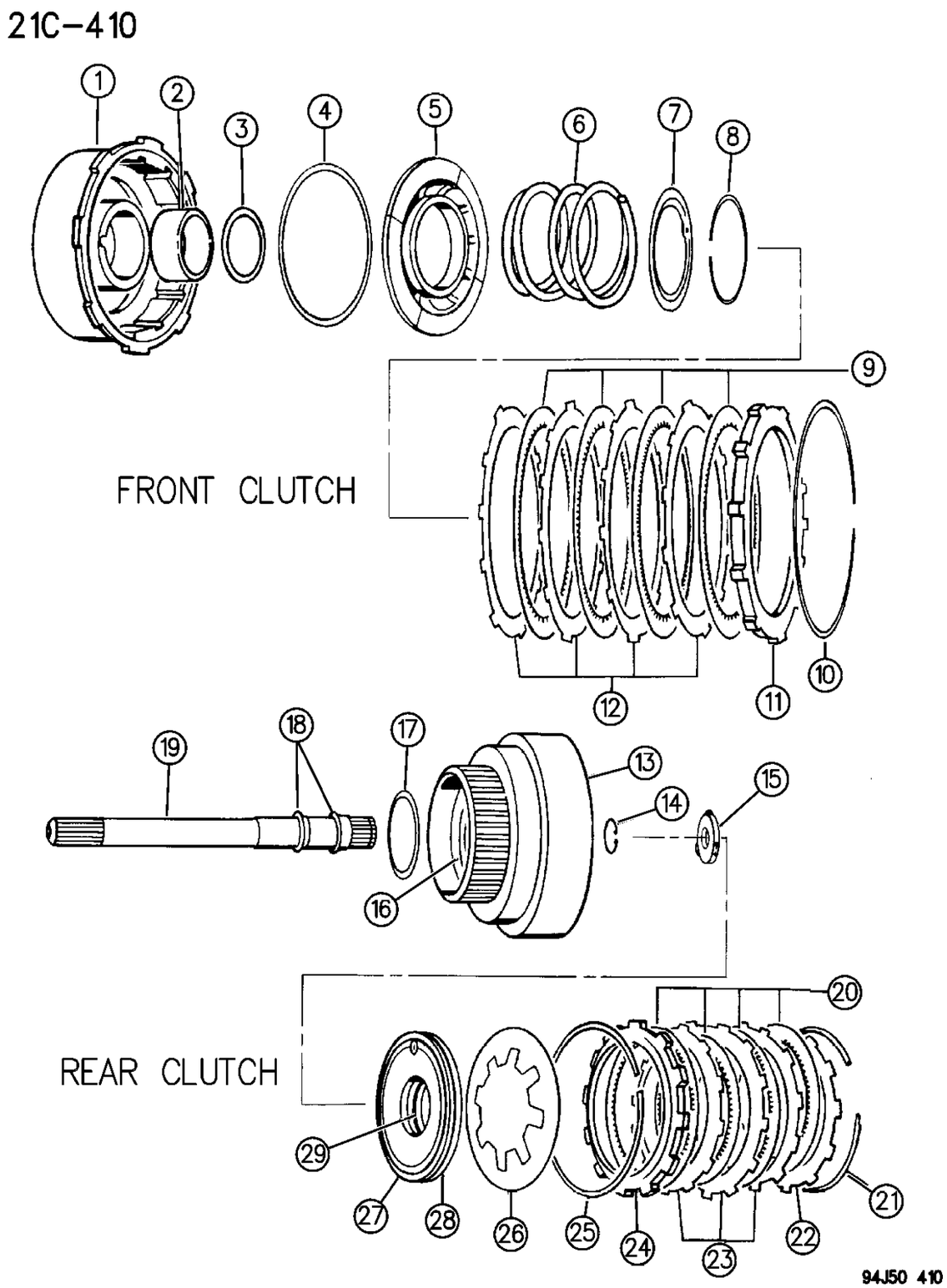

ITEM	PART NUMBER	QTY	BODY	MODEL	DESCRIPTION
	5252 926	1			SEAL and WASHER PACKAGE, Front and Rear Clutch
					Consists Of:
					1 - 3515176 SEAL, Frt.Clutch Piston, Inner
					1 - 4058487 SEAL, Frt.Clutch Piston, Outer
					1 - 2538510 SEAL, Rear Clutch Piston, Inner
					1 - 2538695 SEAL, Rear Clutch Piston, Outer
					1 - 4505185 WASHER, Intermediate Shaft Thrust
					1 - 4505186 WASHER, Intermediate Shaft Thrust
					1 - 4505187 WASHER, Intermediate Shaft Thrust
					1 - 4058982 PLATE, Intermediate Shaft Thrust
1	4531 285	1			RETAINER, w/Bushings, w/o Seals Frt. Clutch
	4617 409	1			w/52118353 ***
2	4617 157	1			BUSHING, Frt. Clutch Retainer, Front
	4617 159	1			Rear
3	3515 176	1			SEAL, Frt. Clutch Piston, Rubber, Inner
4	4058 487	1			SEAL, Frt. Clutch Piston, Outer
5	4617 154	1			PISTON, Frt. Clutch
	0147 483	1			BALL, 3/16" Dia.
6	4329 809	1			SPRING, Frt. Clutch Piston, Blue
7	4617 516	1			RETAINER, Frt. Clutch Piston Spring
	0147 483	1			BALL, Check Valve, 3/16" Dia.
8	1942 400	1			SNAP RING, Frt. Clutch Inner, 2-7/16" O.D.
9	4617 362	4			DISC, Frt. Clutch
10	3410 571	1			SNAP RING, Frt. Clutch, Outer
11	4617 176	1			PLATE, Frt. Clutch Pressure
12	1942 403	4			PLATE, Frt. Clutch
13	4505 199	1			RETAINER, Rear Clutch
	0147 483	1			BALL, Check Valve, 3/16" Dia.
14	6022 859	1			SNAP RING, Input Shaft 57/64", .059" Thk.
15					WASHER, Intermediate Shaft Thrust, w/3 Point Bronze Face
	4505 185	AR			.052" Thk., Gray
	4505 186	AR			.068" Thk., Red
	4505 187	AR			.083" Thk., Green
16	4028 333	1			SEAL, Rear Cl. Retainer Ring, 1-1/2" O.D., .009 Thk.
17	4617 786	2			WASHER, Frt. Clutch Thrust, 2-5/8" O.D.
18	1401 221	2			RING, Input Shaft Seal, Frt. and Rear
19	4505 189	1			SHAFT, Input
20	4713 880	4			DISC, Rear Clutch
21					SNAP RING, Rear Cl. Retainer, 5-11/32" O.D.
	4130 761	AR			.060" Thk.
	4539 121	AR			.076" Thk.
	4539 122	AR			.098" Thk.

MODEL CODES:

72=2 DR Wagon
74=4 DR Wagon
77=Open Body 93" Whlbase
78=Open Body 103" Whlbase - Export
T=2WD
J,N=4WD
U=4WD (RHD)

BODY STYLES:

YJ=Wrangler (4X4) "S"
Weangler (4X4) SE
Wrangler (4X4) Sahara
Wrangler (4X4) Renegade
XJ=Cherokee SE
Cherokee Sport
Cherokee Country
ZJ=Grand Cherokee SE
Grand Cherokee Laredo
Grand Cherolee Limited
ZG=Grand Cherokee European
Y1=Wrangler
X1=Cherokee
Z1=Grand Cherokee
KDX=Vehicles

AR = Use as Required - = Non Illustrated Part P.A.R. = Paint as Required

CLUTCH, FRONT AND REAR WITH GEAR TRAIN AUTOMATIC TRANSMISSION, 4 SPEED, 42RE GRAND CHEROKEE ZJ
Figure 21C-410

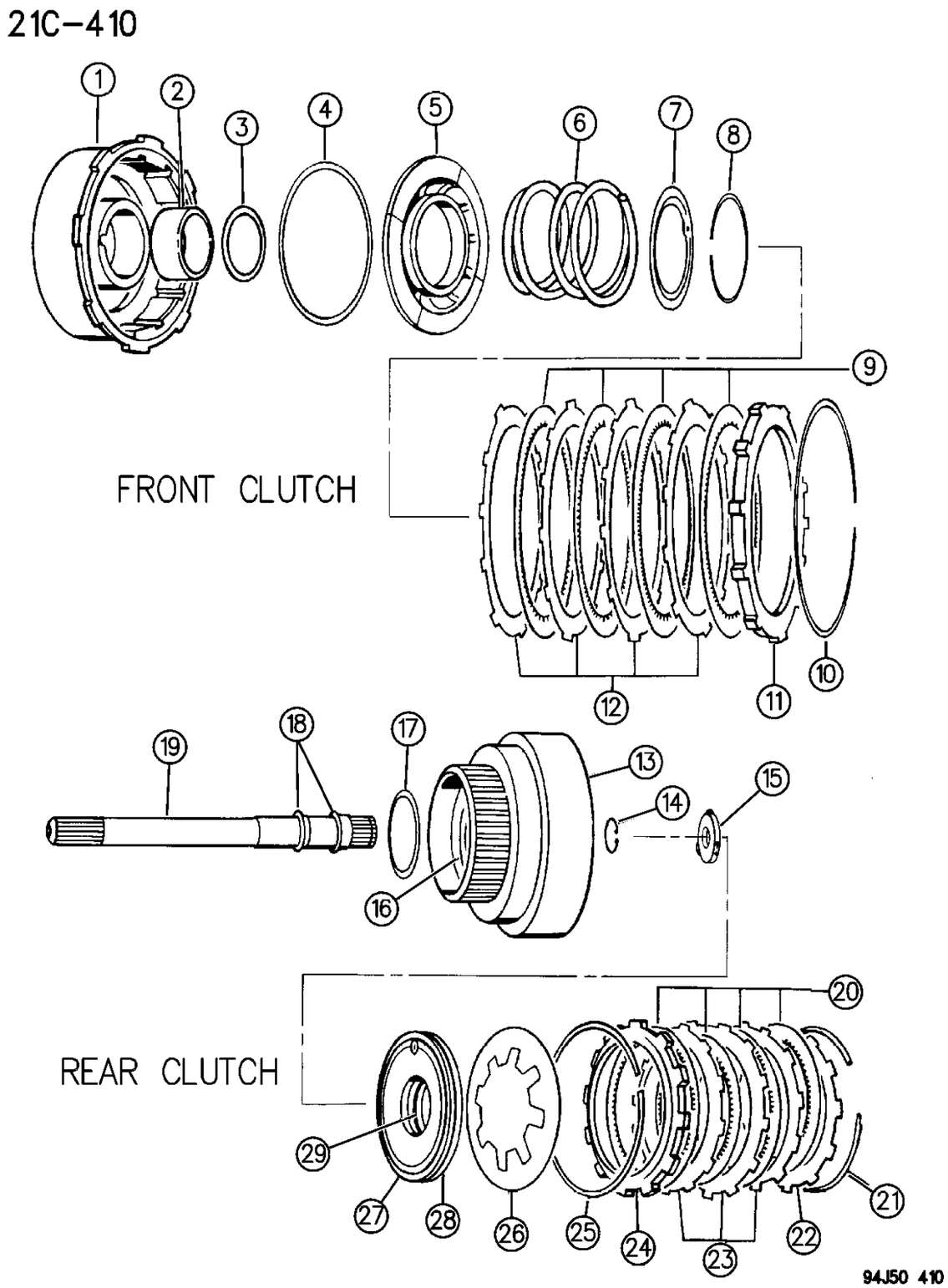

ITEM	PART NUMBER	QTY	BODY	MODEL	DESCRIPTION
	4539 123	AR			.095" Thick
	4539 124	AR			.107" Thick
22	4617 176	1			PLATE, Rr. Clutch Pressure, Rear
23	1942 403	3			PLATE, Rear Clutch
24	2466 281	1			PLATE, Rear Clutch Pressure, Front
25	2466 283	1			SPRING, Rear Clutch Wave
26	4617 191	1			SPRING, Rear Clutch Piston
27	2538 695	1			SEAL, Rear Clutch Piston, Rubber, Outer
28	3515 716	1			PISTON, Rear Clutch
29	2538 510	1			SEAL, Rear Clutch Piston, Rubber, Inner

MODEL CODES:

72=2 DR Wagon
74=4 DR Wagon
77=Open Body 93" Whlbase
78=Open Body 103" Whlbase - Export
T=2WD
J,N=4WD
U=4WD (RHD)

BODY STYLES:

YJ=Wrangler (4X4) "S"
Weangler (4X4) SE
Wrangler (4X4) Sahara
Wrangler (4X4) Renegade
XJ=Cherokee SE
Cherokee Sport
Cherokee Country
ZJ=Grand Cherokee SE
Grand Cherokee Laredo
Grand Cherolee Limited
ZG=Grand Cherokee European
Y1=Wrangler
X1=Cherokee
Z1=Grand Cherokee
KDX=Vehicles

AR = Use as Required - = Non Illustrated Part P.A.R. = Paint as Required

GEAR TRAIN AND INTERMEDIATE SHAFT AUTOMATIC TRANSMISSION, 4 SPEED, 42RE GRAND CHEROKEE ZJ
Figure 21C-420

21C-420B

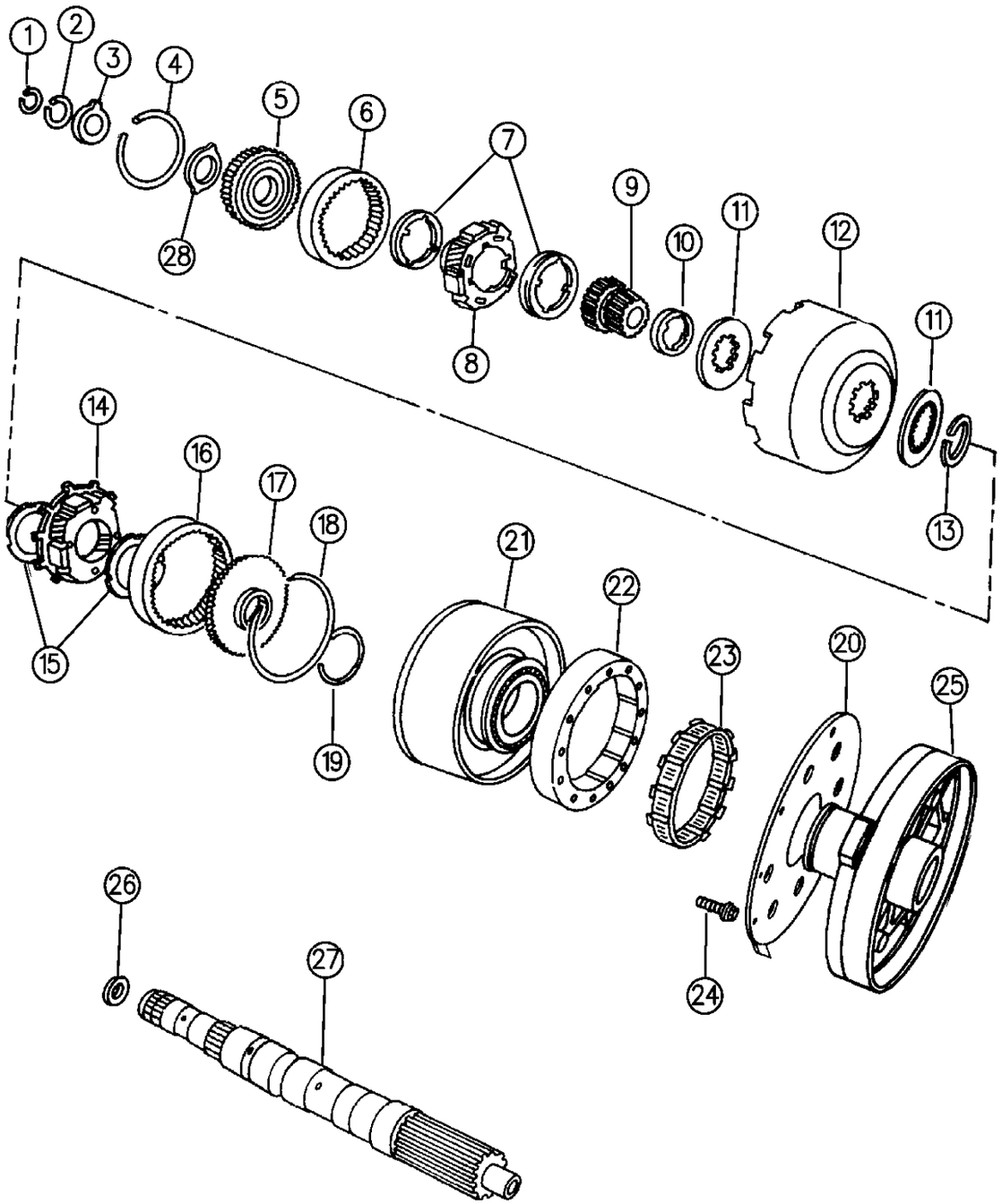

ITEM	PART NUMBER	QTY	BODY	MODEL	DESCRIPTION
1					SNAP RING, Intermediate Shaft
	6026 289	AR			.946" I.D., .040" Thk.
	6030 938	AR			.910" I.D., .062" Thk.
	6030 404	AR			.906" I.D., .084" Thk.
2	6030 576	1			SNAP RING, Frt. Annulus Gear Support, 1-3/8" I.D.
3	3681 969	1			WASHER, Frt. Annulus Gear Support, Thrust w/Lip, 2-1/8" O.D.
4	4130 513	1			SNAP RING, Frt. Annulus Gear, 4-5/8" O.D.
5	4617 774	1			SUPPORT, w/Bushing, Frt. Annulus Gear
6	4130 512	1			GEAR, Front Annulus
7	4130 518	2			WASHER, Frt. Carrier Thrust, 2-5/8" I.D., w/4 Tabs I.D.
8	4130 514	1			CARRIER ASSEMBLY, Front Planet Pinion
9	4130 685	1			GEAR, w/Bushing, Sun 38T-28T
10	4130 736	1			SPACER, Sun Gear, 4 Inner Teeth, 2" O.D.
11	4471 566	2			PLATE, Sun Gear Driving Shell, Thrust
12	4531 288	1			SHELL, Sun Gear Driving
13	1942 439	1			RING, Sun Gear Driving Shell, Lock 1-41/64" O.D.
14	4431 438	1			CARRIER ASSEMBLY, Rear Planet Pinion
15	3681 935	2			WASHER, Rr. Carrier Thrust, 2" I.D., w/4 Tabs O.D.
16	3743 184	1			GEAR, Rear Annulus
17	3515 501	1			SUPPORT, Rr. Annulus Gear, 62T-28T, 4" O.D.
18	1942 444	1			SNAP RING, Rr. Annulus Gear, 4-1/16" O.D.
19	6033 480	1			RING, Reverse Drum Retaining
20	4471 564	1			GASKET, O/Drive Cl. Piston Retainer To Case
21	4637 956	1			DRUM, Reverse
22	4431 690	1			CAM, "O" Running Clutch
23	4431 432	1			CLUTCH, w/Rollers and Springs, "O" Running Clutch
24	6033 616	6			SCREW, Cam to Case, 1/4-28 x 7/8"
25	4617 246	1			RETAINER, Piston
26	4505 188	1			PLATE, Intermediate Shaft Thrust, .060" Thk.
27	4617 604	1			SHAFT, w/Plug, Intermediate
28	4617 775	1			PLATE, Front Annulus Gear Support Thrust, 2.168"O.D., 1.515"., .030" Thick

MODEL CODES:

72=2 DR Wagon
74=4 DR Wagon
77=Open Body 93" Whlbase
78=Open Body 103" Whlbase - Export
T=2WD
J,N=4WD
U=4WD (RHD)

BODY STYLES:

YJ=Wrangler (4X4) "S"
Weangler (4X4) SE
Wrangler (4X4) Sahara
Wrangler (4X4) Renegade
XJ=Cherokee SE
Cherokee Sport
Cherokee Country
ZJ=Grand Cherokee SE
Grand Cherokee Laredo
Grand Cherolee Limited
ZG=Grand Cherokee European
Y1=Wrangler
X1=Cherokee
Z1=Grand Cherokee
KDX=Vehicles

AR = Use as Required - = Non Illustrated Part P.A.R. = Paint as Required

« RETURN TO GROUP INDEX

OUTPUT SHAFT AUTOMATIC TRANSMISSION, 4 SPEED, 42RE GRAND CHEROKEE ZJ
Figure 21C-430

21C-430

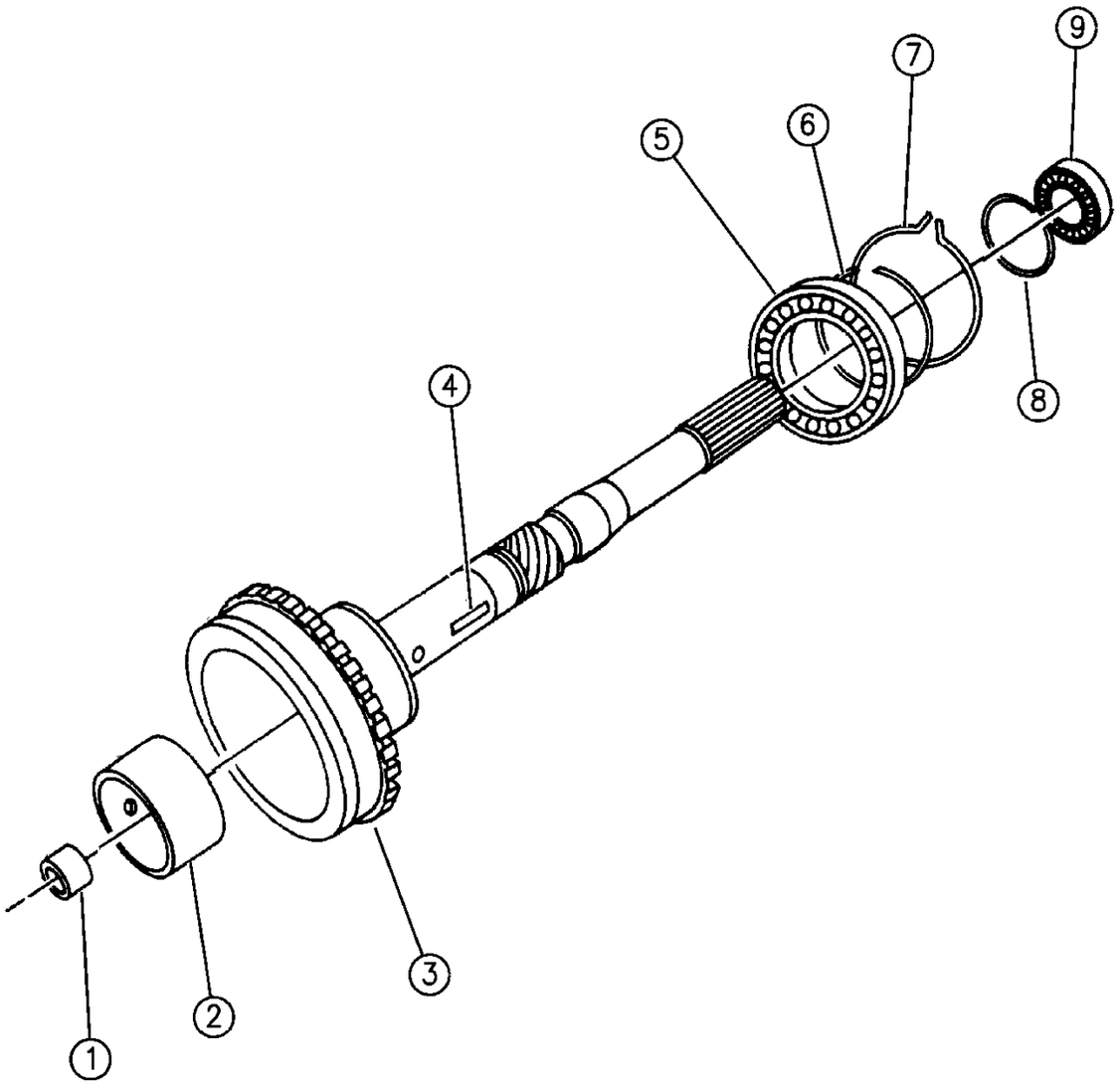

ITEM	PART NUMBER	QTY	BODY	MODEL	DESCRIPTION
1		1			BUSHING, O/P Shaft Pilot, (Serviced in O/P Shaft)
2					BUSHING, Not Serviced
3					SHAFT ASSEMBLY ***
	4461 144	1			w/4617570
	4461 153	1			w/4617860
	4798 536	1			w/52118154
4	4461 058	1			KEY, O/P Shaft Gov. Drive
5	4461 008	1			BEARING, O/P Shaft Front
6	4461 068	1			SNAP RING, O/P Shaft Front Beaaring
7	4461 057	1			SNAP RING, O/P Shaft Brg. to Case
8	4461 069	1			SNAP RING, O/P Shaft Rear Bearing
9	2466 224	1			BEARING, O/P Shaft, Rear, 2.8344 O.D.

MODEL CODES:

72=2 DR Wagon
74=4 DR Wagon
77=Open Body 93" Whlbase
78=Open Body 103" Whlbase - Export
T=2WD
J,N=4WD
U=4WD (RHD)

BODY STYLES:

YJ=Wrangler (4X4) "S"
Weangler (4X4) SE
Wrangler (4X4) Sahara
Wrangler (4X4) Renegade
XJ=Cherokee SE
Cherokee Sport
Cherokee Country
ZJ=Grand Cherokee SE
Grand Cherokee Laredo
Grand Cherolee Limited
ZG=Grand Cherokee European
Y1=Wrangler
X1=Cherokee
Z1=Grand Cherokee
KDX=Vehicles

AR = Use as Required - = Non Illustrated Part P.A.R. = Paint as Required

« RETURN TO GROUP INDEX

BANDS, REVERSE AND KICKDOWN WITH LINKAGE AUTOMATIC TRANSMISSION, 4 SPEED, 42RE GRAND CHEROKEE ZJ
Figure 21C-510

21C-510

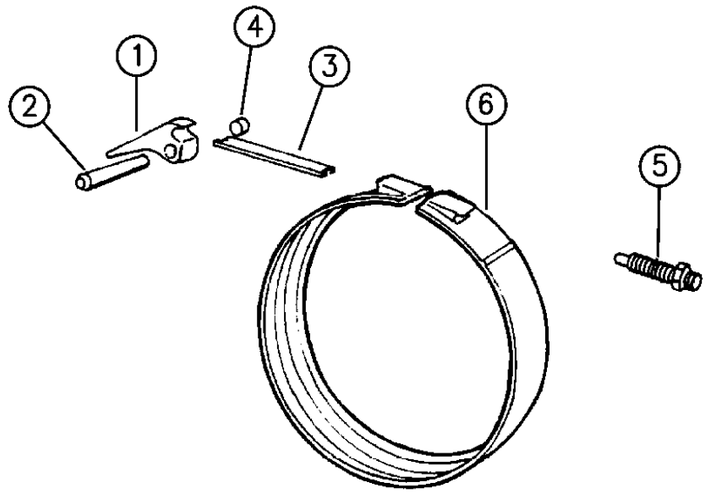

KICKDOWN BAND

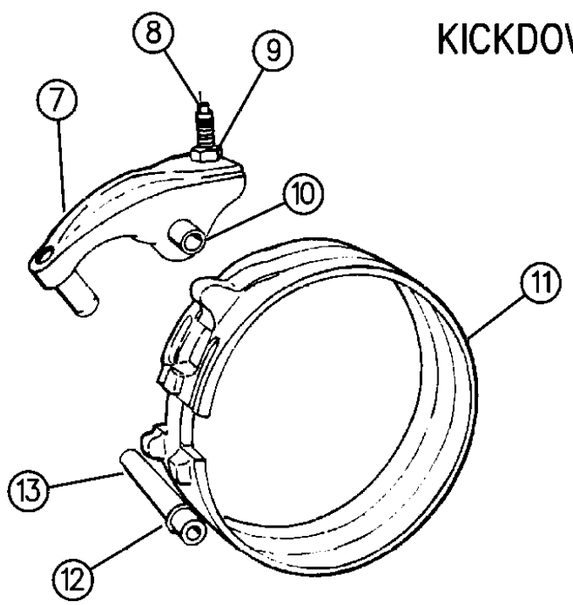

DOUBLE WRAP REVERSE BAND

94J50 510

ITEM	PART NUMBER	QTY	BODY	MODEL	DESCRIPTION
1	3515 116	1			LEVER, Kickdown Band, Use w/52118028,9027 Trans.
	5211 8264	1			w/52118353,8354 Trans.
2	4531 181	1			SHAFT, Kickdown Lever
3	3515 084	1			STRUT, Kickdown Band
4		1			PLUG, Shaft Lever, 1/4"-18 Pipe (Not Serviced)
5	1942 477	1			SCREW, Kickdown Band Adjusting
	0124 934	1			NUT, Kickdown Band Adj. Screw, 1/2-20
6	4617 849	1			BAND, Kickdown
7	4202 764	1			LEVER, w/Stem, Reverse Band
	4202 765	1			LEVER, Reverse Band
8	2538 472	1			SCREW, Reverse Band Adjusting
9	0114 942	1			NUT, Adj. Screw, Lock, 3/8-24
10	3410 102	1			SHAFT, Reverse Band Lever
11	4443 187	1			BAND, Reverse
12	6030 657	2			SEAL, Reverse Band Lever Shaft
13	3410 102	1			SHAFT, Reverse Band Reaction

MODEL CODES:

72=2 DR Wagon
74=4 DR Wagon
77=Open Body 93" Whlbase
78=Open Body 103" Whlbase - Export
T=2WD
J,N=4WD
U=4WD (RHD)

BODY STYLES:

YJ=Wrangler (4X4) "S"
Weangler (4X4) SE
Wrangler (4X4) Sahara
Wrangler (4X4) Renegade
XJ=Cherokee SE
Cherokee Sport
Cherokee Country
ZJ=Grand Cherokee SE
Grand Cherokee Laredo
Grand Cherolee Limited
ZG=Grand Cherokee European
Y1=Wrangler
X1=Cherokee
Z1=Grand Cherokee
KDX=Vehicles

AR = Use as Required - = Non Illustrated Part P.A.R. = Paint as Required

« RETURN TO GROUP INDEX

VALVE BODY AUTOMATIC TRANSMISSION, 4 SPEED, 42RE GRAND CHEROKEE ZJ
Figure 21C-710

21C-710

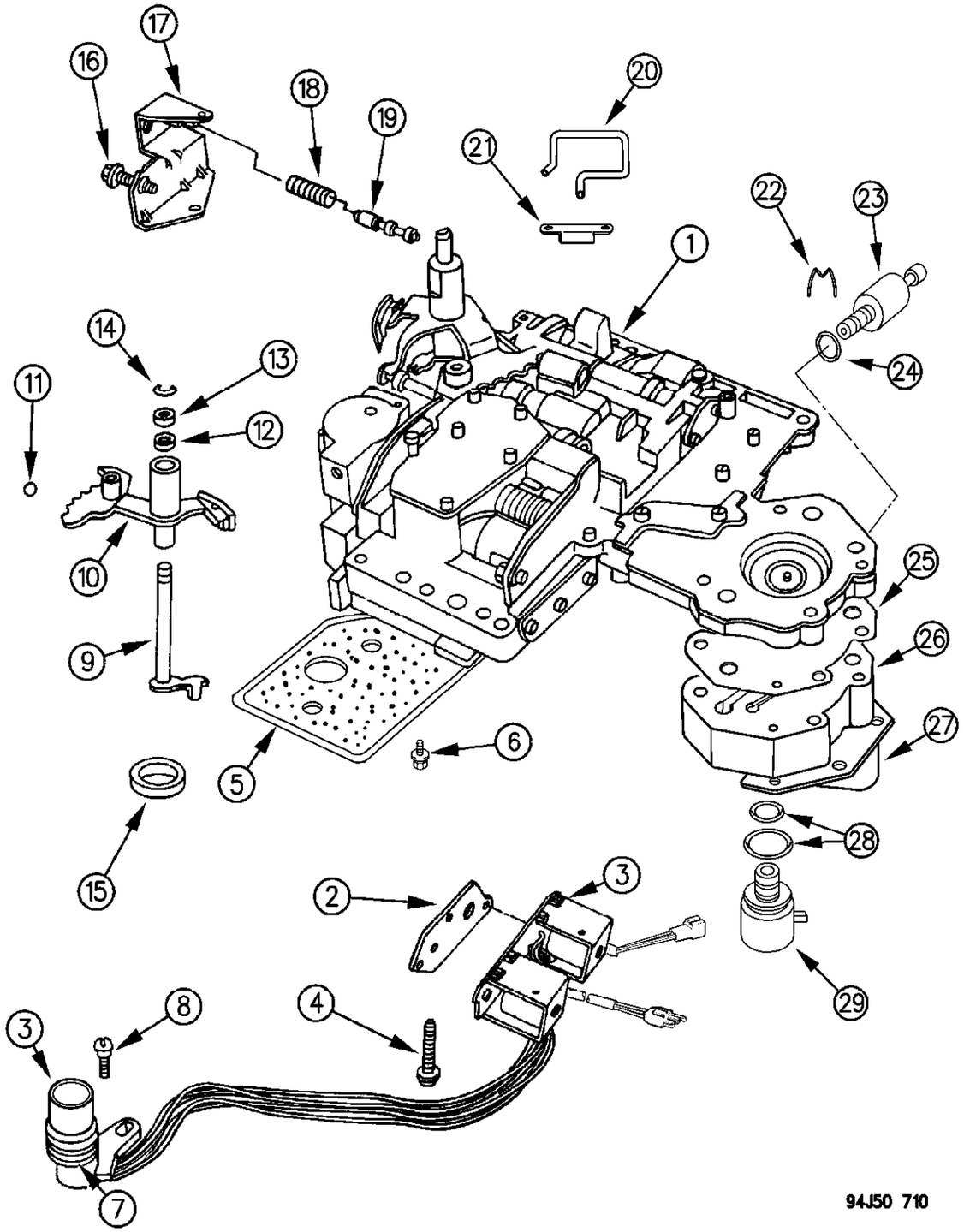

ITEM	PART NUMBER	QTY	BODY	MODEL	DESCRIPTION
					GASKET and SEAL PACKAGE, Valve Body and Servo
					Recondition ***
	4746 122	1			1994-95 ***
	4863 933	1			1996 ***
					Consists Of:
					1 - 3878313 SCREEN, Regulator Valve
					1 - 4505098 SEAL, Manual Valve Shaft
					1 - 6028864 SEAL, K/Down, Inner Piston
					1 - 6030657 SEAL, Rev. Band Lever Shaft
					1 - 4202864 SEAL, Rev. Servo Piston
					1 - 2466548 SEAL, Throttle Lever Shaft
					1 - 4295875 GASKET, Trans. Oil Pan
					1 - 3743033 RING, Seal K/Dn. Servo Piston, Small
					1 - 4295966 RING, Seal K/Dn. Servo Piston, Large
					1 - 4295966 RING, Seal K/Dn. Servo Guide
					1 - 3743010 RING, Seal Accumulator Piston, Small
					1 - 3743013 RING, Seal Accumulator Piston, Large
					1 - 4431958 RING, Seal 3&4 Accum. Piston, Large
					1 - 4431959 RING, Seal 3&4 Accum. Piston, Small
					1 - 3515996 FILTER, Trans. Oil
					1 - 6033448 O-RING, Solenoid Wiring Connection
					1 - 4446194 GASKET, Solenoid Assy. 1994-95
					1 - 6024336 SNAP RING, K/Down Inner Piston 1994-95
					1 - 6028863 SNAP RING, K/Down Servo
					1 - 6027153 RING, Reverse Servo Plug
					1 - 2464464 SNAP RING, Rev. Servo Piston Spring Ret.
					1 - 6025031 SNAP RING, K/Down Servo Inner Piston
					1 - 3743014 SEAL RING, K/Down Servo Inner Piston
					1 - 6031410 O-RING, K/Down Servo Inner Piston
					1- 52118510 GASKET, Solenoid 1996
					1- 4617216 GASKET, Transmission Governer Body 1996
					1- 6031392 SNAP RING, Internal 1996
					1- 1942486 SNAP RING, Transmission Kickdown Servo 1996
1	5211 7911	1			VALVE BODY, and Transfer Plate Assy., w/Lock-Up Valve, Use w/52118028,9027 Trans. ***
	5211 8269	1			w/52118353,8354 Trans.
	5211 8526	1			w/52119163, 52119162 Trans.
	5211 8708	1			w/52118423,52118424
2	4446 194	1			GASKET, Solenoid
3	4617 463	1			SOLENOID, w/Wiring and 8 Prong Connector, w/Overdrive and Lock-Up Valve
4	0181 071	3			SCREW, Valve Body to Case, 1/4-20 x 1-3/4"

MODEL CODES:

72=2 DR Wagon
74=4 DR Wagon
77=Open Body 93" Whlbase
78=Open Body 103" Whlbase - Export
T=2WD
J,N=4WD
U=4WD (RHD)

BODY STYLES:

YJ=Wrangler (4X4) "S"
Weangler (4X4) SE
Wrangler (4X4) Sahara
Wrangler (4X4) Renegade
XJ=Cherokee SE
Cherokee Sport
Cherokee Country
ZJ=Grand Cherokee SE
Grand Cherokee Laredo
Grand Cherolee Limited
ZG=Grand Cherokee European
Y1=Wrangler
X1=Cherokee
Z1=Grand Cherokee
KDX=Vehicles

AR = Use as Required - = Non Illustrated Part P.A.R. = Paint as Required

VALVE BODY AUTOMATIC TRANSMISSION, 4 SPEED, 42RE GRAND CHEROKEE ZJ
Figure 21C-710

21C-710

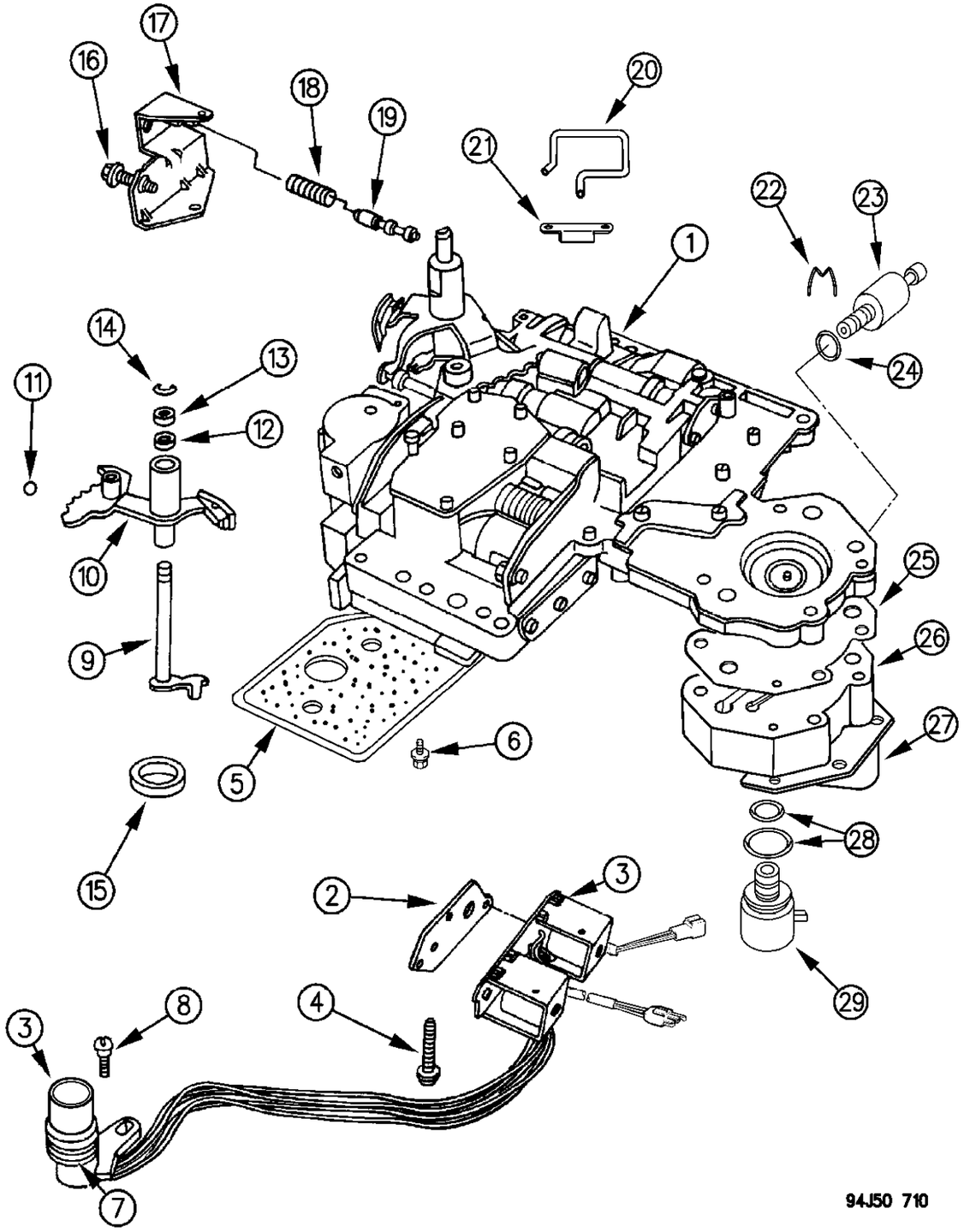

ITEM	PART NUMBER	QTY	BODY	MODEL	DESCRIPTION
5	3515 996	1			FILTER, Trans. Oil
6	6033 826	3			SCREW, Oil Filter
7	6034 748	1			O-RING, Solenoid Wiring Connector ***
8	6033 985	1			SCREW, Solenoid Wiring Conn. Mtg.
9	3681 227	1			LEVER, Throttle Valve
10	4617 439	1			LEVER, w/Insulator, Manual Valve
11	0147 488	1			BALL, Manual Lever Detent, 11/32" Dia.
12	2466 548	1			SEAL, Throttle Lever Shaft, Rubber, 5/8" O.D.
13	2538 062	1			WASHER, Throttle Valve Lever Shaft
14	6025 857	1			E-RING, Throttle Valve Lever Shaft
15	4505 098	1			SEAL, Manual Valve , 1-1/4" O.D.
16	6030 609	1			SCREW, Throttle Pressure Adjusting
17	4617 010	1			BRACKET, Throttle Pressure Adj. Screw
18	4130 492	1			SPRING, Switch Valve
19	4505 036	1			VALVE, Trans. Switch
20	4617 008	1			Tube, Trans. Line Pressure Boost Valve Oil ***
21	4617 574	1			RETAINER, Line Pressure Boost Valve Oil Tube
22	4617 219	1			CLIP, Gov. Pressure Transducer Retaining
23	5602 7562	1			SENSOR, Trans. Pressure, 3 Prong Connector
	5602 7720	1			1996, 4 Prong
24	6034 493	1			O-RING, Pressure Sensor, .369 I.D.
25	4617 216	1			GASKET, Gov. Pressure Solenoid Body
26		1			BODY, Gov. Pressure Solenoid (Serviced in Assy.)
27	4617 211	1			RETAINER, Gov. Pressure Solenoid
28	4723 549	1			O-RING PACKAGE, Solenoid, .494 I.D., .873 I.D. ***
29	4617 210	1			SOLENOID, Trans. Governor Pressure, 2 Prong Connector
	3878 313	1			SCREEN, Regulator Valve (Not Shown)
	4348 907	1			SPRING, Limit Valve (Not Shown)

MODEL CODES:

72=2 DR Wagon
74=4 DR Wagon
77=Open Body 93" Whlbase
78=Open Body 103" Whlbase - Export
T=2WD
J,N=4WD
U=4WD (RHD)

BODY STYLES:

YJ=Wrangler (4X4) "S"
Weangler (4X4) SE
Wrangler (4X4) Sahara
Wrangler (4X4) Renegade
XJ=Cherokee SE
Cherokee Sport
Cherokee Country
ZJ=Grand Cherokee SE
Grand Cherokee Laredo
Grand Cherolee Limited
ZG=Grand Cherokee European
Y1=Wrangler
X1=Cherokee
Z1=Grand Cherokee
KDX=Vehicles

AR = Use as Required - = Non Illustrated Part P.A.R. = Paint as Required

« RETURN TO GROUP INDEX

SERVOS, ACCUMULATOR PISTON AND SPRING AUTOMATIC TRANSMISSION, 4 SPEED, 42RE GRAND CHEROKEE ZJ
Figure 21C-720

21C-720

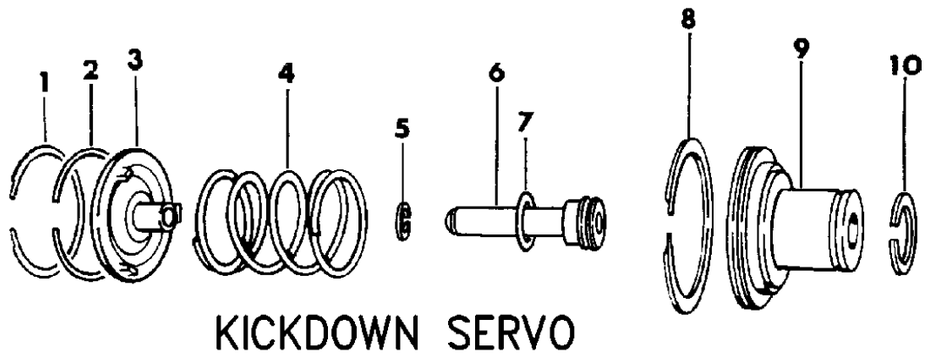

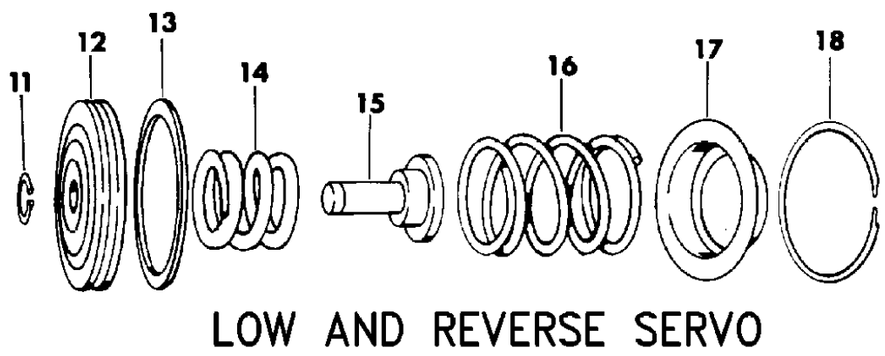

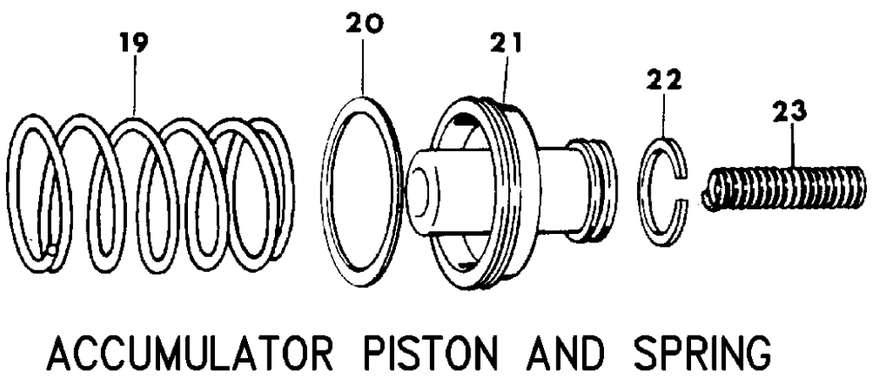

94J50 720

ITEM	PART NUMBER	QTY	BODY	MODEL	DESCRIPTION
1	6028 863	1			SNAP RING, Kickdown Servo Guide, 2-3/8" I.D.
2	4295 966	1			SEAL RING, Kickdown Servo Guide, 2-3/8" I.D.
3	3410 332	1			GUIDE, Kickdown Servo
4	4531 119	1			SPRING, K/Down Servo Piston
5	6024 336	1			SNAP RING, Inner, 1-1/8" I.D.
6	4058 780	1			ROD, Kickdown Servo Piston
7	6028 864	1			SEAL, Kickdown Rod
8	4295 966	1			SEAL RING, Kickdown Servo Piston, Large 2-3/8" O.D.
9	4058 777	1			PISTON, Kickdown Servo
	6031 410	1			O-RING, Kickdown Servo Inner Piston
10	3743 033	1			SEAL RING, Kickdown Servo Piston, Small 1" O.D.
11	6027 153	1			RING, Reverse Servo Piston Plug, 7/16" I.D.
12	2801 271	1			PISTON, Reverse Servo
13	4202 864	1			SEAL, Reverse Servo Piston
14	4130 824	1			SPRING, Reverse Servo Cushion
15	3743 353	1			PLUG, Reverse Servo Piston
16	2801 274	1			SPRING, Reverse Servo Piston
17	2464 463	1			RETAINER, Reverse Servo Piston Spring
18	2464 464	1			SNAP RING, Reverse Servo Piston Spring Retainer
19	4531 259	1			SPRING, Accumulator, Lower
20	3743 013	1			SEAL RING, Accumulator Piston, Large
21	3743 650	1			PISTON, Accumulator
22	3743 010	1			SEAL RING, Accumulator Piston, Small
23	3515 114	1			SPRING, Upper

MODEL CODES:

72=2 DR Wagon
74=4 DR Wagon
77=Open Body 93" Whlbase
78=Open Body 103" Whlbase - Export
T=2WD
J,N=4WD
U=4WD (RHD)

BODY STYLES:

YJ=Wrangler (4X4) "S"
Weangler (4X4) SE
Wrangler (4X4) Sahara
Wrangler (4X4) Renegade
XJ=Cherokee SE
Cherokee Sport
Cherokee Country
ZJ=Grand Cherokee SE
Grand Cherokee Laredo
Grand Cherolee Limited
ZG=Grand Cherokee European
Y1=Wrangler
X1=Cherokee
Z1=Grand Cherokee
KDX=Vehicles

AR = Use as Required - = Non Illustrated Part P.A.R. = Paint as Required

« RETURN TO GROUP INDEX

PARKING SPRAG AUTOMATIC TRANSMISSION, 4 SPEED, 42RE GRAND CHEROKEE ZJ
Figure 21C-730

21C-730

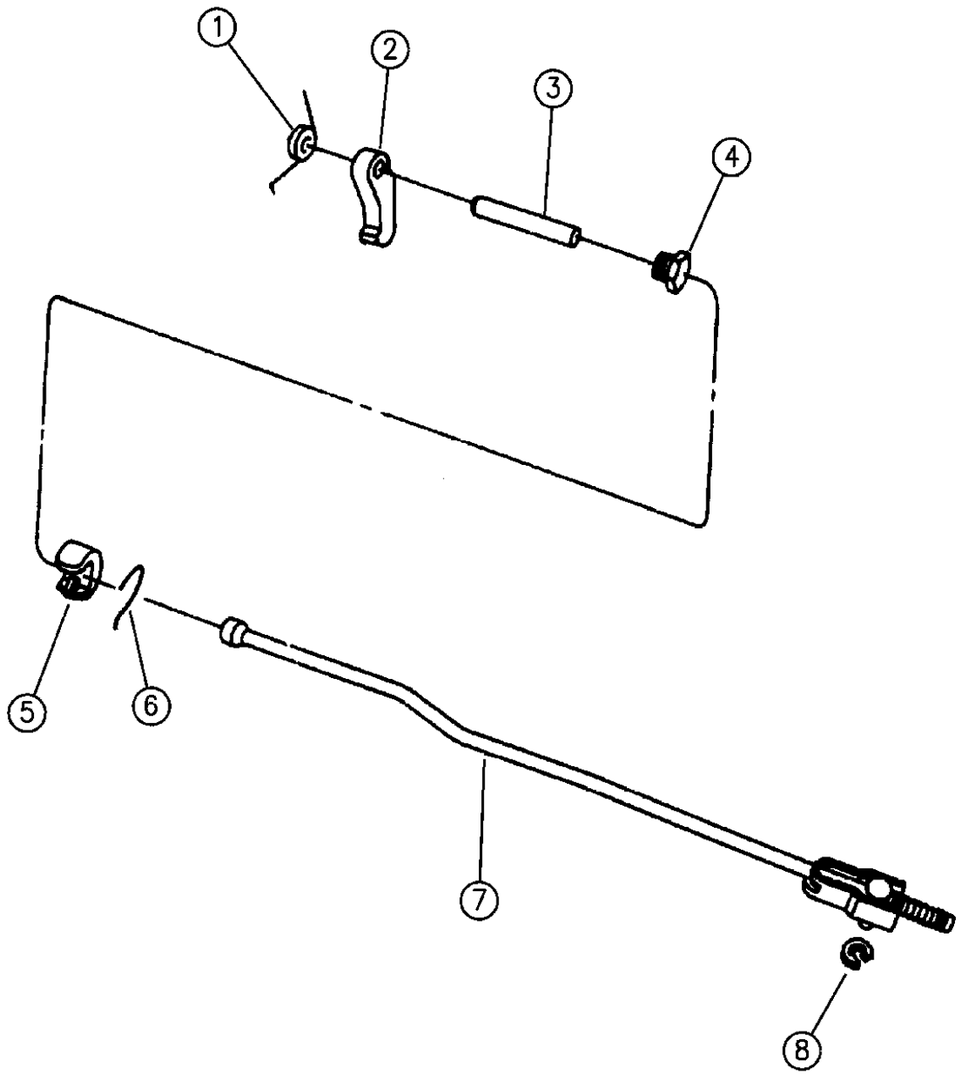

94J50 730

ITEM	PART NUMBER	QTY	BODY	MODEL	DESCRIPTION
1	2466 909	1			SPRING, Parking Sprag
2	4471 415	1			SPRAG, Parking (5/8" Thick) ***
3	2466 892	1			SHAFT, Parking Sprag
4	1798 191	1			PLUG, Shaft Retaining
5	2538 042	1			PLUG, Parking Sprag Reaction
6	2538 034	1			SNAP RING, Reaction Plug
7	4431 748	1			ROD ASSEMBLY, Parking Sprag ***
8	1626 749	1			E-CLIP, Rod ***

MODEL CODES:

72=2 DR Wagon
74=4 DR Wagon
77=Open Body 93" Whlbase
78=Open Body 103" Whlbase - Export
T=2WD
J,N=4WD
U=4WD (RHD)

BODY STYLES:

YJ=Wrangler (4X4) "S"
Weangler (4X4) SE
Wrangler (4X4) Sahara
Wrangler (4X4) Renegade
XJ=Cherokee SE
Cherokee Sport
Cherokee Country
ZJ=Grand Cherokee SE
Grand Cherokee Laredo
Grand Cherolee Limited
ZG=Grand Cherokee European
Y1=Wrangler
X1=Cherokee
Z1=Grand Cherokee
KDX=Vehicles

AR = Use as Required - = Non Illustrated Part P.A.R. = Paint as Required

« RETURN TO GROUP INDEX

CLUTCH, OVERDRIVE WITH GEAR TRAIN AUTOMATIC TRANSMISSION, 4 SPEED, 42RE GRAND CHEROKEE ZJ
Figure 21C-1010

21C-1010

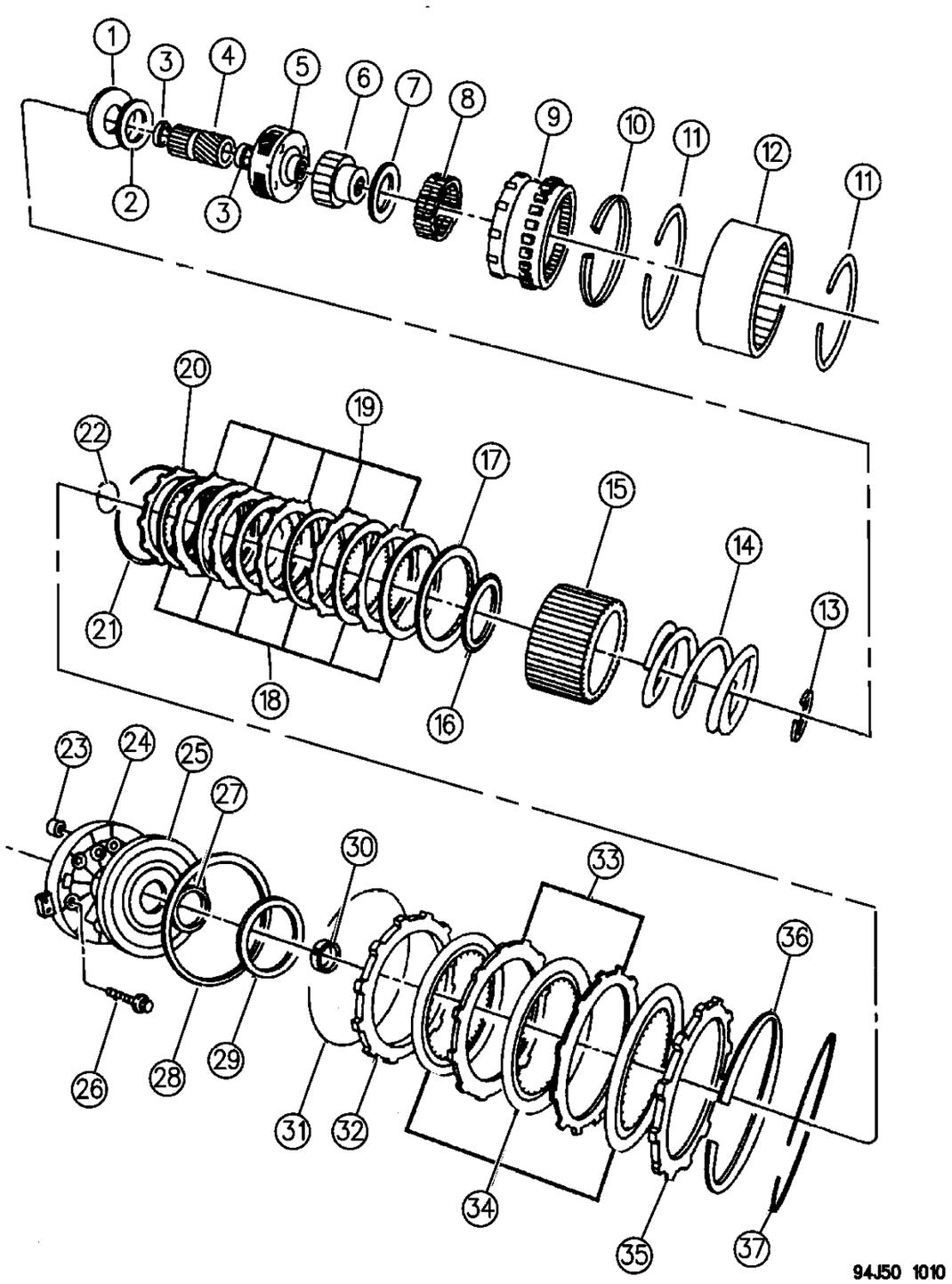

ITEM	PART NUMBER	QTY	BODY	MODEL	DESCRIPTION
1	4740 774	1			PLATE PACKAGE, w/Bearing, Direct Clutch Spring, Thrust ***
2		1			BEARING, O/Drive, Thrust (Serviced in 4740774 Plate Pkg.)
3		2			BUSHING, O/Drive Sun Gear (Serv. in Sun Gear)
4	4773 810	1			GEAR, O/Drive Sun ***
	4874 392	1			w/4Pinion 15 degree
5	4461 118	1			CARRIER ASSEMBLY, O/Drive Planet Pinion (4 Pinion)
6	4461 124	1			RACE, O/Drive "O" Running Clutch
7	4461 014	1			BEARING, O/Drive Race, Thrust
8	4461 015	1			CLUTCH ASSEMBLY, w/Rollers and Springs, O/Drive "O"
					Running
9	4746 349	1			GEAR, O/Drive Annulus ***
	4761 010	1			w/52118154
10	4461 059	1			SNAP RING, O/Drive Annulus Gear, 5-1/4" O.D.
11	4461 060	2			SNAP RING, Direct Clutch Drum to Annulus, 6" O.D.
12	4461 040	1			DRUM, Direct Clutch
13	4461 063	1			SNAP RING, Direct Clutch Spring Plate, 2-3/16" O.D.
14	4461 027	1			SPRING, Direct Clutch Coil
15	4461 072	1			HUB, Direct Clutch Spring Sliding
16	4446 724	1			BEARING, O/Drive Clutch Piston, Thrust
17	4461 030	1			PLATE, Direct Clutch Pressure
18	4461 042	8			DISC, Direct Clutch
19	4461 054	7			PLATE, Direct Clutch
20	4461 031	1			PLATE, Direct Clutch Reaction
21	4461 032	1			SPRING, Direct Clutch Wave
22	4461 064	1			SNAP RING, Direct Clutch Spring Sliding Hub, Round 1-7/8" O.D.
23	4412 583	1			FILTER, Piston Retainer
24	4617 246	1			RETAINER, O/Drive Clutch Piston
25	4431 695	1			PISTON, O/Drive Clutch
26	6033 479	6			SCREW, Retainer to Case, 1/4-28 x 1-5/8"
27	4431 697	1			SEAL, O/Drive Clutch Piston, Inner
28	4431 696	1			SEAL, O/Drive Clutch Piston, Outer
29					PLATE, O/Drive Clutch Piston, Selective Thrust
	4431 730	AR			.108 - .110" Thk.
	4431 585	AR			.123 - .125" Thk.
	4431 731	AR			.138 - .140" Thk.
	4431 586	AR			.153 - .155" Thk.
	4431 732	AR			.168 - .170" Thk.
	4431 587	AR			.183 - .185" Thk.
	4431 733	AR			.198 - .200" Thk.
	4431 588	AR			.213 - .215" Thk.
	4431 734	AR			.228 - .230" Thk.
	4431 590	AR			.243 - .245" Thk.

MODEL CODES:

72=2 DR Wagon
74=4 DR Wagon
77=Open Body 93" Whlbase
78=Open Body 103" Whlbase - Export
T=2WD
J,N=4WD
U=4WD (RHD)

BODY STYLES:

YJ=Wrangler (4X4) "S"
Weangler (4X4) SE
Wrangler (4X4) Sahara
Wrangler (4X4) Renegade
XJ=Cherokee SE
Cherokee Sport
Cherokee Country
ZJ=Grand Cherokee SE
Grand Cherokee Laredo
Grand Cherolee Limited
ZG=Grand Cherokee European
Y1=Wrangler
X1=Cherokee
Z1=Grand Cherokee
KDX=Vehicles

AR = Use as Required - = Non Illustrated Part P.A.R. = Paint as Required

CLUTCH, OVERDRIVE WITH GEAR TRAIN AUTOMATIC TRANSMISSION, 4 SPEED, 42RE GRAND CHEROKEE ZJ
Figure 21C-1010

21C-1010

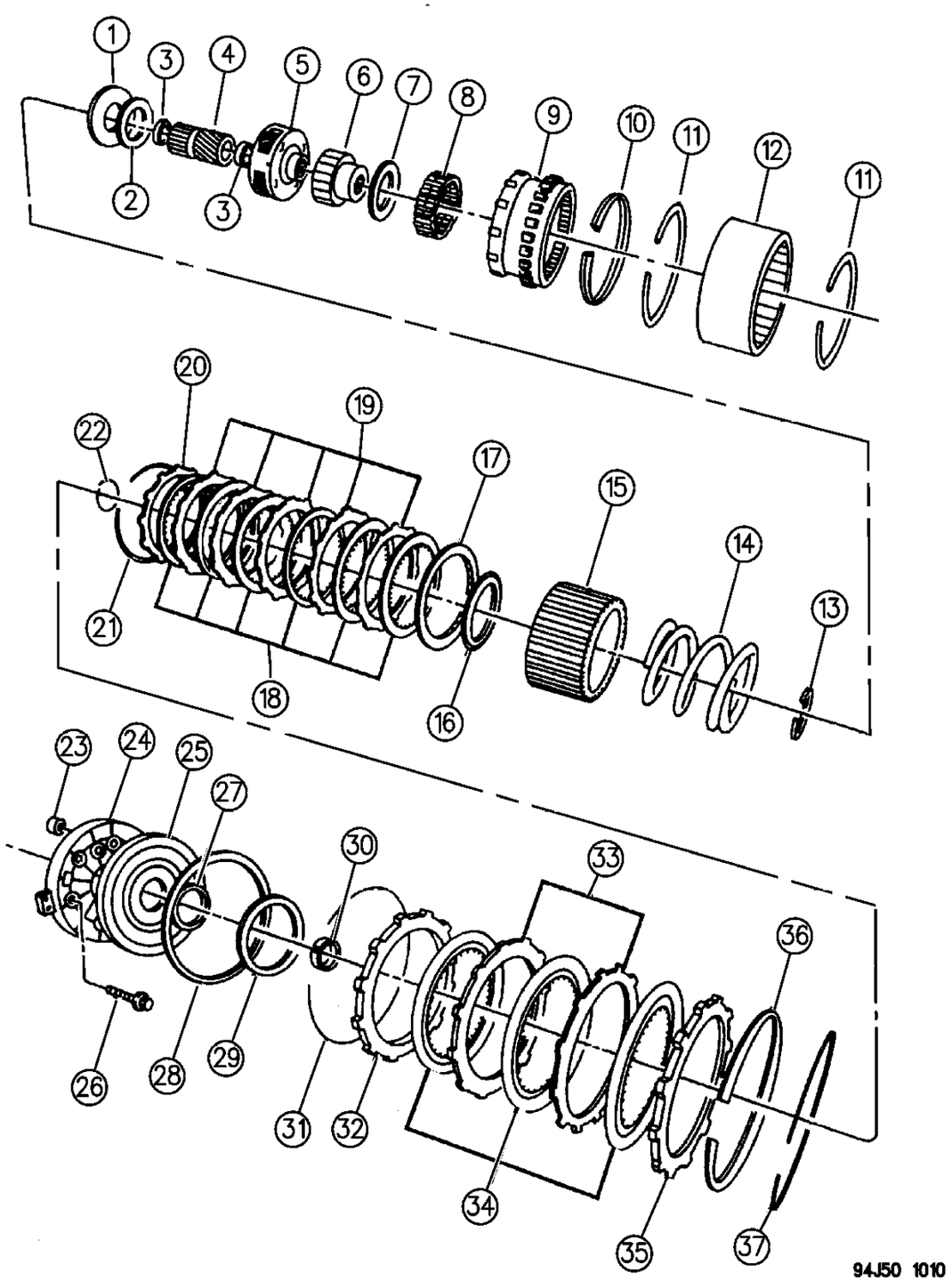

ITEM	PART NUMBER	QTY	BODY	MODEL	DESCRIPTION
30					SPACER, Intermediate Shaft, Selective
	4431 916	AR			.158" Thk.
	4431 917	AR			.175" Thk.
	4431 918	AR			.193" Thk.
	4431 919	AR			.211" Thk.
31	4461 082	1			SNAP RING, O/Drive Clutch Pressure Plate, Round 7" O.D.
32	4461 048	1			PLATE, O/Drive Clutch Pressure
33	4461 047	2		2WD	PLATE, O/Drive Clutch Separator
	4461 047	3		4WD	
34	4461 181	3		2WD	DISC, O/Drive Clutch ***
	4461 181	4		4WD	
35	4461 033	1			PLATE, O/Drive Clutch Reaction
36	4461 066	1			SPRING, O/Drive Clutch Wave
37	4461 065	1			SNAP RING, O/Drive Clutch Reaction Plate, 6-1/2" O.D.

MODEL CODES:

72=2 DR Wagon
74=4 DR Wagon
77=Open Body 93" Whlbase
78=Open Body 103" Whlbase - Export
T=2WD
J,N=4WD
U=4WD (RHD)

BODY STYLES:

YJ=Wrangler (4X4) "S"
Weangler (4X4) SE
Wrangler (4X4) Sahara
Wrangler (4X4) Renegade
XJ=Cherokee SE
Cherokee Sport
Cherokee Country
ZJ=Grand Cherokee SE
Grand Cherokee Laredo
Grand Cherolee Limited
ZG=Grand Cherokee European
Y1=Wrangler
X1=Cherokee
Z1=Grand Cherokee
KDX=Vehicles

AR = Use as Required - = Non Illustrated Part P.A.R. = Paint as Required

CONTROLS, GEARSHIFT, FLOOR MOUNTED AUTOMATIC TRANSMISSION, 4 SPEED, 42RE GRAND CHEROKEE, ZJ
Figure 21C-1210

21C-1210

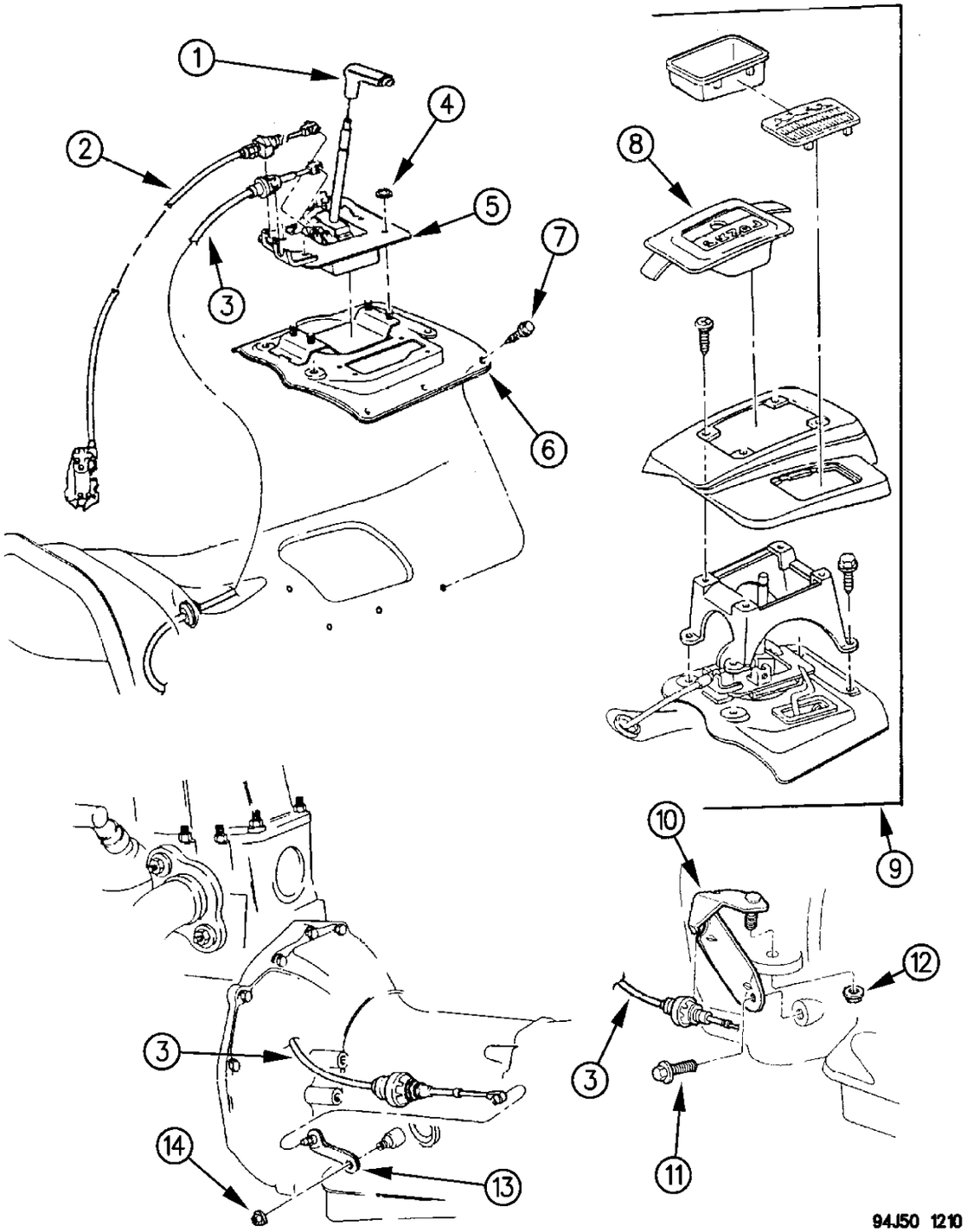

ITEM	PART NUMBER	QTY	BODY	MODEL	DESCRIPTION
1	5300 7750	1			HANDLE, Trans. Gearshift
2	5207 7992	1			CABLE ASSEMBLY, Park Interlock
	5207 8961	1	ZJ		1996
	5207 8959	1	ZG		1996
3	5207 9230	1			CABLE ASSEMBLY, Trans. Gearshift ***
	5300 8656	1			GROMMET, Gearshift Cable
4	6101 695	4			NUT, Shifter Hsg. Mounting
5	5207 8384	1			HOUSING and LEVER, Assy., Gearshift ***
	5300 3350	1			SPRING, Pawl Return (Not Shown)
6					COVER, Floor Shift Mtg.
	5300 7541	1			4x4
	5300 7349	1			4x2
7		10			SCREW, w/Washer (Not Serviced)
8	5511 5065	1			BEZEL, Floor Console
9					CONSOLE, Mini (Reference See Group 23A)
10	5207 8255	1			BRACKET, Shift Cable Mounting
11		1			SCREW, Shift Cable Mtg. Brkt., 5/16-18 x 3/4" (Not Serviced)
12	0152 476	1			NUT, Cable Brkt. Mtg., 7/16-14
13	5207 8251	1			LEVER, Manual Valve Shaft Shift
14	J420 0046	1			NUT, Lever M8x1.25

MODEL CODES:

72=2 DR Wagon
74=4 DR Wagon
77=Open Body 93" Whlbase
78=Open Body 103" Whlbase - Export
T=2WD
J,N=4WD
U=4WD (RHD)

BODY STYLES:

YJ=Wrangler (4X4) "S"
Weangler (4X4) SE
Wrangler (4X4) Sahara
Wrangler (4X4) Renegade
XJ=Cherokee SE
Cherokee Sport
Cherokee Country
ZJ=Grand Cherokee SE
Grand Cherokee Laredo
Grand Cherolee Limited
ZG=Grand Cherokee European
Y1=Wrangler
X1=Cherokee
Z1=Grand Cherokee
KDX=Vehicles

AR = Use as Required - = Non Illustrated Part P.A.R. = Paint as Required

« RETURN TO GROUP INDEX

SAGIPARTS

GROUP-21F
AUTOMATIC TRANSMISSION (44RE)

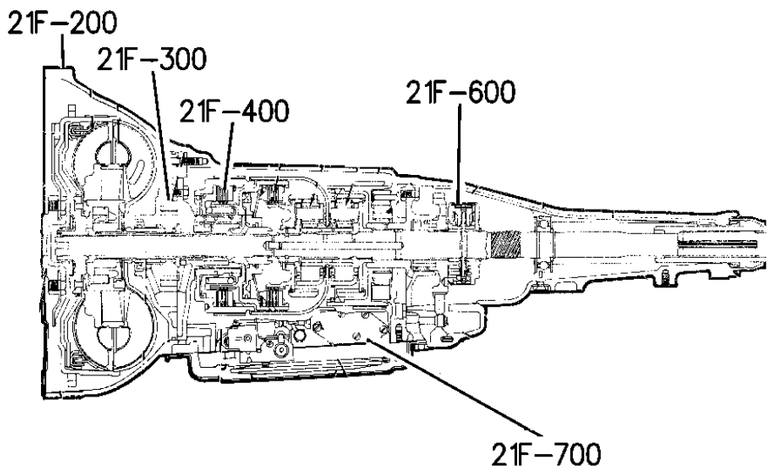

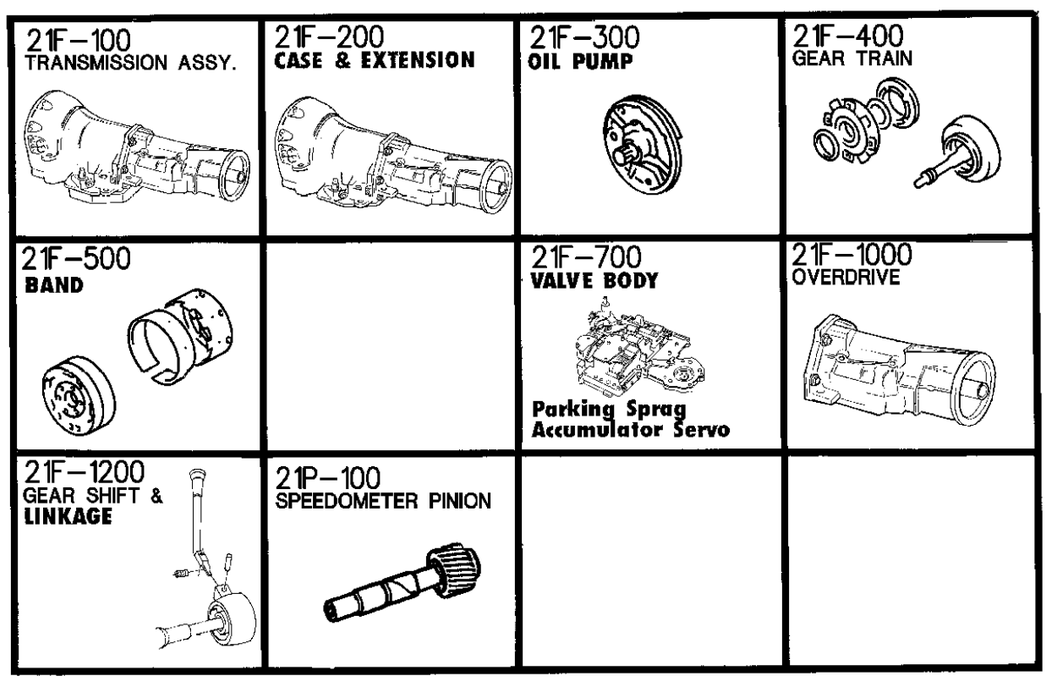

GROUP 21F - TRANS. AUTO 44RE 4 SPEED

ILLUSTRATION TITLE — **GROUP-FIG. NO.**

TRANSMISSION ASSEMBLY
TRANSMISSION ASSEMBLY AUTOMATIC TRANSMISSION, 4 SPEED, 44RE GRAND CHEROKEE ZJ .... Fig. 21F-110

CASE AND EXTENSION
CASE, AND RELATED PARTS AUTOMATIC TRANSMISSION, 4 SPEED, 44RE GRAND CHEROKEE ZJ ... Fig. 21F-210
EXTENSION AUTOMATIC TRANSMISSION, 4 SPEED, 44RE GRAND CHEROKEE ZJ ..... Fig. 21F-220

OIL PUMP
PUMP, OIL WITH REACTION SHAFT AUTOMATIC TRANSMISSION, 4 SPEED, 44RE GRAND CHEROKEE ZJ ..... Fig. 21F-310

GEAR TRAIN
CLUTCH, FRONT AND REAR WITH GEAR TRAIN AUTOMATIC TRANSMISSION, 4 SPEED, 44RE GRAND CHEROKEE ZJ ..... Fig. 21F-410
GEAR TRAIN AND INTERMEDIATE SHAFT AUTOMATIC TRANSMISSION, 4 SPEED, 44RE GRAND CHEROKEE ZJ ..... Fig. 21F-420
OUTPUT SHAFT AUTOMATIC TRANSMISSION, 4 SPEED, 44RE GRAND CHEROKEE ZJ ..... Fig. 21F-430

BAND, REVERSE AND KICKDOWN
BANDS, REVERSE AND KICKDOWN WITH LINKAGE AUTOMATIC TRANSMISSION, 4 SPEED, 44RE GRAND CHEROKEE ZJ ..... Fig. 21F-510

VALVE BODY
VALVE BODY AUTOMATIC TRANSMISSION, 4 SPEED, 44RE GRAND CHEROKEE ZJ ..... Fig. 21F-710
SERVOS, ACCUMULATOR PISTON AND SPRING AUTOMATIC TRANSMISSION, 4 SPEED, 44RE GRAND CHEROKEE ZJ ..... Fig. 21F-720
PARKING SPRAG AUTOMATIC TRANSMISSION, 4 SPEED, 44RE GRAND CHEROKEE ZJ ..... Fig. 21F-730

OVERDRIVE, GEAR TRAIN
CLUTCH, OVERDRIVE WITH GEAR TRAIN AUTOMATIC TRANSMISSION, 4 SPEED, 44RE GRAND CHEROKEE ZJ ..... Fig. 21F-1010

GEARSHIFT CONTROLS
CONTROLS, GEARSHIFT, FLOOR MOUNTED AUTOMATIC TRANSMISSION, 4 SPEED, 44RE GRAND CHEROKEE ..... Fig. 21F-1210

TRANSMISSION ASSEMBLY AUTOMATIC TRANSMISSION, 4 SPEED, 44RE GRAND CHEROKEE ZJ
Figure 21F-110

21F-110

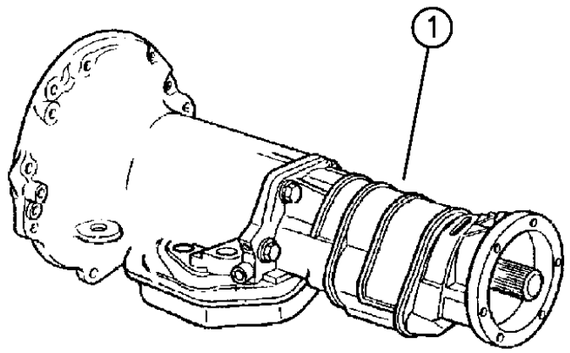

ITEM	PART NUMBER	QTY	BODY	MODEL	DESCRIPTION
1					TRANSMISSION ASSEMBLY, Complete w/Overdrive Assy., 4 Speed Auto., Electric Shift, 44RE ***
					5.2L Engine
	5211 9108	1		4WD	
					OVERDRIVE ASSEMBLY ***
	5211 8155	1			

MODEL CODES:

72=2 DR Wagon
74=4 DR Wagon
77=Open Body 93" Whlbase
78=Open Body 103" Whlbase - Export
T=2WD
J,N=4WD
U=4WD (RHD)

BODY STYLES:

YJ=Wrangler (4X4) "S"
Weangler (4X4) SE
Wrangler (4X4) Sahara
Wrangler (4X4) Renegade
XJ=Cherokee SE
Cherokee Sport
Cherokee Country
ZJ=Grand Cherokee SE
Grand Cherokee Laredo
Grand Cherolee Limited
ZG=Grand Cherokee European
Y1=Wrangler
X1=Cherokee
Z1=Grand Cherokee
KDX=Vehicles

AR = Use as Required - = Non Illustrated Part P.A.R. = Paint as Required

« RETURN TO GROUP INDEX

CASE, AND RELATED PARTS AUTOMATIC TRANSMISSION, 4 SPEED, 44RE GRAND CHEROKEE ZJ
Figure 21F-210

21F-210

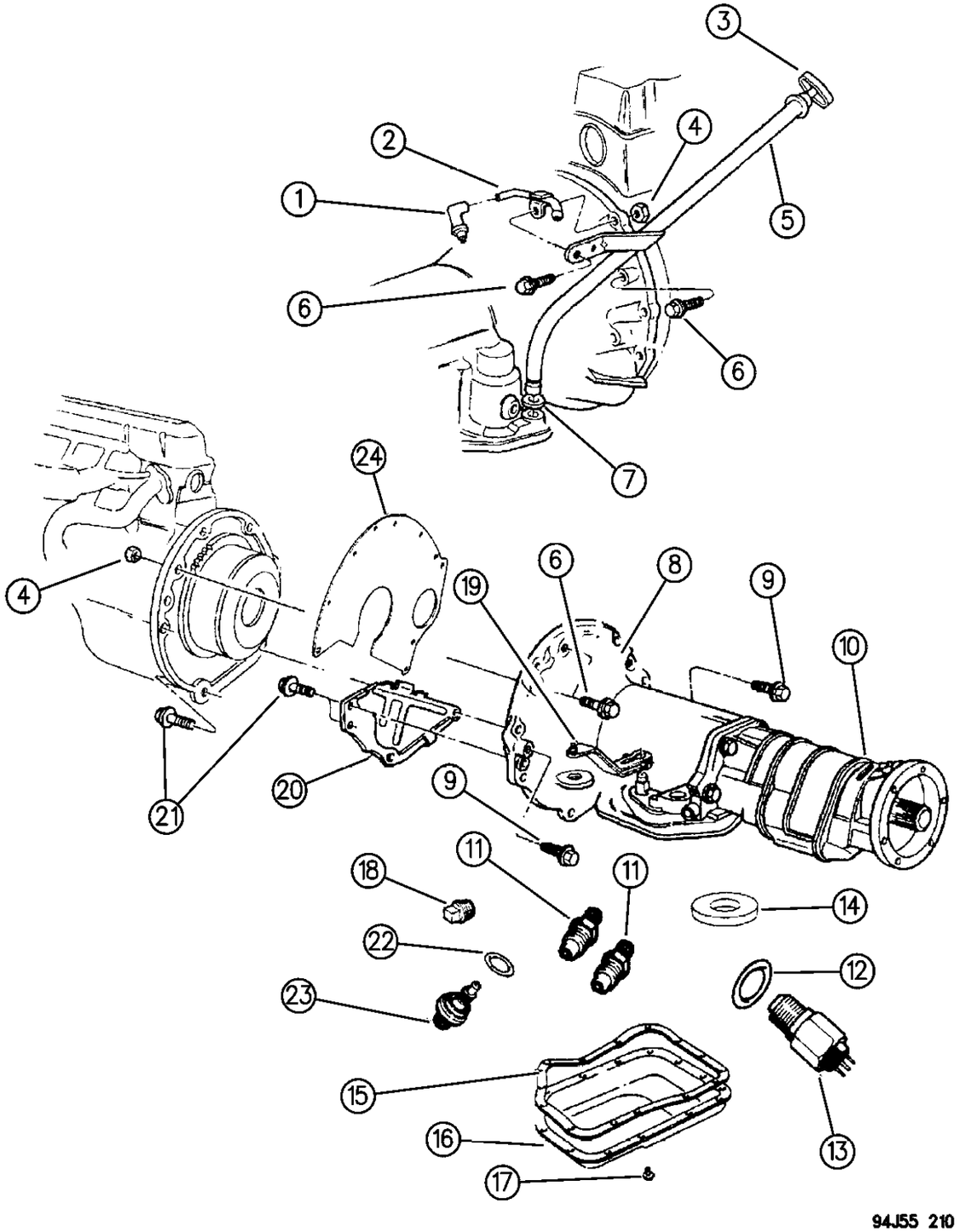

ITEM	PART NUMBER	QTY	BODY	MODEL	DESCRIPTION
					GASKET and SEAL PACKAGE, 44RE, Major Repair ***
	4863 907	1			1996 ***
					Consists Of:
					1 - 4713108 GASKET & SEAL PKG., Front Pump
					1 - 4746122 GASKET & SEAL PKG., Valve Body & Servo
					1994-95
					1- 4863933 GASKET & SEAL PACKAGE. Valve Body & Servo
					1996
					1 - 5252926 GASKET & SEAL PKG., Frt. & Rr. Clutch
					1 - 4713938 GASKET & SEAL PKG., Governor & Ext. 1994-95
	4713 938	1			GASKET and SEAL PACKAGE, Overdrive Assembly, 42RE
					Consists Of:
					1 - 2801398 GASKET, O/P Shaft Brg. Cover
					1 - 3743519 FILTER, Gov., Oil
					1 - 4269956 SEAL, Trans. Adapter
					3 - 4461143 SEAL RINGS, Gov. Drive
					1 - 4531192 GASKET, O/Drive Assy. to Case
					1 - 4531216 SEAL, Extension Oil
1	5209 7701	1			HOSE, And Filter Assy.
2		1			TUBE, w/Clip Transfer Case Vent (Not Serviced)
3	5211 7710	1			INDICATOR, Trans. Oil Level
4	J021 9422	2			NUT, 3/8-16
5	5211 8474	1			TUBE, Trans. Oil Filler
	5211 8626	1			1996
6	J400 1885	4			SCREW, Case Mounting, 3/8-16 x 2-1/8"
7	6030 608	1			SEAL, Oil Filler Tube
	5211 8629	1			W/52118626
8					CASE, Transmission ***
	5211 8482	1			w/52119108
9	J400 4370	2			SCREW, Case Mtg., 7/16-14 x 2-3/4"
10		1			EXTENSION, or Adapter Trans. Case (Refer to Illus.220)
11	4617 517	2			CONNECTOR, Trans. Oil Cooler Quick Disconnect, 1/4-18 Pipe Thread (For 3/8 Tubing)
12	2408 143	1			WASHER, B/U Light Switch
13	3747 361	1			SWITCH, w/Washer, Neutral Starter and B/U Light, w/3 Prongs
14	3681 601	1			MAGNET, Case Chip Collector
15	4295 875	1			GASKET, Oil Pan
16	4617 220	1			PAN, Trans. Oil
17	4723 548	14			SCREW, w/Washer Oil Pan
18	6028 095	AR			PLUG, Pressure Check, 1/8-27 Pipe
19	5207 9168	1			LEVER, Manual Control
20	5211 7556	1			COVER, Case Dust Shield, Lower

MODEL CODES:

72=2 DR Wagon
74=4 DR Wagon
77=Open Body 93" Whlbase
78=Open Body 103" Whlbase - Export
T=2WD
J,N=4WD
U=4WD (RHD)

BODY STYLES:

YJ=Wrangler (4X4) "S"
Weangler (4X4) SE
Wrangler (4X4) Sahara
Wrangler (4X4) Renegade
XJ=Cherokee SE
Cherokee Sport
Cherokee Country
ZJ=Grand Cherokee SE
Grand Cherokee Laredo
Grand Cherolee Limited
ZG=Grand Cherokee European
Y1=Wrangler
X1=Cherokee
Z1=Grand Cherokee
KDX=Vehicles

AR = Use as Required - = Non Illustrated Part P.A.R. = Paint as Required

CASE, AND RELATED PARTS AUTOMATIC TRANSMISSION, 4 SPEED, 44RE GRAND CHEROKEE ZJ
Figure 21F-210

21F-210

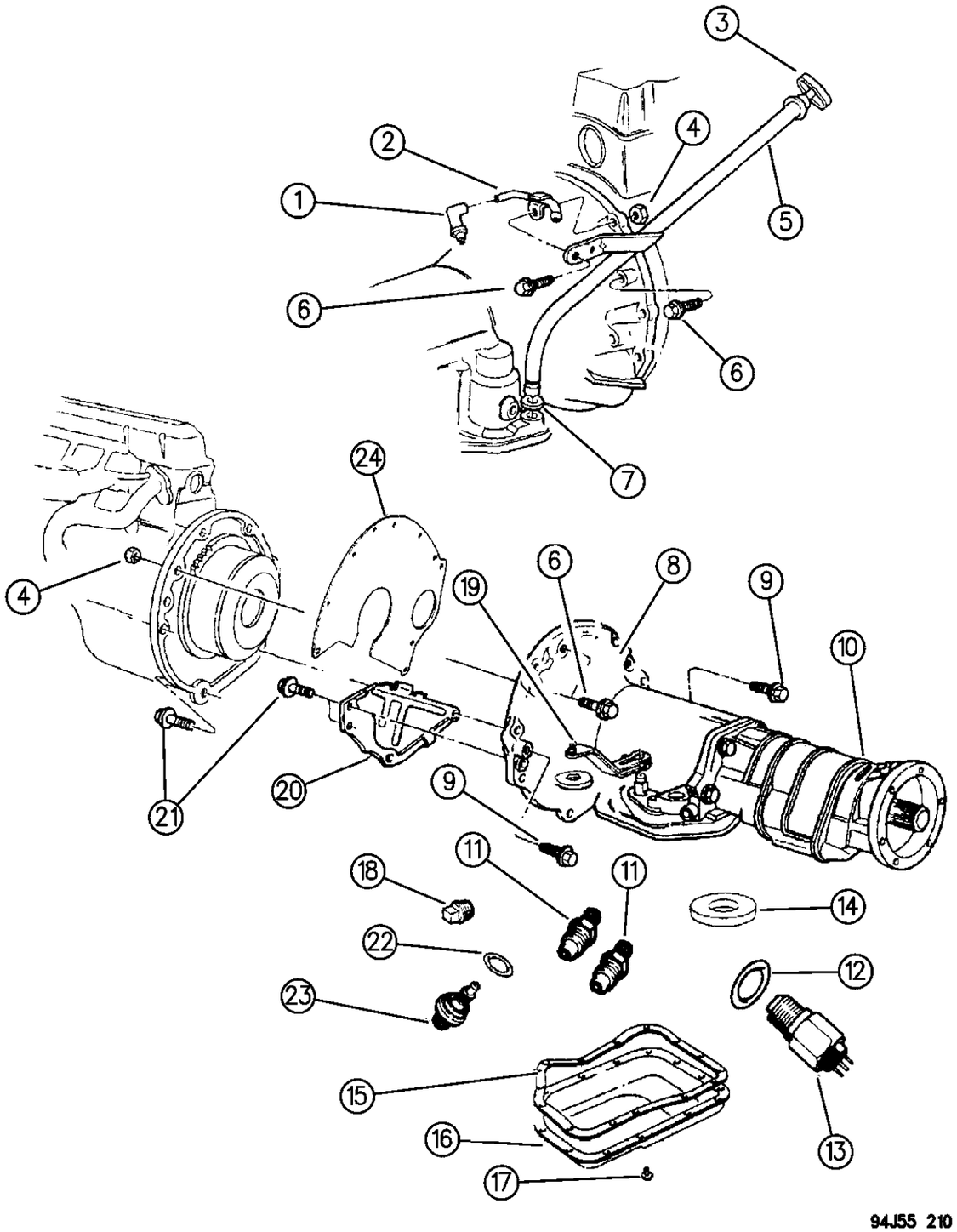

ITEM	PART NUMBER	QTY	BODY	MODEL	DESCRIPTION
21	J400 0987	3			SCREW, w/Washer, Case Cover, 5/16-18 x 5/8"
22	6501 701	1			O-RING, Speed Sensor (24mm) ***
23	4412 879	1			SENSOR, Output Speed (24mm)
24	J323 7847	1			SPACER, Trans. to Eng. Block, Upper

MODEL CODES:

72=2 DR Wagon
74=4 DR Wagon
77=Open Body 93" Whlbase
78=Open Body 103" Whlbase - Export
T=2WD
J,N=4WD
U=4WD (RHD)

BODY STYLES:

YJ=Wrangler (4X4) "S"
Weangler (4X4) SE
Wrangler (4X4) Sahara
Wrangler (4X4) Renegade
XJ=Cherokee SE
Cherokee Sport
Cherokee Country
ZJ=Grand Cherokee SE
Grand Cherokee Laredo
Grand Cherolee Limited
ZG=Grand Cherokee European
Y1=Wrangler
X1=Cherokee
Z1=Grand Cherokee
KDX=Vehicles

AR = Use as Required - = Non Illustrated Part P.A.R. = Paint as Required

EXTENSION AUTOMATIC TRANSMISSION, 4 SPEED, 44RE GRAND CHEROKEE ZJ
Figure 21F-220

21F-220

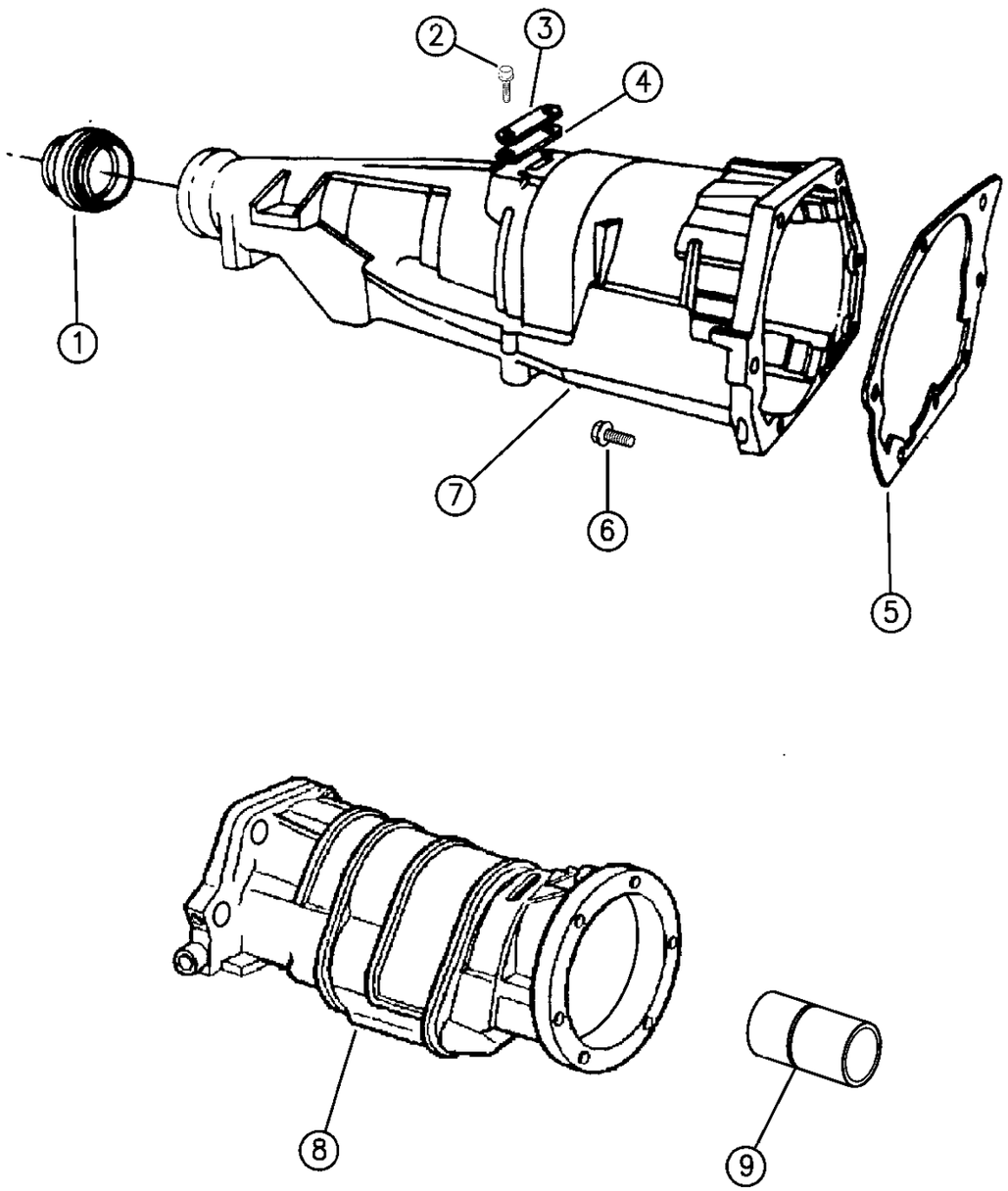

94J55 220

ITEM	PART NUMBER	QTY	BODY	MODEL	DESCRIPTION
1	4531 216	1		2WD	OIL SEAL, Extension Yoke ***
2		2			SCREW, Cover, 1/4-20 x 5/8" (Not Serviced)
3	2466 957	1			COVER, Ext. Bearing
4	2801 398	1			GASKET, Cover
5	4471 564	1			GASKET, Extension or Adapter
6	6033 745	6			SCREW, Ext. to Case, 3/8-16 x 1-1/2"
	6034 224	1			3/8-16 x 2-1/4"
7	4461 184	1		2WD	EXTENSION, w/Bushing, Case
8	4461 135	1		4WD	ADAPTER, Case
9	5210 7563	1		2WD	OIL SEAL, Trans. Extension ***
	4269 956	1		4WD	Adapter, 2.56'O.D.

MODEL CODES:

72=2 DR Wagon
74=4 DR Wagon
77=Open Body 93" Whlbase
78=Open Body 103" Whlbase - Export
T=2WD
J,N=4WD
U=4WD (RHD)

BODY STYLES:

YJ=Wrangler (4X4) "S"
Weangler (4X4) SE
Wrangler (4X4) Sahara
Wrangler (4X4) Renegade
XJ=Cherokee SE
Cherokee Sport
Cherokee Country
ZJ=Grand Cherokee SE
Grand Cherokee Laredo
Grand Cherolee Limited
ZG=Grand Cherokee European
Y1=Wrangler
X1=Cherokee
Z1=Grand Cherokee
KDX=Vehicles

AR = Use as Required - = Non Illustrated Part P.A.R. = Paint as Required

PUMP, OIL WITH REACTION SHAFT AUTOMATIC TRANSMISSION, 4 SPEED, 44RE GRAND CHEROKEE ZJ
Figure 21F-310

21F-310

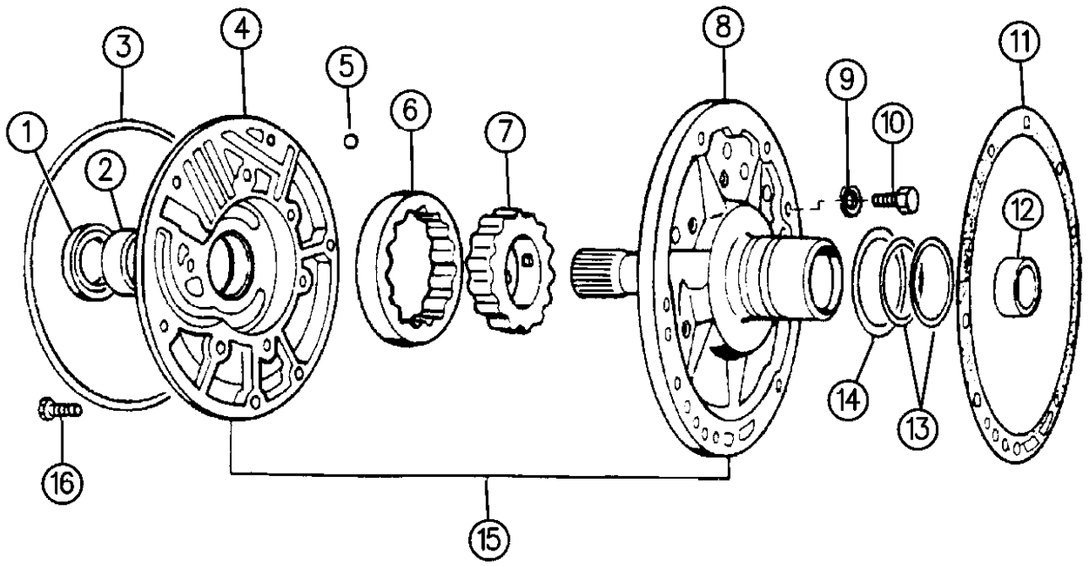

94J55 310

ITEM	PART NUMBER	QTY	BODY	MODEL	DESCRIPTION
	4713 108	1			GASKET and SEAL PACKAGE, Repair Front Pump
					Consists Of:
					1 - 4412475 SEAL, T/C Impeller Hub
					1 - 2204709 SEAL, Oil Pump Hsg.
					2 - 4471874 SEAL RING, Reaction Shaft Support
					2 - 1401221 SEAL RING, Input Shaft Front
					1 - 4028333 SEAL RING, Rr. Clutch Retainer
					1 - 4617840 GASKET, T/C Reaction Shaft Support
					1 - K685-2070 Instruction Sheet
1	4412 475	1			SEAL, T/C Impeller Hub, 57.25mm O.D.
2	2466 796	1			BUSHING, Frt. Pump Hsg.
3	2204 709	1			SEAL, Frt. Pump Hsg. 8-17/64" O.D.
4		1			HOUSING, w/Bushing, Rotors and Seal, Frt. Pump (Serviced in Assy. Item No. 15)
5	0104 918	AR			BALL, Reaction Shaft Suppt., 1/4" Dia.
6		1			ROTOR, (Serviced in Assy.)
7		1			ROTOR, (Serviced in Assy.)
8		1			SHAFT, w/Support, Reaction (Serviced in Item No. 15)
9		6			LOCK WASHER, (Not Serviced) ***
10	0179 815	6			SCREW, Support, 5/16-18 x 11/16"
11	4617 840	1			GASKET, Reaction Shaft Support
12	4058 635	1			BUSHING, Reaction Shaft
13	4471 874	2			RING, Seal Reaction Shaft Support, 2-1/16" I.D.
14	4617 786	2			WASHER, Frt. Clutch Thrust
15	4778 552	1			PUMP ASSEMBLY, Oil, Housing, Support and Reaction Shaft, w/ Lock-Up ***
16	6023 943	6			SCREW, w/Washer, Hsg. 5/16-18 x 1-3/8"

MODEL CODES:

72=2 DR Wagon
74=4 DR Wagon
77=Open Body 93" Whlbase
78=Open Body 103" Whlbase - Export
T=2WD
J,N=4WD
U=4WD (RHD)

BODY STYLES:

YJ=Wrangler (4X4) "S"
Weangler (4X4) SE
Wrangler (4X4) Sahara
Wrangler (4X4) Renegade
XJ=Cherokee SE
Cherokee Sport
Cherokee Country
ZJ=Grand Cherokee SE
Grand Cherokee Laredo
Grand Cherolee Limited
ZG=Grand Cherokee European
Y1=Wrangler
X1=Cherokee
Z1=Grand Cherokee
KDX=Vehicles

AR = Use as Required - = Non Illustrated Part P.A.R. = Paint as Required

CLUTCH, FRONT AND REAR WITH GEAR TRAIN AUTOMATIC TRANSMISSION, 4 SPEED, 44RE GRAND CHEROKEE ZJ
Figure 21F-410

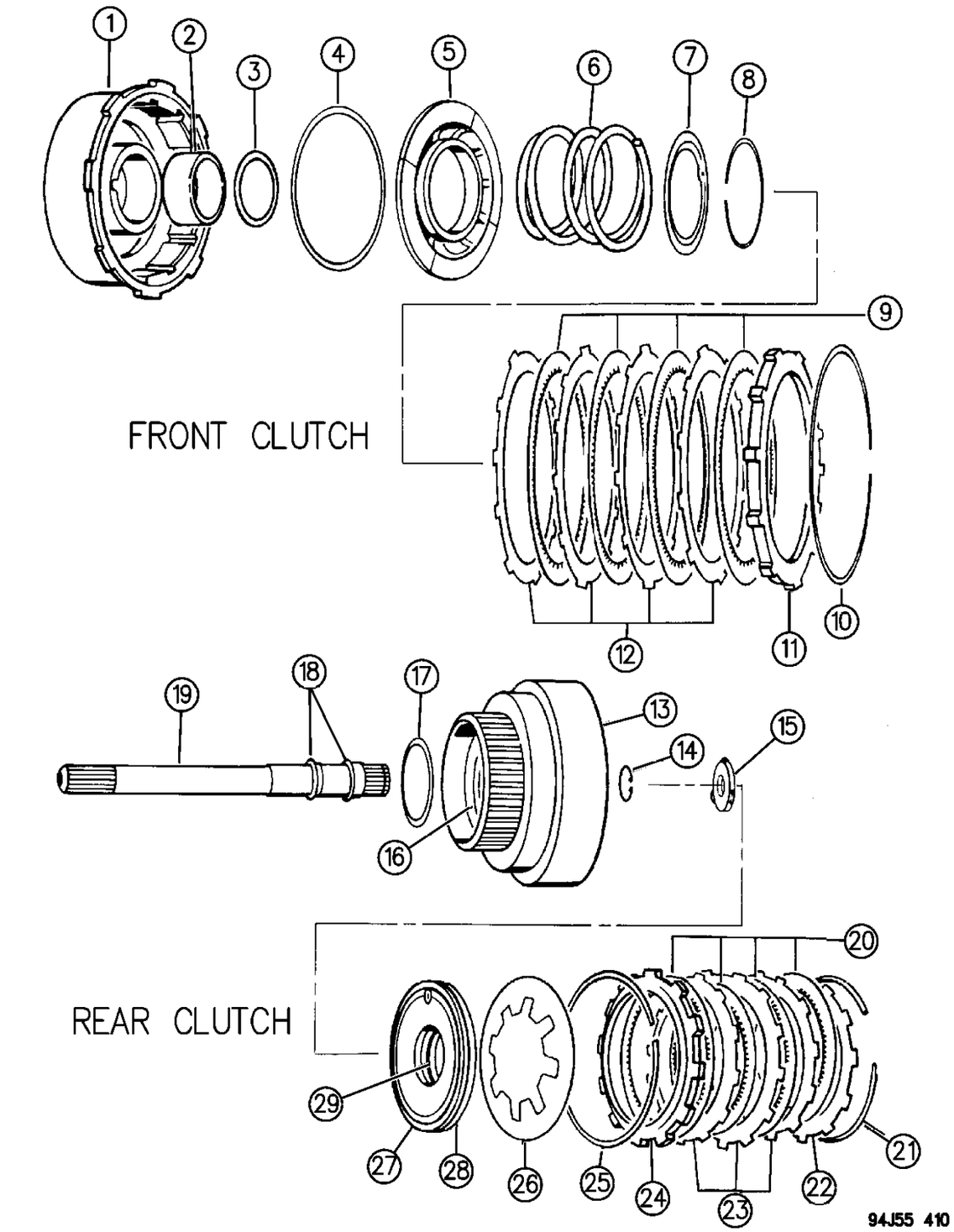

ITEM	PART NUMBER	QTY	BODY	MODEL	DESCRIPTION
	5252 926	1			SEAL and WASHER PACKAGE, Front and Rear Clutch
					Consists Of:
					1 - 3515176 SEAL, Frt.Clutch Piston, Inner
					1 - 4058487 SEAL, Frt.Clutch Piston, Outer
					1 - 2538510 SEAL, Rear Clutch Piston, Inner
					1 - 2538695 SEAL, Rear Clutch Piston, Outer
					1 - 4505185 WASHER, Intermediate Shaft Thrust
					1 - 4505186 WASHER, Intermediate Shaft Thrust
					1 - 4505187 WASHER, Intermediate Shaft Thrust
					1 - 4058982 PLATE, Intermediate Shaft Thrust
1	4617 153	1			RETAINER, w/Bushings, w/o Seals Frt. Clutch
2	4617 157	1			BUSHING, Frt. Clutch Retainer, Front
	4617 159	1			Rear
3	3515 176	1			SEAL, Frt. Clutch Piston, Rubber, Inner
4	4058 487	1			SEAL, Frt. Clutch Piston, Outer
5	4617 154	1			PISTON, Frt. Clutch
	0147 483	1			BALL, 3/16" Dia.
6	4329 809	1			SPRING, Frt. Clutch Piston, Blue
7	4617 516	1			RETAINER, Frt. Clutch Piston Spring
	0147 483	1			BALL, Check Valve, 3/16" Dia.
8	1942 400	1			SNAP RING, Frt. Clutch Inner, 2-7/16" O.D.
9	4617 362	4			DISC, Frt. Clutch
10	3410 571	1			SNAP RING, Frt. Clutch, Outer
11	4617 176	1			PLATE, Frt. Clutch Pressure
12	1942 403	4			PLATE, Frt. Clutch
13	4505 199	1			RETAINER, Rear Clutch
	0147 483	1			BALL, Check Valve, 3/16" Dia.
14	6022 859	1			SNAP RING, Input Shaft 57/64", .059" Thk.
15					WASHER, Intermediate Shaft Thrust, w/3 Point Bronze Face
	4505 185	AR			.052" Thk., Gray
	4505 186	AR			.068" Thk., Red
	4505 187	AR			.083" Thk., Green
16	4028 333	1			SEAL, Rear Cl. Retainer Ring, 1-1/2" O.D., .009 Thk.
17	4617 786	2			WASHER, Frt. Clutch Thrust, 2-5/8" O.D.
18	1401 221	2			RING, Input Shaft Seal, Frt. and Rear
19	4505 189	1			SHAFT, Input
20	4713 880	4			DISC, Rear Clutch
21					SNAP RING, Rear Cl. Retainer, 5-11/32" O.D.
	4130 761	AR			.060" Thk.
	4539 121	AR			.076" Thk.
	4539 122	AR			.098" Thk.
	4539 123	AR			.095" Thick

MODEL CODES:

72=2 DR Wagon
74=4 DR Wagon
77=Open Body 93" Whlbase
78=Open Body 103" Whlbase - Export
T=2WD
J,N=4WD
U=4WD (RHD)

BODY STYLES:

YJ=Wrangler (4X4) "S"
Weangler (4X4) SE
Wrangler (4X4) Sahara
Wrangler (4X4) Renegade
XJ=Cherokee SE
Cherokee Sport
Cherokee Country
ZJ=Grand Cherokee SE
Grand Cherokee Laredo
Grand Cherolee Limited
ZG=Grand Cherokee European
Y1=Wrangler
X1=Cherokee
Z1=Grand Cherokee
KDX=Vehicles

AR = Use as Required - = Non Illustrated Part P.A.R. = Paint as Required

CLUTCH, FRONT AND REAR WITH GEAR TRAIN AUTOMATIC TRANSMISSION, 4 SPEED, 44RE GRAND CHEROKEE ZJ
Figure 21F-410

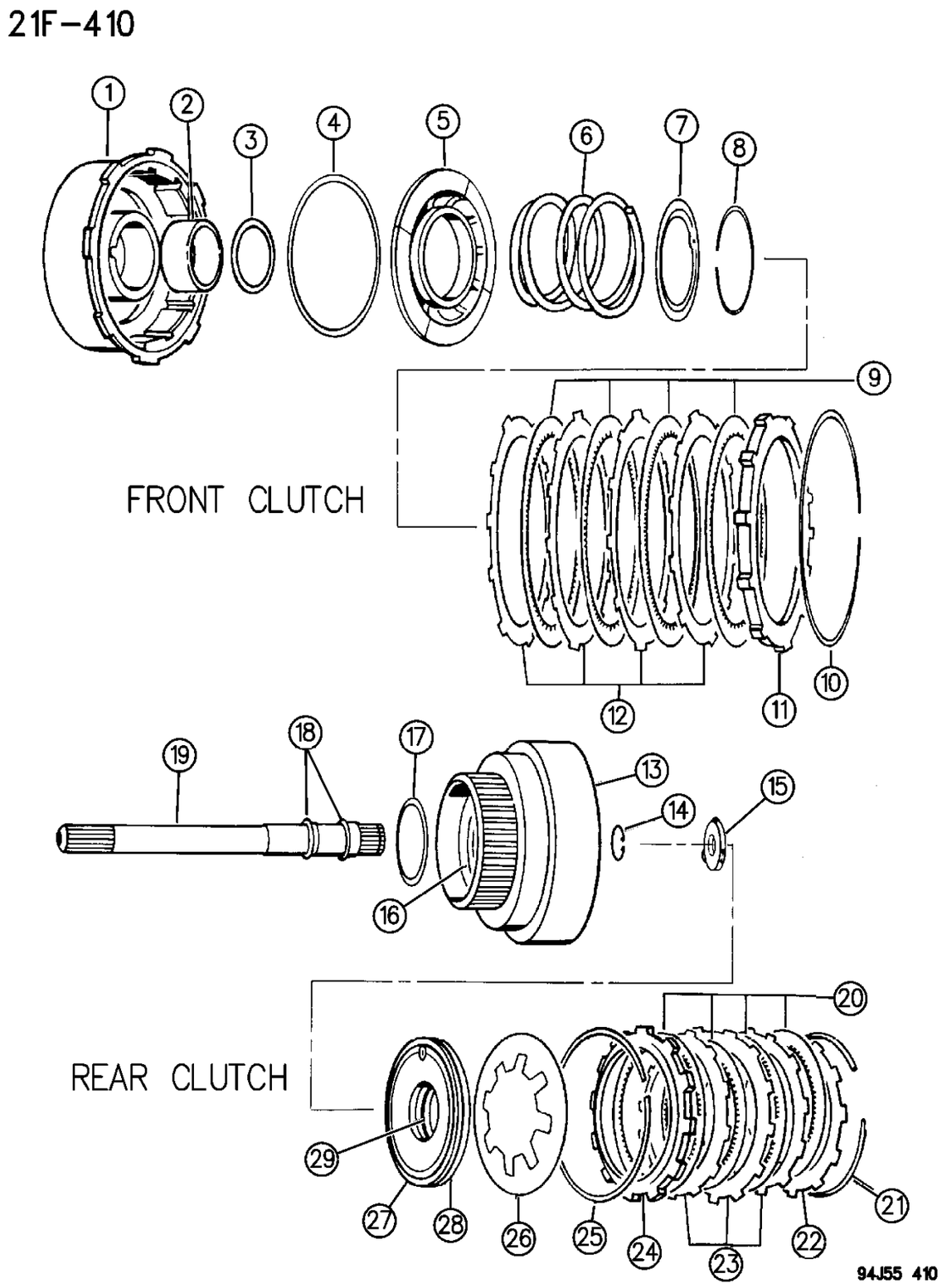

ITEM	PART NUMBER	QTY	BODY	MODEL	DESCRIPTION
	4539 124	AR			.107" Thick
22	4617 176	1			PLATE, Rr. Clutch Pressure, Rear
23	1942 403	3			PLATE, Rear Clutch
24	2466 281	1			PLATE, Rear Clutch Pressure, Front
25	2466 283	1			SPRING, Rear Clutch Wave
26	4617 191	1			SPRING, Rear Clutch Piston
27	2538 695	1			SEAL, Rear Clutch Piston, Rubber, Outer
28	3515 716	1			PISTON, Rear Clutch
29	2538 510	1			SEAL, Rear Clutch Piston, Rubber, Inner

MODEL CODES:

72=2 DR Wagon
74=4 DR Wagon
77=Open Body 93" Whlbase
78=Open Body 103" Whlbase - Export
T=2WD
J,N=4WD
U=4WD (RHD)

BODY STYLES:

YJ=Wrangler (4X4) "S"
Weangler (4X4) SE
Wrangler (4X4) Sahara
Wrangler (4X4) Renegade
XJ=Cherokee SE
Cherokee Sport
Cherokee Country
ZJ=Grand Cherokee SE
Grand Cherokee Laredo
Grand Cherolee Limited
ZG=Grand Cherokee European
Y1=Wrangler
X1=Cherokee
Z1=Grand Cherokee
KDX=Vehicles

AR = Use as Required - = Non Illustrated Part P.A.R. = Paint as Required

GEAR TRAIN AND INTERMEDIATE SHAFT AUTOMATIC TRANSMISSION, 4 SPEED, 44RE GRAND CHEROKEE ZJ
Figure 21F-420

21F-420B

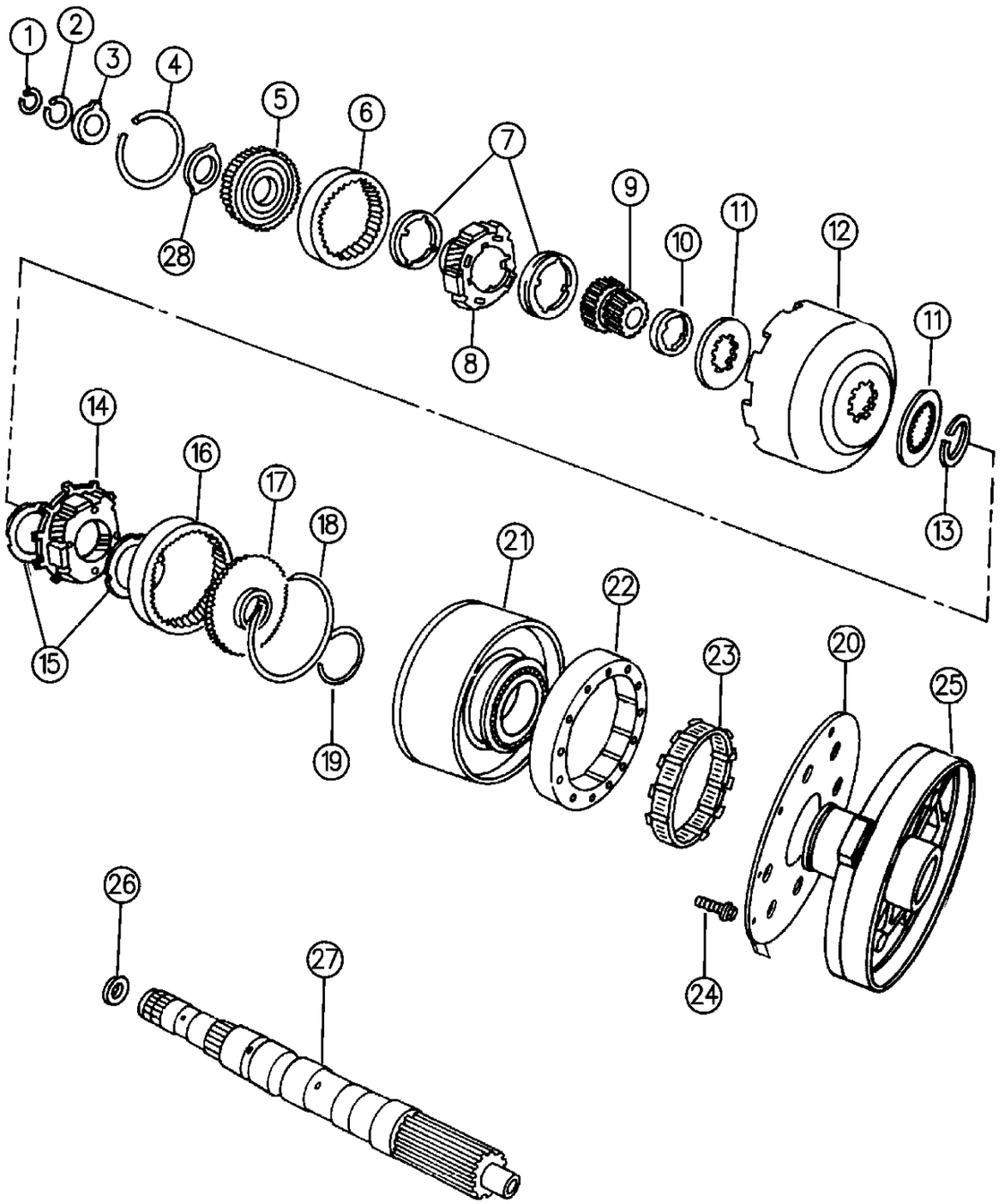

ITEM	PART NUMBER	QTY	BODY	MODEL	DESCRIPTION
1					SNAP RING, Intermediate Shaft
	6026 289	AR			.946" I.D., .040" Thk.
	6030 938	AR			.910" I.D., .062" Thk.
	6030 404	AR			.906" I.D., .084" Thk.
2	6030 576	1			SNAP RING, Frt. Annulus Gear Support, 1-3/8" I.D.
3	3681 969	1			WASHER, Frt. Annulus Gear Support, Thrust w/Lip, 2-1/8" O.D.
4	4130 513	1			SNAP RING, Frt. Annulus Gear, 4-5/8" O.D.
5	4617 774	1			SUPPORT, w/Bushing, Frt. Annulus Gear
6	4130 512	1			GEAR, Front Annulus
7	4130 518	2			WASHER, Frt. Carrier Thrust, 2-5/8" I.D., w/4 Tabs I.D.
8	4130 514	1			CARRIER ASSEMBLY, Front Planet Pinion
9	4130 685	1			GEAR, w/Bushing, Sun 38T-28T
10	4130 736	1			SPACER, Sun Gear, 4 Inner Teeth, 2" O.D.
11	4471 566	2			PLATE, Sun Gear Driving Shell, Thrust
12	4531 288	1			SHELL, Sun Gear Driving
13	1942 439	1			RING, Sun Gear Driving Shell, Lock 1-41/64" O.D.
14	4431 438	1			CARRIER ASSEMBLY, Rear Planet Pinion
15	3681 935	2			WASHER, Rr. Carrier Thrust, 2" I.D., w/4 Tabs O.D.
16	3743 184	1			GEAR, Rear Annulus
17	3515 501	1			SUPPORT, Rr. Annulus Gear, 62T-28T, 4" O.D.
18	1942 444	1			SNAP RING, Rr. Annulus Gear, 4-1/16" O.D.
19	6033 480	1			RING, Reverse Drum Retaining
20	4471 564	1			GASKET, O/Drive Cl. Piston Retainer To Case
21	4637 956	1			DRUM, Reverse
22	4431 690	1			CAM, "O" Running Clutch
23	4431 432	1			CLUTCH, w/Rollers and Springs, "O" Running Clutch
24	6033 616	6			SCREW, Cam to Case, 1/4-28 x 7/8"
25	4617 246	1			RETAINER, Piston
26	4505 188	1			PLATE, Intermediate Shaft Thrust, .060" Thk.
27	4617 604	1			SHAFT, w/Plug, Intermediate
28	4617 775	1			PLATE, Front Annulus Gear Support Thrust, 2.168"O.D., 1.515"., .030" Thick

MODEL CODES:

72=2 DR Wagon
74=4 DR Wagon
77=Open Body 93" Whlbase
78=Open Body 103" Whlbase - Export
T=2WD
J,N=4WD
U=4WD (RHD)

BODY STYLES:

YJ=Wrangler (4X4) "S"
Weangler (4X4) SE
Wrangler (4X4) Sahara
Wrangler (4X4) Renegade
XJ=Cherokee SE
Cherokee Sport
Cherokee Country
ZJ=Grand Cherokee SE
Grand Cherokee Laredo
Grand Cherolee Limited
ZG=Grand Cherokee European
Y1=Wrangler
X1=Cherokee
Z1=Grand Cherokee
KDX=Vehicles

AR = Use as Required - = Non Illustrated Part P.A.R. = Paint as Required

« RETURN TO GROUP INDEX

OUTPUT SHAFT AUTOMATIC TRANSMISSION, 4 SPEED, 44RE GRAND CHEROKEE ZJ
Figure 21F-430

21F-430

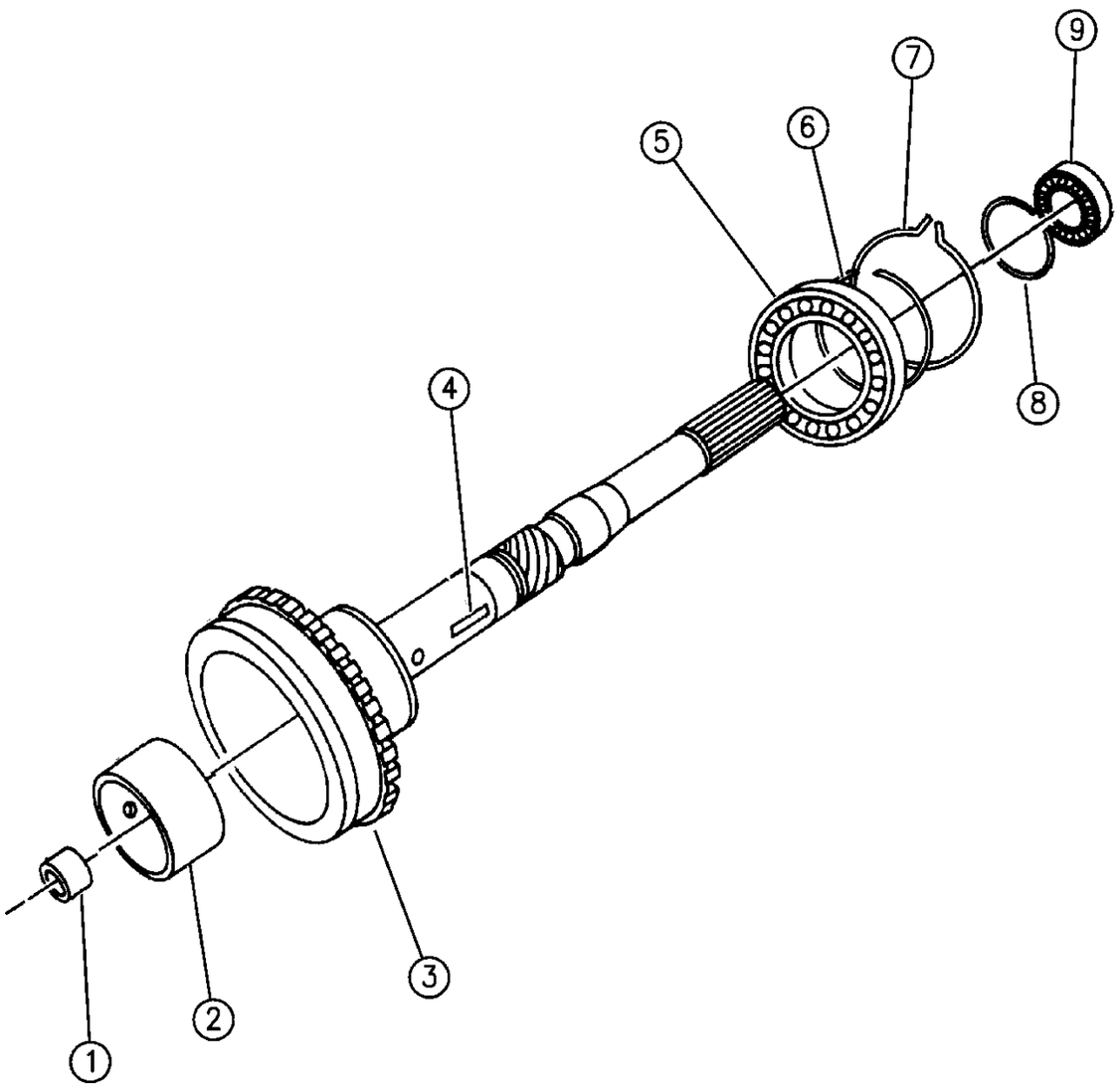

94J55 430

ITEM	PART NUMBER	QTY	BODY	MODEL	DESCRIPTION
1		1			BUSHING, O/P Shaft Pilot, (Serviced in O/P Shaft)
2					BUSHING, Not Serviced
3	4762 061	1		2WD	SHAFT ASSEMBLY, w/Key, Output ***
	4461 153	1		4WD	
4	4461 058	1			KEY, O/P Shaft Gov. Drive
5	4461 008	1			BEARING, O/P Shaft Front
6	4461 068	1			SNAP RING, O/P Shaft Front Beaaring
7	4461 057	1			SNAP RING, O/P Shaft Brg. to Case
8	4461 069	1			SNAP RING, O/P Shaft Rear Bearing
9	2466 224	1			BEARING, O/P Shaft, Rear, 2.8344 O.D.

MODEL CODES:

72=2 DR Wagon
74=4 DR Wagon
77=Open Body 93" Whlbase
78=Open Body 103" Whlbase - Export
T=2WD
J,N=4WD
U=4WD (RHD)

BODY STYLES:

YJ=Wrangler (4X4) "S"
Weangler (4X4) SE
Wrangler (4X4) Sahara
Wrangler (4X4) Renegade
XJ=Cherokee SE
Cherokee Sport
Cherokee Country
ZJ=Grand Cherokee SE
Grand Cherokee Laredo
Grand Cherolee Limited
ZG=Grand Cherokee European
Y1=Wrangler
X1=Cherokee
Z1=Grand Cherokee
KDX=Vehicles

AR = Use as Required - = Non Illustrated Part P.A.R. = Paint as Required

BANDS, REVERSE AND KICKDOWN WITH LINKAGE AUTOMATIC TRANSMISSION, 4 SPEED, 44RE GRAND CHEROKEE ZJ
Figure 21F-510

21F-510

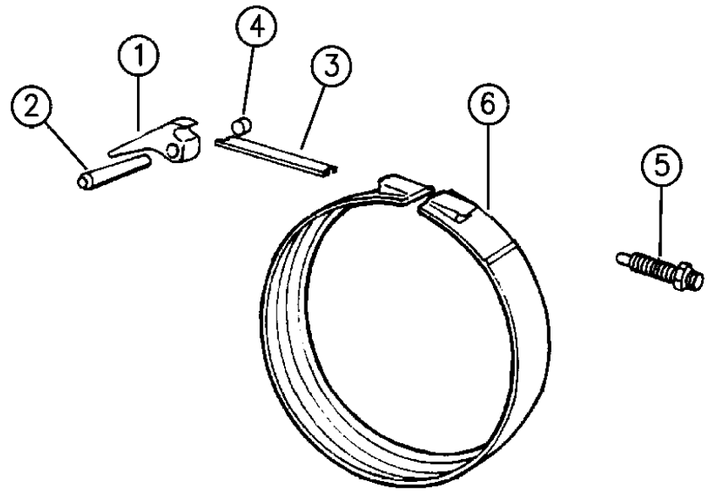

KICKDOWN BAND

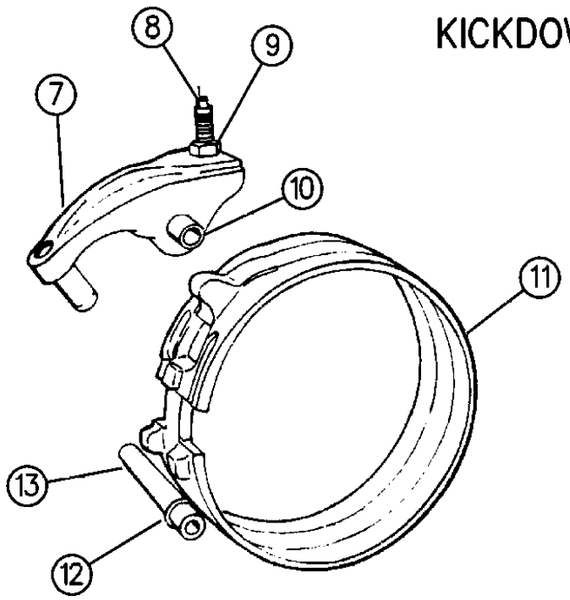

DOUBLE WRAP REVERSE BAND

ITEM	PART NUMBER	QTY	BODY	MODEL	DESCRIPTION
1	4202 764	1			LEVER, Kickdown Band, Use w/52118028,9027 Trans.
	5211 8264	1			w/52118353,8354 Trans.
2	4531 181	1			SHAFT, Kickdown Lever
3	3515 084	1			STRUT, Kickdown Band
4		1			PLUG, Shaft Lever, 1/4"-18 Pipe (Not Serviced)
5	1942 477	1			SCREW, Kickdown Band Adjusting
	0124 934	1			NUT, Kickdown Band Adj. Screw, 1/2-20
6	4617 899	1			BAND, Kickdown
7	4202 764	1			LEVER, w/Stem, Reverse Band
	4202 765	1			LEVER, Reverse Band
8	2538 472	1			SCREW, Reverse Band Adjusting
9	0114 942	1			NUT, Adj. Screw, Lock, 3/8-24
10	3410 102	1			SHAFT, Reverse Band Lever
11	4431 406	1			BAND, Reverse
12	6030 657	2			SEAL, Reverse Band Lever Shaft
13	3410 102	1			SHAFT, Reverse Band Reaction

MODEL CODES:

72=2 DR Wagon
74=4 DR Wagon
77=Open Body 93" Whlbase
78=Open Body 103" Whlbase - Export
T=2WD
J,N=4WD
U=4WD (RHD)

BODY STYLES:

YJ=Wrangler (4X4) "S"
Weangler (4X4) SE
Wrangler (4X4) Sahara
Wrangler (4X4) Renegade
XJ=Cherokee SE
Cherokee Sport
Cherokee Country
ZJ=Grand Cherokee SE
Grand Cherokee Laredo
Grand Cherolee Limited
ZG=Grand Cherokee European
Y1=Wrangler
X1=Cherokee
Z1=Grand Cherokee
KDX=Vehicles

94J55 510

AR = Use as Required - = Non Illustrated Part P.A.R. = Paint as Required

« RETURN TO GROUP INDEX

VALVE BODY AUTOMATIC TRANSMISSION, 4 SPEED, 44RE GRAND CHEROKEE ZJ
Figure 21F-710

21F-710

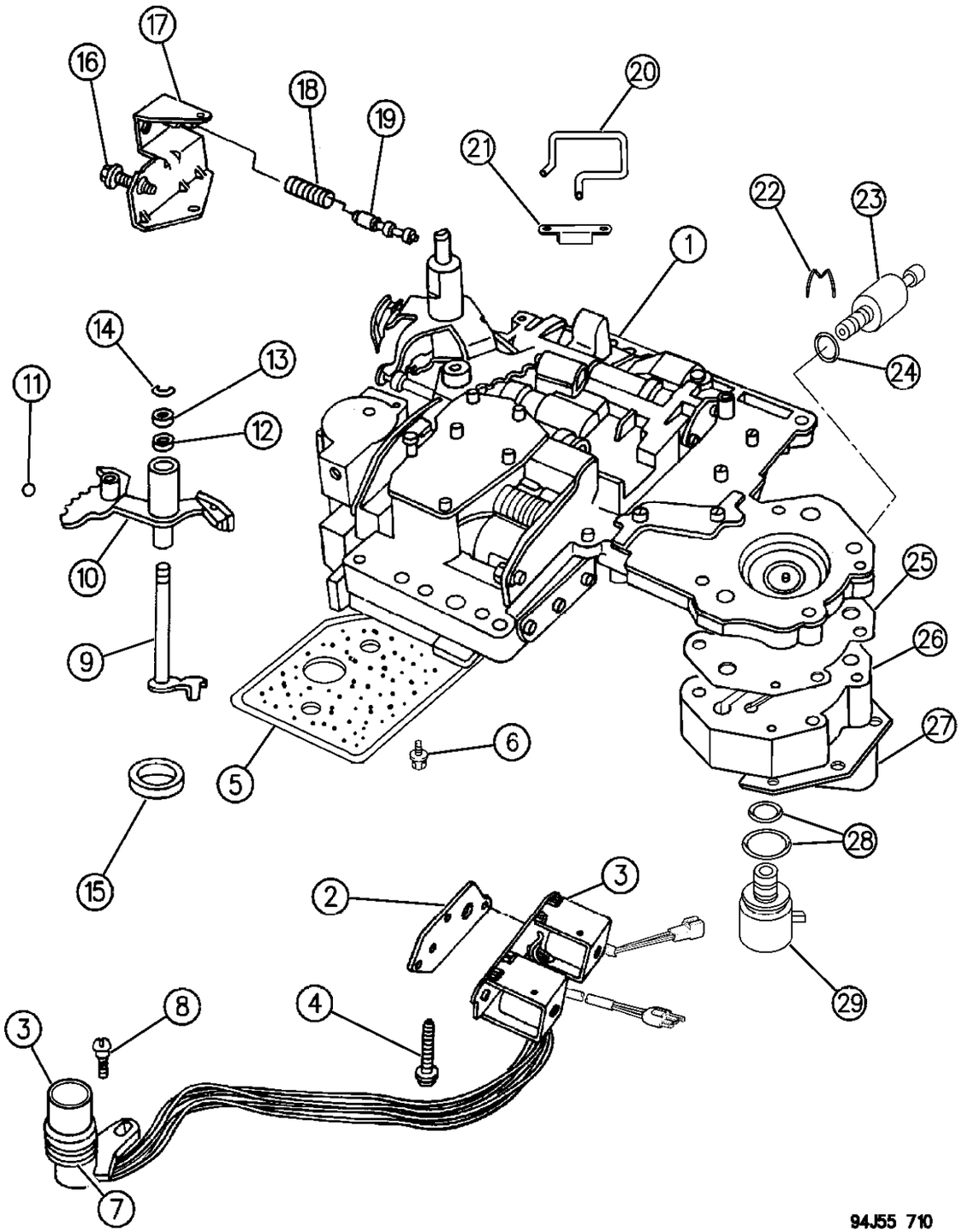

ITEM	PART NUMBER	QTY	BODY	MODEL	DESCRIPTION
	4863 933	1			GASKET and SEAL PACKAGE, Valve Body and Servo Recondition ***
					Consists Of:
					1 - 3878313 SCREEN, Regulator Valve
					1 - 4505098 SEAL, Manual Valve Shaft
					1 - 6028864 SEAL, K/Down, Inner Piston
					1 - 6030657 SEAL, Rev. Band Lever Shaft
					1 - 4202864 SEAL, Rev. Servo Piston
					1 - 2466548 SEAL, Throttle Lever Shaft
					1 - 4295875 GASKET, Trans. Oil Pan
					1 - 3743033 RING, Seal K/Dn. Servo Piston, Small
					1 - 4295966 RING, Seal K/Dn. Servo Piston, Large
					1 - 4295966 RING, Seal K/Dn. Servo Guide
					1 - 3743010 RING, Seal Accumulator Piston, Small
					1 - 3743013 RING, Seal Accumulator Piston, Large
					1 - 4431958 RING, Seal 3&4 Accum. Piston, Large
					1 - 4431959 RING, Seal 3&4 Accum. Piston, Small
					1 - 3515996 FILTER, Trans. Oil
					1 - 6033448 O-RING, Solenoid Wiring Connection
					1 - 4446194 GASKET, Solenoid Assy.
					1 - 6024336 SNAP RING, K/Down Inner Piston
					1 - 6028863 SNAP RING, K/Down Servo
					1 - 6027153 RING, Reverse Servo Plug
					1 - 2464464 SNAP RING, Rev. Servo Piston Spring Ret.
					1 - 6025031 SNAP RING, K/Down Servo Inner Piston
					1 - 3743014 SEAL RING, K/Down Servo Inner Piston
					1 - 6031410 O-RING, K/Down Servo Inner Piston
					1- 52118510 GASKET, Solenoid
					1- 4617216 GASKET, Transmission Governer Body
					1- 6031392 SNAP RING, Internal
					1- 1942486 SNAP RING, Transmission Kickdown Servo
1	5211 8708	1			VALVE BODY, and Transfer Plate Assy., w/Lock-Up Valve ***
2	4446 194	1			GASKET, Solenoid
3	4617 463	1			SOLENOID, w/Wiring and 8 Prong Connector, w/Overdrive and Lock-Up Valve
4	0181 071	3			SCREW, Valve Body to Case, 1/4-20 x 1-3/4"
5	3515 996	1			FILTER, Trans. Oil
6	6033 826	3			SCREW, Oil Filter
7	6034 748	1			O-RING, Solenoid Wiring Connector ***
8	6033 985	1			SCREW, Solenoid Wiring Conn. Mtg.
9	3681 227	1			LEVER, Throttle Valve
10	4617 439	1			LEVER, w/Insulator, Manual Valve

MODEL CODES:

72=2 DR Wagon
74=4 DR Wagon
77=Open Body 93" Whlbase
78=Open Body 103" Whlbase - Export
T=2WD
J,N=4WD
U=4WD (RHD)

BODY STYLES:

YJ=Wrangler (4X4) "S"
Weangler (4X4) SE
Wrangler (4X4) Sahara
Wrangler (4X4) Renegade
XJ=Cherokee SE
Cherokee Sport
Cherokee Country
ZJ=Grand Cherokee SE
Grand Cherokee Laredo
Grand Cherolee Limited
ZG=Grand Cherokee European
Y1=Wrangler
X1=Cherokee
Z1=Grand Cherokee
KDX=Vehicles

AR = Use as Required - = Non Illustrated Part P.A.R. = Paint as Required

VALVE BODY AUTOMATIC TRANSMISSION, 4 SPEED, 44RE GRAND CHEROKEE ZJ
Figure 21F-710

21F-710

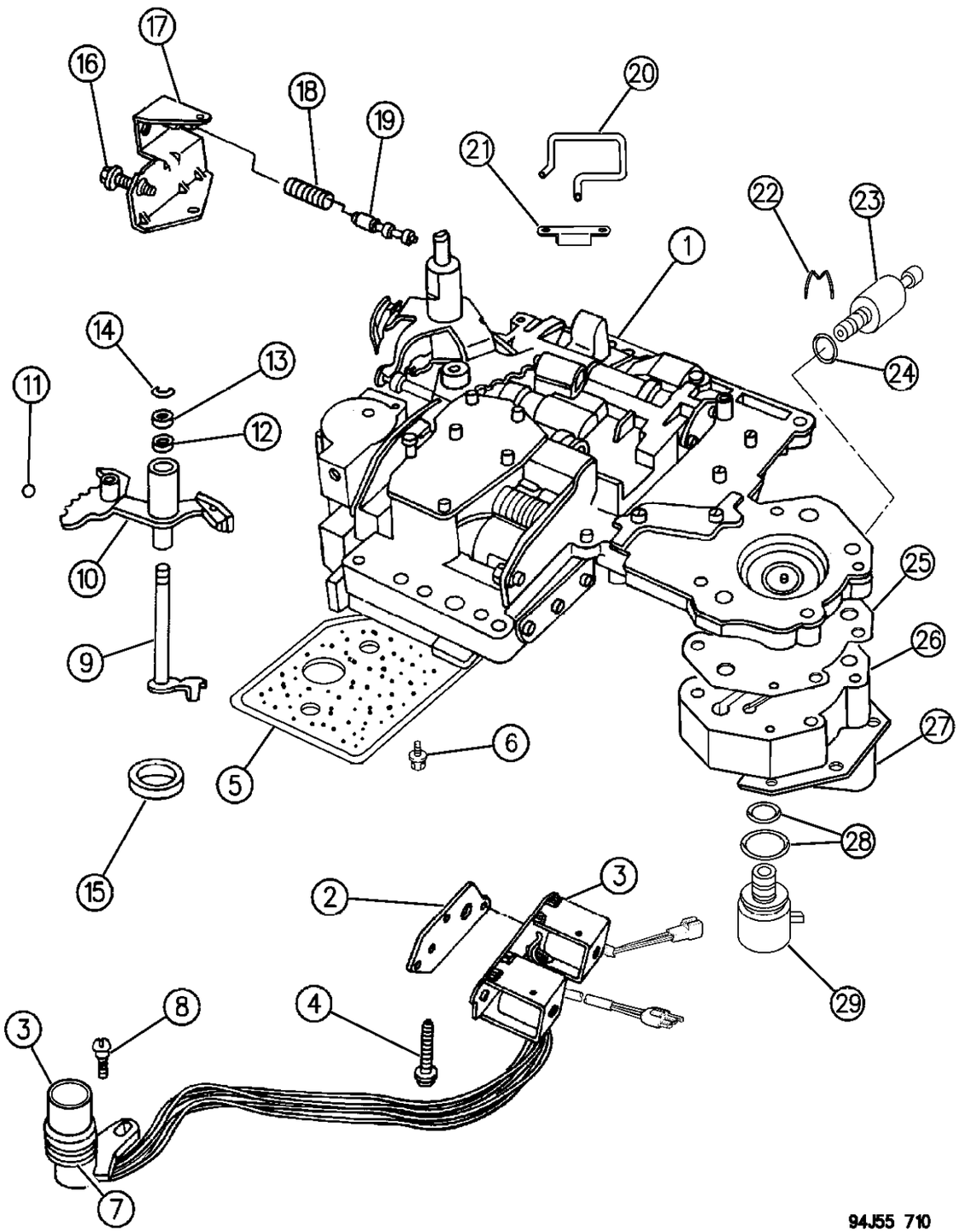

ITEM	PART NUMBER	QTY	BODY	MODEL	DESCRIPTION
11	0147 488	1			BALL, Manual Lever Detent, 11/32" Dia.
12	2466 548	1			SEAL, Throttle Lever Shaft, Rubber, 5/8" O.D.
13	2538 062	1			WASHER, Throttle Valve Lever Shaft
14	6025 857	1			E-RING, Throttle Valve Lever Shaft
15	4505 098	1			SEAL, Manual Valve , 1-1/4" O.D.
16	6030 609	1			SCREW, Throttle Pressure Adjusting
17	4617 010	1			BRACKET, Throttle Pressure Adj. Screw
18	4130 492	1			SPRING, Switch Valve
19	4505 036	1			VALVE, Trans. Switch
20	4617 008	1			Tube, Trans. Line Pressure Boost Valve Oil ***
21	4617 574	1			RETAINER, Line Pressure Boost Valve Oil Tube
22	4617 219	1			CLIP, Gov. Pressure Transducer Retaining
23	5602 7720	1			SENSOR, Trans. Pressure, 4 Prong Connector
24	6034 493	1			O-RING, Pressure Sensor, .369 I.D.
25	4617 216	1			GASKET, Gov. Pressure Solenoid Body
26		1			BODY, Gov. Pressure Solenoid (Serviced in Assy.)
27	4617 211	1			RETAINER, Gov. Pressure Solenoid
28	4723 549	1			O-RING PACKAGE, Solenoid, .494 I.D., .873 I.D. ***
29	4617 210	1			SOLENOID, Trans. Governor Pressure, 2 Prong Connector
	3878 313	1			SCREEN, Regulator Valve (Not Shown)
	4348 907	1			SPRING, Limit Valve (Not Shown)

MODEL CODES:

72=2 DR Wagon
74=4 DR Wagon
77=Open Body 93" Whlbase
78=Open Body 103" Whlbase - Export
T=2WD
J,N=4WD
U=4WD (RHD)

BODY STYLES:

YJ=Wrangler (4X4) "S"
Weangler (4X4) SE
Wrangler (4X4) Sahara
Wrangler (4X4) Renegade
XJ=Cherokee SE
Cherokee Sport
Cherokee Country
ZJ=Grand Cherokee SE
Grand Cherokee Laredo
Grand Cherolee Limited
ZG=Grand Cherokee European
Y1=Wrangler
X1=Cherokee
Z1=Grand Cherokee
KDX=Vehicles

AR = Use as Required - = Non Illustrated Part P.A.R. = Paint as Required

SERVOS, ACCUMULATOR PISTON AND SPRING AUTOMATIC TRANSMISSION, 4 SPEED, 44RE GRAND CHEROKEE ZJ
Figure 21F-720

21F-720

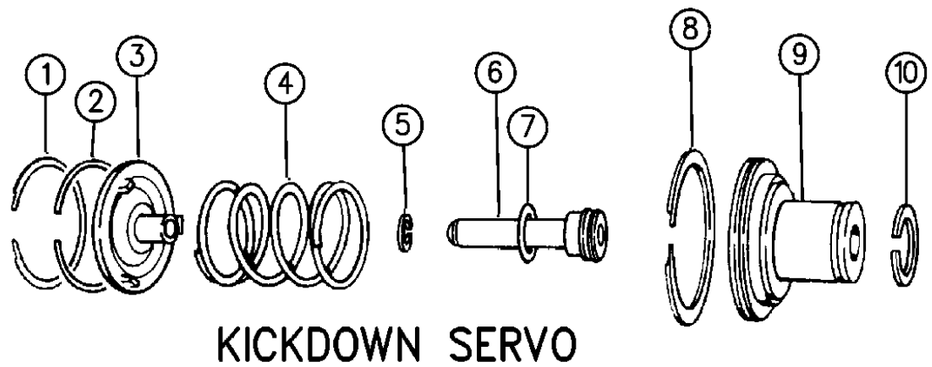

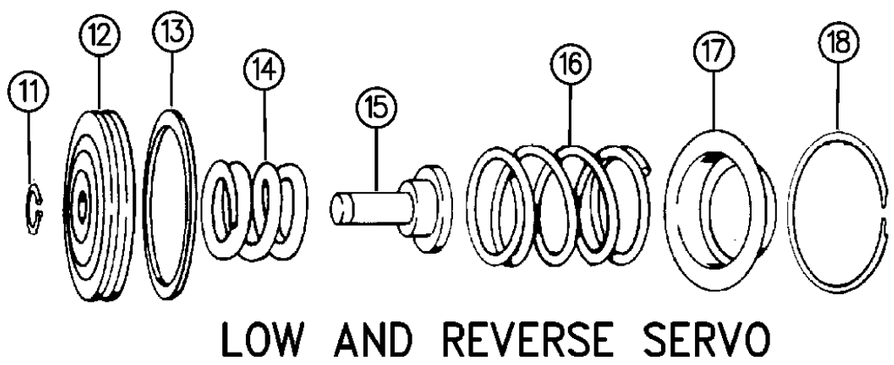

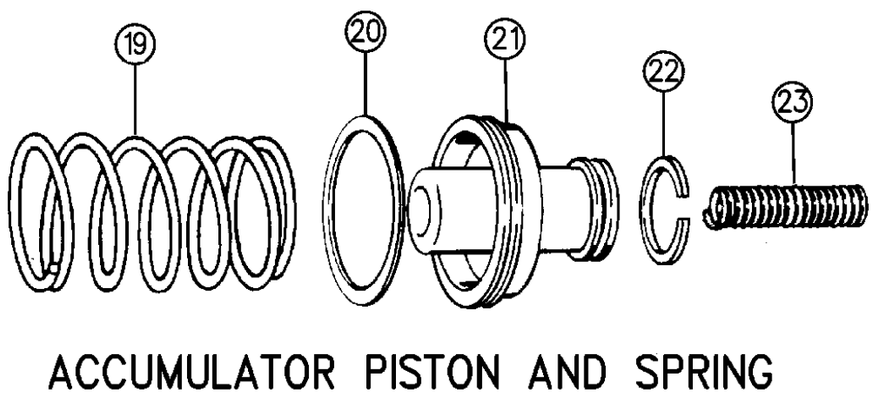

94J55 720

ITEM	PART NUMBER	QTY	BODY	MODEL	DESCRIPTION
1	6028 863	1			SNAP RING, Kickdown Servo Guide, 2-3/8" I.D.
2	4295 966	1			SEAL RING, Kickdown Servo Guide, 2-3/8" I.D.
3	3410 332	1			GUIDE, Kickdown Servo
4	4531 119	1			SPRING, K/Down Servo Piston
5	6024 336	1			SNAP RING, Inner, 1-1/8" I.D.
6	4058 780	1			ROD, Kickdown Servo Piston
7	6028 864	1			SEAL, Kickdown Rod
8	4295 966	1			SEAL RING, Kickdown Servo Piston, Large 2-3/8" O.D.
9	4058 777	1			PISTON, Kickdown Servo
	6031 410	1			O-RING, Kickdown Servo Inner Piston
10	3743 033	1			SEAL RING, Kickdown Servo Piston, Small 1" O.D.
11	6027 153	1			RING, Reverse Servo Piston Plug, 7/16" I.D.
12	2801 271	1			PISTON, Reverse Servo
13	4202 864	1			SEAL, Reverse Servo Piston
14	4130 824	1			SPRING, Reverse Servo Cushion
15	3743 353	1			PLUG, Reverse Servo Piston
16	2801 274	1			SPRING, Reverse Servo Piston
17	2464 463	1			RETAINER, Reverse Servo Piston Spring
18	2464 464	1			SNAP RING, Reverse Servo Piston Spring Retainer
19	4531 259	1			SPRING, Accumulator, Lower
20	3743 013	1			SEAL RING, Accumulator Piston, Large
21	3743 650	1			PISTON, Accumulator
22	3743 010	1			SEAL RING, Accumulator Piston, Small
23	3515 114	1			SPRING, Upper

MODEL CODES:

72=2 DR Wagon
74=4 DR Wagon
77=Open Body 93" Whlbase
78=Open Body 103" Whlbase - Export
T=2WD
J,N=4WD
U=4WD (RHD)

BODY STYLES:

YJ=Wrangler (4X4) "S"
Weangler (4X4) SE
Wrangler (4X4) Sahara
Wrangler (4X4) Renegade
XJ=Cherokee SE
Cherokee Sport
Cherokee Country
ZJ=Grand Cherokee SE
Grand Cherokee Laredo
Grand Cherolee Limited
ZG=Grand Cherokee European
Y1=Wrangler
X1=Cherokee
Z1=Grand Cherokee
KDX=Vehicles

AR = Use as Required - = Non Illustrated Part P.A.R. = Paint as Required

« RETURN TO GROUP INDEX

PARKING SPRAG AUTOMATIC TRANSMISSION, 4 SPEED, 44RE GRAND CHEROKEE ZJ
Figure 21F-730

21F-730

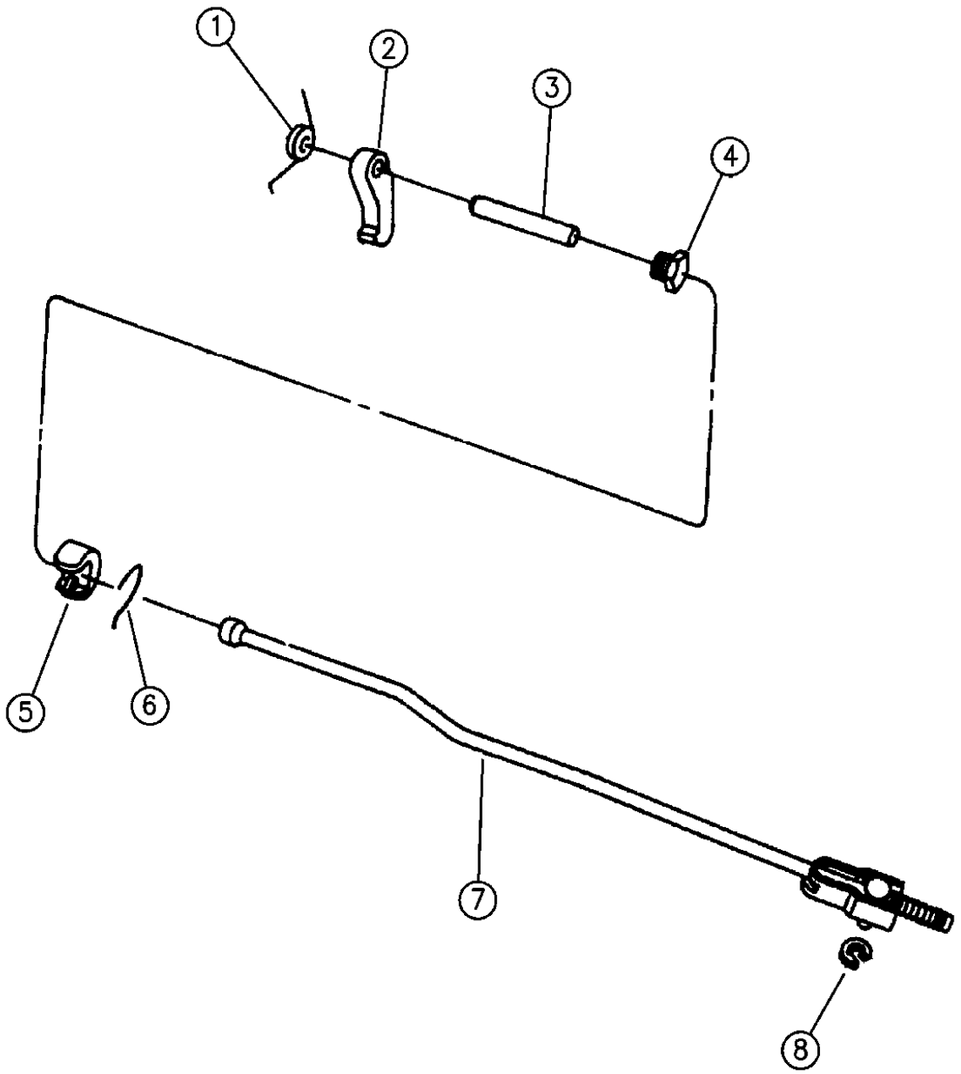

94J55 730

ITEM	PART NUMBER	QTY	BODY	MODEL	DESCRIPTION
1	2466 909	1			SPRING, Parking Sprag
2	4471 415	1			SPRAG, Parking (5/8" Thick) ***
3	2466 892	1			SHAFT, Parking Sprag
4	1798 191	1			PLUG, Shaft Retaining
5	2538 042	1			PLUG, Parking Sprag Reaction
6	2538 034	1			SNAP RING, Reaction Plug
7	4431 748	1			ROD ASSEMBLY, Parking Sprag ***
8	1626 749	1			E-CLIP, Rod ***

MODEL CODES:

72=2 DR Wagon
74=4 DR Wagon
77=Open Body 93" Whlbase
78=Open Body 103" Whlbase - Export
T=2WD
J,N=4WD
U=4WD (RHD)

BODY STYLES:

YJ=Wrangler (4X4) "S"
Weangler (4X4) SE
Wrangler (4X4) Sahara
Wrangler (4X4) Renegade
XJ=Cherokee SE
Cherokee Sport
Cherokee Country
ZJ=Grand Cherokee SE
Grand Cherokee Laredo
Grand Cherolee Limited
ZG=Grand Cherokee European
Y1=Wrangler
X1=Cherokee
Z1=Grand Cherokee
KDX=Vehicles

AR = Use as Required - = Non Illustrated Part P.A.R. = Paint as Required

« RETURN TO GROUP INDEX

CLUTCH, OVERDRIVE WITH GEAR TRAIN AUTOMATIC TRANSMISSION, 4 SPEED, 44RE GRAND CHEROKEE ZJ
Figure 21F-1010

21F-1010

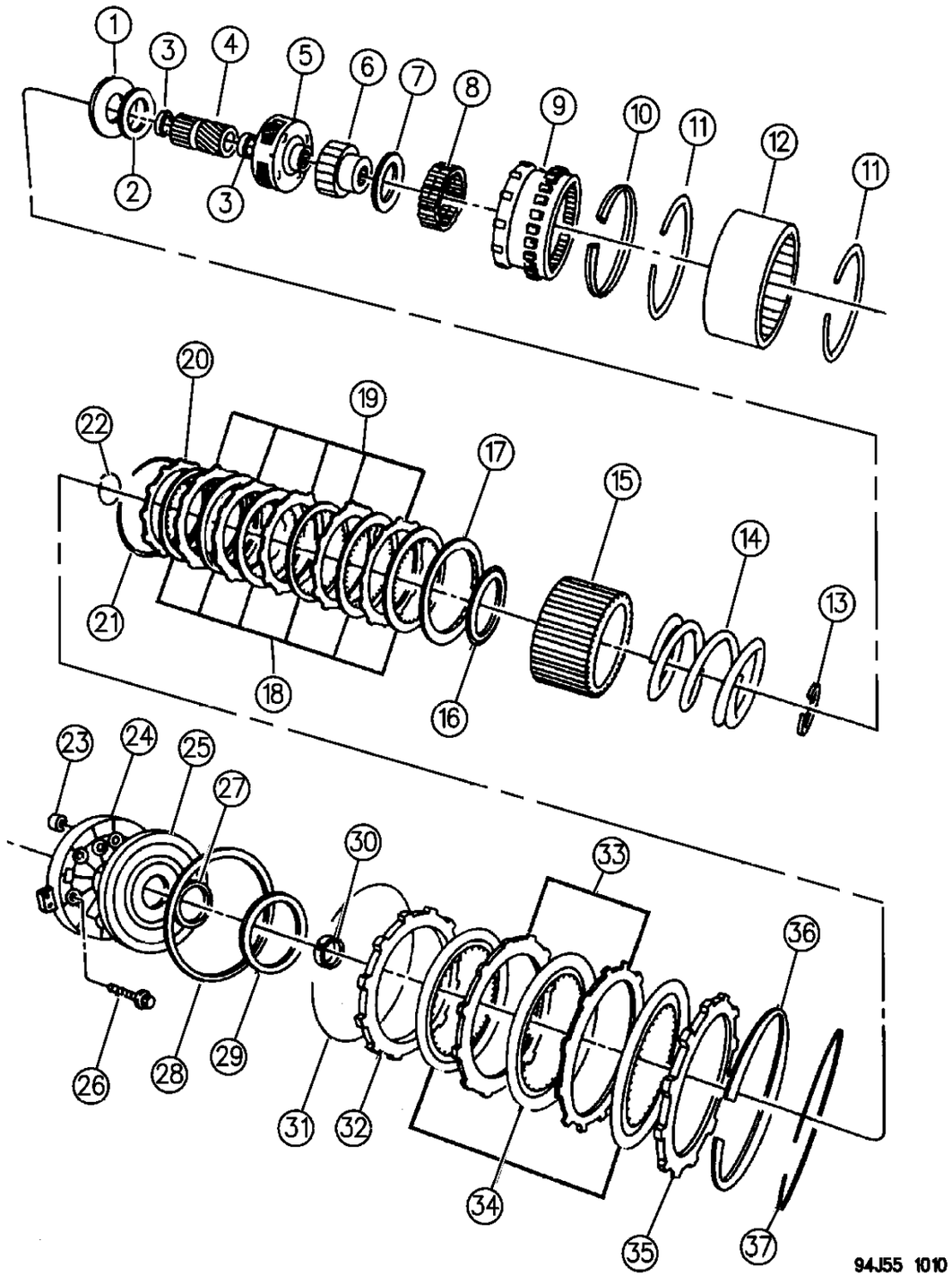

ITEM	PART NUMBER	QTY	BODY	MODEL	DESCRIPTION
1	4740 774	1			PLATE PACKAGE, w/Bearing, Direct Clutch Spring, Thrust ***
2		1			BEARING, O/Drive, Thrust (Serviced in 4740774 Plate Pkg.)
3		2			BUSHING, O/Drive Sun Gear (Serv. in Sun Gear)
4	4778 742	1			GEAR, O/Drive Sun ***
5	4798 520	1			CARRIER ASSEMBLY, O/Drive Planet Pinion (4 Pinion) ***
6	4461 124	1			RACE, O/Drive "O" Running Clutch
7	4461 014	1			BEARING, O/Drive Race, Thrust
8	4461 015	1			CLUTCH ASSEMBLY, w/Rollers and Springs, O/Drive "O" Running
9	4761 010	1			GEAR, O/Drive Annulus ***
10	4461 059	1			SNAP RING, O/Drive Annulus Gear, 5-1/4" O.D.
11	4461 060	2			SNAP RING, Direct Clutch Drum to Annulus, 6" O.D.
12	4461 040	1			DRUM, Direct Clutch
13	4461 063	1			SNAP RING, Direct Clutch Spring Plate, 2-3/16" O.D.
14	4461 027	1			SPRING, Direct Clutch Coil
15	4461 072	1			HUB, Direct Clutch Spring Sliding
16	4446 724	1			BEARING, O/Drive Clutch Piston, Thrust
17	4461 030	1			PLATE, Direct Clutch Pressure
18	4461 042	8			DISC, Direct Clutch
19	4461 054	7			PLATE, Direct Clutch
20	4461 031	1			PLATE, Direct Clutch Reaction
21	4461 032	1			SPRING, Direct Clutch Wave
22	4461 064	1			SNAP RING, Direct Clutch Spring Sliding Hub, Round 1-7/8" O.D.
23	4412 583	1			FILTER, Piston Retainer
24	4617 246	1			RETAINER, O/Drive Clutch Piston
25	4431 695	1			PISTON, O/Drive Clutch
26	6033 479	6			SCREW, Retainer to Case, 1/4-28 x 1-5/8"
27	4431 697	1			SEAL, O/Drive Clutch Piston, Inner
28	4431 696	1			SEAL, O/Drive Clutch Piston, Outer
29					PLATE, O/Drive Clutch Piston, Selective Thrust
	4431 730	AR			.108 - .110" Thk.
	4431 585	AR			.123 - .125" Thk.
	4431 731	AR			.138 - .140" Thk.
	4431 586	AR			.153 - .155" Thk.
	4431 732	AR			.168 - .170" Thk.
	4431 587	AR			.183 - .185" Thk.
	4431 733	AR			.198 - .200" Thk.
	4431 588	AR			.213 - .215" Thk.
	4431 734	AR			.228 - .230" Thk.
	4431 590	AR			.243 - .245" Thk.
30					SPACER, Intermediate Shaft, Selective
	4431 916	AR			.158" Thk.

MODEL CODES:

72=2 DR Wagon
74=4 DR Wagon
77=Open Body 93" Whlbase
78=Open Body 103" Whlbase - Export
T=2WD
J,N=4WD
U=4WD (RHD)

BODY STYLES:

YJ=Wrangler (4X4) "S"
Weangler (4X4) SE
Wrangler (4X4) Sahara
Wrangler (4X4) Renegade
XJ=Cherokee SE
Cherokee Sport
Cherokee Country
ZJ=Grand Cherokee SE
Grand Cherokee Laredo
Grand Cherolee Limited
ZG=Grand Cherokee European
Y1=Wrangler
X1=Cherokee
Z1=Grand Cherokee
KDX=Vehicles

AR = Use as Required - = Non Illustrated Part P.A.R. = Paint as Required

CLUTCH, OVERDRIVE WITH GEAR TRAIN AUTOMATIC TRANSMISSION, 4 SPEED, 44RE GRAND CHEROKEE ZJ
Figure 21F-1010

21F-1010

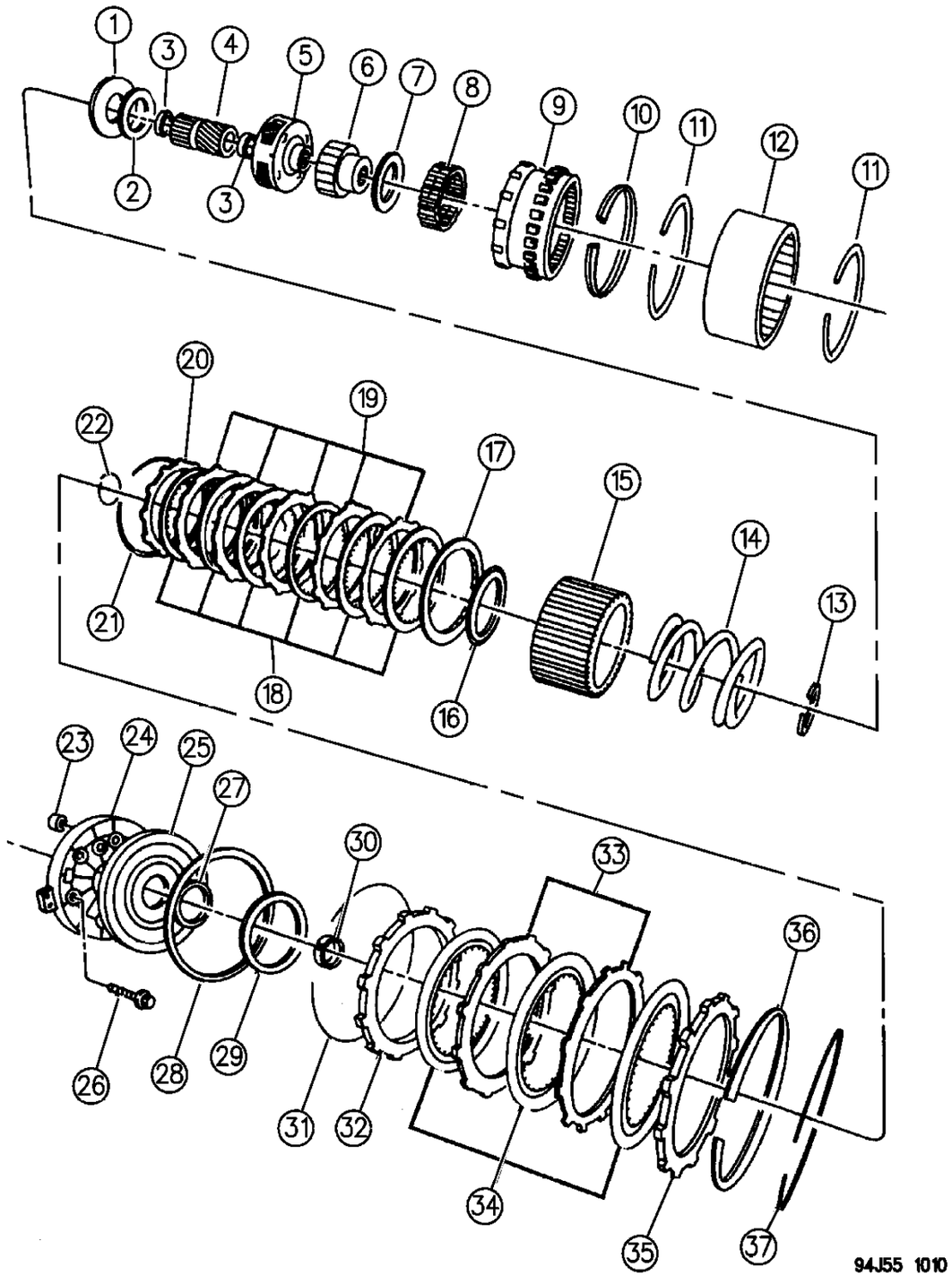

ITEM	PART NUMBER	QTY	BODY	MODEL	DESCRIPTION
	4431 917	AR			.175" Thk.
	4431 918	AR			.193" Thk.
	4431 919	AR			.211" Thk.
31	4461 082	1			SNAP RING, O/Drive Clutch Pressure Plate, Round 7" O.D.
32	4461 048	1			PLATE, O/Drive Clutch Pressure
33	4461 047	2		2WD	PLATE, O/Drive Clutch Separator
	4461 047	3		4WD	
34	4461 181	3		2WD	DISC, O/Drive Clutch ***
	4461 181	4		4WD	
35	4461 033	1			PLATE, O/Drive Clutch Reaction
36	4461 066	1			SPRING, O/Drive Clutch Wave
37	4461 065	1			SNAP RING, O/Drive Clutch Reaction Plate, 6-1/2" O.D.

MODEL CODES:

72=2 DR Wagon
74=4 DR Wagon
77=Open Body 93" Whlbase
78=Open Body 103" Whlbase - Export
T=2WD
J,N=4WD
U=4WD (RHD)

BODY STYLES:

YJ=Wrangler (4X4) "S"
Weangler (4X4) SE
Wrangler (4X4) Sahara
Wrangler (4X4) Renegade

XJ=Cherokee SE
Cherokee Sport
Cherokee Country

ZJ=Grand Cherokee SE
Grand Cherokee Laredo
Grand Cherolee Limited
ZG=Grand Cherokee European

Y1=Wrangler
X1=Cherokee
Z1=Grand Cherokee
KDX=Vehicles

AR = Use as Required - = Non Illustrated Part P.A.R. = Paint as Required

CONTROLS, GEARSHIFT, FLOOR MOUNTED AUTOMATIC TRANSMISSION, 4 SPEED, 44RE GRAND CHEROKEE
Figure 21F-1210

21F-1210

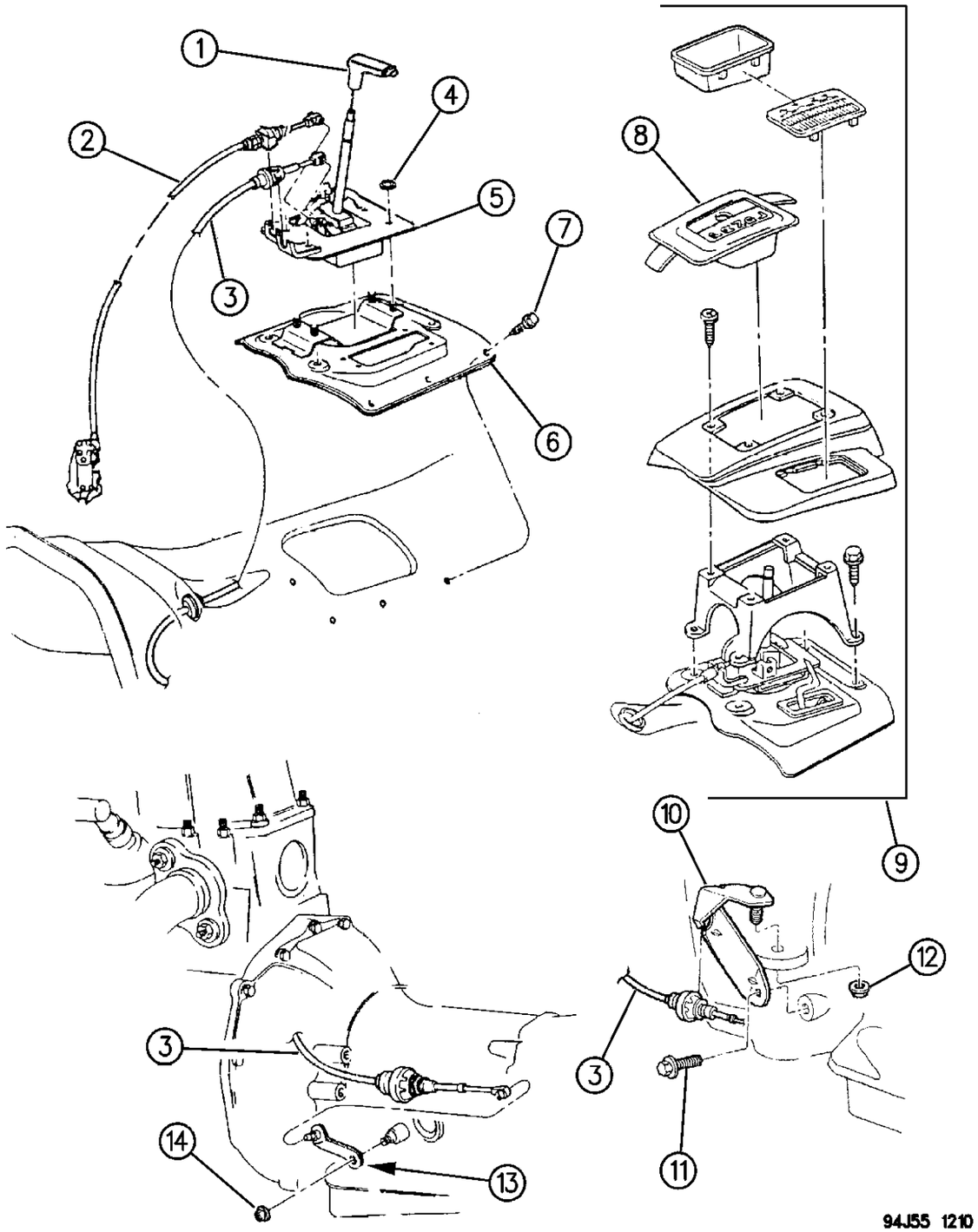

ITEM	PART NUMBER	QTY	BODY	MODEL	DESCRIPTION
1	5300 7750	1			HANDLE, Trans. Gearshift
2	5207 8961	1			CABLE ASSEMBLY, Park Interlock ***
3	5207 9230	1			CABLE ASSEMBLY, Trans. Gearshift ***
	5300 8656	1			GROMMET, Gearshift Cable
4	6101 695	4			NUT, Shifter Hsg. Mounting
5	5207 8384	1			HOUSING and LEVER, Assy., Gearshift ***
	5305 4278	1	ZG		RHD 1996 ***
	5300 3350	1			SPRING, Pawl Return (Not Shown)
6					COVER, Floor Shift Mtg.
	5300 7541	1			4x4
	5300 7349	1			4x2
7		10			SCREW, w/Washer (Not Serviced)
8	5511 5774	1			BEZEL, Floor Console
					1996 w/231 Transfer Case
	5535 6737	1	ZG	RHD	
	5511 5769	1	ZG		
9					CONSOLE, Mini (Reference See Group 23A)
10	5207 8255	1			BRACKET, Shift Cable Mounting
11		1			SCREW, Shift Cable Mtg. Brkt., 5/16-18 x 3/4" (Not Serviced)
12	0152 476	1			NUT, Cable Brkt. Mtg., 7/16-14
13	5207 9168	1			LEVER, Manual Valve Shaft Shift
14	J420 0046	1			NUT, Lever M8x1.25

MODEL CODES:

72=2 DR Wagon
74=4 DR Wagon
77=Open Body 93" Whlbase
78=Open Body 103" Whlbase - Export
T=2WD
J,N=4WD
U=4WD (RHD)

BODY STYLES:

YJ=Wrangler (4X4) "S"
Weangler (4X4) SE
Wrangler (4X4) Sahara
Wrangler (4X4) Renegade
XJ=Cherokee SE
Cherokee Sport
Cherokee Country
ZJ=Grand Cherokee SE
Grand Cherokee Laredo
Grand Cherolee Limited
ZG=Grand Cherokee European
Y1=Wrangler
X1=Cherokee
Z1=Grand Cherokee
KDX=Vehicles

AR = Use as Required - = Non Illustrated Part P.A.R. = Paint as Required

« RETURN TO GROUP INDEX

SAGIPARTS

GROUP-21E
AUTOMATIC TRANSMISSION (AISIN)

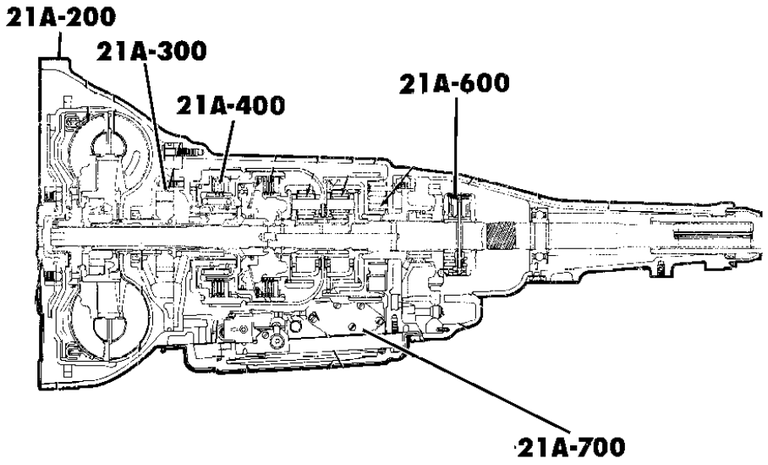

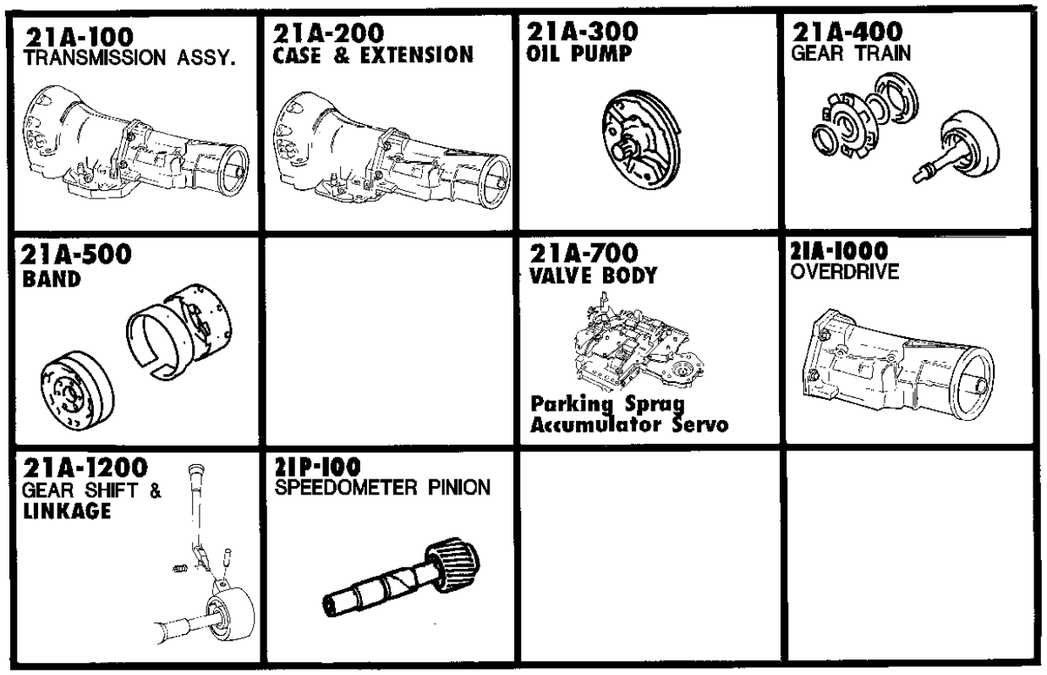

GROUP 21E - TRANS. AUTO AISIN WARNER

ILLUSTRATION TITLE	GROUP-FIG. NO.
TRANSMISSION ASSEMBLY	
TRANSMISSION ASSEMBLY AUTOMATIC TRANSMISSION, 4 SPEED, AW4 CHEROKEE XJ	Fig. 21E-110
CASE AND EXTENSION	
CASE AND RELATED PARTS AUTOMATIC TRANSMISSION, 4 SPEED, AW4 CHEROKEE XJ	Fig. 21E-210
LINKAGE, HARNESS, NEUTRAL SAFETY SWITCH AUTOMATIC TRANSMISSION, 4 SPEED, AW4 CHEROKEE XJ	Fig. 21E-220
OIL PUMP	
PUMP, OIL WITH REACTION SHAFT AUTOMATIC TRANSMISSION, 4 SPEED, AW4 CHEROKEE XJ	Fig. 21E-310
GEAR TRAIN	
OVERDRIVE CLUTCH AUTOMATIC TRANSMISSION, AW4 CHEROKEE XJ	Fig. 21E-410
CLUTCHES, FORWARD AND DIRECT AUTOMATIC TRANSMISSION, 4 SPEED, AW4 CHEROKEE XJ	Fig. 21E-420
BRAKE, CLUTCH AND SUN GEAR AUTOMATIC TRANSMISSION, 4 SPEED, AW4 CHEROKEE XJ	Fig. 21E-430
GEAR TRAIN AND OUTPUT SHAFT AUTOMATIC TRANSMISSION, 4 SPEED, AW4 CHEROKEE XJ	Fig. 21E-440
BAND, BRAKE COAST 2ND AUTOMATIC TRANSMISSION, 4 SPEED, AW4 CHEROKEE XJ	Fig. 21E-510
VALVE BODY, SERVO AND PARKING SPRAG	
VALVE BODY AND ELECTRONIC CONTROL AUTOMATIC TRANSMISSION, 4 SPEED, AW4 CHEROKEE XJ	Fig. 21E-710
ACCUMULATOR PISTON AND SPRINGS AUTOMATIC TRANSMISSION, 4 SPEED, AW4 CHEROKEE XJ	Fig. 21E-720
LOCK, PARKING AUTOMATIC TRANSMISSION, 4 SPEED, AW4 CHEROKEE XJ	Fig. 21E-730
GEARSHIFT CONTROLS	
CONTROLS, GEARSHIFT, FLOOR MOUNTED AUTOMATIC TRANSMISSION, AW4 CHEROKEE XJ	Fig. 21E-1210
CONTROLS, GEARSHIFT, COLUMN MOUNTED AUTOMATIC TRANSMISSION, AW4 CHEROKEE XJ	Fig. 21E-1220

TRANSMISSION ASSEMBLY AUTOMATIC TRANSMISSION, 4 SPEED, AW4 CHEROKEE XJ
Figure 21E-110

21E-110

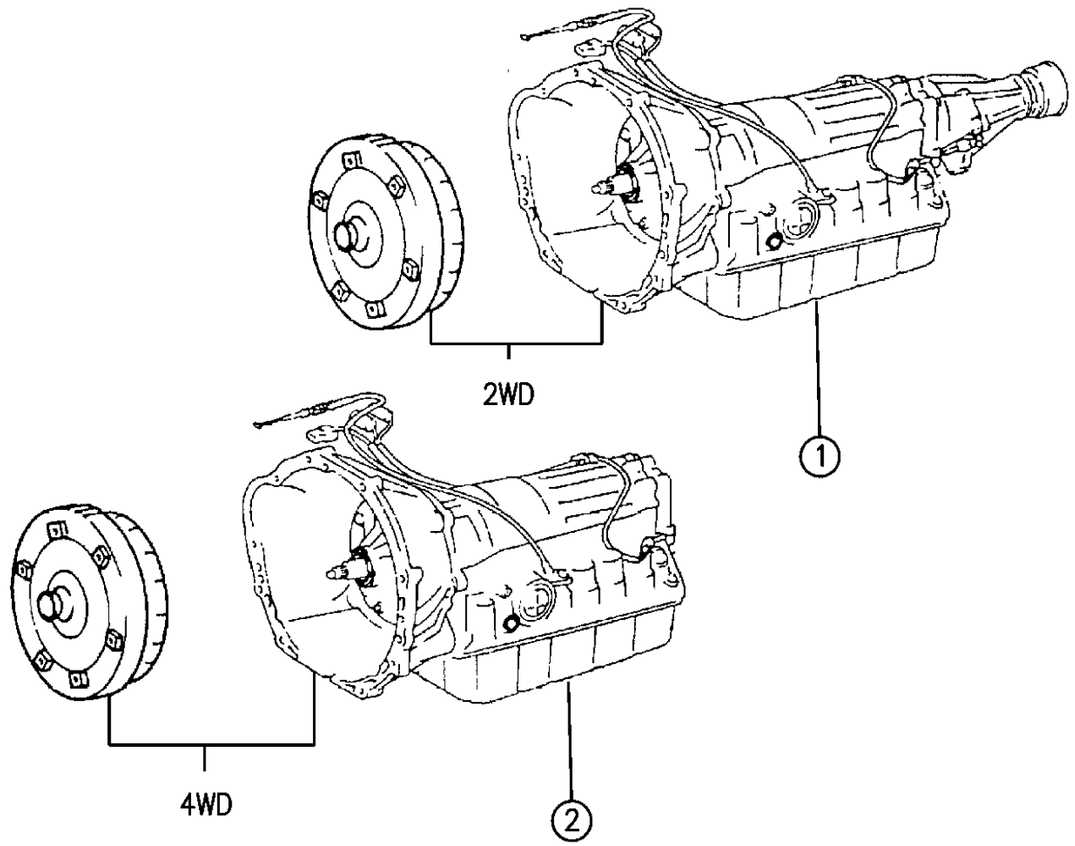

94J53 110

ITEM	PART NUMBER	QTY	BODY	MODEL	DESCRIPTION
1					TRANSMISSION ASSEMBLY, w/Torque Converter, 4 Speed AW4
					***
	5300 7997	1	XJ	2WD	4.0L Eng.
	4810 178	1			
2					TRANSMISSION ASSEMBLY, w/Torque Converter, 4 Speed AW4
					***
	5300 7998	1	XJ	4WD	4.0L Eng.
	4810 179	1			

MODEL CODES:

72=2 DR Wagon
74=4 DR Wagon
77=Open Body 93" Whlbase
78=Open Body 103" Whlbase - Export
T=2WD
J,N=4WD
U=4WD (RHD)

BODY STYLES:

YJ=Wrangler (4X4) "S"
Weangler (4X4) SE
Wrangler (4X4) Sahara
Wrangler (4X4) Renegade
XJ=Cherokee SE
Cherokee Sport
Cherokee Country
ZJ=Grand Cherokee SE
Grand Cherokee Laredo
Grand Cherolee Limited
ZG=Grand Cherokee European
Y1=Wrangler
X1=Cherokee
Z1=Grand Cherokee
KDX=Vehicles

AR = Use as Required - = Non Illustrated Part P.A.R. = Paint as Required

CASE AND RELATED PARTS AUTOMATIC TRANSMISSION, 4 SPEED, AW4 CHEROKEE XJ
Figure 21E-210

21E-210

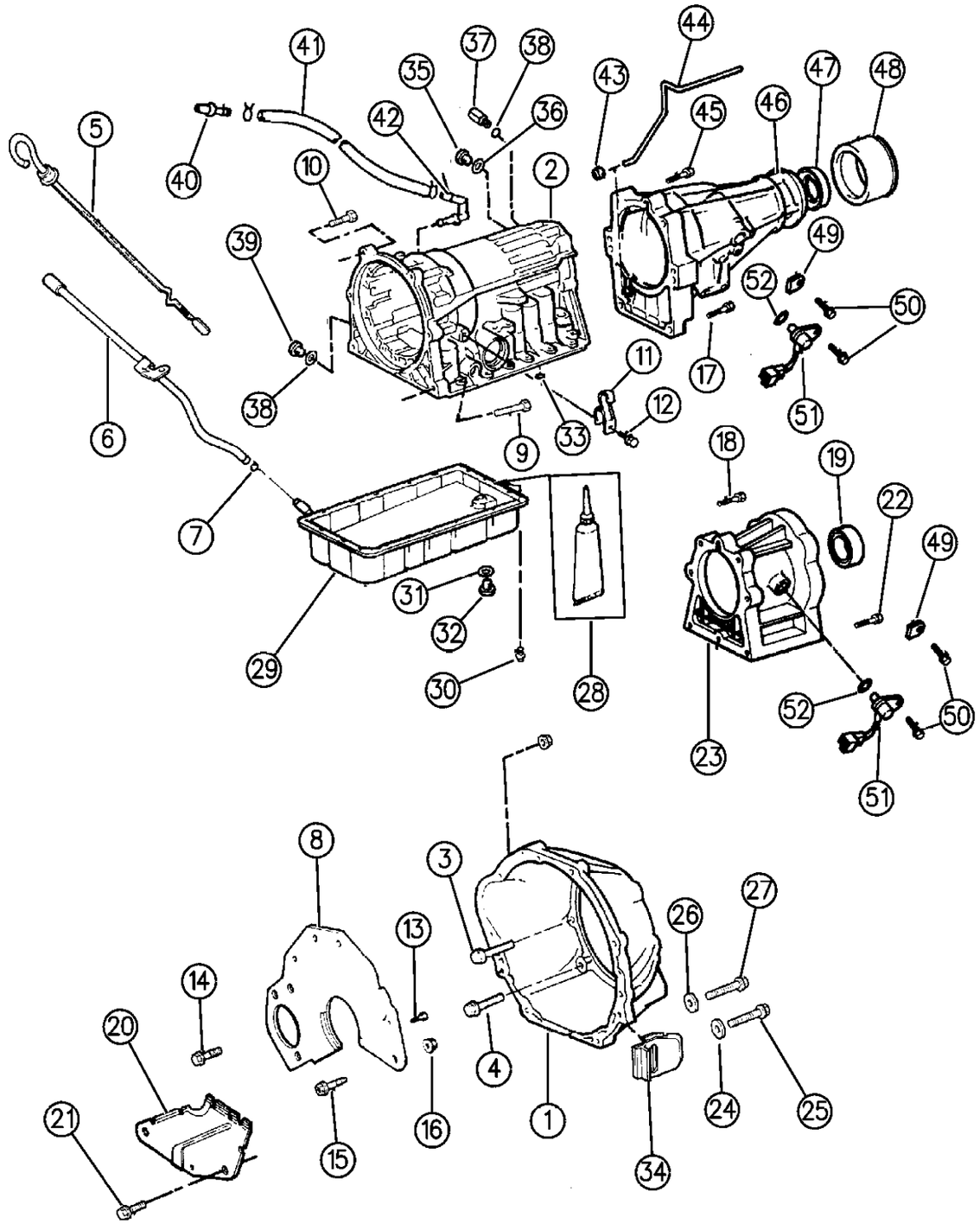

ITEM	PART NUMBER	QTY	BODY	MODEL	DESCRIPTION
1	8350 4062	1			HOUSING, Torque converter
2	8350 3745	1			CASE, Transmission
3	8350 3747	4			BOLT, w/Washer, M10x1.5x35mm
4	8350 4057	2			BOLT, w/Washer, M10x1.5x100mm
5	5211 8079	1			INDICATOR, Oil Level ***
	5211 8633	1			1996 ***
6	5300 2870	1			TUBE, Oil Indicator
7	5300 3977	1			SEAL, O-Ring
8	5300 4907	1			SPACER
9	8350 3746	2			BOLT, w/Washer, M12x1.75x45mm
10	8350 3747	3			BOLT, w/Washer, M10x1.5x35mm
11	8350 3715	1			CLAMP
12	8350 3716	1			BOLT, w/Washer, M6x1x12mm
13		1			BOLT, 3/8-16 x 5/8" (Not Required)
14	1150 2850	3			BOLT, M8x1.25x20mm
15	1150 4922	2			BOLT, M12x1.75x50mm
16	1150 2723	2			NUT, M12x1.75mm
17	8350 3747	3			BOLT, M10x1.5x35mm
18	4637 495	5			BOLT, w/Washer, M10x1.5x40mm, 4WD
19	8350 4055	1			SEAL, Oil Lip, Adapter, 4WD
20	5211 8078	1			COVER, Torque Converter
21	1150 2628	3			BOLT, M8x1.25x30mm
22	4637 494	2			BOLT, 4WD
23	8350 4056	1			ADAPTER, Trans. Case, 4WD
24	S044 6363	2			WASHER, 3/8IDx7/8ODx.078
25	J018 0129	2			BOLT, 3/8-16x1.875
26	J400 5397	2			WASHER, 7/16IDx.875ODx.135
27	J942 7626	2			BOLT, 7/16-14x3-1/8"
28	4318 025	1			SEALER, RTV ***
29	8350 4037	1			PAN, Trans. Oil
30	4637 548	19			BOLT
31	8350 4040	1			GASKET
32	8350 4041	1			PLUG, Drain
33	5252 444	1			GASKET
34	5211 7660	1			GROMMET
35	8350 3749	2			PLUG
36	8350 3750	2			O-RING
37	8350 3728	2			UNION
38	8350 3727	2			O-RING
39	8350 3726	1			PLUG
40					BREATHER ***
	8350 3729	1			2WD

MODEL CODES:

72=2 DR Wagon
74=4 DR Wagon
77=Open Body 93" Whlbase
78=Open Body 103" Whlbase - Export
T=2WD
J,N=4WD
U=4WD (RHD)

BODY STYLES:

YJ=Wrangler (4X4) "S"
Weangler (4X4) SE
Wrangler (4X4) Sahara
Wrangler (4X4) Renegade
XJ=Cherokee SE
Cherokee Sport
Cherokee Country
ZJ=Grand Cherokee SE
Grand Cherokee Laredo
Grand Cherolee Limited
ZG=Grand Cherokee European
Y1=Wrangler
X1=Cherokee
Z1=Grand Cherokee
KDX=Vehicles

AR = Use as Required - = Non Illustrated Part P.A.R. = Paint as Required

CASE AND RELATED PARTS AUTOMATIC TRANSMISSION, 4 SPEED, AW4 CHEROKEE XJ
Figure 21E-210

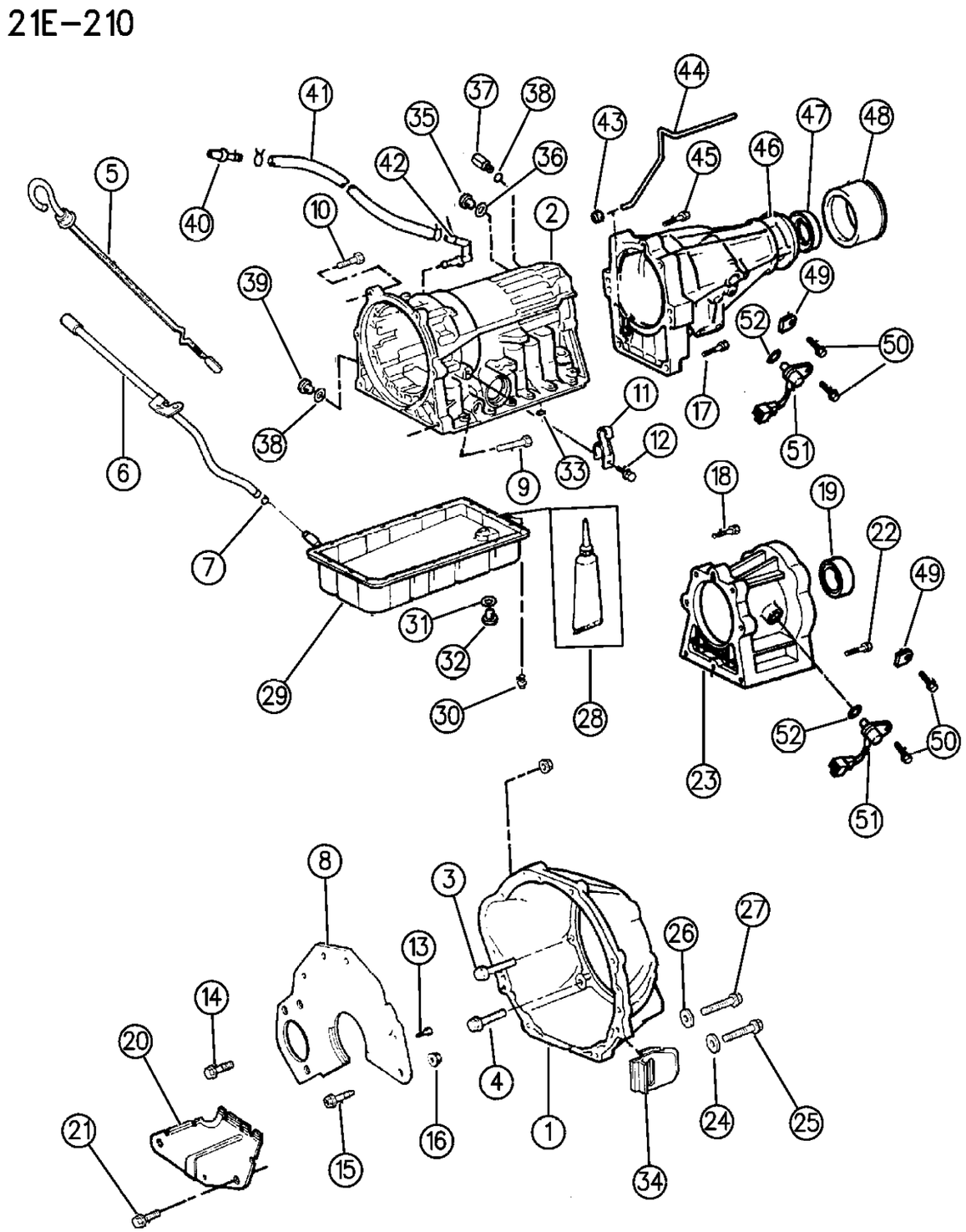

ITEM	PART NUMBER	QTY	BODY	MODEL	DESCRIPTION
	8350 3737	1			4WD
41	8350 3720	1			HOSE
42	8350 3738	1			ADAPTER
43	8350 4052	1			GASKET, Housing Tube, 2WD
44	8350 4053	1			TUBE, Housing Extension, 2WD
45	4637 493	4			BOLT, M10x1.5mm, 2WD
46	8350 4046	1			EXTENSION, Case, 2WD
47	8350 4048	1			SEAL, Oil Lip, Extension, 2WD
48	8350 4050	1			DEFLECTOR, Dust, 2WD ***
49	8350 3721	1			PLATE
50	3420 1808	2			BOLT, M6x1x16mm
51	8350 3722	1			SENSOR, Speed
52	8350 3723	1			O-RING

MODEL CODES:

72=2 DR Wagon
74=4 DR Wagon
77=Open Body 93" Whlbase
78=Open Body 103" Whlbase - Export
T=2WD
J,N=4WD
U=4WD (RHD)

BODY STYLES:

YJ=Wrangler (4X4) "S"
Weangler (4X4) SE
Wrangler (4X4) Sahara
Wrangler (4X4) Renegade

XJ=Cherokee SE
Cherokee Sport
Cherokee Country

ZJ=Grand Cherokee SE
Grand Cherokee Laredo
Grand Cherolee Limited
ZG=Grand Cherokee European

Y1=Wrangler
X1=Cherokee
Z1=Grand Cherokee
KDX=Vehicles

AR = Use as Required - = Non Illustrated Part P.A.R. = Paint as Required

LINKAGE, HARNESS, NEUTRAL SAFETY SWITCH AUTOMATIC TRANSMISSION, 4 SPEED, AW4 CHEROKEE XJ
Figure 21E-220

21E-220

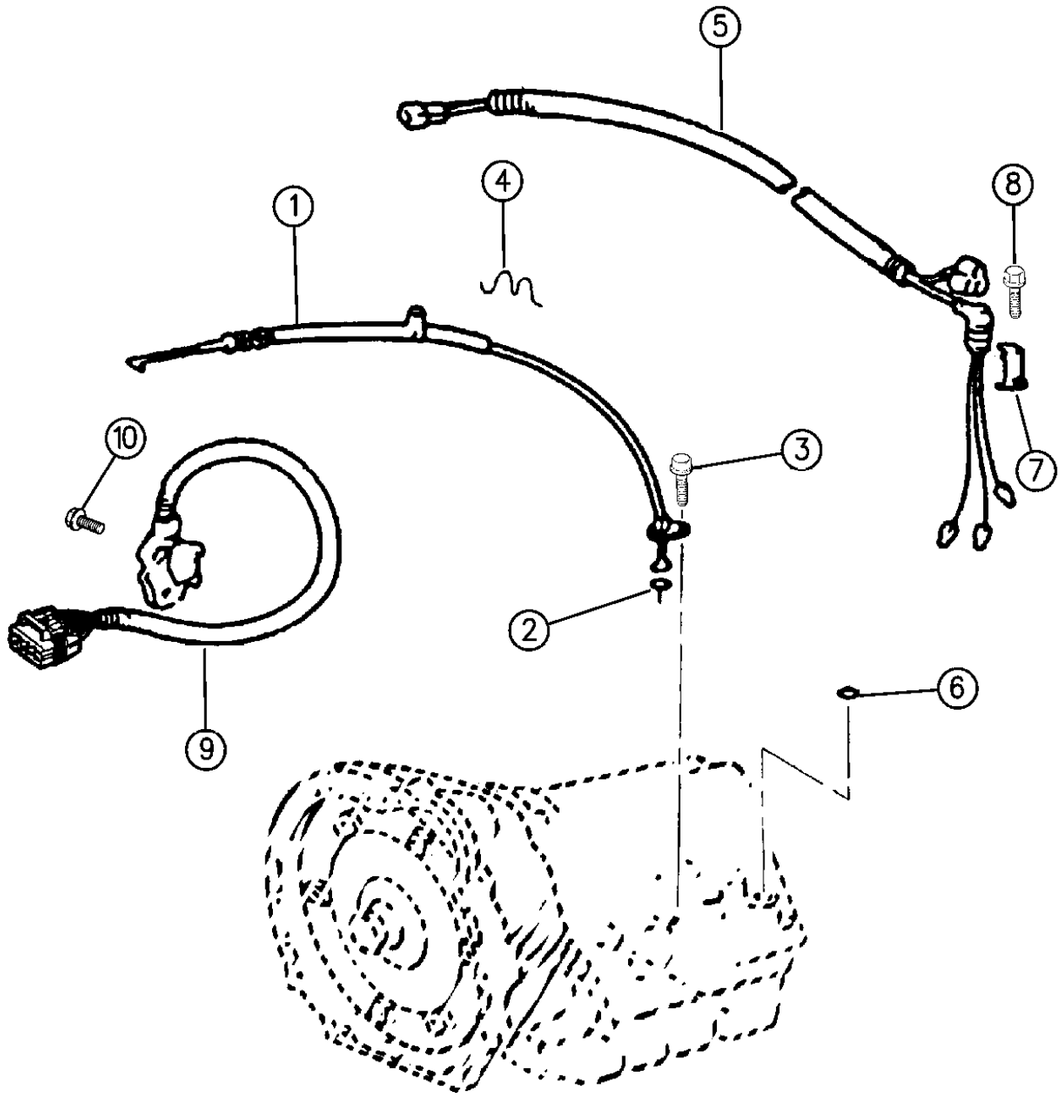

ITEM	PART NUMBER	QTY	BODY	MODEL	DESCRIPTION
1	5207 7578	1			CABLE, Throttle Control
2	8350 3708	1			O-RING, Cable Seal
3	3420 1808	1			BOLT, Cable
4	8350 3710	1			CLAMP, Cable Retention
5					HARNESS, Trans. Solenoids and Module
	8350 3718	1			2WD
	8350 3843	1			4WD
6	8350 3719	1			O-RING
7	8350 3717	1			PLATE, Lock
8	8350 3716	1			BOLT, w/Washer, M6x1.0x12mm
9	8350 3712	1			SWITCH, Neutral Starter and Back-Up Light Safety
10	8350 3714	1			BOLT, M8x1.25x30mm

MODEL CODES:

72=2 DR Wagon
74=4 DR Wagon
77=Open Body 93" Whlbase
78=Open Body 103" Whlbase - Export
T=2WD
J,N=4WD
U=4WD (RHD)

BODY STYLES:

YJ=Wrangler (4X4) "S"
Weangler (4X4) SE
Wrangler (4X4) Sahara
Wrangler (4X4) Renegade

XJ=Cherokee SE
Cherokee Sport
Cherokee Country

ZJ=Grand Cherokee SE
Grand Cherokee Laredo
Grand Cherolee Limited
ZG=Grand Cherokee European

Y1=Wrangler
X1=Cherokee
Z1=Grand Cherokee
KDX=Vehicles

AR = Use as Required - = Non Illustrated Part P.A.R. = Paint as Required

« RETURN TO GROUP INDEX

PUMP, OIL WITH REACTION SHAFT AUTOMATIC TRANSMISSION, 4 SPEED, AW4 CHEROKEE XJ
Figure 21E-310

21E-310

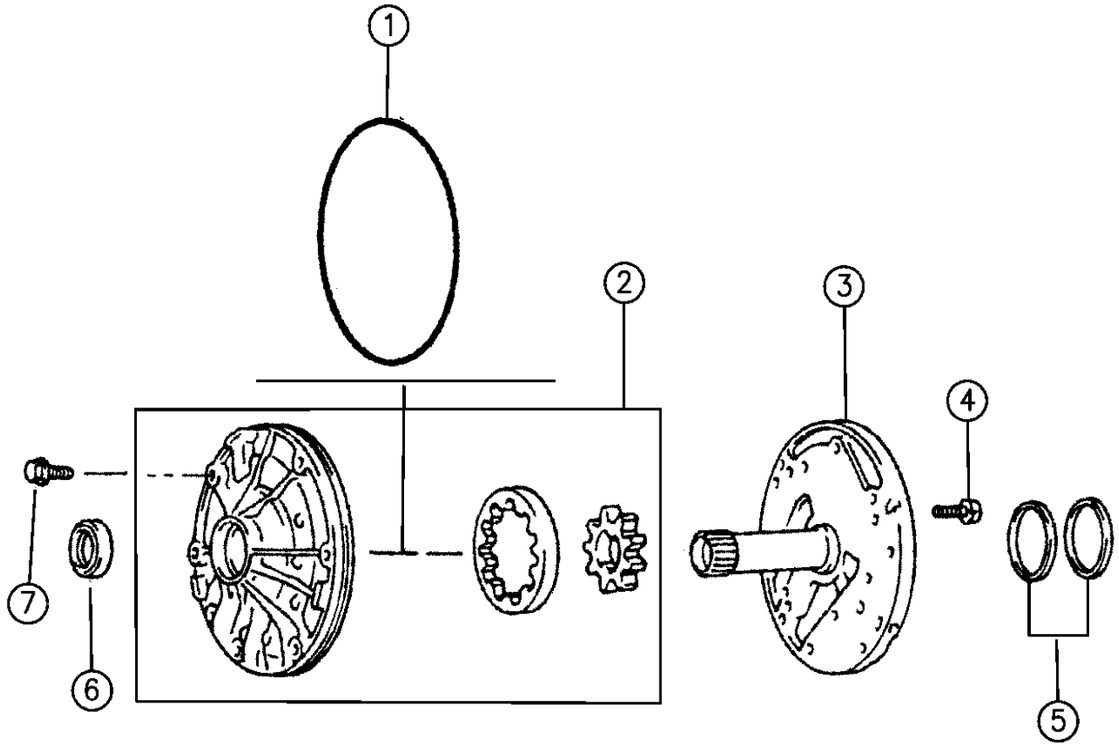

94J53 310

ITEM	PART NUMBER	QTY	BODY	MODEL	DESCRIPTION
1	8350 3758	1			O-RING ***
2	8350 4283	1			PUMP ASSEMBLY ***
3	4626 166	1			STATOR ***
4	4626 167	13			BOLT, Flange, M6x1.0x16mm
5	8350 3757	2			OIL SEAL ***
6	8350 3752	1			OIL SEAL ***
7	8350 3759	7			BOLT, w/Washer, M8x1.25x35mm

MODEL CODES:

72=2 DR Wagon
74=4 DR Wagon
77=Open Body 93" Whlbase
78=Open Body 103" Whlbase - Export
T=2WD
J,N=4WD
U=4WD (RHD)

BODY STYLES:

YJ=Wrangler (4X4) "S"
Weangler (4X4) SE
Wrangler (4X4) Sahara
Wrangler (4X4) Renegade
XJ=Cherokee SE
Cherokee Sport
Cherokee Country
ZJ=Grand Cherokee SE
Grand Cherokee Laredo
Grand Cherolee Limited
ZG=Grand Cherokee European
Y1=Wrangler
X1=Cherokee
Z1=Grand Cherokee
KDX=Vehicles

AR = Use as Required - = Non Illustrated Part P.A.R. = Paint as Required

OVERDRIVE CLUTCH AUTOMATIC TRANSMISSION, AW4 CHEROKEE XJ
Figure 21E-410

21E-410A

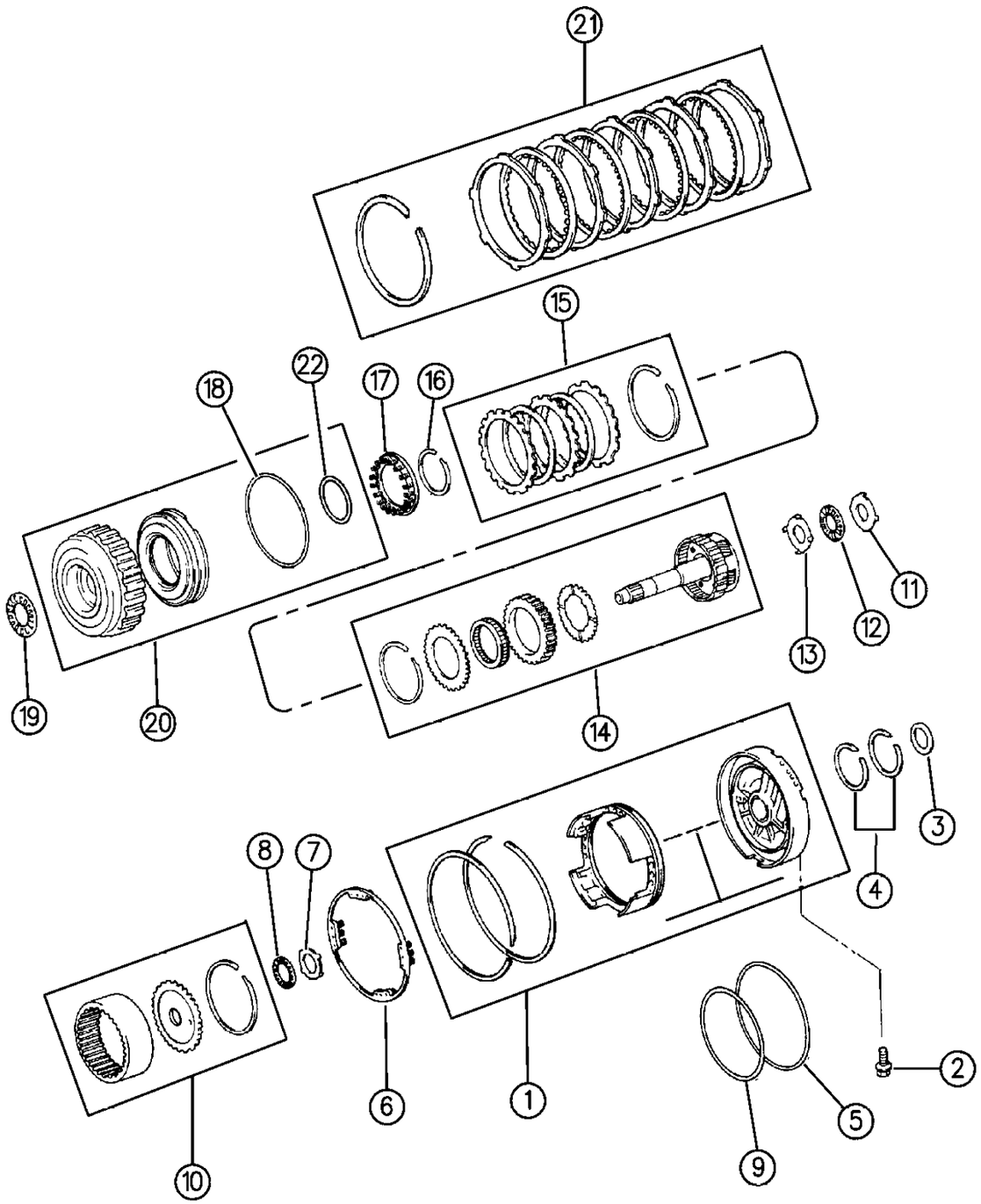

ITEM	PART NUMBER	QTY	BODY	MODEL	DESCRIPTION
1	4636 977	1			REPAIR PACKAGE, Overdrive Support ***
2	8350 3898	2			BOLT, Flange, M8x1.25x45mm
3	8350 3784	1			RACE, Bearing
4	8350 3757	2			RING
5	4636 782	1			O-RING, O/Drive Support, Outer
6	4636 784	1			SPRING, O/Drive Brake Return
7		1			RACE, Bearing (Serviced in 4637023 Repair Pkg.)
8		1			BEARING, (Serviced in 4637023 Repair Pkg.)
9	4636 783	1			O-RING, O/Drive Support, Inner ***
10	4636 978	1			REPAIR PACKAGE ***
11	8350 3916	1			RACE, Bearing
12	8350 3802	1			BEARING
13	8350 3915	1			RACE, Bearing
14	4637 024	1			REPAIR PACKAGE, Planetary Gear ***
15	8350 4287	1			REPAIR PACKAGE, Direct Clutch
16	8350 3810	1			RING
17	8350 3928	1			SPRING
18	8350 3926	1			O-RING
19	8350 3939	1			BEARING ASSEMBLY ***
20	4637 025	1			CLUTCH ASSEMBLY, Overdrive
21	8350 4294	1			PLATE SET, Overdrive Clutch ***
22	8350 3811	1			O-RING ***

MODEL CODES:

72=2 DR Wagon
74=4 DR Wagon
77=Open Body 93" Whlbase
78=Open Body 103" Whlbase - Export
T=2WD
J,N=4WD
U=4WD (RHD)

BODY STYLES:

YJ=Wrangler (4X4) "S"
Weangler (4X4) SE
Wrangler (4X4) Sahara
Wrangler (4X4) Renegade
XJ=Cherokee SE
Cherokee Sport
Cherokee Country
ZJ=Grand Cherokee SE
Grand Cherokee Laredo
Grand Cherolee Limited
ZG=Grand Cherokee European
Y1=Wrangler
X1=Cherokee
Z1=Grand Cherokee
KDX=Vehicles

AR = Use as Required - = Non Illustrated Part P.A.R. = Paint as Required

« RETURN TO GROUP INDEX

CLUTCHES, FORWARD AND DIRECT AUTOMATIC TRANSMISSION, 4 SPEED, AW4 CHEROKEE XJ
Figure 21E-420

21E-420

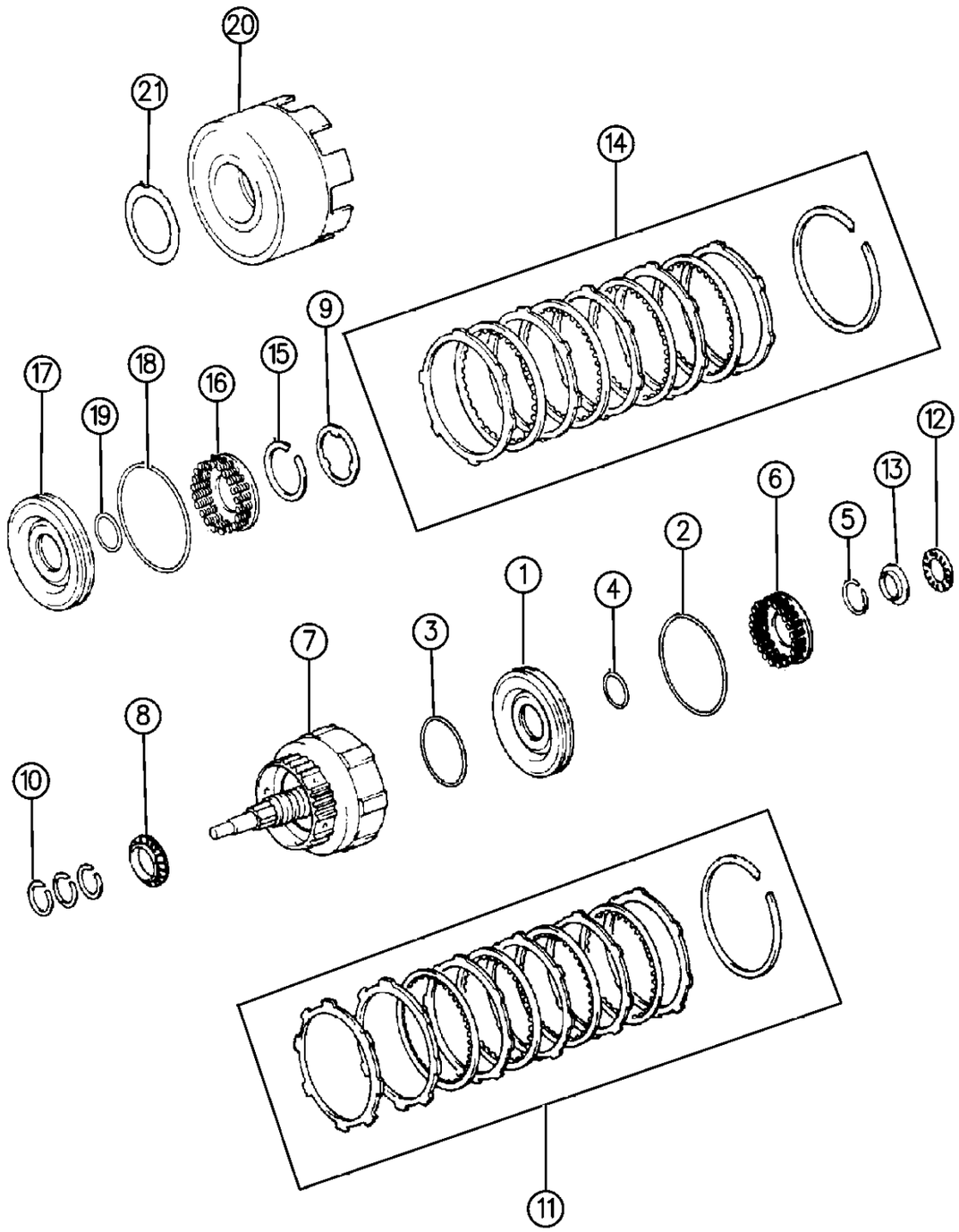

ITEM	PART NUMBER	QTY	BODY	MODEL	DESCRIPTION
1	4636 683	1			PISTON, Front Clutch
2	4637 006	1			O-RING
3	4626 170	1			O-RING
4	4626 176	1			O-RING
5	8350 3792	1			SNAP RING
6	8350 3793	1			SPRING
7	4626 169	1			SHAFT, Input
8	8350 3785	1			BEARING, Clutch
9	8350 3825	1			WASHER, Thrust
10	8350 3799	3			SEAL RING
11	4637 022	1			REPAIR PACKAGE, Forward Clutch ***
12	8350 3802	1			BEARING
13	8350 3800	1			RACE
14	8350 4298	1			REPAIR PACKAGE, Direct Clutch ***
15	8350 3810	1			SNAP RING
16	8350 3813	1			SPRING ASSEMBLY ***
17	8350 3812	1			PISTON ASSEMBLY
18	4637 006	1			O-RING
19	8350 3811	1			O-RING
20	8350 3826	1			DRUM ASSEMBLY ***
21	8350 3808	1			WASHER (DNS)

MODEL CODES:

72=2 DR Wagon
74=4 DR Wagon
77=Open Body 93" Whlbase
78=Open Body 103" Whlbase - Export
T=2WD
J,N=4WD
U=4WD (RHD)

BODY STYLES:

YJ=Wrangler (4X4) "S"
Weangler (4X4) SE
Wrangler (4X4) Sahara
Wrangler (4X4) Renegade
XJ=Cherokee SE
Cherokee Sport
Cherokee Country
ZJ=Grand Cherokee SE
Grand Cherokee Laredo
Grand Cherolee Limited
ZG=Grand Cherokee European
Y1=Wrangler
X1=Cherokee
Z1=Grand Cherokee
KDX=Vehicles

AR = Use as Required - = Non Illustrated Part P.A.R. = Paint as Required

« RETURN TO GROUP INDEX

BRAKE, CLUTCH AND SUN GEAR AUTOMATIC TRANSMISSION, 4 SPEED, AW4 CHEROKEE XJ
Figure 21E-430

21E-430

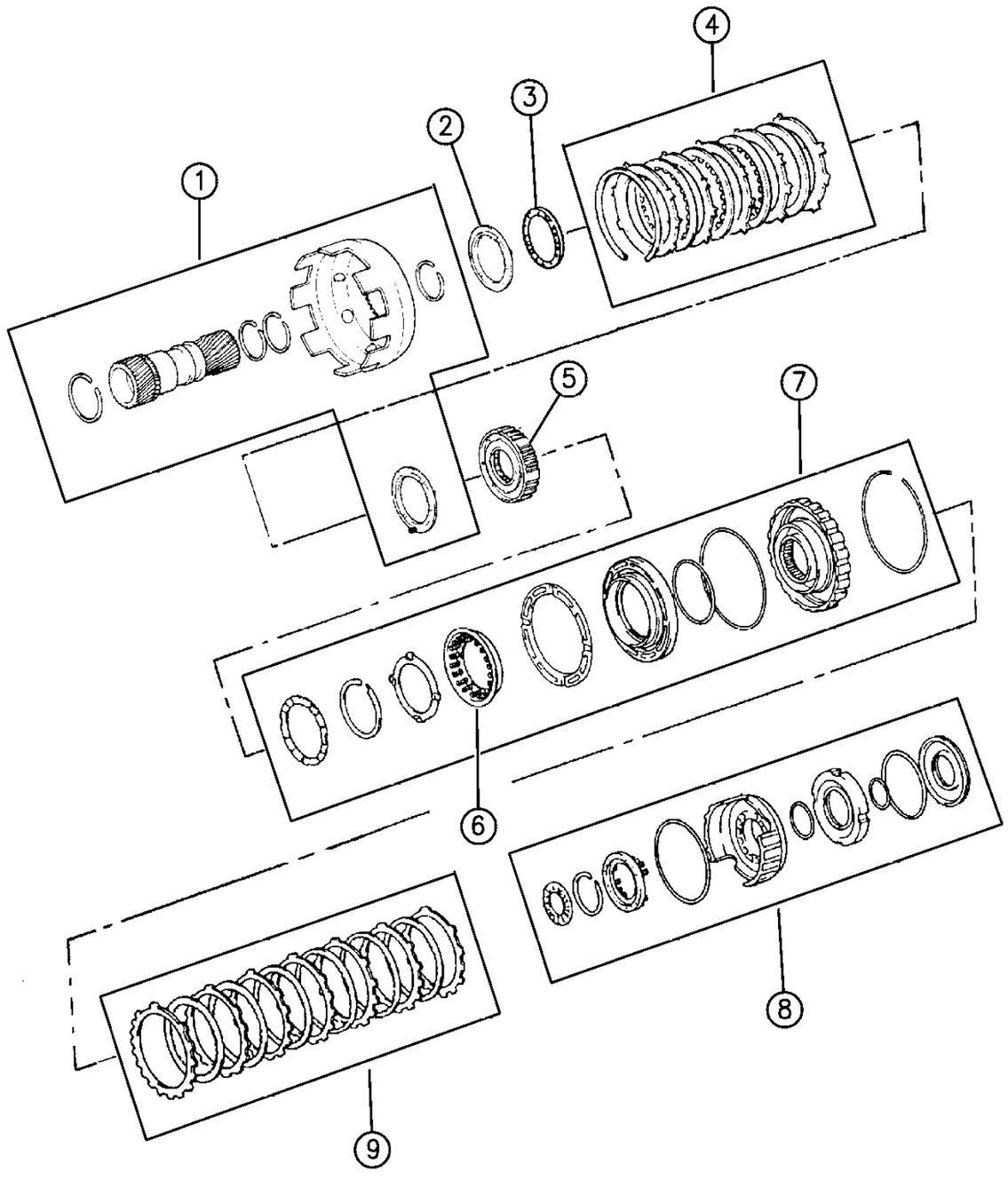

ITEM	PART NUMBER	QTY	BODY	MODEL	DESCRIPTION
1	4637 035	1			REPAIR PACKAGE, Sun Gear ***
2	8350 3886	1			RACE, Bearing
3	8350 3885	1			BEARING, Thrust Roller
4	8350 4319	1			REPAIR PACKAGE, 2nd Brake Clutch ***
5	4637 008	1			CLUTCH, One Way ***
6	8350 3837	1			SPRING ASSEMBLY ***
7	4636 979	1			REPAIR PACKAGE, 2nd Brake Piston ***
8	4637 032	1			REPAIR PACKAGE, 1st And Reverse ***
9	4637 034	1			REPAIR PACKAGE, Disc And Plate ***

MODEL CODES:

72=2 DR Wagon
74=4 DR Wagon
77=Open Body 93" Whlbase
78=Open Body 103" Whlbase - Export
T=2WD
J,N=4WD
U=4WD (RHD)

BODY STYLES:

YJ=Wrangler (4X4) "S"
Weangler (4X4) SE
Wrangler (4X4) Sahara
Wrangler (4X4) Renegade
XJ=Cherokee SE
Cherokee Sport
Cherokee Country
ZJ=Grand Cherokee SE
Grand Cherokee Laredo
Grand Cherolee Limited
ZG=Grand Cherokee European
Y1=Wrangler
X1=Cherokee
Z1=Grand Cherokee
KDX=Vehicles

AR = Use as Required - = Non Illustrated Part P.A.R. = Paint as Required

« RETURN TO GROUP INDEX

GEAR TRAIN AND OUTPUT SHAFT AUTOMATIC TRANSMISSION, 4 SPEED, AW4 CHEROKEE XJ
Figure 21E-440

21E-440

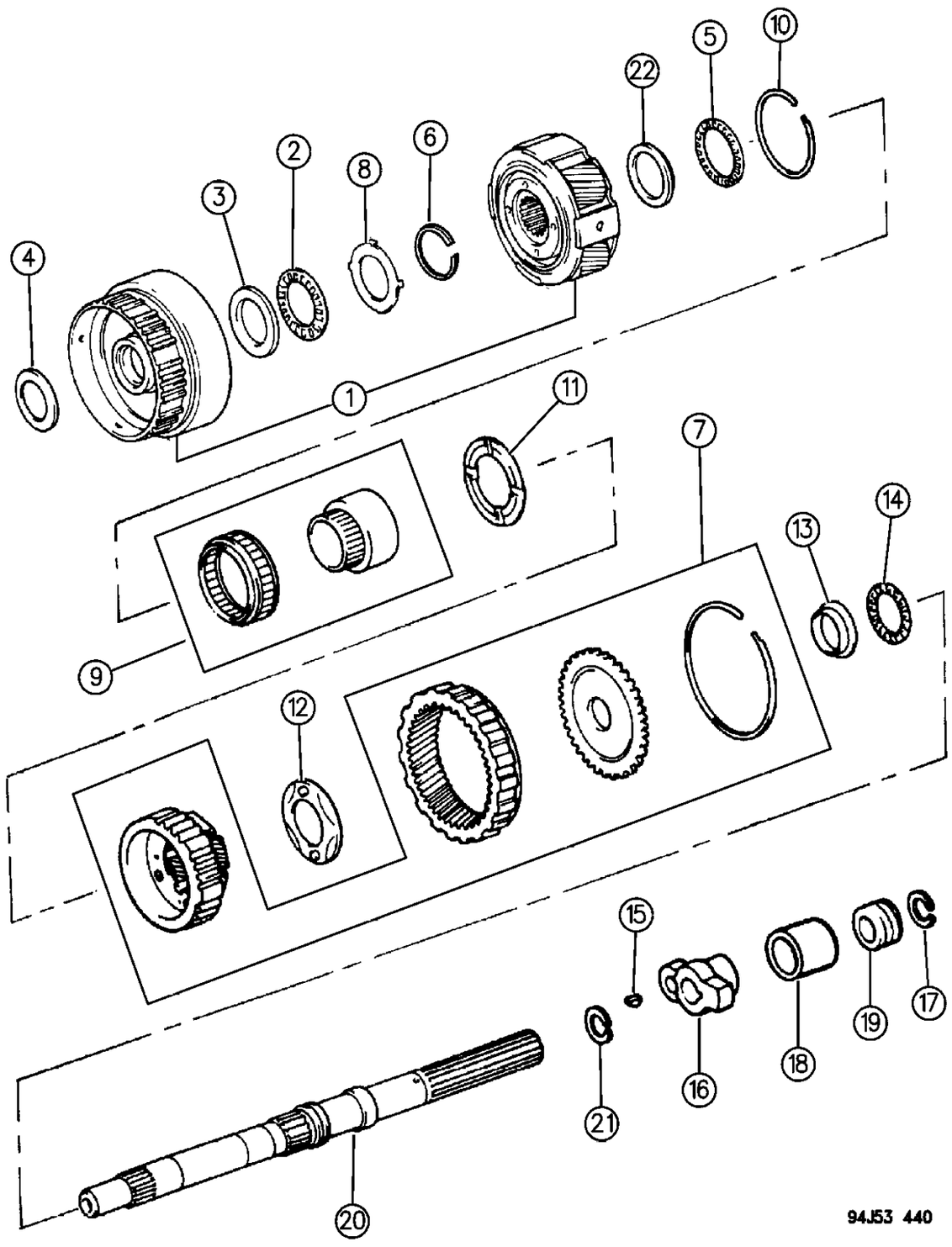

ITEM	PART NUMBER	QTY	BODY	MODEL	DESCRIPTION
1	8350 4326	1			GEAR, Front Planetary
2	8350 3874	1			BEARING
3	8350 3872	1			RACE, Thrust Bearing, Front
4	8350 3801	1			RACE
5	8350 3878	1			BEARING
6	8350 3879	1			SNAP RING
7	4637 037	1			GEAR, Rear Planetary ***
8	8350 3873	1			RACE, Thrust Bearing w/4 Tabs ***
9	4637 036	1			CLUTCH, One Way No. 2
10	8350 3890	1			SNAP RING
11	8350 3891	1			WASHER
12	8350 3893	1			WASHER
13	8350 3887	1			RACE
14	8350 3897	1			BEARING
15	8350 3947	1			KEY, Sensor
16	8350 3946	1			ROTOR, Sensor
17					SEAL RING
	8350 3945	1			2WD
	8350 3943	1			4WD
18	8350 3705	1			SPACER, 2WD
19	8350 3704	1			GEAR, Speedometer Drive, 2WD
20		1			SHAFT, Output
	8350 3944	1			2WD
	4636 789	1			4WD
21	8350 5652	1			SEAL, Oil Ring
22	8350 3877	1			RACE, Thrust Bearing, Rear

MODEL CODES:

72=2 DR Wagon
74=4 DR Wagon
77=Open Body 93" Whlbase
78=Open Body 103" Whlbase - Export
T=2WD
J,N=4WD
U=4WD (RHD)

BODY STYLES:

YJ=Wrangler (4X4) "S"
Weangler (4X4) SE
Wrangler (4X4) Sahara
Wrangler (4X4) Renegade
XJ=Cherokee SE
Cherokee Sport
Cherokee Country
ZJ=Grand Cherokee SE
Grand Cherokee Laredo
Grand Cherolee Limited
ZG=Grand Cherokee European
Y1=Wrangler
X1=Cherokee
Z1=Grand Cherokee
KDX=Vehicles

AR = Use as Required - = Non Illustrated Part P.A.R. = Paint as Required

« RETURN TO GROUP INDEX

BAND, BRAKE COAST 2ND AUTOMATIC TRANSMISSION, 4 SPEED, AW4 CHEROKEE XJ
Figure 21E-510

21E-510

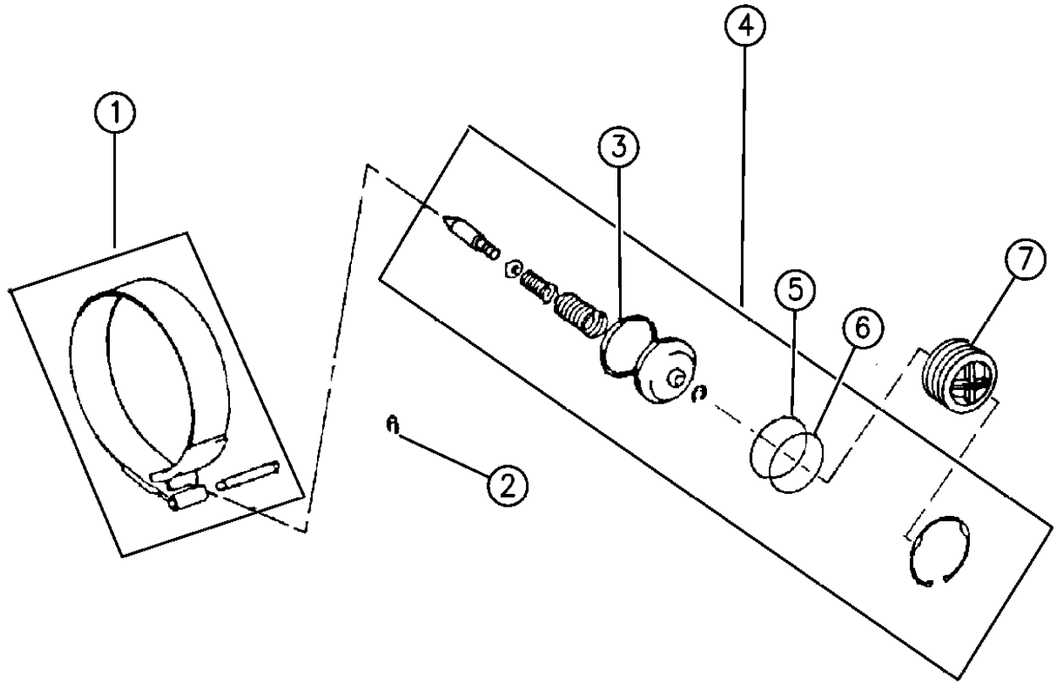

ITEM	PART NUMBER	QTY	BODY	MODEL	DESCRIPTION
1	8350 4311	1			REPAIR PACKAGE, 2nd Band ***
2		1			E-RING, Pin Retaining (Serviced in Pkg. Item No. 1,4)
3	8350 3849	1			SEAL
4	8350 4299	1			BRAKE ASSEMBLY, 2nd Coast ***
5	8350 3855	1			O-RING, Cover ***
6	8350 3855	1			O-RING, Cover ***
7	8350 3853	1			COVER, 2nd Coast Brake

MODEL CODES:

72=2 DR Wagon
74=4 DR Wagon
77=Open Body 93" Whlbase
78=Open Body 103" Whlbase - Export
T=2WD
J,N=4WD
U=4WD (RHD)

BODY STYLES:

YJ=Wrangler (4X4) "S"
Weangler (4X4) SE
Wrangler (4X4) Sahara
Wrangler (4X4) Renegade
XJ=Cherokee SE
Cherokee Sport
Cherokee Country
ZJ=Grand Cherokee SE
Grand Cherokee Laredo
Grand Cherolee Limited
ZG=Grand Cherokee European
Y1=Wrangler
X1=Cherokee
Z1=Grand Cherokee
KDX=Vehicles

AR = Use as Required - = Non Illustrated Part P.A.R. = Paint as Required

« RETURN TO GROUP INDEX

VALVE BODY AND ELECTRONIC CONTROL AUTOMATIC TRANSMISSION, 4 SPEED, AW4 CHEROKEE XJ
Figure 21E-710

21E-710

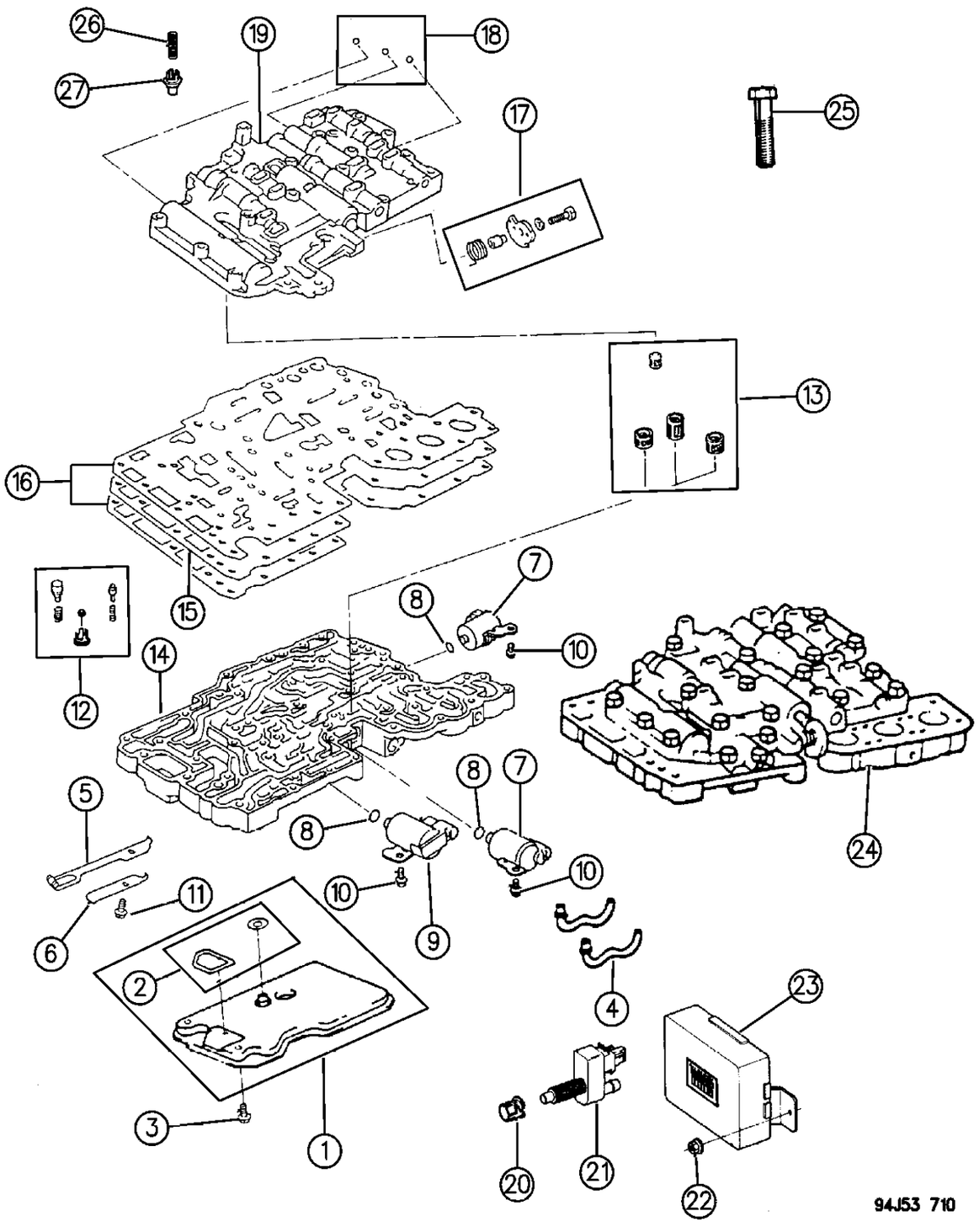

ITEM	PART NUMBER	QTY	BODY	MODEL	DESCRIPTION
1	8350 4032	1			FILTER ASSEMBLY ***
2	8350 4333	1			GASKET PACKAGE, Oil Filter
3	8350 4031	4			BOLT, Flange, M6x1.0x12mm
4	8350 4334	2			TUBE
5	8350 4016	1			SPRING, Manual Detent
6	8350 4015	1			COVER, Detent
7					SOLENOID, 1st & 2nd ***
	8350 4043	2			w/53007997 94
	4797 402	2			w/4810178,4810179 95-96
8	8350 4065	3			O-RING
9					SOLENOID, 3rd Speed ***
	8350 4044	1			w/53007997 94
	4797 403	1			w/4810178,4810179 95-96
10	8350 4031	3			BOLT, Flange Head, M6x1.0x12mm
11	8350 4014	1			BOLT, Flange, M6x1.0x16mm
12	8350 4335	1			VALVE PACKAGE, Check & Pressure Relief ***
13	8350 4336	1			STRAINER PACKAGE
14	8350 4356	1			BODY, Lower Valve
15	4637 468	1			PLATE
16	8350 4337	1			GASKET PACKAGE ***
17	4637 026	1			CAM PACKAGE, Throttle Valve
18	4637 031	1			BALL PACKAGE, Check (Qty.3) ***
19		1			BODY, Upper Valve (Serviced in Assy. Item No. 24) ***
20	J400 6789	1			NUT
21		1			SWITCH, Trans. Converter Cut-Out (Not Required)
22	1150 2702	2			NUT, M5x0.8
23	5602 6769	1			MODULE, Transmission, Except EUROPEAN
	5300 8383	1			w/EUROPEAN
24	4626 168	1			VALVE ASSEMBLY, Rol Valve w/Solenoid
	4797 404	1			w/4810178,4810179
25					BOLT
	8350 4031	6			M6x1.0x12mm
	8350 4014	1			M6x1.0x16mm
	8350 4011	9			M5x0.8x20mm
	8350 4133	5			M6x1.0x23mm
	8350 4012	3			M5x0.8x28mm
	8350 4134	12			M6x1.0x32mm
	8350 4013	13			M5x0.8x38mm
26	8350 4036	1			SPRING
27	8350 4042	1			BODY, Check Ball

MODEL CODES:

72=2 DR Wagon
74=4 DR Wagon
77=Open Body 93" Whlbase
78=Open Body 103" Whlbase - Export
T=2WD
J,N=4WD
U=4WD (RHD)

BODY STYLES:

YJ=Wrangler (4X4) "S"
Weangler (4X4) SE
Wrangler (4X4) Sahara
Wrangler (4X4) Renegade
XJ=Cherokee SE
Cherokee Sport
Cherokee Country
ZJ=Grand Cherokee SE
Grand Cherokee Laredo
Grand Cherolee Limited
ZG=Grand Cherokee European
Y1=Wrangler
X1=Cherokee
Z1=Grand Cherokee
KDX=Vehicles

AR = Use as Required - = Non Illustrated Part P.A.R. = Paint as Required

« RETURN TO GROUP INDEX

ACCUMULATOR PISTON AND SPRINGS AUTOMATIC TRANSMISSION, 4 SPEED, AW4 CHEROKEE XJ
Figure 21E-720

21E-720A

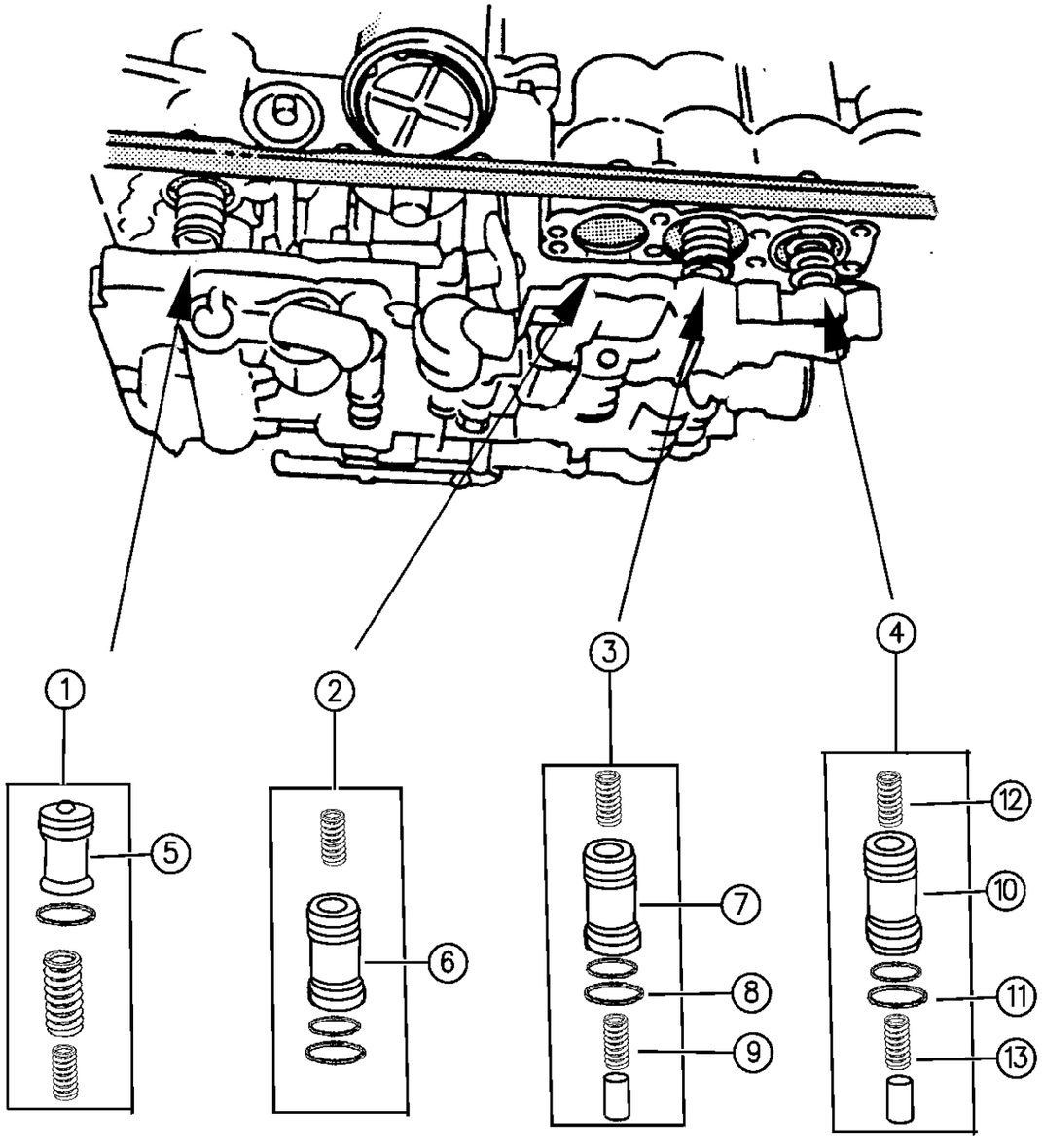

ITEM	PART NUMBER	QTY	BODY	MODEL	DESCRIPTION
					ACCUMULATOR PACKAGE ***
1	8350 4343	1			OVERDRIVE CLUTCH ***
2	4637 028	1			OVERDRIVE BRAKE ***
3	4637 029	1			DIRECT CLUTCH ***
4	4637 030	1			SECOND BRAKE ***
5	8350 4017	1			PISTON ***
6	4636 788	1			PISTON ***
7	4636 786	1			PISTON ***
8	8350 4029	1			O-RING ***
9	4883 936AA	1			SPRING
10	4636 787	1			PISTON ***
11	8350 4029	1			O-RING ***
12	4883 937AA	1			SPRING, Compression
13	4883 938AA	1			SPRING, Accumulator

MODEL CODES:

72=2 DR Wagon
74=4 DR Wagon
77=Open Body 93" Whlbase
78=Open Body 103" Whlbase - Export
T=2WD
J,N=4WD
U=4WD (RHD)

BODY STYLES:

YJ=Wrangler (4X4) "S"
Weangler (4X4) SE
Wrangler (4X4) Sahara
Wrangler (4X4) Renegade
XJ=Cherokee SE
Cherokee Sport
Cherokee Country
ZJ=Grand Cherokee SE
Grand Cherokee Laredo
Grand Cherolee Limited
ZG=Grand Cherokee European
Y1=Wrangler
X1=Cherokee
Z1=Grand Cherokee
KDX=Vehicles

AR = Use as Required - = Non Illustrated Part P.A.R. = Paint as Required

« RETURN TO GROUP INDEX

LOCK, PARKING AUTOMATIC TRANSMISSION, 4 SPEED, AW4 CHEROKEE XJ
Figure 21E-730

21E-730

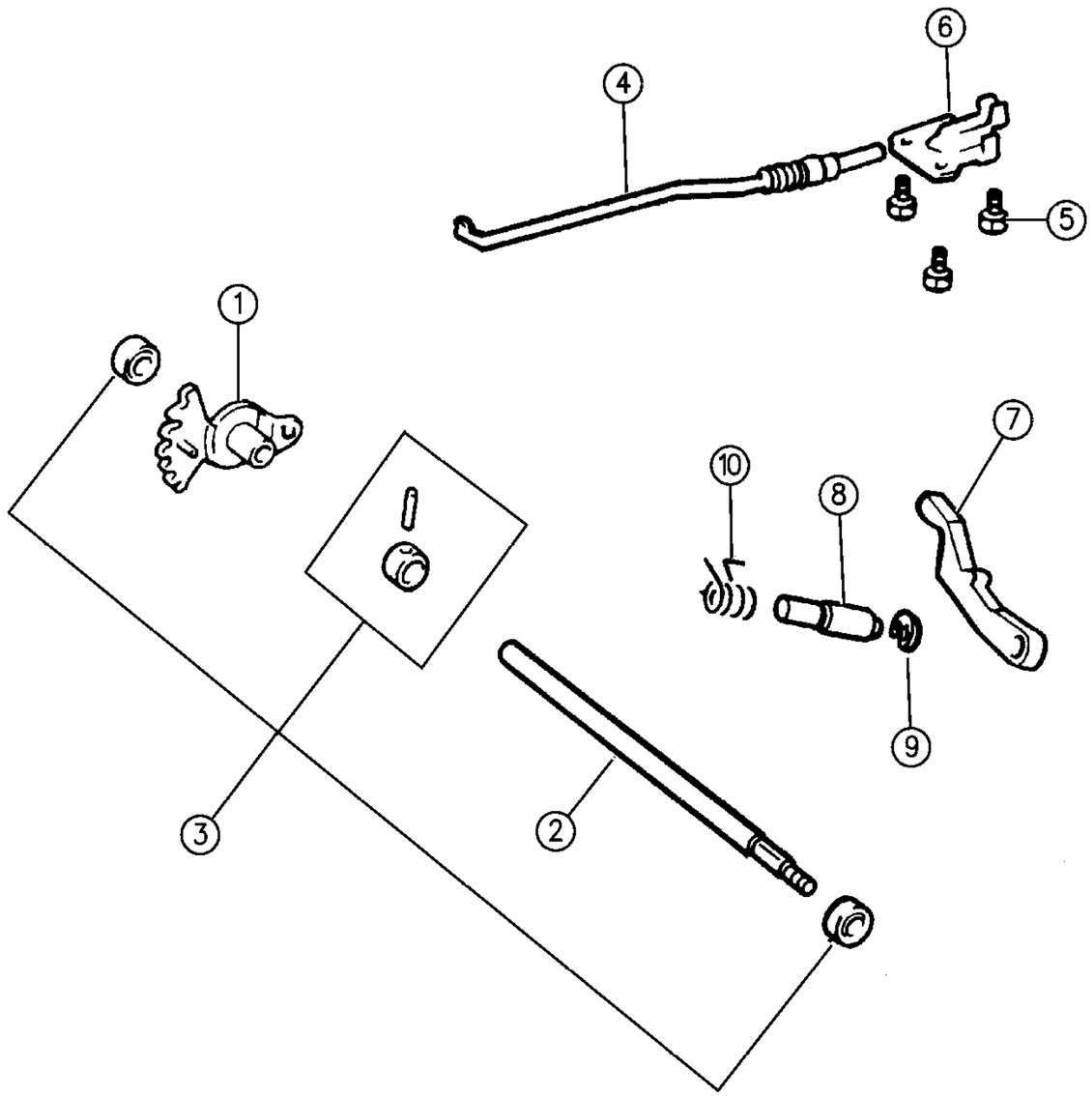

ITEM	PART NUMBER	QTY	BODY	MODEL	DESCRIPTION
1	8350 3774	1			LEVER, Manual Valve
2	8350 3725	1			SHAFT, Manual Valve Lever
3	8350 4332	1			REPAIR PACKAGE, (Includes 2 Seals, Pin) ***
4	8350 3781	1			ROD, Park Lock
5	8350 3783	3			BOLT, M6x1.0x14mm
6	8350 3780	1			BRACKET
7	8350 3779	1			PAWL
8	8350 3777	1			SHAFT
9	8350 3776	1			E-RING
10	8350 3778	1			SPRING

MODEL CODES:

72=2 DR Wagon
74=4 DR Wagon
77=Open Body 93" Whlbase
78=Open Body 103" Whlbase - Export
T=2WD
J,N=4WD
U=4WD (RHD)

BODY STYLES:

YJ=Wrangler (4X4) "S"
Weangler (4X4) SE
Wrangler (4X4) Sahara
Wrangler (4X4) Renegade

XJ=Cherokee SE
Cherokee Sport
Cherokee Country

ZJ=Grand Cherokee SE
Grand Cherokee Laredo
Grand Cherolee Limited
ZG=Grand Cherokee European

Y1=Wrangler
X1=Cherokee
Z1=Grand Cherokee
KDX=Vehicles

AR = Use as Required - = Non Illustrated Part P.A.R. = Paint as Required

« RETURN TO GROUP INDEX

CONTROLS, GEARSHIFT, FLOOR MOUNTED AUTOMATIC TRANSMISSION, AW4 CHEROKEE XJ
Figure 21E-1210

21E-1210

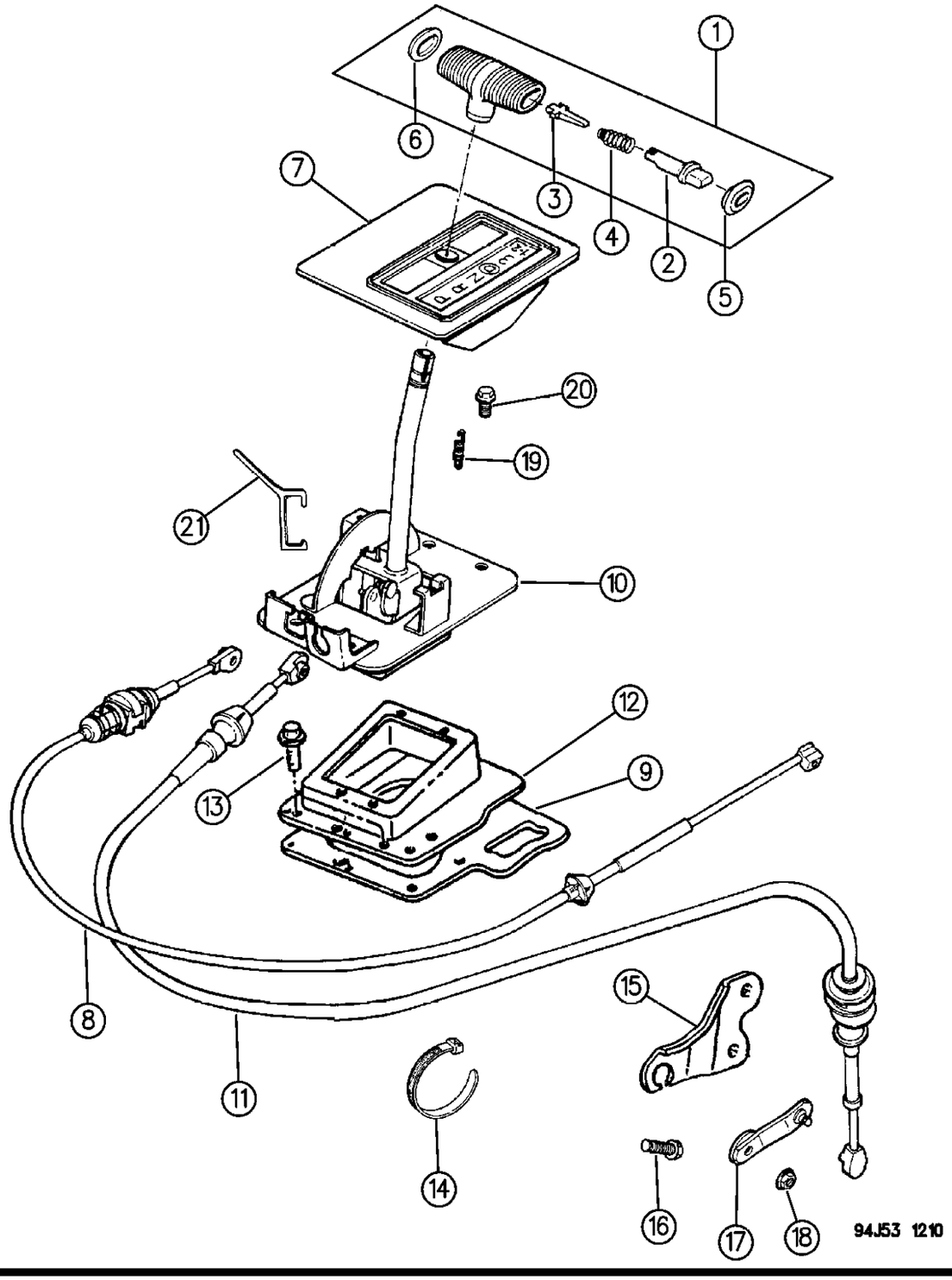

ITEM	PART NUMBER	QTY	BODY	MODEL	DESCRIPTION
1	5207 7560	1			HANDLE, Lever
2	5300 0211	1			BUTTON
3	5300 0865	1			LEVER
4	5300 0866	1			SPRING
5	5207 7561	1			CAP
6	5207 7562	1			CAP
7	5511 4582	1			BEZEL, Shift
	5511 5022	1		RHD	
8					CABLE, Gearshift Park Lock
	5300 4560	1			1994
	5207 8700	1			1995
	5207 8959	1			1996
9	5300 0659	1			SEAL, Shift Housing
10					HOUSING AND LEVER, Assy., Gearshift ***
	5207 8382	1			1994
	5207 8697	1			1995
	5210 4106				1996
	5207 8297	1		RHD	1994
	5207 8699	1		RHD	1995
	5210 4107	1		RHD	1996
11	5207 7532	1			CABLE, Gearshift Lever
12	5300 0704	1			COVER, Shift Housing
13	J400 1701	9			SCREW, 10-16 x 1/2"
	1150 2843	2			SCREW, Use w/CHINA, VENEZEULA
14	3420 1788	1			STRAP
15	5300 7746	1			BRACKET, Shift Cable Mtg.
16	3420 1871	2			BOLT, M8x1.25x18
17	5300 7747	1			LEVER, Manual Valve Shaft Shift
18	J420 0046	1			NUT, M8x1.25
19	5300 3350	1			SPRING
20	1150 4284	4			BOLT, M8x1.25x18
21	5207 8063	1			GAGE, Auto Floor Shift Gear Selector ***

MODEL CODES:

72=2 DR Wagon
74=4 DR Wagon
77=Open Body 93" Whlbase
78=Open Body 103" Whlbase - Export
T=2WD
J,N=4WD
U=4WD (RHD)

BODY STYLES:

YJ=Wrangler (4X4) "S"
Weangler (4X4) SE
Wrangler (4X4) Sahara
Wrangler (4X4) Renegade
XJ=Cherokee SE
Cherokee Sport
Cherokee Country
ZJ=Grand Cherokee SE
Grand Cherokee Laredo
Grand Cherolee Limited
ZG=Grand Cherokee European
Y1=Wrangler
X1=Cherokee
Z1=Grand Cherokee
KDX=Vehicles

AR = Use as Required - = Non Illustrated Part P.A.R. = Paint as Required

« RETURN TO GROUP INDEX

CONTROLS, GEARSHIFT, COLUMN MOUNTED AUTOMATIC TRANSMISSION, AW4 CHEROKEE XJ
Figure 21E-1220

21E-1220

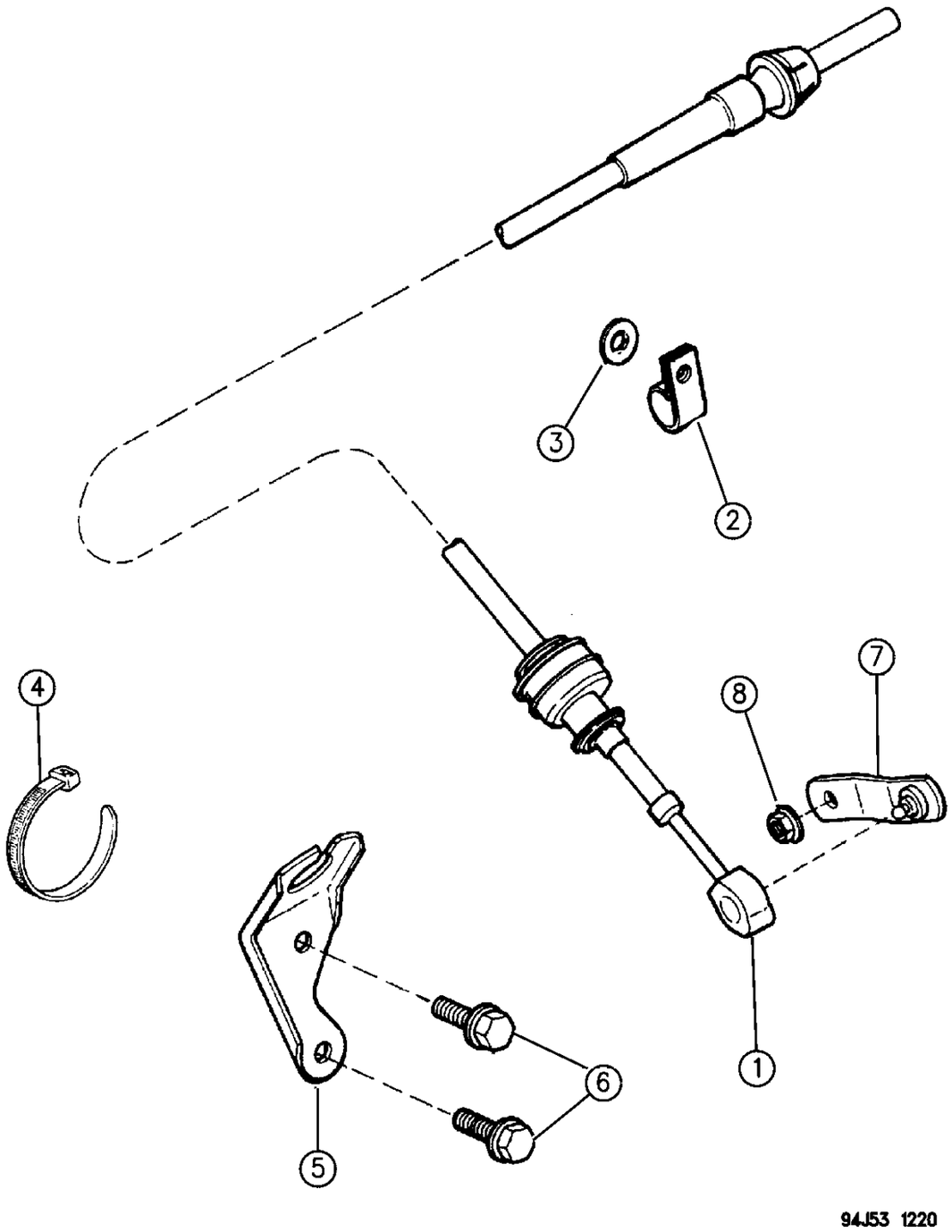

ITEM	PART NUMBER	QTY	BODY	MODEL	DESCRIPTION
1	5300 4562	1			CABLE, Gearshift
2	J012 5924	1			CLIP
3	J400 3084	1			NUT, Push 3/8 Dia.
4	3420 1788	1			STRAP
5	5300 7746	1			BRACKET, Shift Cable
6	3420 1871	2			BOLT, M8x1.25x25
7	5300 7747	1			LEVER, Manual Valve Shaft Shift
8	J420 0046	1			NUT, M8x1.25

MODEL CODES:

72=2 DR Wagon
74=4 DR Wagon
77=Open Body 93" Whlbase
78=Open Body 103" Whlbase - Export
T=2WD
J,N=4WD
U=4WD (RHD)

BODY STYLES:

YJ=Wrangler (4X4) "S"
Weangler (4X4) SE
Wrangler (4X4) Sahara
Wrangler (4X4) Renegade
XJ=Cherokee SE
Cherokee Sport
Cherokee Country
ZJ=Grand Cherokee SE
Grand Cherokee Laredo
Grand Cherolee Limited
ZG=Grand Cherokee European
Y1=Wrangler
X1=Cherokee
Z1=Grand Cherokee
KDX=Vehicles

AR = Use as Required - = Non Illustrated Part P.A.R. = Paint as Required

« RETURN TO GROUP INDEX

SAGIPARTS

GROUP-21D
AUTOMATIC TRANSMISSION (46RH)

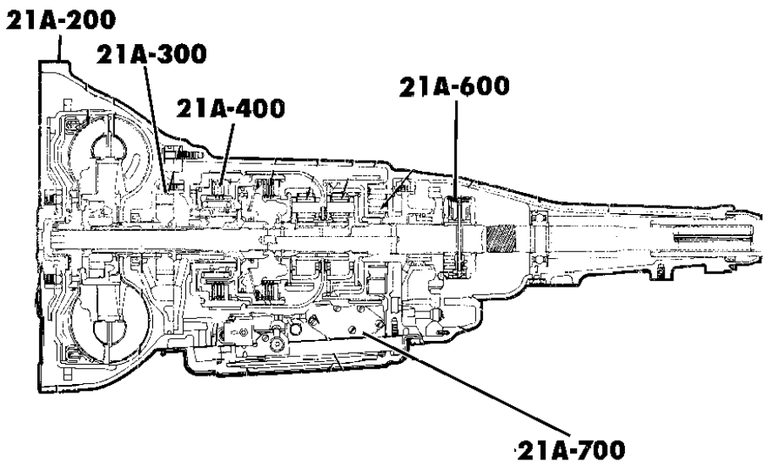

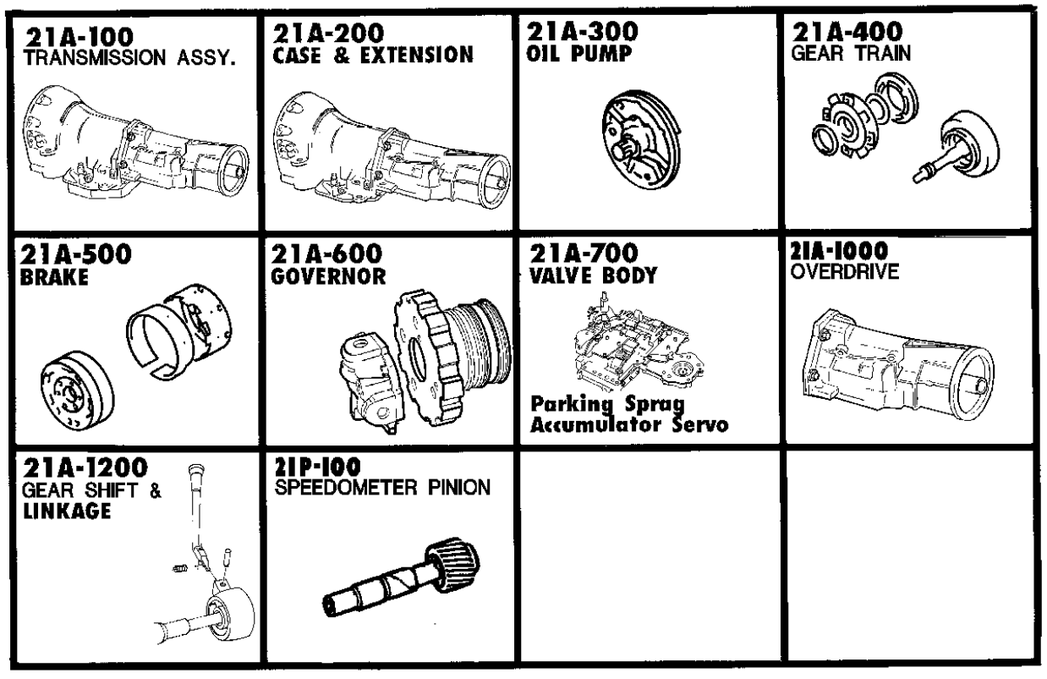

GROUP 21D - TRANS. AUTO 46RH 4 SPEED

ILLUSTRATION TITLE — **GROUP-FIG. NO.**

TRANSMISSION ASSEMBLY
TRANSMISSION ASSEMBLY AUTOMATIC TRANSMISSION, 4 SPEED, 46RH GRAND CHEROKEE ZJ . . . . Fig. 21D-110

CASE AND EXTENSION
CASE, AND RELATED PARTS AUTOMATIC TRANSMISSION, 4 SPEED, 46RH GRAND CHEROKEE ZJ . . . Fig. 21D-210

OIL PUMP
PUMP, OIL WITH REACTION SHAFT AUTOMATIC TRANSMISSION, 4 SPEED, 46RH GRAND CHEROKEE ZJ . . . . . Fig. 21D-310

GEAR TRAIN
CLUTCH, FRONT AND REAR WITH GEAR TRAIN AUTOMATIC TRANSMISSION, 4 SPEED, 46RH GRAND CHEROKEE ZJ . . . . . Fig. 21D-410
GEAR TRAIN AND INTERMEDIATE SHAFT AUTOMATIC TRANSMISSION, 4 SPEED, 46RH GRAND CHEROKEE ZJ . . . . . Fig. 21D-420
OUTPUT SHAFT AUTOMATIC TRANSMISSION, 4 SPEED, 46RH GRAND CHEROKEE ZJ . . . . . Fig. 21D-430

BANDS, REVERSE AND KICKDOWN
BANDS, REVERSE AND KICKDOWN WITH LINKAGE AUTOMATIC TRANSMISSION, 4 SPEED, 46RH GRAND CHEROKEE ZJ . . . . . Fig. 21D-510
GOVERNOR AUTOMATIC TRANSMISSION, 4 SPEED, 46RH GRAND CHEROKEE ZJ . . . . . Fig. 21D-610

VALVE BODY, SERVO AND PARKING SPRAG
VALVE BODY AUTOMATIC TRANSMISSION, 4 SPEED, 46RH GRAND CHEROKEE ZJ . . . . . Fig. 21D-710
SERVOS, ACCUMULATOR PISTON AND SPRING AUTOMATIC TRANSMISSION, 4 SPEED, 46RH GRAND CHEROKEE ZJ . . . . . Fig. 21D-720
PARKING SPRAG AUTOMATIC TRANSMISSION, 4 SPEED, 46RH GRAND CHEROKEE ZJ . . . . . Fig. 21D-730

OVERDRIVE, GEAR TRAIN
CLUTCH, OVERDRIVE WITH GEAR TRAIN AUTOMATIC TRANSMISSION, 4 SPEED, 46RH GRAND CHEROKEE ZJ . . . . . Fig. 21D-1010

GEARSHIFT CONTROLS
CONTROLS, GEARSHIFT, FLOOR MOUNTED AUTOMATIC TRANSMISSION, 4 SPEED, 46RH GRAND CHEROKEE . . . . . Fig. 21D-1210

TRANSMISSION ASSEMBLY AUTOMATIC TRANSMISSION, 4 SPEED, 46RH GRAND CHEROKEE ZJ
Figure 21D-110

21D-110

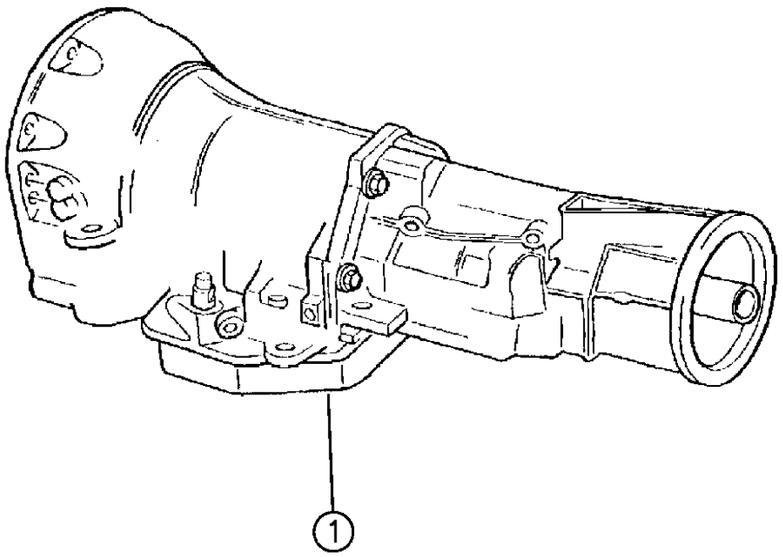

94J51 110

ITEM	PART NUMBER	QTY	BODY	MODEL	DESCRIPTION
1					TRANSMISSION ASSEMBLY, Complete w/Overdrive Assy., 4 Speed Auto., 46RH
	5211 8327	1		4WD	w/5.2L Eng., w/Lock-Up
	4617 670	1		4WD	OVERDRIVE ASSEMBLY, 46RH Rear Unit w/Extension *** w/5.2L Eng., w/Lock-Up

MODEL CODES:

72=2 DR Wagon
74=4 DR Wagon
77=Open Body 93" Whlbase
78=Open Body 103" Whlbase - Export
T=2WD
J,N=4WD
U=4WD (RHD)

BODY STYLES:

YJ=Wrangler (4X4) "S"
Weangler (4X4) SE
Wrangler (4X4) Sahara
Wrangler (4X4) Renegade
XJ=Cherokee SE
Cherokee Sport
Cherokee Country
ZJ=Grand Cherokee SE
Grand Cherokee Laredo
Grand Cherolee Limited
ZG=Grand Cherokee European
Y1=Wrangler
X1=Cherokee
Z1=Grand Cherokee
KDX=Vehicles

AR = Use as Required - = Non Illustrated Part P.A.R. = Paint as Required

« RETURN TO GROUP INDEX

CASE, AND RELATED PARTS AUTOMATIC TRANSMISSION, 4 SPEED, 46RH GRAND CHEROKEE ZJ
Figure 21D-210

21D-210

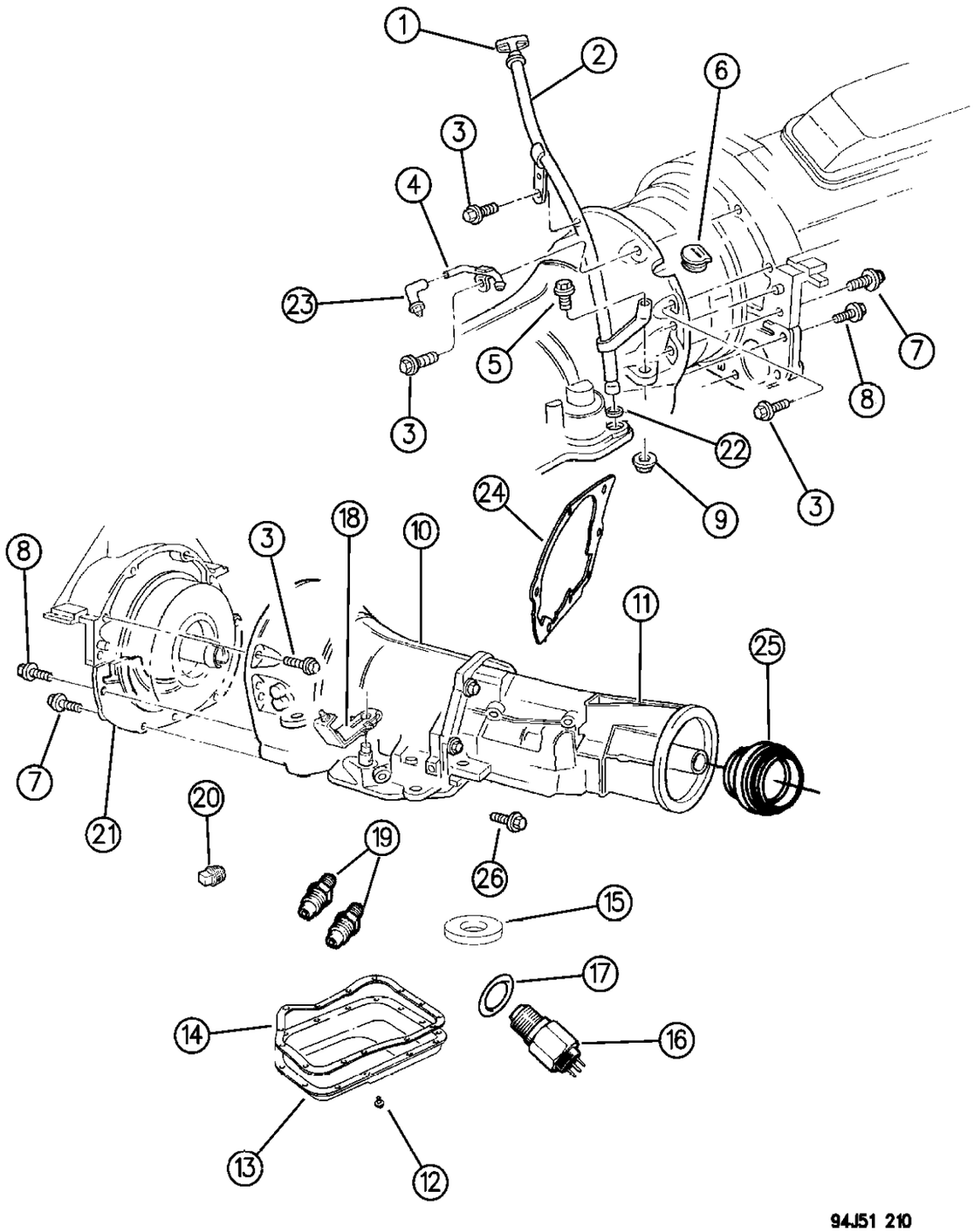

ITEM	PART NUMBER	QTY	BODY	MODEL	DESCRIPTION
	4746 378	1			GASKET and SEAL PACKAGE, A518, Major Repair
					Consists Of:
					1 - 4713276 GASKET & SEAL PKG., Valve Body & Servo
					1 - 4713126 GASKET & SEAL PKG., Gov. & Ext.
					1 - 4637078 GASKET & SEAL PKG., Frt. & Rr. Clutch
					1 - 4713049 GASKET & SEAL PKG., Frt. Pump
					1 - 4431696 SEAL, Cl. Piston, Outer
					1 - 4431697 SEAL, Cl. Piston, Inner
					1 - 4412583 FILTER, Piston Retainer
					1 - 4471565 GASKET, Piston Retainer to Case
1	5211 7710	1			INDICATOR, Trans. Oil Level
2	5300 9201	1			TUBE, Oil Pan Filler
3	6022 266	4			SCREW, Case to Block, 3/8-16 x 1-1/2"
4		1			TUBE, w/Clip, Transfer Case Vent (Not Serviced)
5	6024 027	1			SCREW, Case to Block, 7/16-14 x 1-1/4"
6	5211 7709	1			GROMMET, Timing Probe
7	6024 473	2			SCREW, Block to Case, 7/16-14 x 2"
8	6023 092	4			SCREW, Pan to Case, 1/4-20 x 1/2"
9	6025 021	1			NUT, 7/16-14
10	4539 046	1			CASE, Transmission, Use w/52118312 Trans. Assy.
	5211 8337	1			w/52118327 Trans. Assy.
11	4461 170	1		4WD	ADAPTER, Case
12	4723 548	14			SCREW, w/Washer, Oil Pan
13	4617 689	1			PAN, Trans. Oil
14	2464 324	1			GASKET, Oil Pan
15	3681 601	1			MAGNET, Case Chip Collector
16	3747 361	1			SWITCH, w/Washer Trans. Neutral Starter And B/U Light, w/3 Prongs
17	2408 143	1			WASHER, B/U Light Switch
18					LEVER, Manual Control
	5207 8253	1			1994
	5207 9171	1			1995
19	4617 517	2			CONNECTOR, Oil Cooler, Quick Disconnect 3/8 Tubing
20	6028 095	AR			PLUG, Pressure Check, 1/8-27 Pipe
21	5211 7556	1			COVER, Case Dust Shield, Lower
22	6030 608	1			SEAL, Oil Filler Tube
23	5209 7701	1			HOSE, And Filter Assy.
24	4471 565	1			GASKET, Ext. or Adapter
25	4269 956	1			OIL SEAL, Trans. Adapter
26	6033 745	5			SCREW, Ext. to Case, 3/8-16 x 1-1/2"
	6034 224	1			3/8-16 x 2-1/4"

MODEL CODES:

72=2 DR Wagon
74=4 DR Wagon
77=Open Body 93" Whlbase
78=Open Body 103" Whlbase - Export
T=2WD
J,N=4WD
U=4WD (RHD)

BODY STYLES:

YJ=Wrangler (4X4) "S"
Weangler (4X4) SE
Wrangler (4X4) Sahara
Wrangler (4X4) Renegade
XJ=Cherokee SE
Cherokee Sport
Cherokee Country
ZJ=Grand Cherokee SE
Grand Cherokee Laredo
Grand Cherolee Limited
ZG=Grand Cherokee European
Y1=Wrangler
X1=Cherokee
Z1=Grand Cherokee
KDX=Vehicles

AR = Use as Required - = Non Illustrated Part P.A.R. = Paint as Required

« RETURN TO GROUP INDEX

PUMP, OIL WITH REACTION SHAFT AUTOMATIC TRANSMISSION, 4 SPEED, 46RH GRAND CHEROKEE ZJ
Figure 21D-310

21D-310

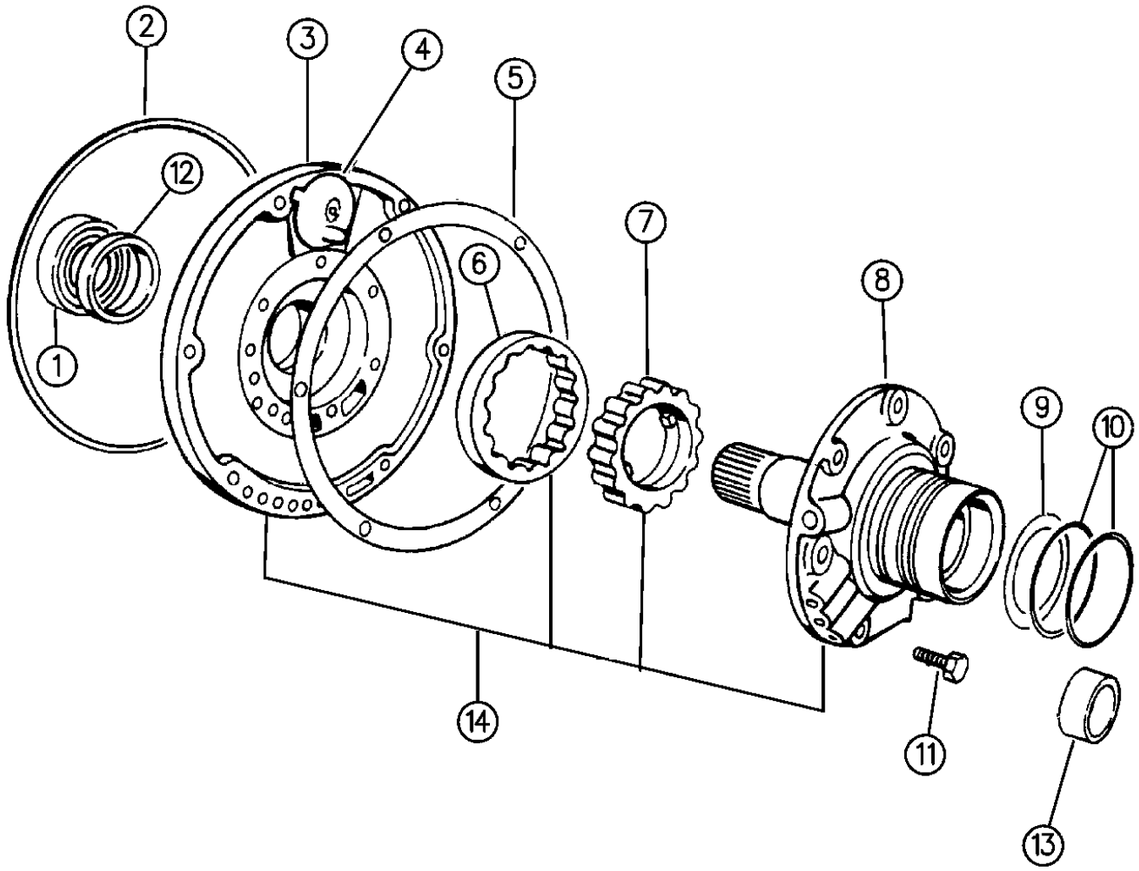

ITEM	PART NUMBER	QTY	BODY	MODEL	DESCRIPTION
	4746 109	1			GASKET and SEAL PACKAGE, Front Pump
					Consists Of:
					1 - 4531225 SEAL, T/C Impeller Hub
					1 - 1942021 SEAL, Oil Pump Hsg.
					1 - 4028377 GASKET, Oil Pump Hsg.
					2 - 2801054 SEAL RING, Input Shaft
					2 - 3743689 SEAL RING, Reaction Shaft Supt.
					1 - K685-1866 Instruction Sheet
1	4531 225	1			SEAL, T/C Impeller Hub
2	1942 021	1			SEAL, Frt. Pump Housing
3		1			HOUSING, w/Bushing, Plug and Rotors Frt. Pump (Serviced in Assy.)
4	3420 087	1			BAFFLE, w/Nail, Frt. Pump Hsg. Vent
5	4028 377	1			GASKET, Frt. Pump Housing
6		1			ROTOR, (Serviced in Hsg. Assy.)
7		1			ROTOR, (Serviced in Hsg. Assy.)
8	4617 623	1			SHAFT, w/Support, Reaction, Use w/52118312 Trans. Assy.
		1			w/52118327 Trans. Assy. (Shaft, w/Support Serviced in Assy.)
9					WASHER, Frt. Clutch Thrust, Frt., 3-21/64" O.D.
	4617 161	AR			Green, .061" Thk.
	4617 162	AR			Red, .084" Thk.
	4617 166	AR			Yellow, .102" Thk.
10	3743 689	2			RING, Seal Reaction Shaft Support
11	0179 815	6			SCREW, Suppt, 5/16-18 x 11/16"
12		1			BUSHING, Frt. Pump Hsg. (Serviced in Assy.)
13		1			BUSHING, Reaction Shaft, 1.30" O.D. (Serviced in Assy.)
14	4761 572	1			PUMP ASSEMBLY, w/Housing, Support and Reaction Shaft Oil, w/Lock-Up

MODEL CODES:

72=2 DR Wagon
74=4 DR Wagon
77=Open Body 93" Whlbase
78=Open Body 103" Whlbase - Export
T=2WD
J,N=4WD
U=4WD (RHD)

BODY STYLES:

YJ=Wrangler (4X4) "S"
Weangler (4X4) SE
Wrangler (4X4) Sahara
Wrangler (4X4) Renegade
XJ=Cherokee SE
Cherokee Sport
Cherokee Country
ZJ=Grand Cherokee SE
Grand Cherokee Laredo
Grand Cherolee Limited
ZG=Grand Cherokee European
Y1=Wrangler
X1=Cherokee
Z1=Grand Cherokee
KDX=Vehicles

AR = Use as Required - = Non Illustrated Part P.A.R. = Paint as Required

CLUTCH, FRONT AND REAR WITH GEAR TRAIN AUTOMATIC TRANSMISSION, 4 SPEED, 46RH GRAND CHEROKEE ZJ
Figure 21D-410

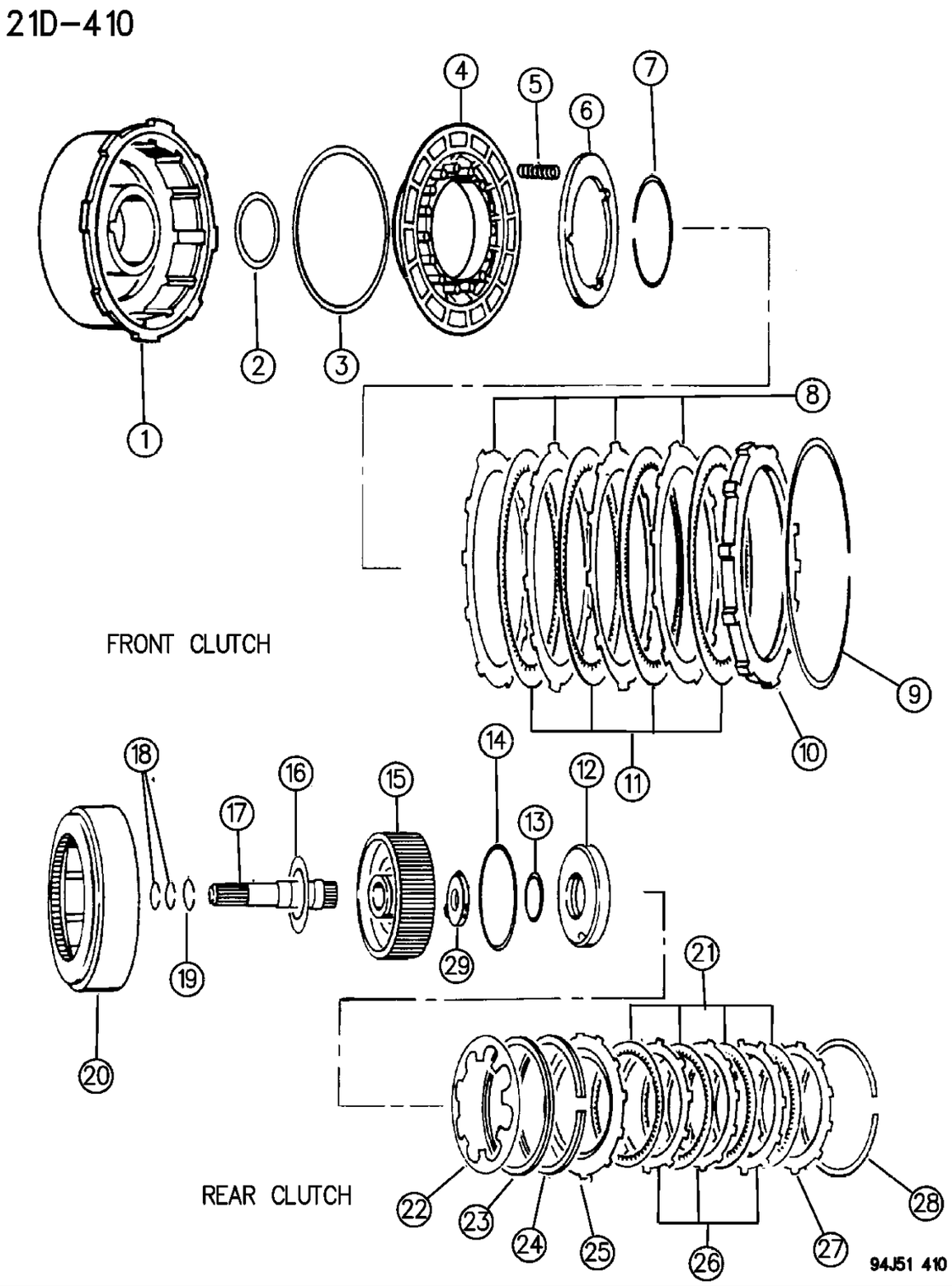

ITEM	PART NUMBER	QTY	BODY	MODEL	DESCRIPTION
	4637 078	1			SEAL PACKAGE, Front and Rear Clutch
					Consists Of:
					1 - 3410226 SEAL, Frt. Clutch Piston, Inner
					1 - 4058484 SEAL, Frt. Clutch Piston, Outer
					1 - 1942054 SEAL, Rear Clutch Piston, Inner
					1 - 2124835 SEAL, Rear Clutch Piston, Outer
					1 - 4428222 WASHER, Intermed. Shaft Thrust
					1 - 4505188 PLATE, Intermed. Shaft Thrust
					1 - 4505186 WASHER, Intermed. Shaft Thrust
1	4058 437	1			RETAINER, w/Bushing, Front Clutch
	4058 647	1			BUSHING, Frt. Clutch Retainer
2	3410 226	1			SEAL, Frt. Clutch Piston, Inner
3	4058 484	1			SEAL, Frt. Clutch Piston, Outer
4	2464 651	1			PISTON, Frt. Clutch
	0147 483	1			BALL, 3/16" Dia.
5	2801 243	9			SPRING, Frt. Clutch Piston
6	2801 949	1			RETAINER, Frt. Clutch Piston Spring
	0147 483	1			BALL, 3/16" Dia.
7	2124 824	1			SNAP RING, Frt. Clutch, Inner, .060" Thk., 3" I.D.
8	2124 826	3			PLATE, Frt. Clutch
9	3410 570	1			SNAP RING, Frt. Clutch, .050" Thk., 7-8/64" O.D.
10	4617 567	1			PLATE, Frt. Clutch Reaction
11	4617 201	3			DISC, Frt. Clutch
12	3743 624	1			PISTON, Rr. Clutch
	0147 483	1			BALL, 3/16" Dia.
13	1942 054	1			SEAL, Rr. Clutch Piston, Inner
14	2124 835	1			SEAL, Rr. Clutch Piston, Outer
15	4617 855	1			RETAINER, Rear Clutch Piston
	4058 443	1			RING, Piston Ret. Oil Seal Lock, 1-7/8" O.D.
16	4617 161	1			WASHER, Frt. Clutch Thrust, Rear
17	4617 396	1			SHAFT, Input w/Lock-Up
18	4741 836	2			SEAL RING, Input Shaft, Frt. & Rr.
19	2124 872	1			SNAP RING, Rr. Clutch Piston Retainer, .060" Thk., 1-31/64" O.D.
20	3743 622	1			RETAINER, Rear Clutch
21	5252 259	4			DISC, Rr. Clutch
22	3743 621	1			SPRING, Rr. Clutch Piston
23	3515 077	1			SPACER, Rr. Clutch Piston Spring, Plastic, 6-13/16" O.D.
24	2466 806	1			SPRING, Rr. Clutch Wave
25	2466 803	1			PLATE, Rr. Clutch Pressure, Frt.
26	2124 826	3			PLATE, Rr. Clutch Separator
27	4617 567	1			PLATE, Rr. Clutch Reactioin

MODEL CODES:

72=2 DR Wagon
74=4 DR Wagon
77=Open Body 93" Whlbase
78=Open Body 103" Whlbase - Export
T=2WD
J,N=4WD
U=4WD (RHD)

BODY STYLES:

YJ=Wrangler (4X4) "S"
Weangler (4X4) SE
Wrangler (4X4) Sahara
Wrangler (4X4) Renegade
XJ=Cherokee SE
Cherokee Sport
Cherokee Country
ZJ=Grand Cherokee SE
Grand Cherokee Laredo
Grand Cherolee Limited
ZG=Grand Cherokee European
Y1=Wrangler
X1=Cherokee
Z1=Grand Cherokee
KDX=Vehicles

AR = Use as Required - = Non Illustrated Part P.A.R. = Paint as Required

CLUTCH, FRONT AND REAR WITH GEAR TRAIN AUTOMATIC TRANSMISSION, 4 SPEED, 46RH GRAND CHEROKEE ZJ
Figure 21D-410

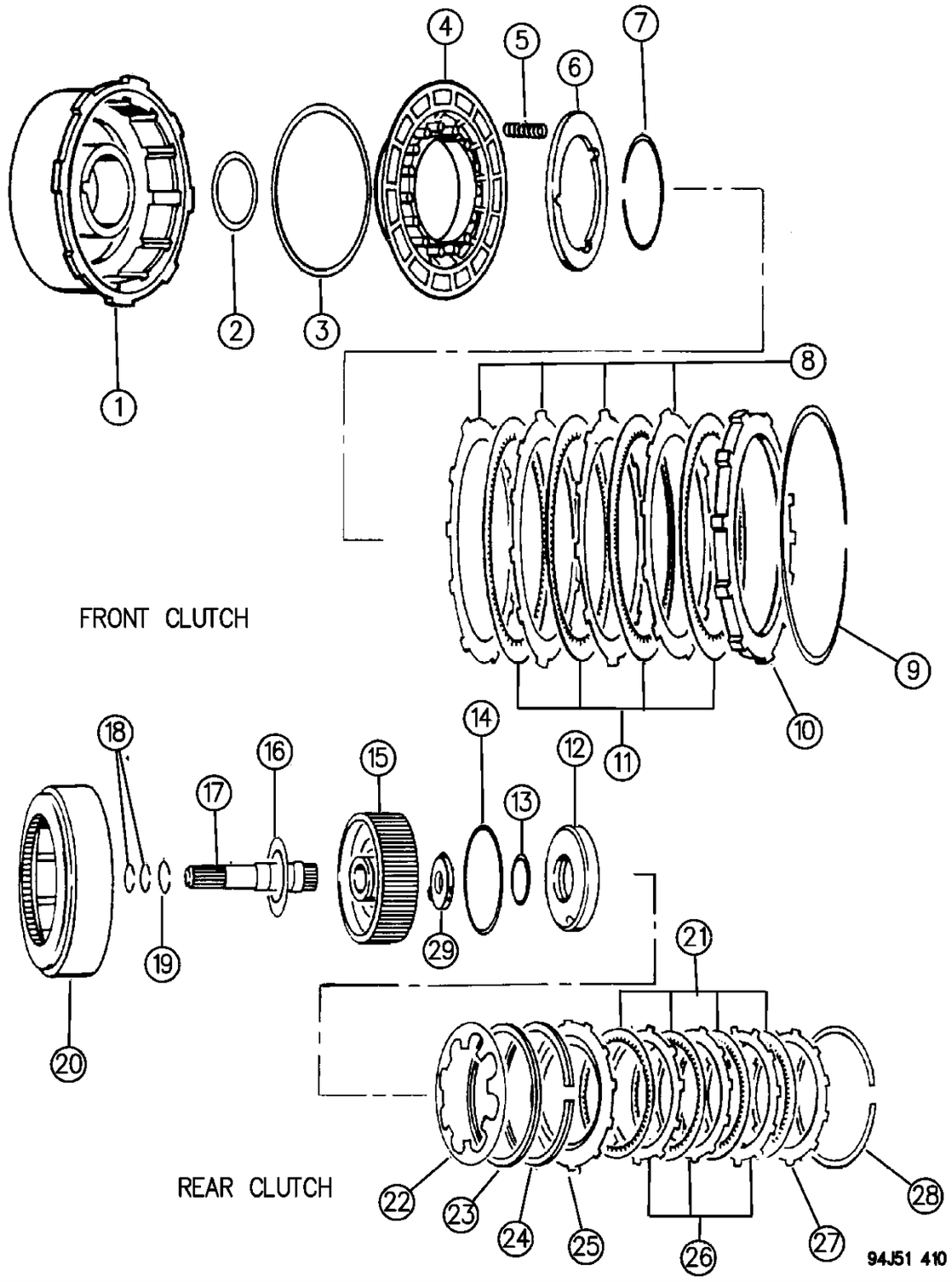

ITEM	PART NUMBER	QTY	BODY	MODEL	DESCRIPTION
28					SNAP RING, Rr. Clutch Reaction Plate, 7" O.D.
	1942 063	AR			.060" Thk.
	1942 064	AR			.074" Thk.
	1942 065	AR			.088" Thk.
	2466 811	AR			.106" Thk.
29	4505 186	1			WASHER, Intermediate Shaft Thrust, w/3 Point Bronze Face, .068" Thk.

MODEL CODES:

72=2 DR Wagon
74=4 DR Wagon
77=Open Body 93" Whlbase
78=Open Body 103" Whlbase - Export
T=2WD
J,N=4WD
U=4WD (RHD)

BODY STYLES:

YJ=Wrangler (4X4) "S"
Weangler (4X4) SE
Wrangler (4X4) Sahara
Wrangler (4X4) Renegade
XJ=Cherokee SE
Cherokee Sport
Cherokee Country
ZJ=Grand Cherokee SE
Grand Cherokee Laredo
Grand Cherolee Limited
ZG=Grand Cherokee European
Y1=Wrangler
X1=Cherokee
Z1=Grand Cherokee
KDX=Vehicles

AR = Use as Required - = Non Illustrated Part P.A.R. = Paint as Required

GEAR TRAIN AND INTERMEDIATE SHAFT AUTOMATIC TRANSMISSION, 4 SPEED, 46RH GRAND CHEROKEE ZJ
Figure 21D-420

21D-420A

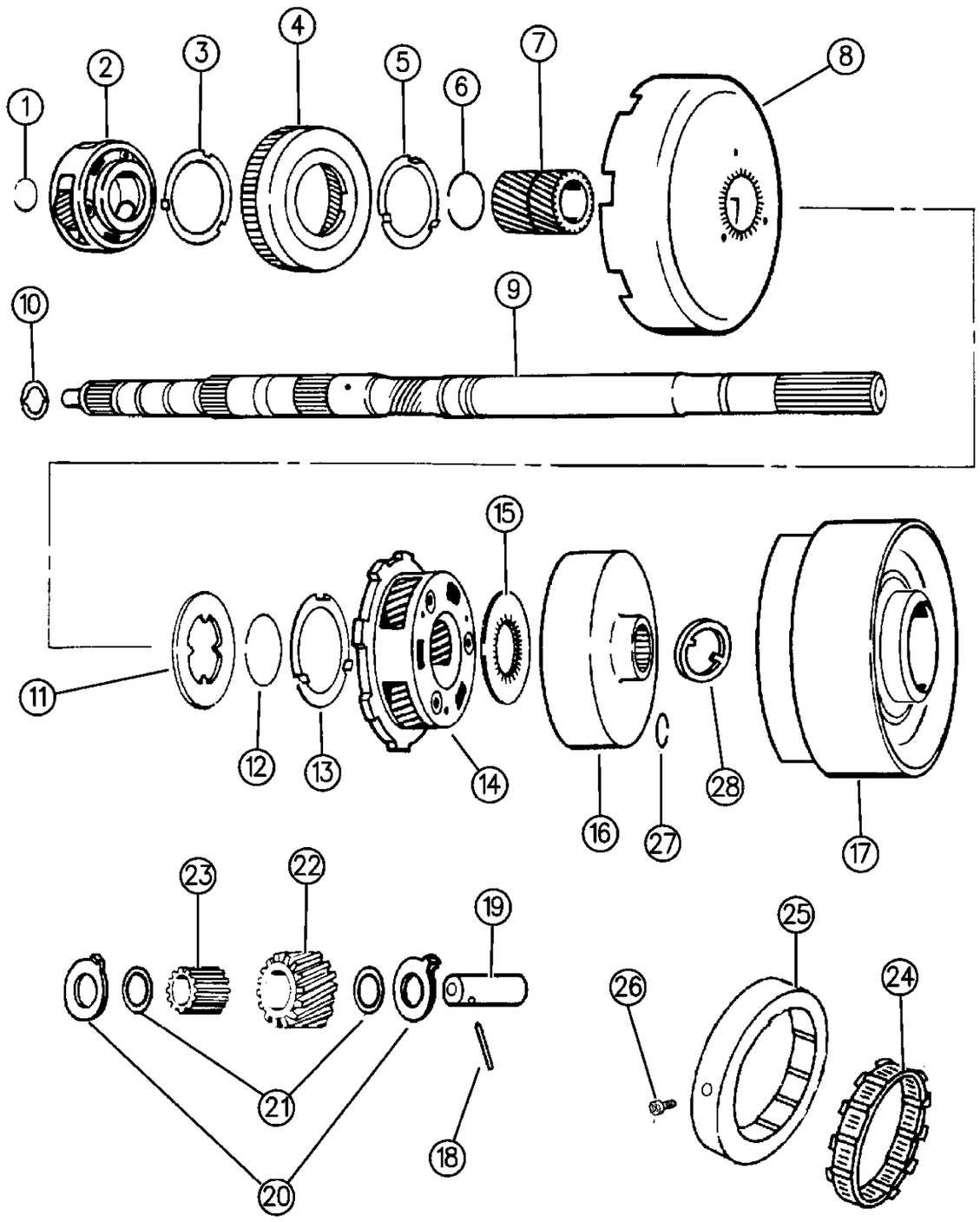

FRONT & REAR PLANET PINION CARRIER GEARS

94J51 420

ITEM	PART NUMBER	QTY	BODY	MODEL	DESCRIPTION
1					SNAP RING, Intermediate Shaft
	6030 982	AR			.048-.052" Thk.
	6024 311	AR			.055-.059" Thk.
	6024 312	AR			.062-.066" Thk.
2	4617 612	1			CARRIER ASSEMBLY, Front Planet Pinion, 4 Pinion
3	2801 060	1			WASHER, Frt. Carrier Thrust, w/4 Tabs, 3-13/32" O.D.
4	2892 656	1			GEAR, w/Support Frt. Annulus, 2-1/2" I.D. Center Hole
5	1942 081	1			WASHER, Sun Gear Driving Shell Thrust, w/3 Outside Tabs
6	1736 521	1			RING, Sun Gear Driving Shell Lock
7	2801 311	1			GEAR, w/Bushing, Sun
8	2400 662	1			SHELL, Sun Gear Driving
9	4617 611	1			SHAFT PACKAGE, w/Plug, Intermediate
10	4505 188	1			PLATE, Intermediate Shaft, Thrust .060" Thk.
11	1942 080	1			PLATE, Sun Gear Driving Shell Thrust, w/4 Inside Tongs
12	1736 521	1			RING, Sun Gear Driving Shell Lock
13	2801 060	1			WASHER, Carrier Thrust, Rear, w/4 Tabs, 3-13/32" O.D.
14	2466 539	1			CARRIER ASSEMBLY, Rear Planet Pinion
15	2400 580	1			PLATE, Rear Annulus Gear Thrust, w/31 Inside Teeth, 3-23/64" O.D.
16	4617 779	1			GEAR, w/Support, Rear Annulus, 3-1/2" I.D. Center Hole
17	4531 242	1			DRUM, w/Race, Reverse, Use w/52118312 Trans. Assy.
	5211 8057	1			w/52118327 Trans. Assy.
-	4773 432	1			DRUM & PISTON RETAINER PACKAGE, ***
18	6024 666	AR			PIN, Frt. and Rr. Planet Pinion Shaft
19	4428 223	AR			SHAFT, Frt. and Rr. Planet Pinion
20	2801 315	AR			WASHER, Frt. and Rr. Planet Pinion
21	2204 649	AR			RING, Frt. and Rr. Pinion Roller Thrust
22	2400 667	AR			PINION, Frt. and Rr. Planet
23	3743 664	AR			ROLLER, Frt. and Rr. Pinion
24	4617 199	1			CLUTCH ASSEMBLY, 14 Rollers and Springs, "O" Running Clutcg .
25	4471 473	1			CAM, "O" Running Clutch (14 Cam Lobes)
26	0125 735	1			SET SCREW, Cam Retaining, 1/4-20 x 3/8"
27	6033 591	1			SNAP RING, Reverse Drum Retaining
28	5211 8059	1			WASHER, Reverse Drum, Thrust, Use w/52118327 Transmission Assembly

MODEL CODES:

72=2 DR Wagon
74=4 DR Wagon
77=Open Body 93" Whlbase
78=Open Body 103" Whlbase - Export
T=2WD
J,N=4WD
U=4WD (RHD)

BODY STYLES:

YJ=Wrangler (4X4) "S"
Weangler (4X4) SE
Wrangler (4X4) Sahara
Wrangler (4X4) Renegade
XJ=Cherokee SE
Cherokee Sport
Cherokee Country
ZJ=Grand Cherokee SE
Grand Cherokee Laredo
Grand Cherolee Limited
ZG=Grand Cherokee European
Y1=Wrangler
X1=Cherokee
Z1=Grand Cherokee
KDX=Vehicles

AR = Use as Required - = Non Illustrated Part P.A.R. = Paint as Required

« RETURN TO GROUP INDEX

OUTPUT SHAFT AUTOMATIC TRANSMISSION, 4 SPEED, 46RH GRAND CHEROKEE ZJ
Figure 21D-430

21D-430

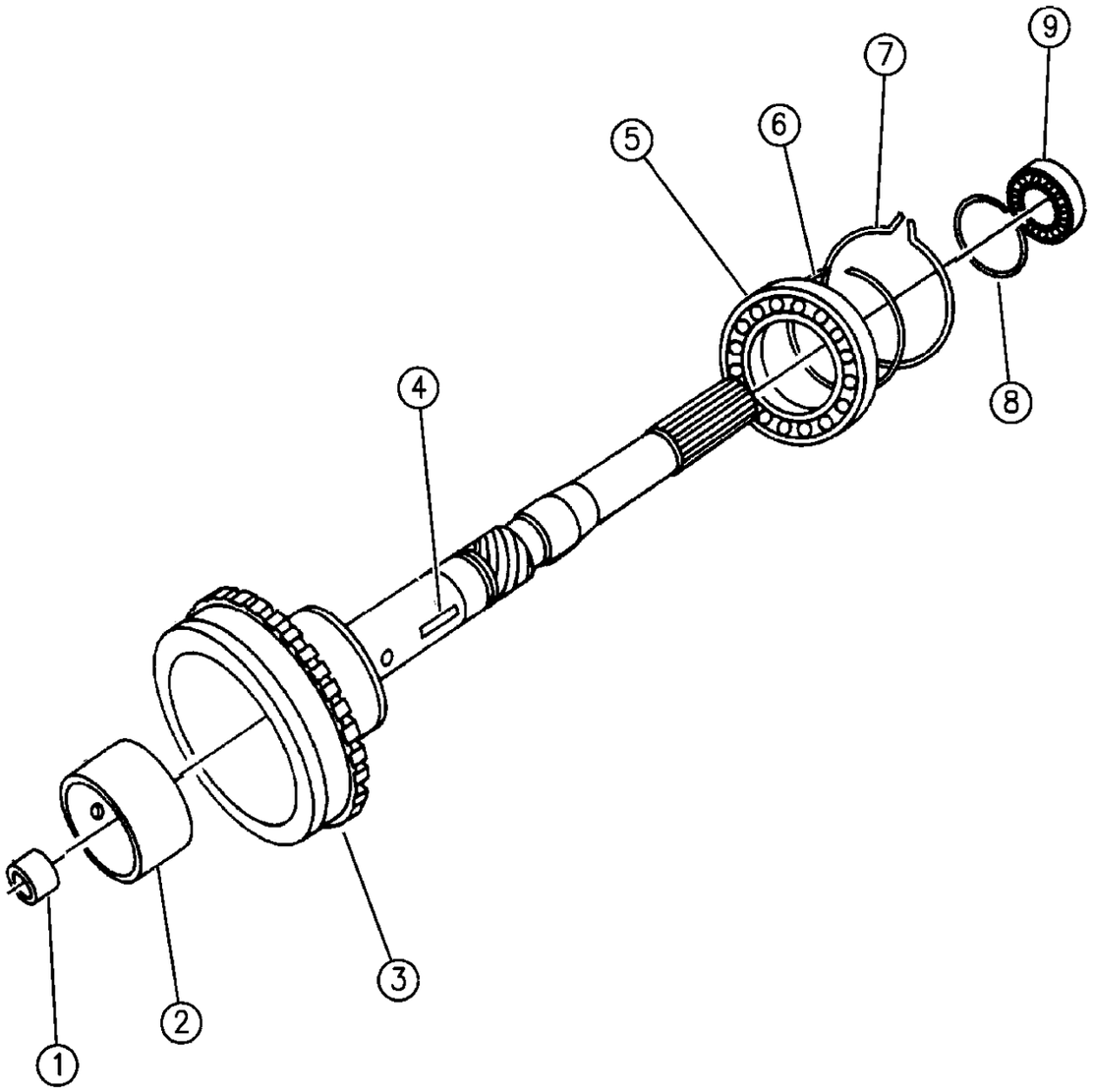

94J51 430

ITEM	PART NUMBER	QTY	BODY	MODEL	DESCRIPTION
1		1			BUSHING, O/P Shaft Pilot, (Serviced in O/P Shaft)
2					BUSHING, Not Serviced
3	4762 062	1			SHAFT ASSEMBLY, w/Key, Output
4		1			KEY, O/P Shaft Gov. Drive (Not Serviced)
5	4461 008	1			BEARING, O/P Shaft Front
6	4461 068	1			SNAP RING, O/P Shaft Front Beaaring
7	4461 057	1			SNAP RING, O/P Shaft Brg. to Case
8	4461 069	1			SNAP RING, O/P Shaft Rear Bearing
9	2466 224	1			BEARING, O/P Shaft, Rear, 2.8344 O.D.

MODEL CODES:

72=2 DR Wagon
74=4 DR Wagon
77=Open Body 93" Whlbase
78=Open Body 103" Whlbase - Export
T=2WD
J,N=4WD
U=4WD (RHD)

BODY STYLES:

YJ=Wrangler (4X4) "S"
Weangler (4X4) SE
Wrangler (4X4) Sahara
Wrangler (4X4) Renegade
XJ=Cherokee SE
Cherokee Sport
Cherokee Country
ZJ=Grand Cherokee SE
Grand Cherokee Laredo
Grand Cherolee Limited
ZG=Grand Cherokee European
Y1=Wrangler
X1=Cherokee
Z1=Grand Cherokee
KDX=Vehicles

AR = Use as Required - = Non Illustrated Part P.A.R. = Paint as Required

« RETURN TO GROUP INDEX

BANDS, REVERSE AND KICKDOWN WITH LINKAGE AUTOMATIC TRANSMISSION, 4 SPEED, 46RH GRAND CHEROKEE ZJ
Figure 21D-510

21D-510

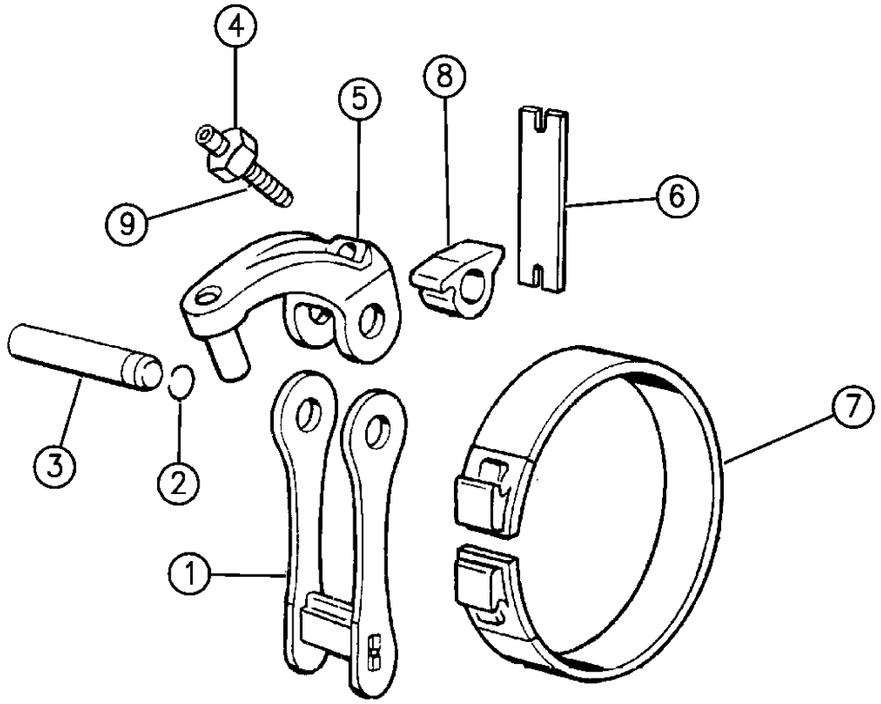

REVERSE BAND

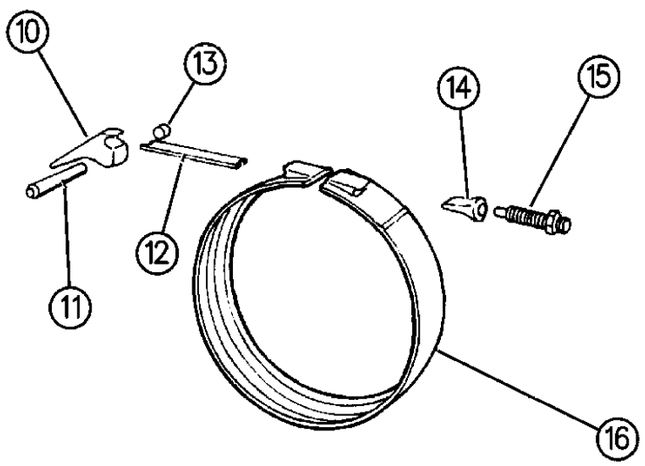

KICKDOWN BAND

94J51 510

ITEM	PART NUMBER	QTY	BODY	MODEL	DESCRIPTION
1	4617 044	1			LINK, w/Anchor, Reverse Band
2	6030 910	1			SEAL, Reverse Band Lever Shaft
3	2124 857	1			SHAFT, Reverse Band Lever
4	0271 506	1			NUT, Adj. Screw Lock, 7/16-20
5	4617 028	1			LEVER, w/Stem, Reverse Band
6	4471 497	1			STRUT, Reverse Band
7	4471 476	1			BAND, Reverse
8	4617 014	1			LEVER, Reverse Band Short
9	1942 141	1			SCREW, Reverse Band Adjusting
10	2125 067	1			LEVER, Kickdown Band
11	4531 181	1			SHAFT, Kickdown Lever
12	2124 848	1			STRUT, Kickdown Band
13		1			PLUG, Shaft Lever (Not Serviced)
14	3743 338	1			ANCHOR, Kickdown Band
15	2400 389	1			SCREW, Kickdown Band Adjusting
	0124 934	1			LOCK NUT, Kickdown Band Adj. Screw, 1/2-20
16	4329 853	1			BAND, Kickdown

MODEL CODES:

72=2 DR Wagon
74=4 DR Wagon
77=Open Body 93" Whlbase
78=Open Body 103" Whlbase - Export
T=2WD
J,N=4WD
U=4WD (RHD)

BODY STYLES:

YJ=Wrangler (4X4) "S"
Weangler (4X4) SE
Wrangler (4X4) Sahara
Wrangler (4X4) Renegade
XJ=Cherokee SE
Cherokee Sport
Cherokee Country
ZJ=Grand Cherokee SE
Grand Cherokee Laredo
Grand Cherolee Limited
ZG=Grand Cherokee European
Y1=Wrangler
X1=Cherokee
Z1=Grand Cherokee
KDX=Vehicles

AR = Use as Required - = Non Illustrated Part P.A.R. = Paint as Required

GOVERNOR AUTOMATIC TRANSMISSION, 4 SPEED, 46RH GRAND CHEROKEE ZJ
Figure 21D-610

21D-610A

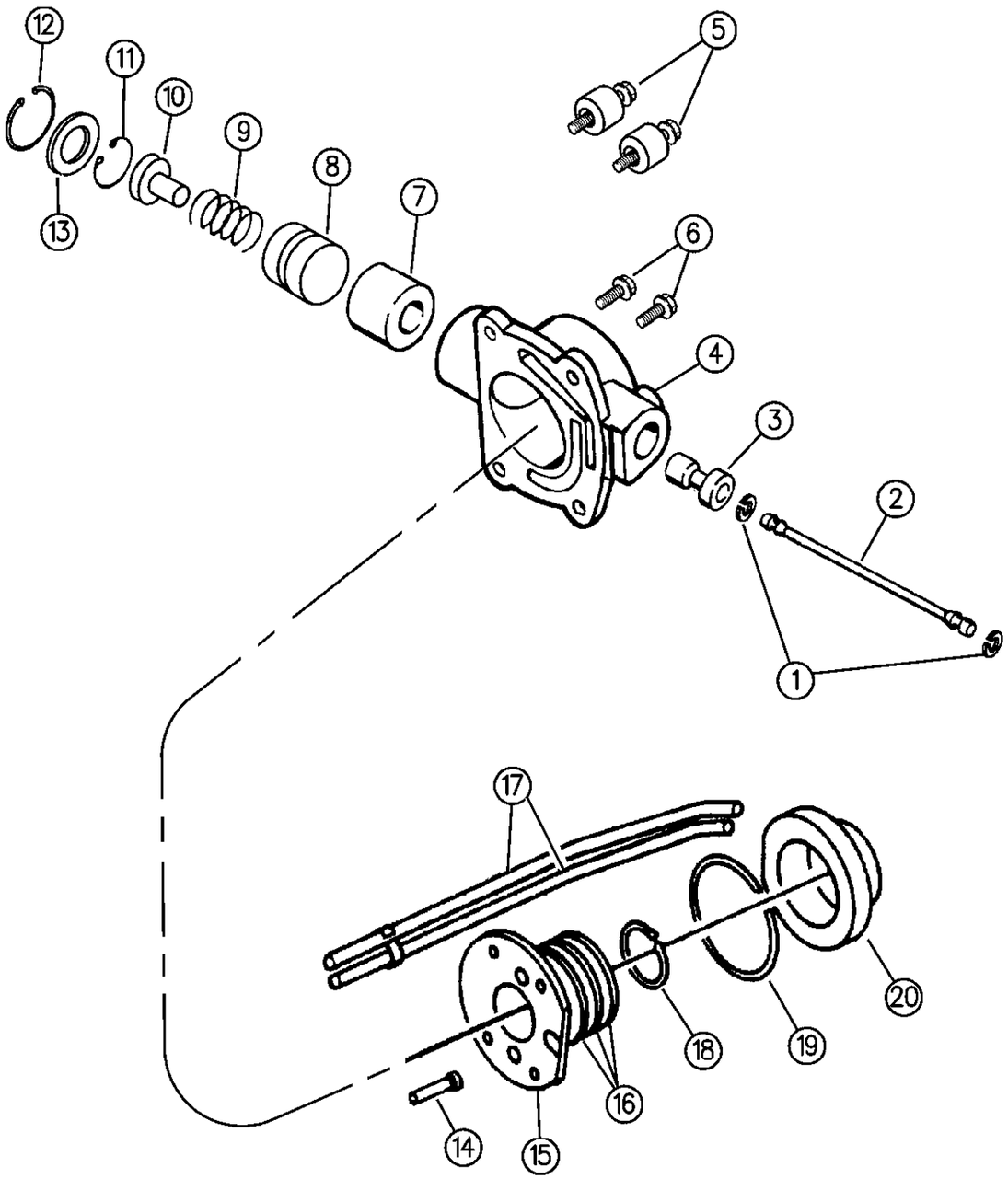

ITEM	PART NUMBER	QTY	BODY	MODEL	DESCRIPTION
	4713 938	1			GASKET and SEAL PACKAGE, Governor Repair
					Consists Of:
					1 - 3743519 FILTER, Governor
					1 - 4531192 GASKET, Ext. and Piston Retainer
					1 - 2801398 GASKET, Brg. Cover
					3 - 4461143 SEAL RING, Gov. Drive
					1 - 4531216 SEAL, O/P Shaft Yoke, 4x2
					1 - 4269956 SEAL, Ext. Adapter, 4x4
	4728 459	1			BODY PACKAGE, Governor Repair
					Consists Of:
					1 - 4617812 BODY, Governor
					1 - 3743519 FILTER, Governor
					3 - 4461143 SEAL RING, Gov. Drive
					4 - 6031613 BOLT, Gov. Body
					1 - 6022817 SNAP RING, Gov. Body
					1 - 4617064 Valve, Governor
					1 - 1556082 SHAFT, Gov. Valve
					2 - 1638461 SNAP RING, Valve, Outer
					1 - 2801398 GASKET, Brg. Cover
					1 - 4531192 GASKET, Ext. and Piston Retainer
					1 - 4461056 RING, Gov. Drive
					1 - 6034765 SNAP RING, Gov. Outer Wt.
					1 - 4617597 RETAINER, Gov. Weight
	4617 882	1			WEIGHT PACKAGE, Governor (4800 RPM)
					Consists Of:
					1 - 4617588 WEIGHT, Inner
					1 - 4617801 WEIGHT, Intermediate
					1 - 4617884 WEIGHT, Outer
					1 - 4617803 SPRING, Gov. Weight
					1 - 6034723 Snap Ring, Inner Wt.
1	1638 461	2			SNAP RING, Governor Valve Shaft
2	1556 082	1			SHAFT, Governor Valve
3	4617 064	1			VALVE, Governor
4		1			BODY, Governor (Serv. in Pkg.)
5	6034 788	2			SCREW, Gov. Body Mtg., 1/4-20 x 1.33" (Holds Counter Weights)
6	6031 613	2			SCREW, Gov. Body Mtg., 1/4-20 x 3/4"
7		1			WEIGHT, Gov., Outer (Serv. in Pkg.)
8		1			WEIGHT, Gov., Intermediate (Serv. in Pkg.)
9		1			SPRING, Gov. Weight (Serv. in Pkg.)
10		1			WEIGHT, Gov., Inner (Serv. in Pkg.)
11	6034 723	1			SNAP RING, Governor Weight, Inner, .675" O.D.
12	6034 765	1			SNAP RING, Governor Weight, Outer, 1.274" O.D.

MODEL CODES:

72=2 DR Wagon
74=4 DR Wagon
77=Open Body 93" Whlbase
78=Open Body 103" Whlbase - Export
T=2WD
J,N=4WD
U=4WD (RHD)

BODY STYLES:

YJ=Wrangler (4X4) "S"
Weangler (4X4) SE
Wrangler (4X4) Sahara
Wrangler (4X4) Renegade
XJ=Cherokee SE
Cherokee Sport
Cherokee Country
ZJ=Grand Cherokee SE
Grand Cherokee Laredo
Grand Cherolee Limited
ZG=Grand Cherokee European
Y1=Wrangler
X1=Cherokee
Z1=Grand Cherokee
KDX=Vehicles

AR = Use as Required - = Non Illustrated Part P.A.R. = Paint as Required

GOVERNOR AUTOMATIC TRANSMISSION, 4 SPEED, 46RH GRAND CHEROKEE ZJ
Figure 21D-610

21D-610A

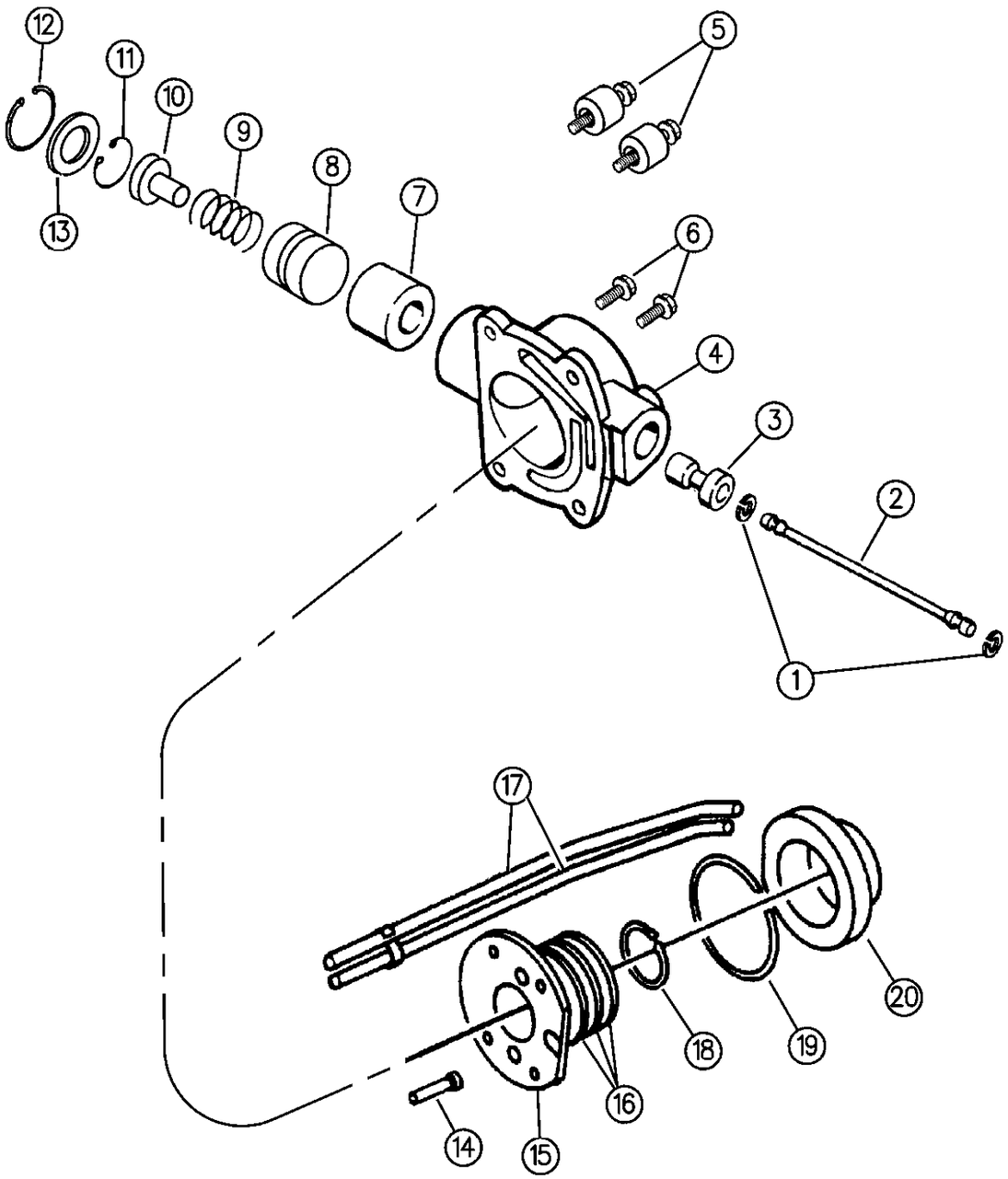

ITEM	PART NUMBER	QTY	BODY	MODEL	DESCRIPTION
13		1			RETAINER, Gov. Weight (Serv. in Pkg.)
14	3743 519	1			FILTER, Governor
15	4461 150	1			DRIVE, Governor ***
16	4461 143	3			SEAL RING, Governor Drive
17	4461 001	1			TUBE ASSEMBLY, w/Clip, Gov. Support
18	6022 817	1			SNAP RING, Governor Body
19	4461 056	1			SNAP RING, Governor Drive Support, 3-3/4" O.D.
20	4461 002	1			SUPPORT, Governor Drive

MODEL CODES:

72=2 DR Wagon
74=4 DR Wagon
77=Open Body 93" Whlbase
78=Open Body 103" Whlbase - Export
T=2WD
J,N=4WD
U=4WD (RHD)

BODY STYLES:

YJ=Wrangler (4X4) "S"
Weangler (4X4) SE
Wrangler (4X4) Sahara
Wrangler (4X4) Renegade
XJ=Cherokee SE
Cherokee Sport
Cherokee Country
ZJ=Grand Cherokee SE
Grand Cherokee Laredo
Grand Cherolee Limited
ZG=Grand Cherokee European
Y1=Wrangler
X1=Cherokee
Z1=Grand Cherokee
KDX=Vehicles

AR = Use as Required - = Non Illustrated Part P.A.R. = Paint as Required

VALVE BODY AUTOMATIC TRANSMISSION, 4 SPEED, 46RH GRAND CHEROKEE ZJ
Figure 21D-710

21D-710

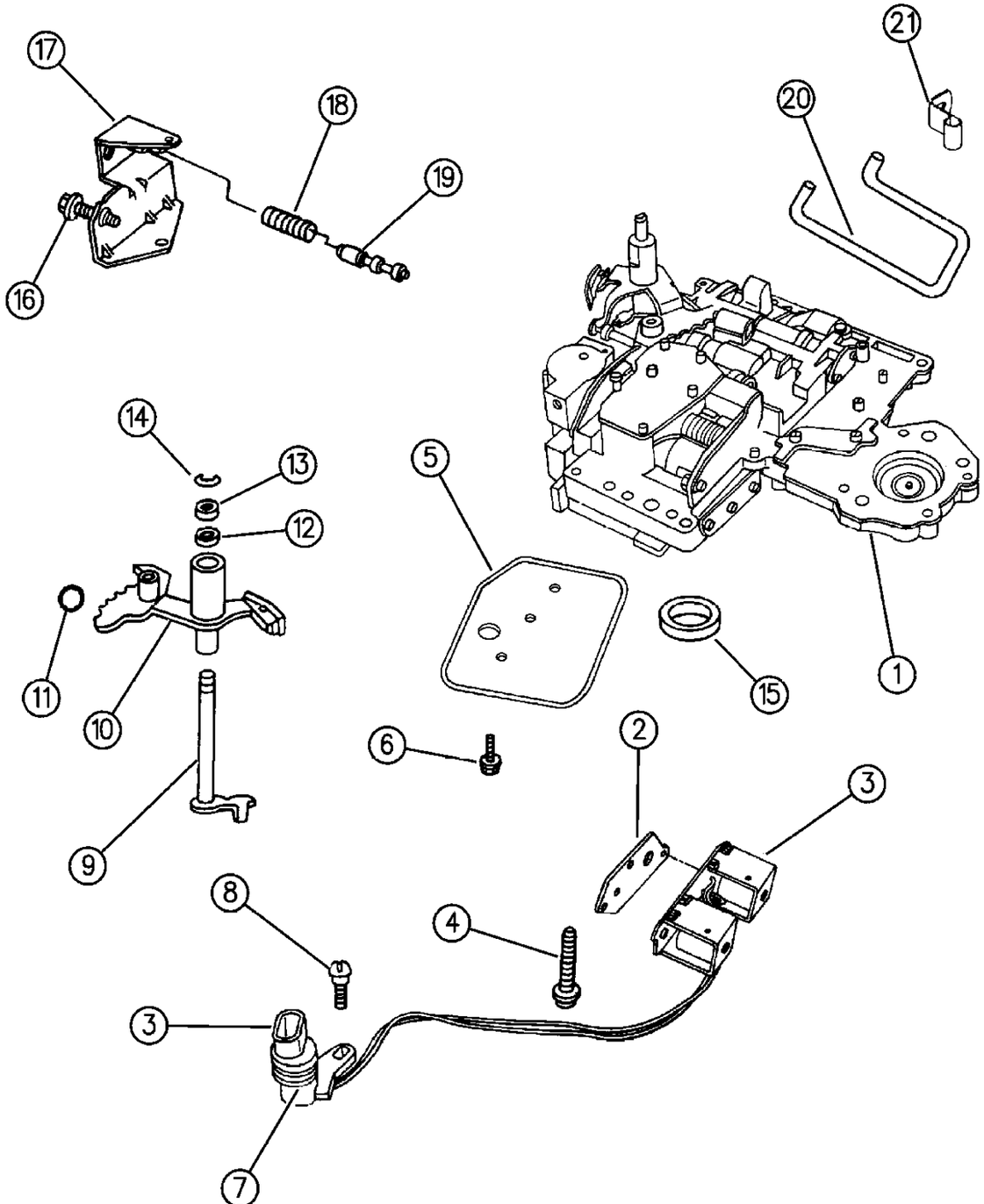

ITEM	PART NUMBER	QTY	BODY	MODEL	DESCRIPTION
	4746 115	1			GASKET and SEAL PACKAGE, Valve Body And Servo Recondition
					Consists Of:
					1 - 6028864 O-RING, K/Down Inner Piston
					1 - 6030657 O-RING
					1 - 3743010 SEAL RING, Accum. Piston, Small
					1 - 3743013 SEAL RING, Accum. Piston, Large
					1 - 4431958 SEAL RING, (Scarf Cut)
					1 - 3515996 FILTER, Trans. Oil
					1 - 6033448 O-RING, Solenoid Wiring Connection
					1 - 4446194 GASKET, Solenoid Assy.
					1 - 6024336 SNAP RING, K/Down Inner Piston
					1 - 4505098 SEAL, Manual Valve Lvr. Shaft
					1 - 2464324 GASKET, Oil Pan
					1 - 6031392 SNAP RING, K/Down Inner Piston
					2 - 1942123 RING, K/Down Servo Piston Lg.
					1 - 4431959 SEAL RING, (Scarf Cut)
					1 - 4412444 SEAL RING, K/Down Servo Piston, Small
					1 - 4058741 SEAL, Rev. Servo Piston
					1 - 4531233 SEAL, Rev. Servo Piston, 8.0L & Die. Eng.
					1 - 1626749 E-RING, Pk. Sprag Rod Swivel
1	5211 7915	1			VALVE BODY ASSEMBLY, w/Lock-Up Valve
2	4446 194	1			GASKET, Solenoid
3	4431 954	1			SOLENOID, Dual w/Wiring and 3 Prong Connector, w/Overdrive and w/Lock-Up Valve
4	0181 071	3			SCREW, Valve Body to Case, 1/4-20 x 1-3/4"
5	3515 996	1			FILTER, Trans. Oil
6	6033 826	3			SCREW, Oil Filter, 10-24 x 2-1/2"
7	6033 448	2			O-RING, Solenoid Wiring Connector
8	6033 985	1			SCREW, Solenoid Wiring Conn. Mtg.
9	3681 227	1			LEVER, Throttle Valve
10	4617 439	1			LEVER, w/Insulator, Manual Valve
11	0147 488	1			BALL, Manual Lever Detent, 11/32" Dia.
12	2466 548	1			SEAL, Throttle Lever Shaft, Rubber, 5/8" O.D.
13	2538 062	1			WASHER, Throttle Valve Lever Shaft
14	6025 857	1			E-RING, Throttle Valve Lever Shaft
15	4505 098	1			SEAL, Manual Valve, 1-1/4" O.D.
16	6030 609	1			SCREW, Throttle Pressure Adjusting
17	4617 010	1			BRACKET, Throttle Pressure Adj. Screw
18	4130 492	1			SPRING, Switch Valve
19	4505 036	1			VALVE, Trans. Lock-Up Switch
20	4617 008	1			TUBE, Boost Valve Oil Supply

MODEL CODES:

72=2 DR Wagon
74=4 DR Wagon
77=Open Body 93" Whlbase
78=Open Body 103" Whlbase - Export
T=2WD
J,N=4WD
U=4WD (RHD)

BODY STYLES:

YJ=Wrangler (4X4) "S"
Weangler (4X4) SE
Wrangler (4X4) Sahara
Wrangler (4X4) Renegade

XJ=Cherokee SE
Cherokee Sport
Cherokee Country

ZJ=Grand Cherokee SE
Grand Cherokee Laredo
Grand Cherolee Limited
ZG=Grand Cherokee European

Y1=Wrangler
X1=Cherokee
Z1=Grand Cherokee
KDX=Vehicles

AR = Use as Required - = Non Illustrated Part P.A.R. = Paint as Required

VALVE BODY AUTOMATIC TRANSMISSION, 4 SPEED, 46RH GRAND CHEROKEE ZJ
Figure 21D-710

21D-710

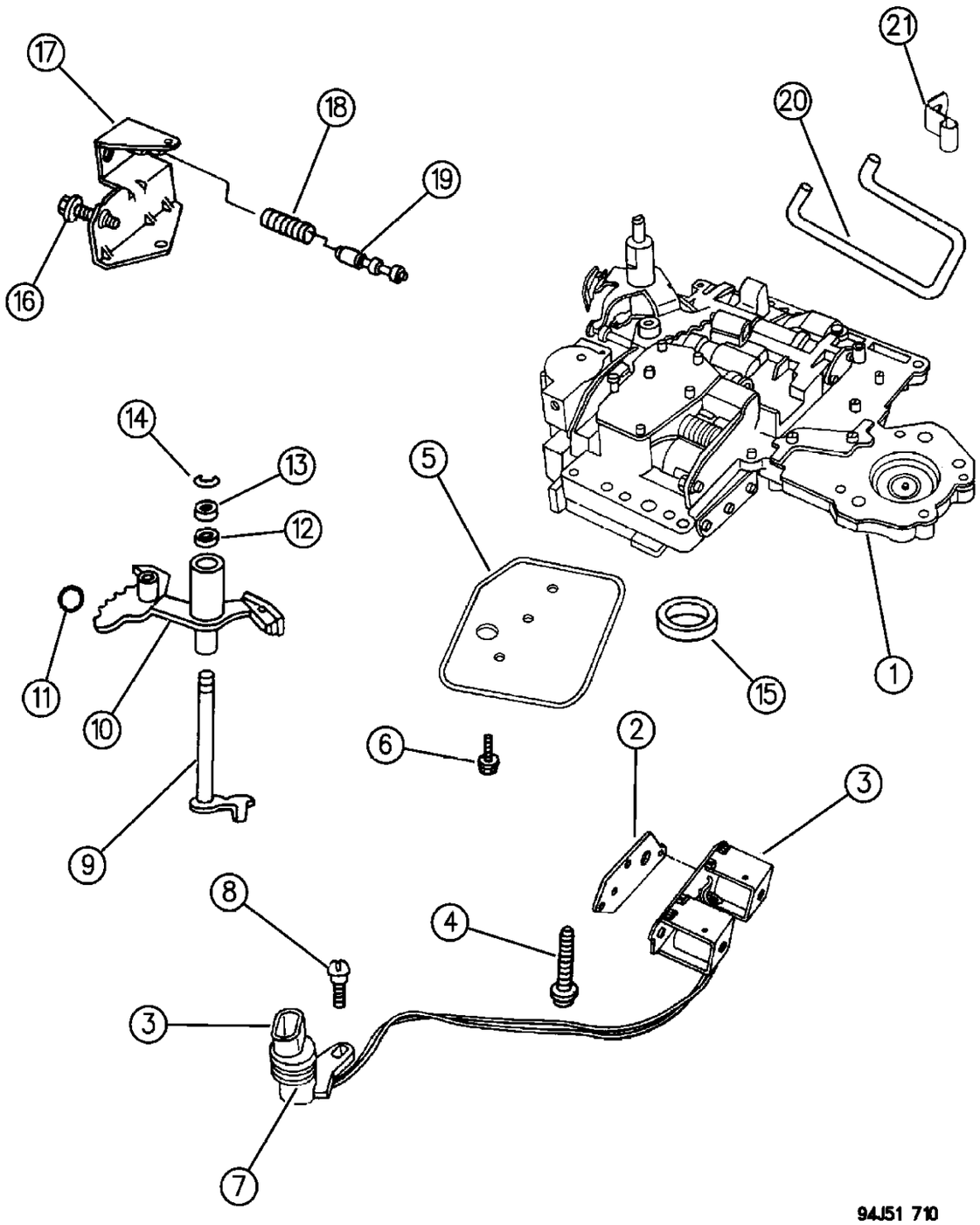

ITEM	PART NUMBER	QTY	BODY	MODEL	DESCRIPTION
21	5211 7958	1			RETAINER, Boost Valve Oil Supply Tube
	3878 313	1			SCREEN, Regulator Valve (Not Shown)

MODEL CODES:

72=2 DR Wagon	77=Open Body 93" Whlbase	T=2WD	U=4WD (RHD)
74=4 DR Wagon	78=Open Body 103" Whlbase - Export	J,N=4WD	

BODY STYLES:

YJ=Wrangler (4X4) "S"	XJ=Cherokee SE	ZJ=Grand Cherokee SE	Y1=Wrangler
Weangler (4X4) SE	Cherokee Sport	Grand Cherokee Laredo	X1=Cherokee
Wrangler (4X4) Sahara	Cherokee Country	Grand Cherolee Limited	Z1=Grand Cherokee
Wrangler (4X4) Renegade		ZG=Grand Cherokee European	KDX=Vehicles

AR = Use as Required - = Non Illustrated Part P.A.R. = Paint as Required

SERVOS, ACCUMULATOR PISTON AND SPRING AUTOMATIC TRANSMISSION, 4 SPEED, 46RH GRAND CHEROKEE ZJ
Figure 21D-720

21D-720

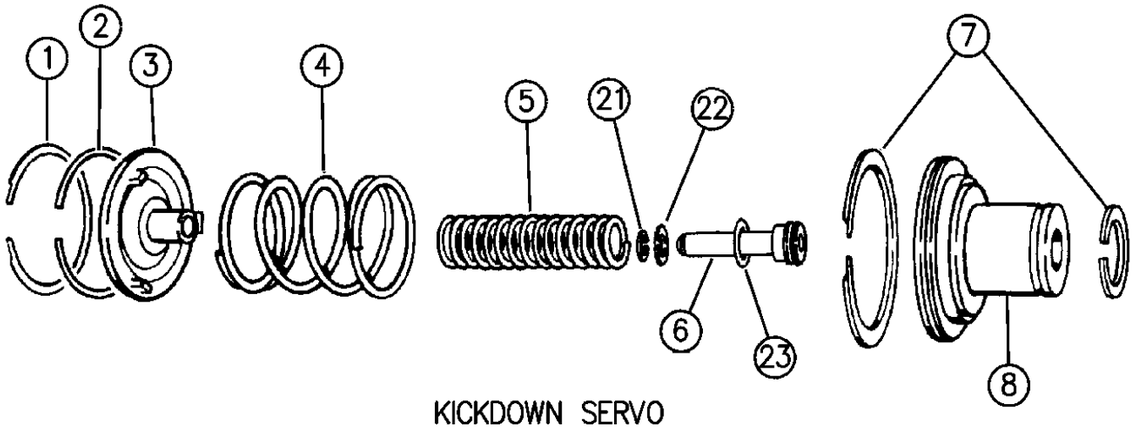

KICKDOWN SERVO

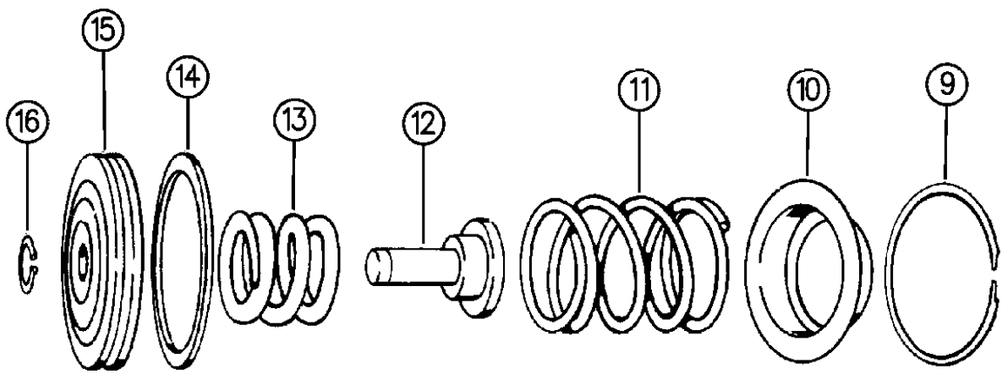

LOW AND REVERSE SERVO

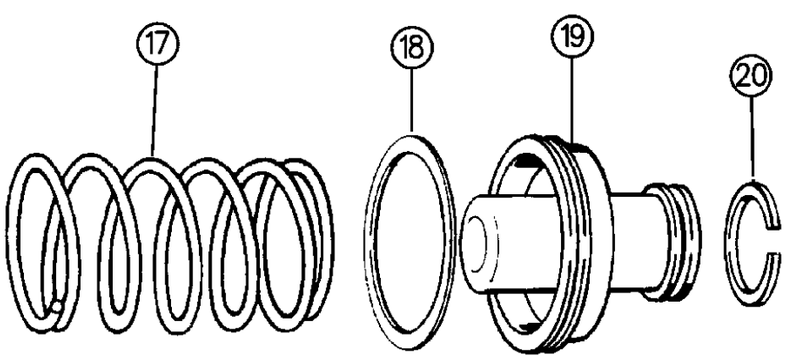

ACCUMULATOR PISTON AND SPRING

94J51 720

ITEM	PART NUMBER	QTY	BODY	MODEL	DESCRIPTION
1	1942 130	1			SNAP RING, Kickdown Servo Guide
2	1942 123	1			RING, Kickdown Servo Guide Seal
3	3410 441	1			GUIDE, Kickdown Servo
4	4617 528	1			SPRING, K/Down Servo Piston, Outer
5	3410 444	1			SPRING, K/Down Servo Piston, Inner, 6 Coils
6	3410 445	1			PISTON, K/Down Servo, Inner
7	1942 123	1			RING, K/Down Servo Piston Seal, Large
	4412 444	1			Small
8	3410 440	1			PISTON, K/Down Servo
9	1942 130	1			SNAP RING, Reverse Servo Piston Spring Retainer
10	1942 150	1			RETAINER, Reverse Servo Piston Spring
11	2801 241	1			SPRING, Reverse Servo Piston
12	3743 353	1			PLUG, Reverse Servo Piston, 1-53/64" Lgh.
13	4130 824	1			SPRING, Reverse Servo Cushion
14	4058 741	1			SEAL, Reverse Servo Piston, Rubber
15	2801 281	1			PISTON, Reverse Servo
16	6027 153	1			RING, Reverse Servo Piston Plug, 7/16" I.D.
17	3515 079	1			SPRING, Accumulator, Lower
18	3743 013	1			RING, Accumulator Piston Seal, Large
19	3743 650	1			PISTON, Accumulator
20	3743 010	1			RING, Accumulator Piston Seal, Small
21	6031 392	1			SNAP RING, Inner, 1-1/8" I.D.
22	3410 437	1			RETAINER, K/Down Piston Inner
23	6028 864	1			SEAL, Inner, 15/16 x 1-1/8" x3/32"

MODEL CODES:

72=2 DR Wagon
74=4 DR Wagon
77=Open Body 93" Whlbase
78=Open Body 103" Whlbase - Export
T=2WD
J,N=4WD
U=4WD (RHD)

BODY STYLES:

YJ=Wrangler (4X4) "S"
Weangler (4X4) SE
Wrangler (4X4) Sahara
Wrangler (4X4) Renegade
XJ=Cherokee SE
Cherokee Sport
Cherokee Country
ZJ=Grand Cherokee SE
Grand Cherokee Laredo
Grand Cherolee Limited
ZG=Grand Cherokee European
Y1=Wrangler
X1=Cherokee
Z1=Grand Cherokee
KDX=Vehicles

AR = Use as Required - = Non Illustrated Part P.A.R. = Paint as Required

« RETURN TO GROUP INDEX

PARKING SPRAG AUTOMATIC TRANSMISSION, 4 SPEED, 46RH GRAND CHEROKEE ZJ
Figure 21D-730

21D-730

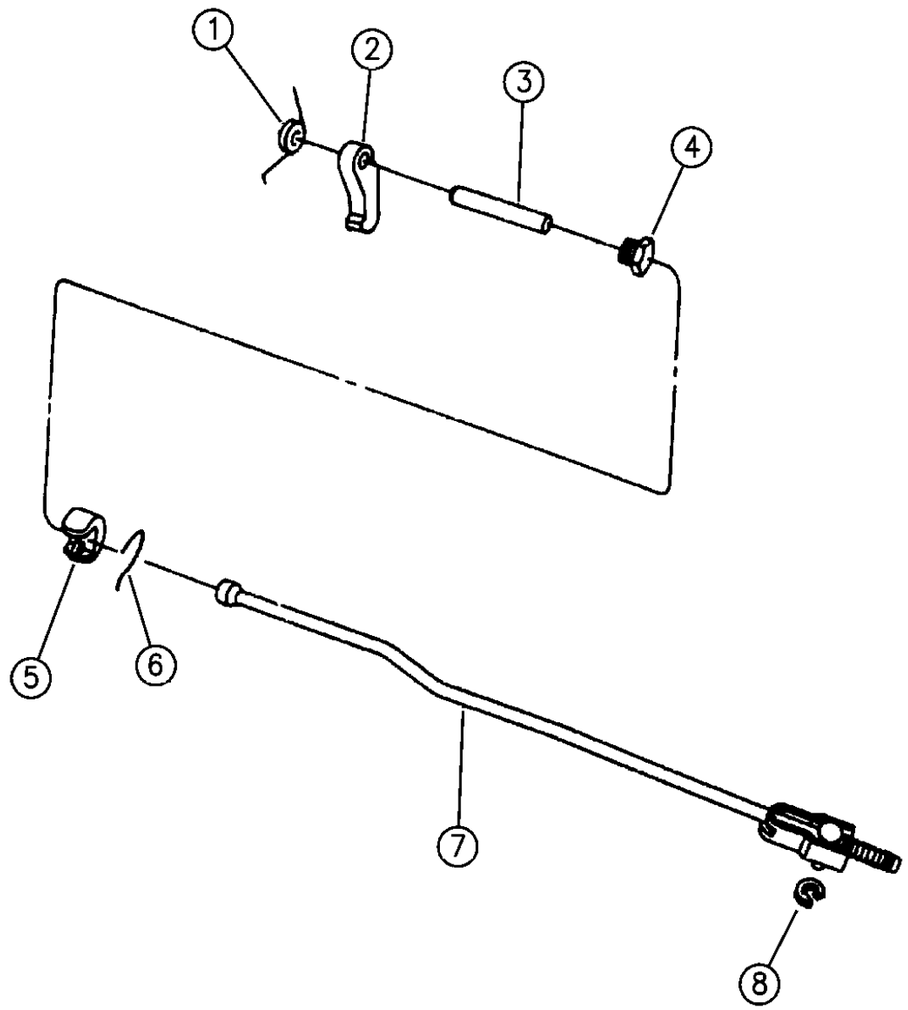

94J51 730

ITEM	PART NUMBER	QTY	BODY	MODEL	DESCRIPTION
1	2466 909	1			SPRING, Parking Sprag
2	4471 415	1			SPRAG, Parking (5/8" Thick) ***
3	2466 892	1			SHAFT, Parking Sprag
4	1798 191	1			PLUG, Shaft Retaining
5	2538 042	1			PLUG, Parking Sprag Reaction
6	2538 034	1			SNAP RING, Reaction Plug
7	4471 478	1			ROD ASSEMBLY, Parking Sprag
8	1626 749	1			E-CLIP, Rod ***

MODEL CODES:

72=2 DR Wagon
74=4 DR Wagon
77=Open Body 93" Whlbase
78=Open Body 103" Whlbase - Export
T=2WD
J,N=4WD
U=4WD (RHD)

BODY STYLES:

YJ=Wrangler (4X4) "S"
Weangler (4X4) SE
Wrangler (4X4) Sahara
Wrangler (4X4) Renegade
XJ=Cherokee SE
Cherokee Sport
Cherokee Country
ZJ=Grand Cherokee SE
Grand Cherokee Laredo
Grand Cherolee Limited
ZG=Grand Cherokee European
Y1=Wrangler
X1=Cherokee
Z1=Grand Cherokee
KDX=Vehicles

AR = Use as Required - = Non Illustrated Part P.A.R. = Paint as Required

« RETURN TO GROUP INDEX

CLUTCH, OVERDRIVE WITH GEAR TRAIN AUTOMATIC TRANSMISSION, 4 SPEED, 46RH GRAND CHEROKEE ZJ
Figure 21D-1010

21D-1010

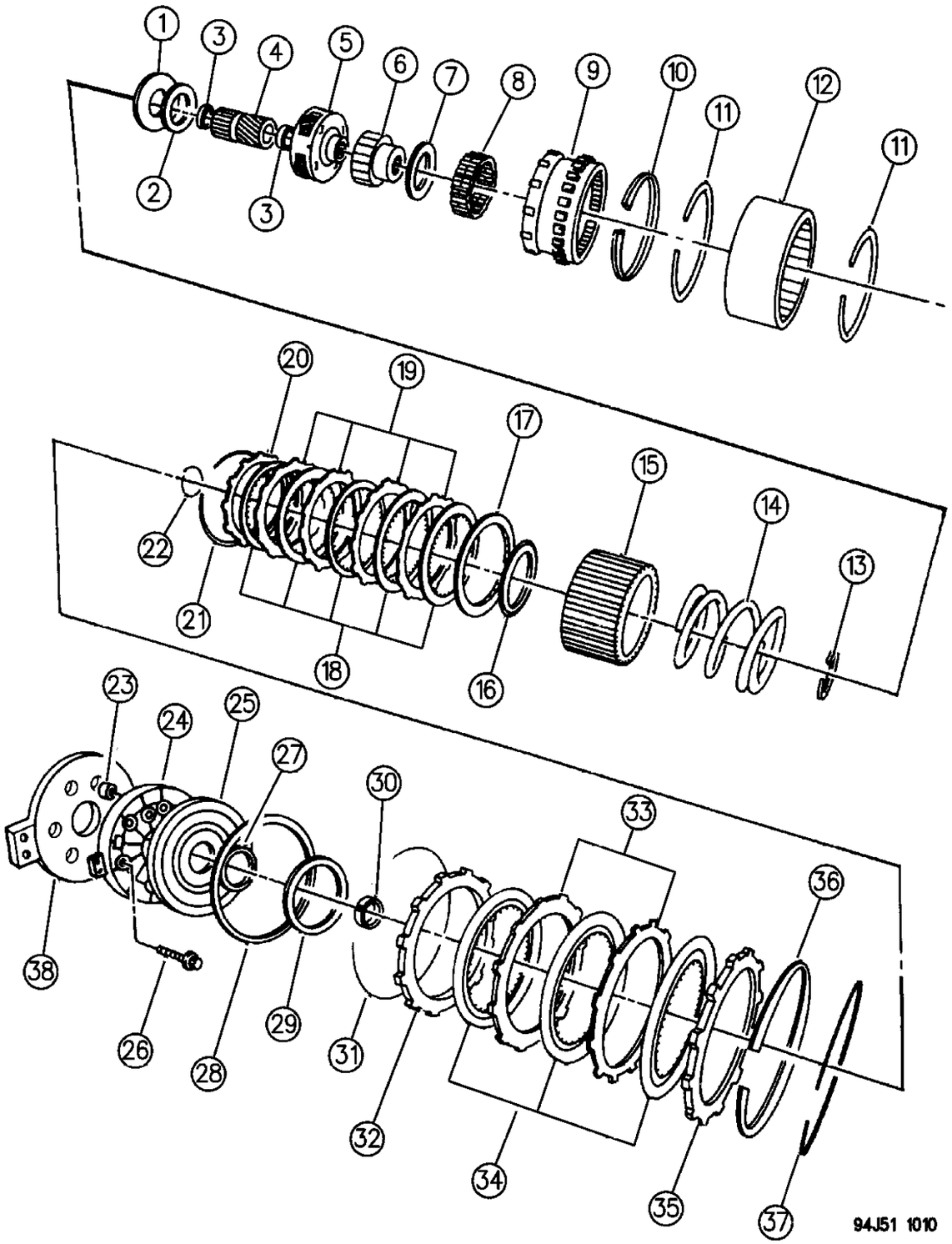

ITEM	PART NUMBER	QTY	BODY	MODEL	DESCRIPTION
1	4740 774	1			PLATE PACKAGE, w/Bearing, Direct Clutch Spring, Thrust ***
2		1			BEARING, O/Drive, Thrust (Serviced in 4740774 Plate Pkg.)
3		2			BUSHING, O/Drive Sun Gear (Serv. in Sun Gear)
4	4461 022	1			GEAR, O/Drive Sun
5	4461 118	1			CARRIER ASSEMBLY, O/Drive Planet Pinion (4 Pinion)
6	4461 124	1			RACE, O/Drive "O" Running Clutch
7	4461 014	1			BEARING, O/Drive Race, Thrust
8	4461 015	1			CLUTCH ASSEMBLY, w/Rollers and Springs, O/Drive "O" Running
9	4746 349	1			GEAR, O/Drive Annulus
10	4461 059	1			SNAP RING, O/Drive Annulus Gear, 5-1/4" O.D.
11	4461 060	2			SNAP RING, Direct Clutch Drum to Annulus, 6" O.D.
12	4461 089	1			DRUM, Direct Clutch
13	4461 063	1			SNAP RING, Direct Clutch Spring Plate, 2-3/16" O.D.
14	4461 027	1			SPRING, Direct Clutch Coil
15	4461 072	1			HUB, Direct Clutch Spring Sliding
16	4446 724	1			BEARING, O/Drive Clutch Piston, Thrust
17	4461 030	1			PLATE, Direct Clutch Pressure
18	4461 042	8			DISC, Direct Clutch
19	4461 054	7			PLATE, Direct Clutch
20	4461 031	1			PLATE, Direct Clutch Reaction
21	4461 032	1			SPRING, Direct Clutch Wave
22	4461 064	1			SNAP RING, Direct Clutch Spring Sliding Hub, Round 1-7/8" O.D.
23	4412 583	1			FILTER, Piston Retainer
24	5211 8180	1			RETAINER, O/Drive Clutch Piston
25	4431 695	1			PISTON, O/Drive Clutch
26	6033 479	6			SCREW, Retainer to Case, 1/4-28 x 1-5/8"
27	4431 697	1			SEAL, O/Drive Clutch Piston, Inner
28	4431 696	1			SEAL, O/Drive Clutch Piston, Outer
29					PLATE, O/Drive Clutch Piston, Selective Thrust, 3.10" Dia. I.D.
	4431 730	AR			.108 - .110" Thk.
	4431 585	AR			.123 - .125" Thk.
	4431 731	AR			.138 - .140" Thk.
	4431 586	AR			.153 - .155" Thk.
	4431 732	AR			.168 - .170" Thk.
	4431 587	AR			.183 - .185" Thk.
	4431 733	AR			.198 - .200" Thk.
	4431 588	AR			.213 - .215" Thk.
	4431 734	AR			.228 - .230" Thk.
	4431 590	AR			.243 - .245" Thk.
30					SPACER, Intermediate Shaft, 1.15" I.D., Selective
	4431 916	AR			.158" Thk.

MODEL CODES:

72=2 DR Wagon
74=4 DR Wagon
77=Open Body 93" Whlbase
78=Open Body 103" Whlbase - Export
T=2WD
J,N=4WD
U=4WD (RHD)

BODY STYLES:

YJ=Wrangler (4X4) "S"
Weangler (4X4) SE
Wrangler (4X4) Sahara
Wrangler (4X4) Renegade
XJ=Cherokee SE
Cherokee Sport
Cherokee Country
ZJ=Grand Cherokee SE
Grand Cherokee Laredo
Grand Cherolee Limited
ZG=Grand Cherokee European
Y1=Wrangler
X1=Cherokee
Z1=Grand Cherokee
KDX=Vehicles

AR = Use as Required - = Non Illustrated Part P.A.R. = Paint as Required

CLUTCH, OVERDRIVE WITH GEAR TRAIN AUTOMATIC TRANSMISSION, 4 SPEED, 46RH GRAND CHEROKEE ZJ
Figure 21D-1010

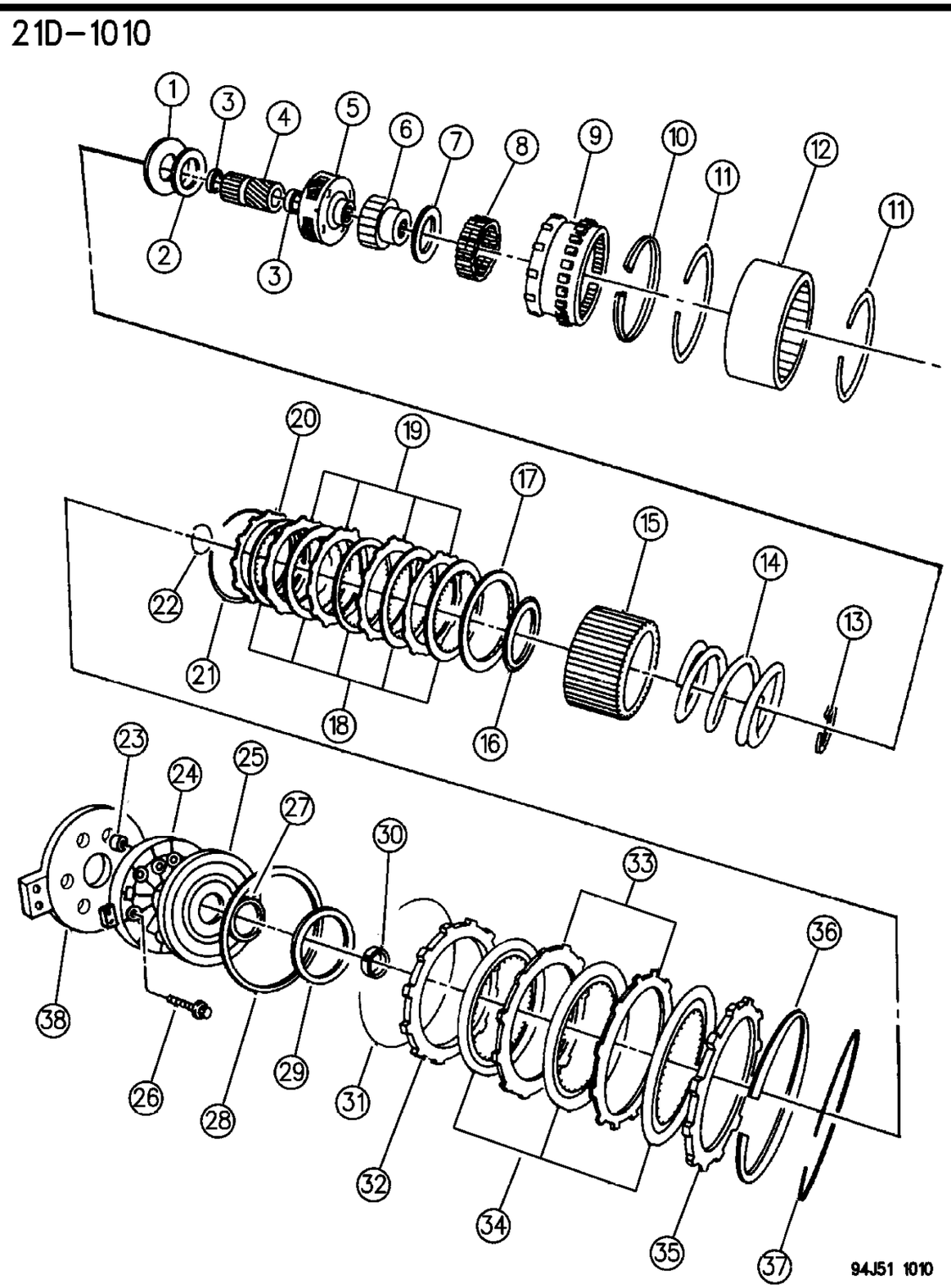

ITEM	PART NUMBER	QTY	BODY	MODEL	DESCRIPTION
	4431 917	AR			.175" Thk.
	4431 918	AR			.193" Thk.
	4431 919	AR			.211" Thk.
31	4461 082	1			SNAP RING, O/Drive Clutch Pressure Plate, Round
32	4461 033	1			PLATE, O/Drive Clutch Pressure
33	4461 047	3			PLATE, O/Drive Clutch Separator
34	4461 181	4			DISC, O/Drive Clutch
35	4461 033	1			PLATE, O/Drive Clutch Reaction
36	4461 066	1			SPRING, O/Drive Clutch Wave
37	4461 065	1			SNAP RING, O/Drive Clutch Reaction Plate, 6-1/2" O.D.
38	4471 565	1			GASKET, O/Drive Cl. Piston Retainer & Ext. Adapter to Case

MODEL CODES:

72=2 DR Wagon
74=4 DR Wagon
77=Open Body 93" Whlbase
78=Open Body 103" Whlbase - Export
T=2WD
J,N=4WD
U=4WD (RHD)

BODY STYLES:

YJ=Wrangler (4X4) "S"
Weangler (4X4) SE
Wrangler (4X4) Sahara
Wrangler (4X4) Renegade

XJ=Cherokee SE
Cherokee Sport
Cherokee Country

ZJ=Grand Cherokee SE
Grand Cherokee Laredo
Grand Cherolee Limited
ZG=Grand Cherokee European

Y1=Wrangler
X1=Cherokee
Z1=Grand Cherokee
KDX=Vehicles

AR = Use as Required - = Non Illustrated Part P.A.R. = Paint as Required

CONTROLS, GEARSHIFT, FLOOR MOUNTED AUTOMATIC TRANSMISSION, 4 SPEED, 46RH GRAND CHEROKEE
Figure 21D-1210

21D-1210

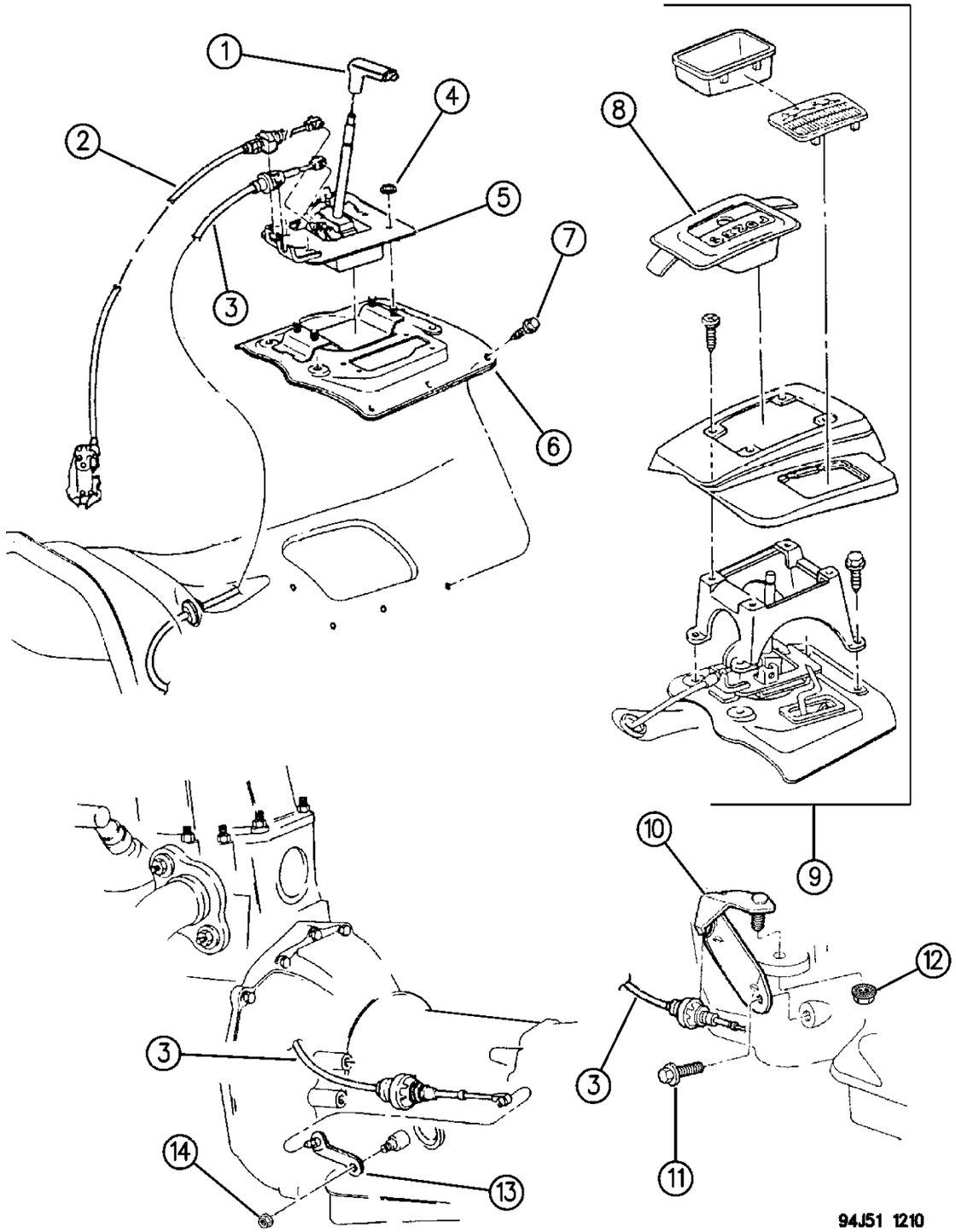

ITEM	PART NUMBER	QTY	BODY	MODEL	DESCRIPTION
1	5300 7750	1			HANDLE, Trans. Gearshift
2	5207 7992	1			CABLE ASSEMBLY, Park Interlock
	5207 8959	1	ZG		1996
	5207 8961	1	ZJ		1996
3	5207 9230	1			CABLE ASSEMBLY, Trans. Gearshift
	5300 8656	1			GROMMET, Gearshift Cable
4	6101 695	4			NUT, Shifter Hsg. Mounting
5	5207 8384	1			HOUSING and LEVER, Assy., Gearshift ***
	5305 4278	1	ZG		RHD 1996 ***
	5300 3350	1			SPRING, Pawl Return (Not Shown)
6					COVER, Floor Shift Mtg.
	5300 7541	1			4x4
	5300 7349	1			4x2
7		10			SCREW, w/Washer (Not Serviced)
8	5511 5065	1			BEZEL, Floor Console
9					CONSOLE, Mini (Reference See Group 8A-440)
10	5207 8875	1			BRACKET, Shift Cable Mounting
11		1			SCREW, Shift Cable Mtg. Brkt., 5/16-18 x 3/4" (Not Serviced)
12	0152 476	1			NUT, Cable Brkt. Mtg., 7/16-14
13	5207 8253	1			LEVER, Manual Valve Shaft Shift
14	J420 0046	1			NUT, Lever M8x1.25

MODEL CODES:

72=2 DR Wagon
74=4 DR Wagon
77=Open Body 93" Whlbase
78=Open Body 103" Whlbase - Export
T=2WD
J,N=4WD
U=4WD (RHD)

BODY STYLES:

YJ=Wrangler (4X4) "S"
Weangler (4X4) SE
Wrangler (4X4) Sahara
Wrangler (4X4) Renegade
XJ=Cherokee SE
Cherokee Sport
Cherokee Country
ZJ=Grand Cherokee SE
Grand Cherokee Laredo
Grand Cherolee Limited
ZG=Grand Cherokee European
Y1=Wrangler
X1=Cherokee
Z1=Grand Cherokee
KDX=Vehicles

AR = Use as Required - = Non Illustrated Part P.A.R. = Paint as Required

« RETURN TO GROUP INDEX

SAGIPARTS

GROUP-22
WHEELS, COVERS & JACKS

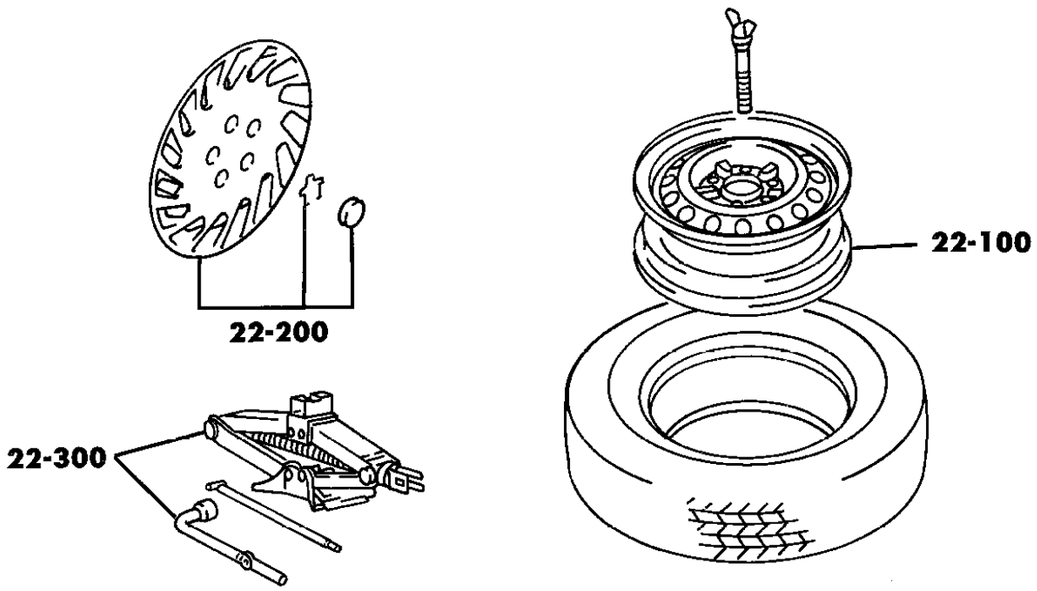

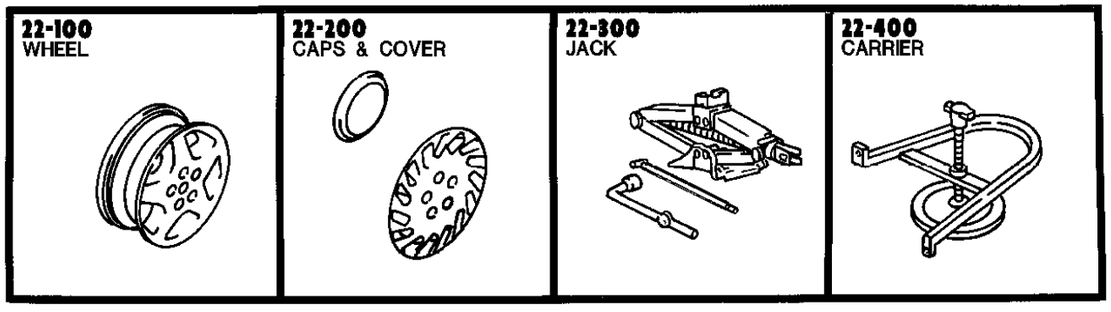

GROUP 22 - WHEELS-COVERS & JACKS

ILLUSTRATION TITLE	GROUP-FIG. NO.
WHEELS AND HARDWARE	
WHEELS AND HARDWARE YJ BODY	Fig. 22-110
WHEELS AND HARDWARE XJ BODY	Fig. 22-120
WHEELS AND HARDWARE ZJ, ZG BODY	Fig. 22-130
CAPS, WHEEL COVER, CENTER	
CAPS, WHEEL COVER, CENTER YJ BODY	Fig. 22-210
CAPS, WHEEL COVER, CENTER XJ BODY	Fig. 22-220
CAPS, WHEEL COVER, CENTER ZJ, ZG BODY	Fig. 22-230
JACK STOWAGE	
JACK STOWAGE YJ BODY	Fig. 22-310
JACK STOWAGE XJ BODY	Fig. 22-320
JACK STOWAGE ZJ, ZG BODY	Fig. 22-330
WHEEL, SPARE INSIDE AND OUTSIDE	
WHEEL, SPARE TAILGATE MOUNTING YJ BODY	Fig. 22-410
WHEEL, SPARE TAILGATE MOUNTING YJ BODY KDX	Fig. 22-420
WHEEL, SPARE INSIDE MOUNTING XJ BODY	Fig. 22-430
WHEEL, SPARE INSIDE MOUNTING XJ BODY RHD	Fig. 22-440
WHEEL, SPARE OUTSIDE MOUNTING, SWING AWAY XJ BODY	Fig. 22-450
WHEEL, SPARE INSIDE MOUNTING ZJ, ZG BODY	Fig. 22-460

WHEELS AND HARDWARE YJ BODY
Figure 22-110

22-110

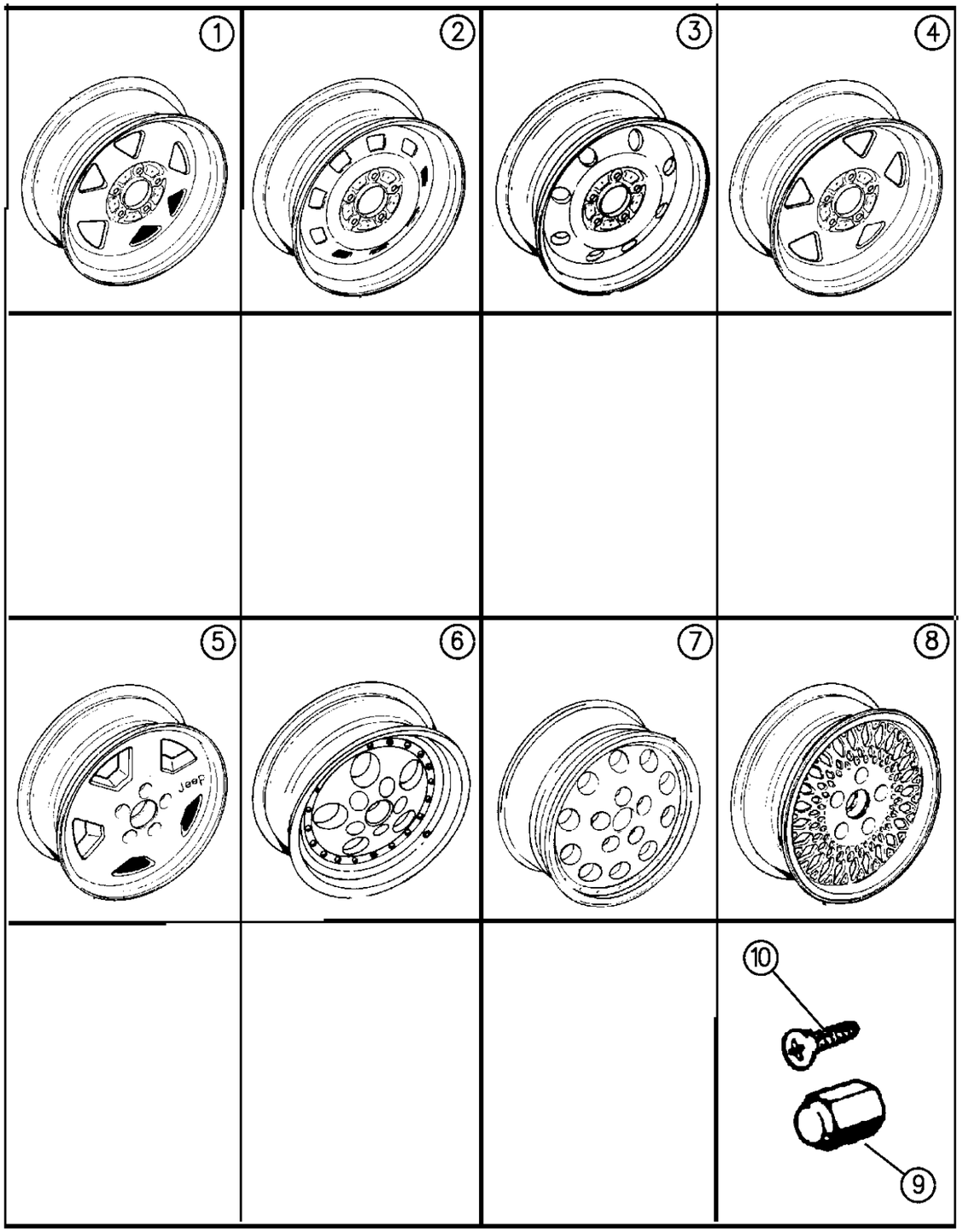

ITEM	PART NUMBER	QTY	BODY	MODEL	DESCRIPTION
1	5CF7 2L4A	4			WHEEL, 15x7 Styled Steel, Argent (WJD)
2	5200 0022	4			WHEEL, 15x6 Steel, Silver (WJK+TBC)
3	5200 4765	4			WHEEL, 16x6 Steel, KDX, Egypt (WDJ)
4					WHEEL, 15x7 Steel, Argent (WJ5+TBB)
	5DS2 2M4A	4			1994
	5FV6 3S4A	4			1995
5	5200 3368	4			WHEEL, 15x7 Aluminum (WJN)
6	5200 7398	4			WHEEL, 15x8 Aluminum (WJ9)
7					WHEEL, 15x7 Aluminum (WJH)
	5205 8015	4			1994
	5209 0000	4			1995
8					WHEEL, 15x7 Aluminum
	5DH5 9MS7	4			Dark Silver Metallic (WJG)
	4637 977	4			Black (WJR+WJ7)
	4637 978	4			Gold Metallic (WJR+WJ7)
9	J400 6956	AR			NUT, w/Cap, Wheel Lug
10	3420 2523	AR			SCREW, Cap Retaining

MODEL CODES:

72=2 DR Wagon
74=4 DR Wagon
77=Open Body 93" Whlbase
78=Open Body 103" Whlbase - Export
T=2WD
J,N=4WD
U=4WD (RHD)

BODY STYLES:

YJ=Wrangler (4X4) "S"
Weangler (4X4) SE
Wrangler (4X4) Sahara
Wrangler (4X4) Renegade
XJ=Cherokee SE
Cherokee Sport
Cherokee Country
ZJ=Grand Cherokee SE
Grand Cherokee Laredo
Grand Cherolee Limited
ZG=Grand Cherokee European
Y1=Wrangler
X1=Cherokee
Z1=Grand Cherokee
KDX=Vehicles

AR = Use as Required - = Non Illustrated Part P.A.R. = Paint as Required

« RETURN TO GROUP INDEX

WHEELS AND HARDWARE XJ BODY
Figure 22-120

22-120A

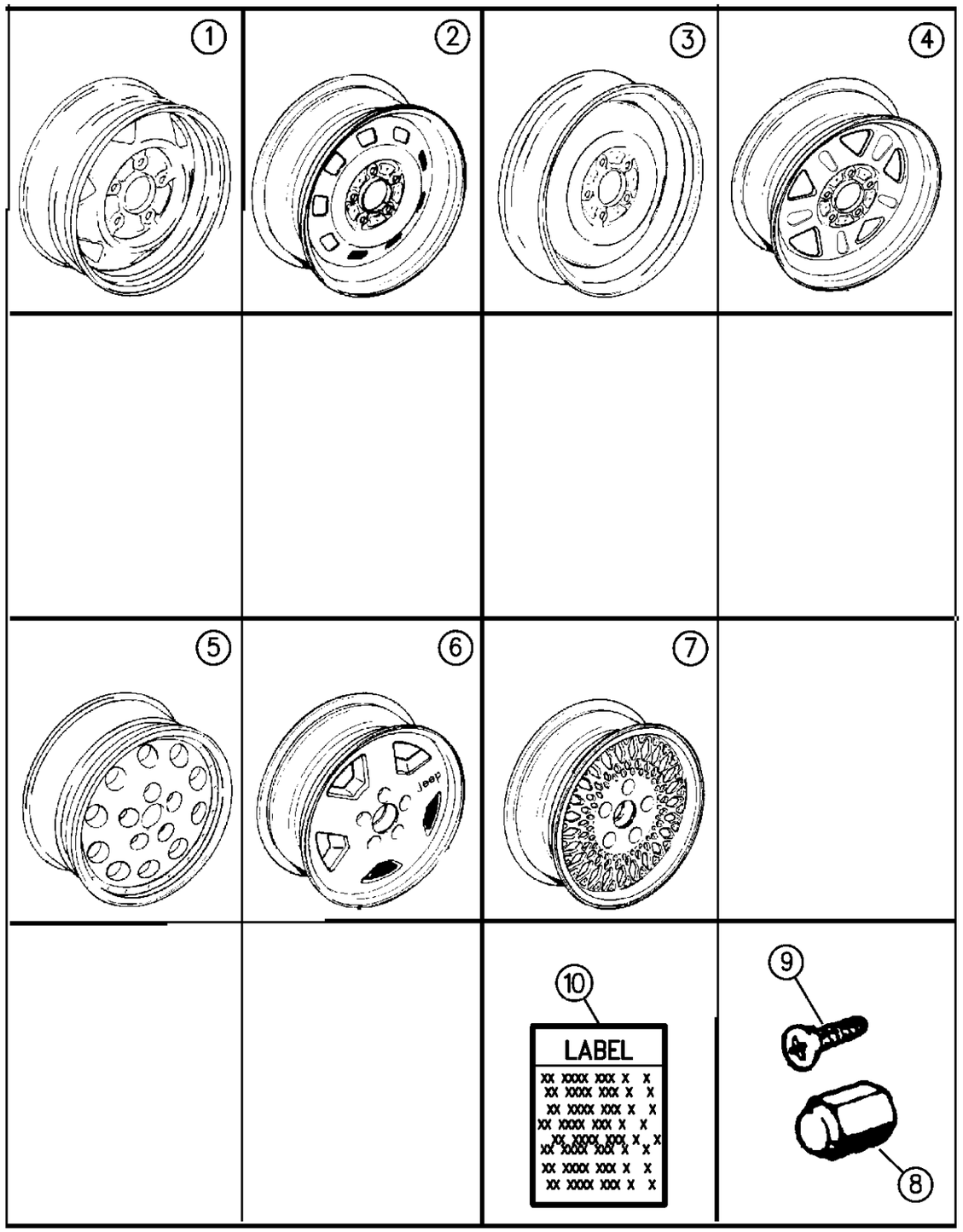

ITEM	PART NUMBER	QTY	BODY	MODEL	DESCRIPTION
1	5CF7 2L4A	4			WHEEL, 15x7.0 Styled Steel, Argent, (WJD)
2	5200 0022	4			WHEEL, 15x6.0 Steel, Silver, (WJK), KDX
3	5200 0019	1			WHEEL, Compact Spare, (16x4.0)
4	5CM1 0M4A	4			WHEEL, 15x7.0 Steel, Argent, Full Face, 5 Spoke, w/5 Elongated Dimples on The Spokes, (WJ5)
5					WHEEL, 15x7.0 Aluminum, (WJH)
	5205 8015	4			Up To 12-16-93
	5209 0000	4			After 12-16-93
	5DR1 9TA8	4			WHEEL, 15x7.0 Aluminum (WJ3)
6	5200 3368	4			WHEEL, 15x7.0 Aluminum, (WJN), KDX
7					WHEEL, 15x7.0 Aluminum, Machined-Face, Lattice
	4637 977	4			Black, (WJR,WJ7)
	4637 978	4			Gold Metallic, (WJR, WJ7)
	5DH5 9MS7	4			Dark Silver Metallic, (WJG)
	5DH5 9MV4	4			Light Champagne, (WJ1), 1994
	5DH5 9RV1	4			Light Pearlstone (WJ1)
8	J400 6956	AR			NUT, w/Cap, Wheel Lug
9	3420 2523	AR			SCREW, Wheel Cap Retaining
10		1			LABEL, Tire Pressure (DNS 52088204)

MODEL CODES:

72=2 DR Wagon
74=4 DR Wagon
77=Open Body 93" Whlbase
78=Open Body 103" Whlbase - Export
T=2WD
J,N=4WD
U=4WD (RHD)

BODY STYLES:

YJ=Wrangler (4X4) "S"
Weangler (4X4) SE
Wrangler (4X4) Sahara
Wrangler (4X4) Renegade

XJ=Cherokee SE
Cherokee Sport
Cherokee Country

ZJ=Grand Cherokee SE
Grand Cherokee Laredo
Grand Cherolee Limited
ZG=Grand Cherokee European

Y1=Wrangler
X1=Cherokee
Z1=Grand Cherokee
KDX=Vehicles

AR = Use as Required - = Non Illustrated Part P.A.R. = Paint as Required

WHEELS AND HARDWARE ZJ, ZG BODY
Figure 22-130

22-130C

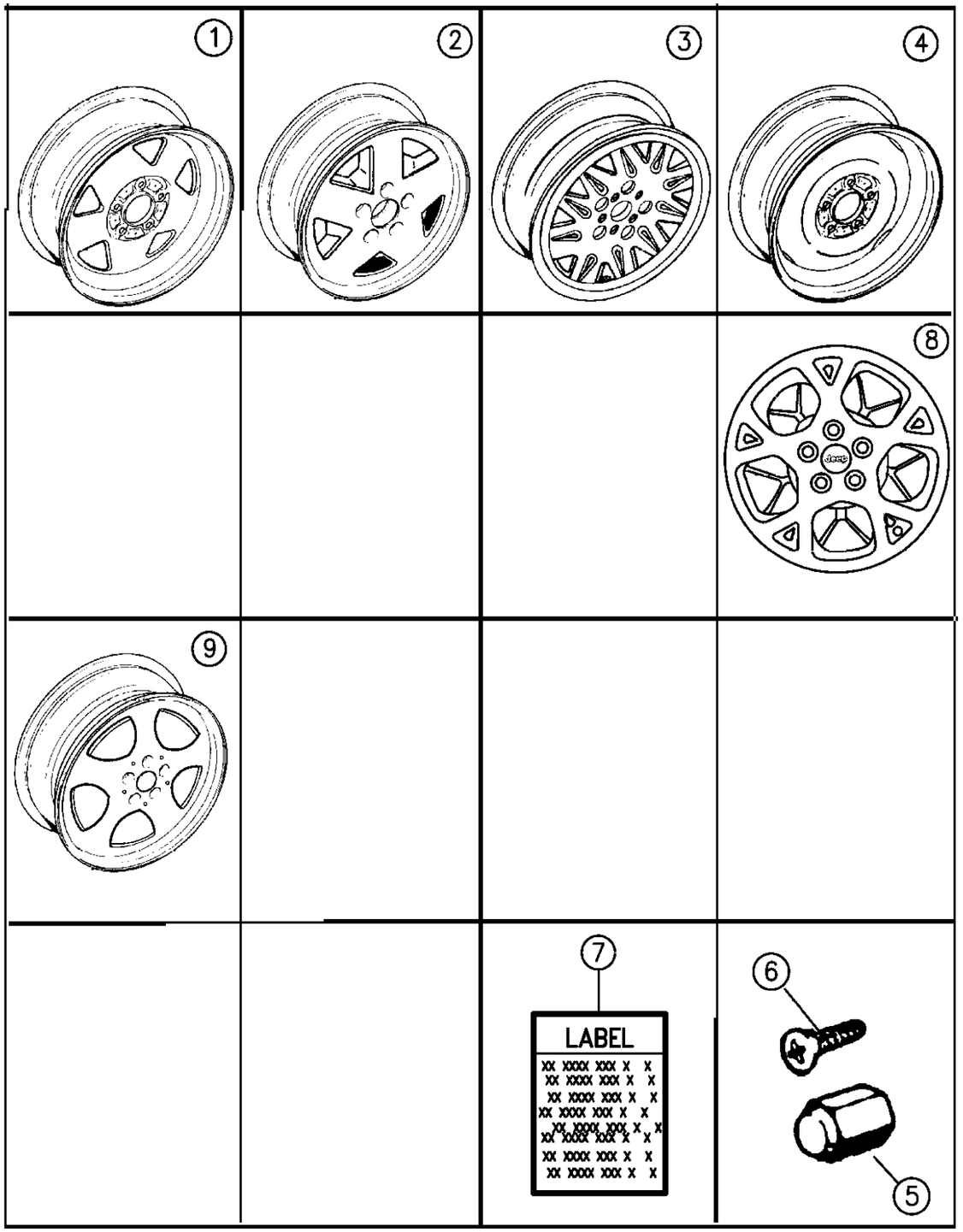

ITEM	PART NUMBER	QTY	BODY	MODEL	DESCRIPTION
1	5DS2 2M4A	4			WHEEL, 15x7 Steel Full Face, Argent, 5 Spoke, WJ 5
2	5DR2 4MD2	4			WHEEL, 15x7.0 Sport Cast Aluminum, Med. Quartz, 5 Spoke WJ6, 1994-95
3					WHEEL, 15x7.0 Luxury Cast Aluminum, WJ7
	5DR2 5MY2	4			Gold Metallic
	5DR2 5RJN	4			Moss Green
4	5200 0019	1			WHEEL, 16x4.0 Compact Spare
5	J400 6956	AR			NUT, w/Cap, Wheel Lug
6	3420 2523	AR			SCREW, Wheel Cap Retaining
7					LABEL, Tire Pressure
	5208 9003	1			1995
	5208 8505	1			1996
	5208 8315	1	ZG		1996 w/o Australia Pkg. ***
	5305 4517	1	ZG		1996 w/215/75 R15 Tire, w/Australia Pkg. ***
	5305 4516	1	ZG		1996 w/225/70 R16 Tire, w/Australia Pkg. ***
8					WHEEL, 16x7 JJ Cast Aluminum, 1996
	5DV3 3SYN	4			Gold, WDM
	5DV3 3SAK	4			Silver, WDR
	5DV3 3SJN	4			Green, WDN
9					WHEEL, 15x7 JJ Cast Aluminum, 1996
	5FA1 5SYN	4			Gold, WJ1
	5FA1 5SS7	4			Silver, WJ6
	2073 355	4			STEM, Valve 11/2"

MODEL CODES:

72=2 DR Wagon
74=4 DR Wagon
77=Open Body 93" Whlbase
78=Open Body 103" Whlbase - Export
T=2WD
J,N=4WD
U=4WD (RHD)

BODY STYLES:

YJ=Wrangler (4X4) "S"
Weangler (4X4) SE
Wrangler (4X4) Sahara
Wrangler (4X4) Renegade
XJ=Cherokee SE
Cherokee Sport
Cherokee Country
ZJ=Grand Cherokee SE
Grand Cherokee Laredo
Grand Cherolee Limited
ZG=Grand Cherokee European
Y1=Wrangler
X1=Cherokee
Z1=Grand Cherokee
KDX=Vehicles

AR = Use as Required - = Non Illustrated Part P.A.R. = Paint as Required

CAPS, WHEEL COVER, CENTER YJ BODY
Figure 22-210

22-210A

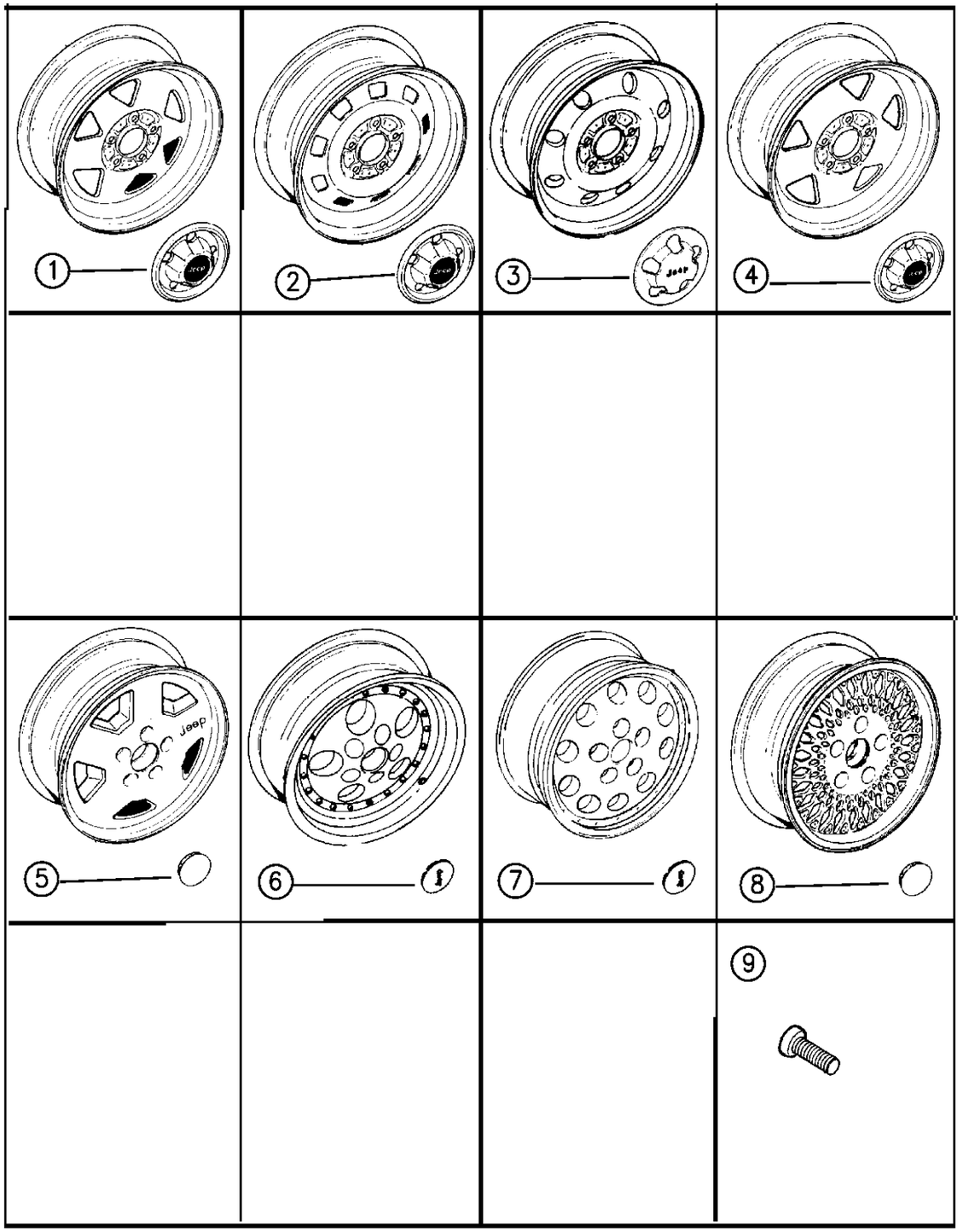

ITEM	PART NUMBER	QTY	BODY	MODEL	DESCRIPTION
1	5200 1179	4			CAP, Hub w/Applique, Black w/Jeep Logo Written In White, Used w/(WJD) Wheel
2	5200 1179	4			CAP, Hub w/Applique, Black w/Jeep Logo Written In White, Used w/(WJK) Wheel
3	5200 4766	4			CAP, Hub w/Applique, Used w/(WDJ) Wheel, KDX
4	5CF3 4L4A	4			CAP, Hub w/Jeep Logo, Argent (P.A.R.), Center Black, Used w/(WJ5) Wheel
5	5200 2971	4			CAP, Hub Bright, Used w/(WJN) Wheel
6	5200 3759	4			CAP, Hub w/Jeep Logo Written in Silver, Used w/(WJ9) Wheel
7	5200 3759	4			CAP, Hub w/Jeep Logo Written in Silver, Used w/(WJH) Wheel
8					CAP, Hub
	5200 2971	4			Bright, Used w/(WJG) Wheel
	5200 3621	4			Black, w/Jeep Logo Written in Gold, Used w/(WJ7) Wheel
9	3420 2523	12			SCREW, Center Cap to Wheel

MODEL CODES:

72=2 DR Wagon
74=4 DR Wagon
77=Open Body 93" Whlbase
78=Open Body 103" Whlbase - Export
T=2WD
J,N=4WD
U=4WD (RHD)

BODY STYLES:

YJ=Wrangler (4X4) "S"
Weangler (4X4) SE
Wrangler (4X4) Sahara
Wrangler (4X4) Renegade
XJ=Cherokee SE
Cherokee Sport
Cherokee Country
ZJ=Grand Cherokee SE
Grand Cherokee Laredo
Grand Cherolee Limited
ZG=Grand Cherokee European
Y1=Wrangler
X1=Cherokee
Z1=Grand Cherokee
KDX=Vehicles

AR = Use as Required - = Non Illustrated Part P.A.R. = Paint as Required

« RETURN TO GROUP INDEX

CAPS, WHEEL COVER, CENTER XJ BODY
Figure 22-220

22-220A

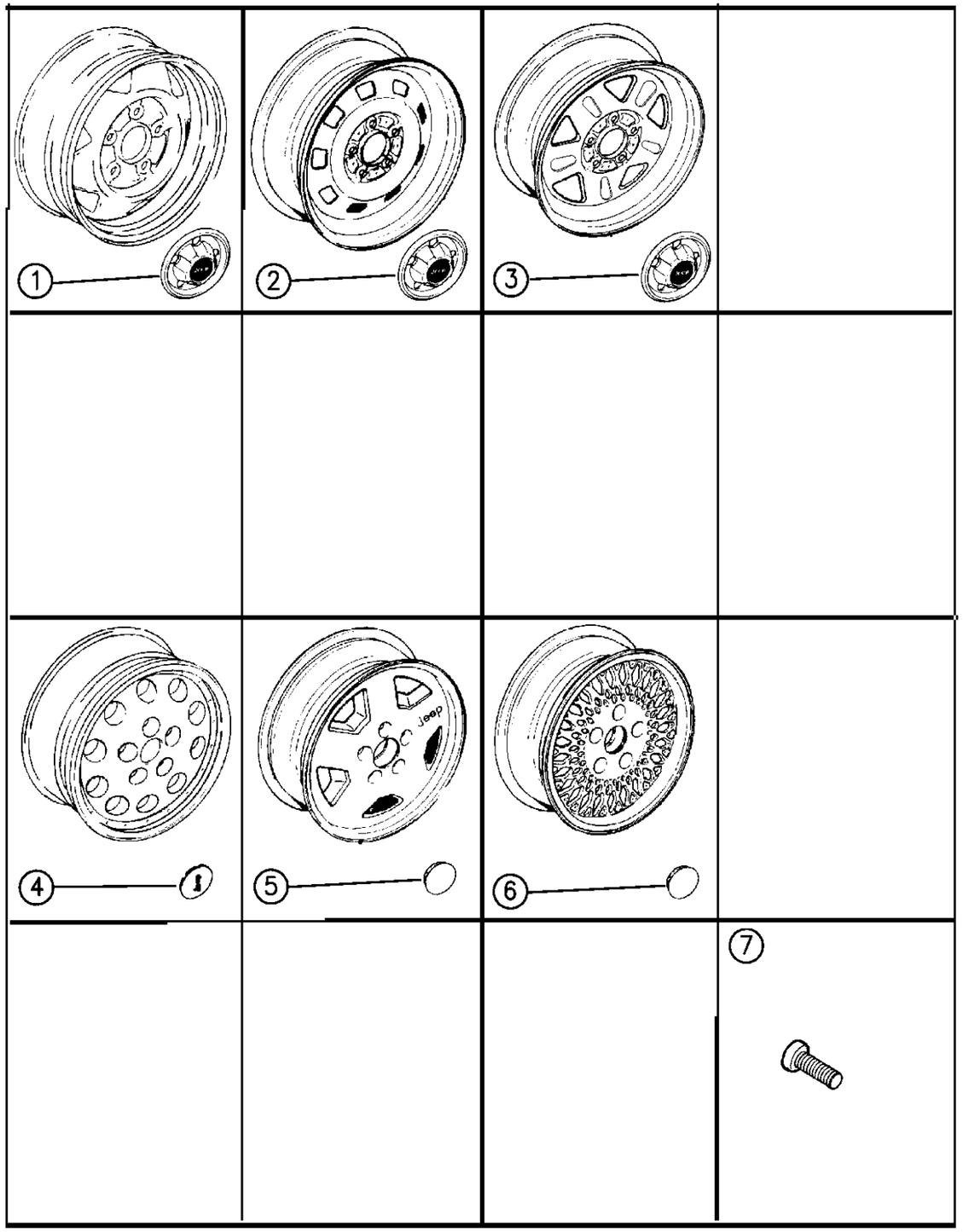

ITEM	PART NUMBER	QTY	BODY	MODEL	DESCRIPTION
1	5200 1179	4			CAP, Hub w/Applique, Black, w/Jeep Logo Written in White, Used w/(WJD) Wheel
2	5200 1179	4			CAP, Hub w/Applique, Black, w/Jeep Logo Written in White, Used w/(WJK) Wheel
3	5CF3 4L4A	4			CAP, Hub w/Jeep Logo, Argent, Center Black, Used w/(WJ5) Wheel
4	5200 3759	4			CAP, Hub w/Jeep Logo, Written in Silver, Used w/(WJH Wheel)
5	5200 2971	4			CAP, Hub, Bright, Used w/(WJN) Wheel
	5DY0 7TA8	4			CAP, Center, Used With (WJ3) Wheel
6					CAP, Hub
	5200 3759	4			w/Jeep Logo Written in Silver, Used w/(WJH) Wheel
	5200 3621	4			Black w/Jeep Logo Written in Gold, Used w/(WJ7) Wheel
	5200 2971	4			Bright, Used w/(WJG)or(WJ1) Wheel
7	3420 2523	12			SCREW, Center Cap to Wheel

MODEL CODES:

72=2 DR Wagon
74=4 DR Wagon
77=Open Body 93" Whlbase
78=Open Body 103" Whlbase - Export
T=2WD
J,N=4WD
U=4WD (RHD)

BODY STYLES:

YJ=Wrangler (4X4) "S"
Weangler (4X4) SE
Wrangler (4X4) Sahara
Wrangler (4X4) Renegade

XJ=Cherokee SE
Cherokee Sport
Cherokee Country

ZJ=Grand Cherokee SE
Grand Cherokee Laredo
Grand Cherolee Limited
ZG=Grand Cherokee European

Y1=Wrangler
X1=Cherokee
Z1=Grand Cherokee
KDX=Vehicles

AR = Use as Required - = Non Illustrated Part P.A.R. = Paint as Required

CAPS, WHEEL COVER, CENTER ZJ, ZG BODY
Figure 22-230

22-230B

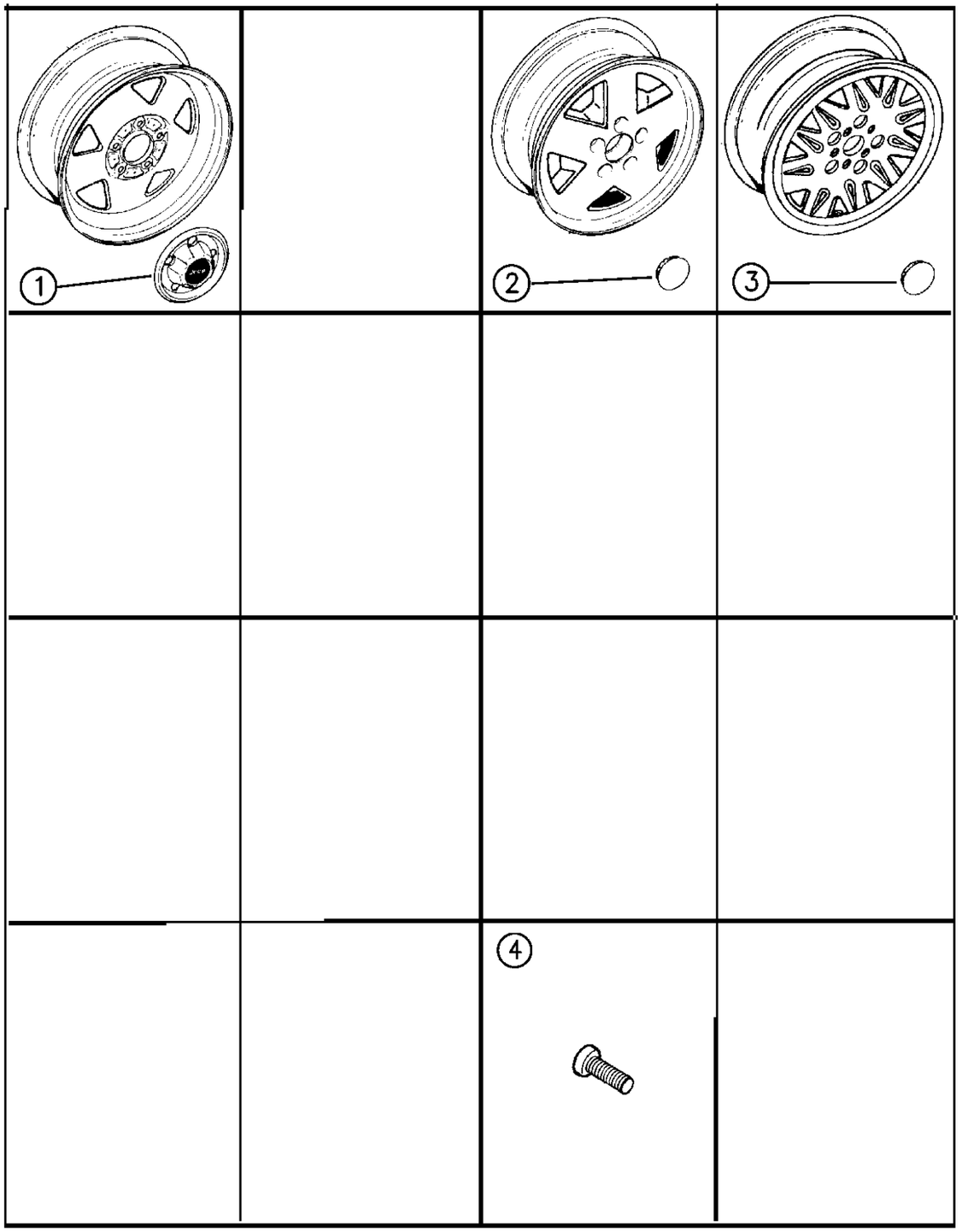

ITEM	PART NUMBER	QTY	BODY	MODEL	DESCRIPTION
1	5CF3 4L4A	4			CAP, Hub w/Applique, Argent, w/Jeep Logo, Center Black, Used w/(WJ5) Wheel
2	5200 5732	4			CAP, Center, Aluminum Surface Circular Brush, Used w/(WJ6/ WJ1) Wheel
3	5CF9 7L3X	4			CAP, Center, Circular Brushed Aluminum, w/Semi Gloss Black Outlining Jeep Name (WJ7,WDM,WDR) Wheel
4	3420 2523	12			SCREW, Center Cap to Wheel

MODEL CODES:

72=2 DR Wagon
74=4 DR Wagon
77=Open Body 93" Whlbase
78=Open Body 103" Whlbase - Export
T=2WD
J,N=4WD
U=4WD (RHD)

BODY STYLES:

YJ=Wrangler (4X4) "S"
Weangler (4X4) SE
Wrangler (4X4) Sahara
Wrangler (4X4) Renegade

XJ=Cherokee SE
Cherokee Sport
Cherokee Country

ZJ=Grand Cherokee SE
Grand Cherokee Laredo
Grand Cherolee Limited
ZG=Grand Cherokee European

Y1=Wrangler
X1=Cherokee
Z1=Grand Cherokee
KDX=Vehicles

AR = Use as Required - = Non Illustrated Part P.A.R. = Paint as Required

JACK STOWAGE YJ BODY
Figure 22-310

22-310A

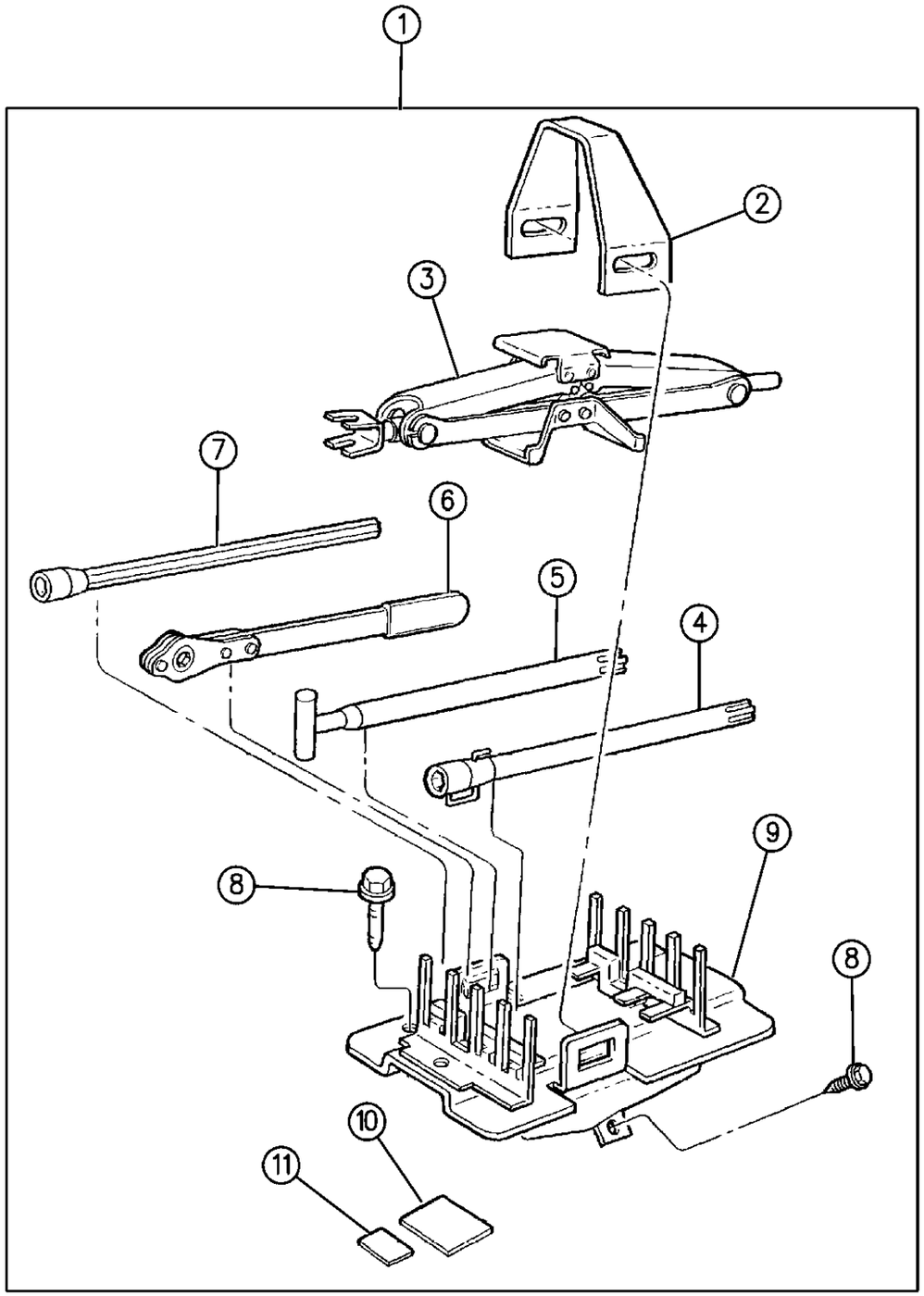

94J22 310

ITEM	PART NUMBER	QTY	BODY	MODEL	DESCRIPTION
1	4636 395	1			JACK PKG, Scissor Type ***
					Consists Of:
					1 - 4432174 Bracket
					1 - 52006166 Jack Assy.
					1 - 52088117 Jack Release
					1 - 52006169 Extension
					1 - 52006170 T/Bar
					1 - 52006859 Bracket Assy.
					1 - 52006867 Wrench
					1 - 52006868 Crank
					1 - 52004654 Sticker
					1 - 52004655 Sticker
					1 - 52006186 Sticker
2	4432 174	1			BRACKET, In Cab Jack Stowage, Upper
3	5200 6166	1			JACK, Screw Type
4	5200 6169	1			EXTENSION, Jack Handle
5	5200 6170	1			T/BAR, Jack Handle ***
6	4522 119	1			CRANK, Jack Handle
7	5200 6867	1			WRENCH, Wheel Lug Nut
8	J400 6850	3			SCREW, w/Washer, (1/4-20 x 5/8")
9	5200 6859	1			BRACKET, In Cab Jack Stowage, Lower
10					LABEL, Jack Instructions
	5200 4654	1			BUX, CANADA
	5200 4655	1			U.S.
11	5200 6186	1			LABEL, Jack Stowage Instructions

MODEL CODES:

72=2 DR Wagon
74=4 DR Wagon
77=Open Body 93" Whlbase
78=Open Body 103" Whlbase - Export
T=2WD
J,N=4WD
U=4WD (RHD)

BODY STYLES:

YJ=Wrangler (4X4) "S"
Weangler (4X4) SE
Wrangler (4X4) Sahara
Wrangler (4X4) Renegade
XJ=Cherokee SE
Cherokee Sport
Cherokee Country
ZJ=Grand Cherokee SE
Grand Cherokee Laredo
Grand Cherolee Limited
ZG=Grand Cherokee European
Y1=Wrangler
X1=Cherokee
Z1=Grand Cherokee
KDX=Vehicles

AR = Use as Required - = Non Illustrated Part P.A.R. = Paint as Required

« RETURN TO GROUP INDEX

JACK STOWAGE XJ BODY
Figure 22-320

22-320A

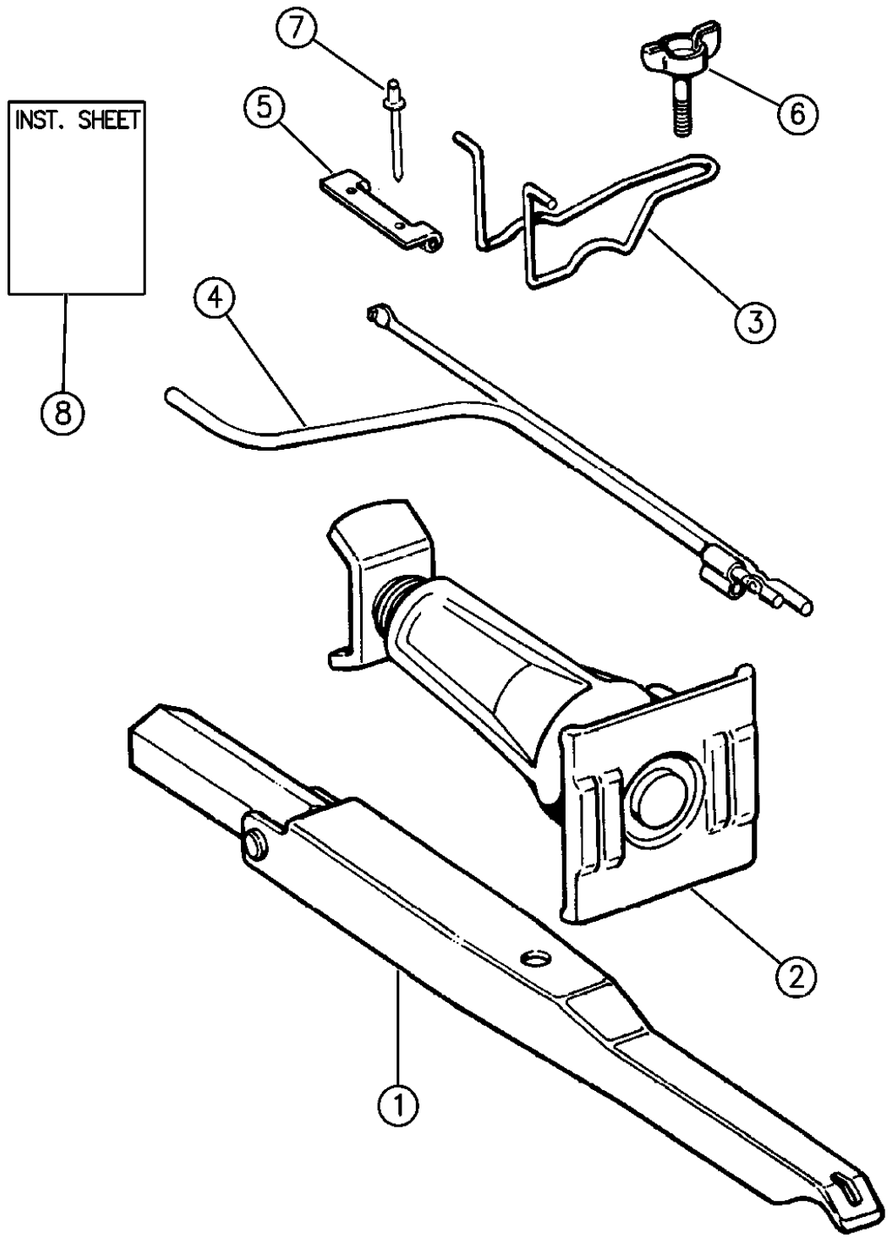

94J22 320

ITEM	PART NUMBER	QTY	BODY	MODEL	DESCRIPTION
1	5200 3583	1			WRENCH, Wheel Lug Nut
2					JACK, Screw Type
	5208 7912	1			1994-95
	5208 8450	1			1996
3	5200 3474	1			RETAINER, Jack Hold Down
4	5200 0221	1			HANDLE, Jack Crank
5	5200 1202	1			BRACKET, Jack Hold Down Retainer
6	5200 0354	1			STUD
7	3420 1684	2			RIVET
8	5200 4650	1			STRIKER, Jack Instructions

MODEL CODES:

72=2 DR Wagon
74=4 DR Wagon
77=Open Body 93" Whlbase
78=Open Body 103" Whlbase - Export
T=2WD
J,N=4WD
U=4WD (RHD)

BODY STYLES:

YJ=Wrangler (4X4) "S"
Weangler (4X4) SE
Wrangler (4X4) Sahara
Wrangler (4X4) Renegade
XJ=Cherokee SE
Cherokee Sport
Cherokee Country
ZJ=Grand Cherokee SE
Grand Cherokee Laredo
Grand Cherolee Limited
ZG=Grand Cherokee European
Y1=Wrangler
X1=Cherokee
Z1=Grand Cherokee
KDX=Vehicles

AR = Use as Required - = Non Illustrated Part P.A.R. = Paint as Required

JACK STOWAGE ZJ, ZG BODY
Figure 22-330

22–330

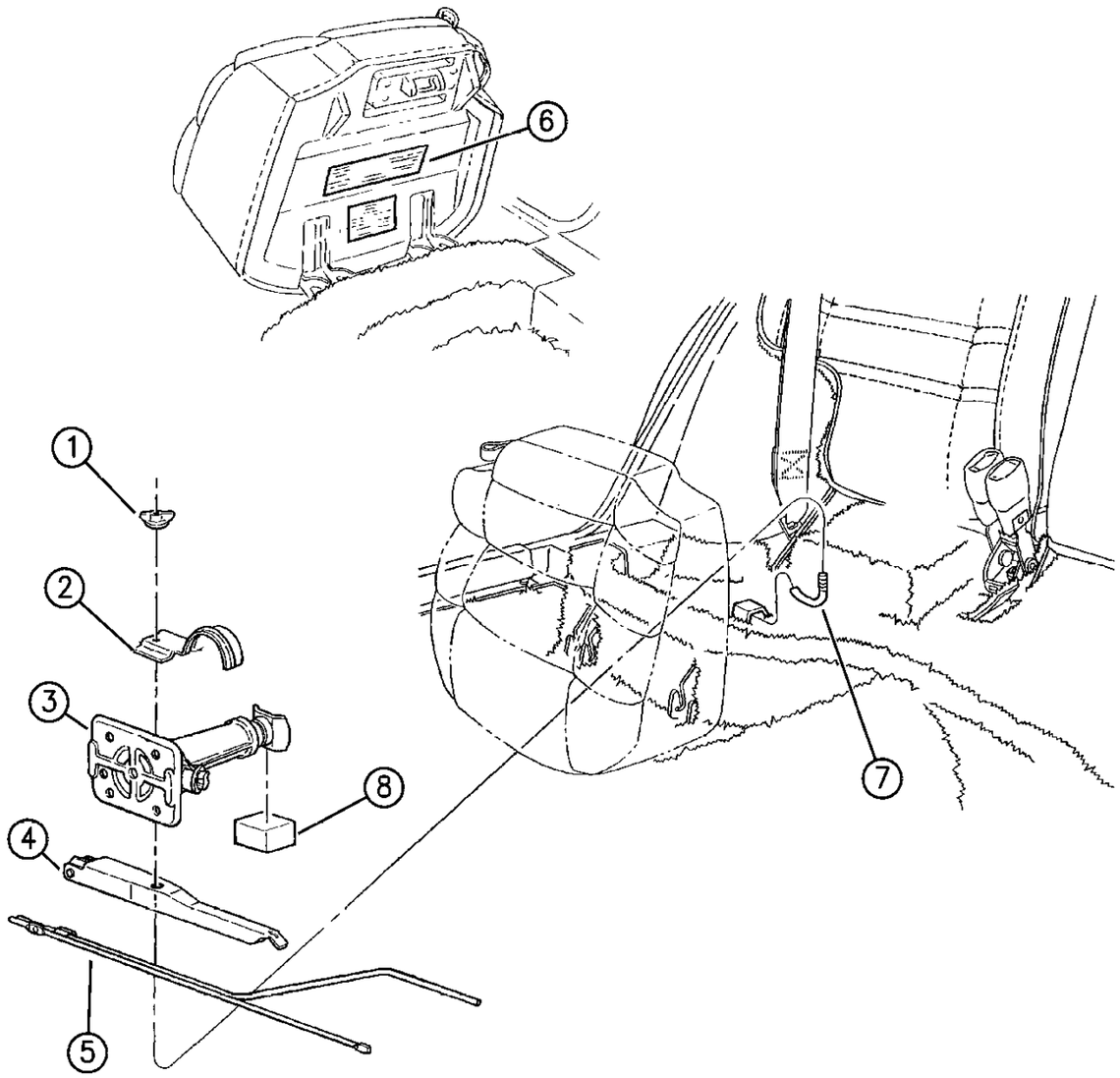

94J22 330

ITEM	PART NUMBER	QTY	BODY	MODEL	DESCRIPTION
1	3420 1676	1			NUT, Jack Mtg. Wing
2	5200 5581	1			BRACKET, Jack Hold Down
3					JACK, Screw Type
	5208 7912	1			1994-95
	5208 8450	1			1996
4	5200 3583	1			WRENCH, Wheel Lug Nut
5	5200 0221	1			HANDLE, Jack Crank
6		1			LABEL, Jack Stowage (DNS)
7	5200 5582	1			BOLT, Jack Hold Down
8	5208 7666	1			PAD, Jack Block Rubber

MODEL CODES:

72=2 DR Wagon
74=4 DR Wagon
77=Open Body 93" Whlbase
78=Open Body 103" Whlbase - Export
T=2WD
J,N=4WD
U=4WD (RHD)

BODY STYLES:

YJ=Wrangler (4X4) "S"
Weangler (4X4) SE
Wrangler (4X4) Sahara
Wrangler (4X4) Renegade

XJ=Cherokee SE
Cherokee Sport
Cherokee Country

ZJ=Grand Cherokee SE
Grand Cherokee Laredo
Grand Cherolee Limited
ZG=Grand Cherokee European

Y1=Wrangler
X1=Cherokee
Z1=Grand Cherokee
KDX=Vehicles

AR = Use as Required - = Non Illustrated Part P.A.R. = Paint as Required

WHEEL, SPARE TAILGATE MOUNTING YJ BODY
Figure 22-410

22-410A

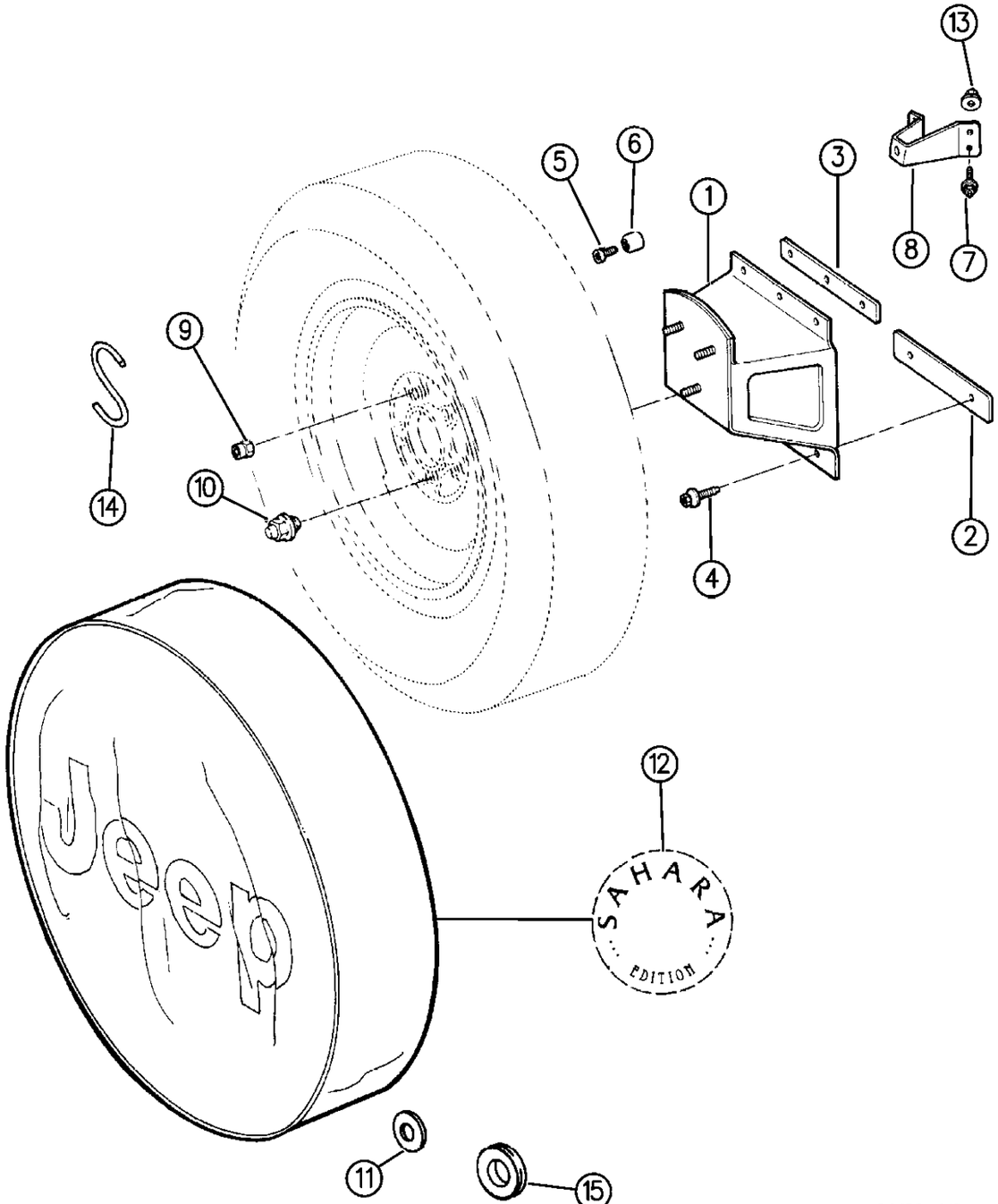

ITEM	PART NUMBER	QTY	BODY	MODEL	DESCRIPTION
1	5517 5895	1			BRACKET, Spare Tire Mounting
	5501 5857	1			EUROPE
2	5501 0928	1			GASKET
3	5501 0841	1			GASKET
4					SCREW, Mounting Bracket
	J400 7319	5			1994
	6035 053	5			1995
5	J400 7562	2			SCREW, w/Washer
6					BUMPER
	5500 8263	4			Length, 1.22", w/Compact Spare Tire
	5501 3350	4			Length, 1.62", w/Conventional Spare Tire
	5534 5519	4			Length, 1.85", w/Aluminum Wheel
7	J400 6850	4			SCREW
8	5500 8244	1			BRACKET, Spare Tire Stop
9	J400 7186	1			LOCK PACKAGE, Spare Wheel (McGARD)
					Consists Of:
					1-Locknut
					1-Key
					1-Poly Bag
					1-Registration Card
					1-Label
10	J400 6956	2			NUT, w/Cap Lug
11	J546 1609	2			WASHER, Spare Tire Cover
12					COVER, Spare Tire, ("SAHARA" Logo)
	5CK1 1LJ5	1			Khaki
	5CK1 1LTB	1			Spice
	5CK1 1RTZ	1			Spice,Green,Sand
13	J941 6918	4			NUT, EUROPE, MIDEAST
14	J546 0441	1			HOOK, Spare Tire Cover
15	J546 1608	2			GROMMET, Spare Tire Cover

MODEL CODES:

72=2 DR Wagon
74=4 DR Wagon
77=Open Body 93" Whlbase
78=Open Body 103" Whlbase - Export
T=2WD
J,N=4WD
U=4WD (RHD)

BODY STYLES:

YJ=Wrangler (4X4) "S"
Weangler (4X4) SE
Wrangler (4X4) Sahara
Wrangler (4X4) Renegade

XJ=Cherokee SE
Cherokee Sport
Cherokee Country

ZJ=Grand Cherokee SE
Grand Cherokee Laredo
Grand Cherolee Limited
ZG=Grand Cherokee European

Y1=Wrangler
X1=Cherokee
Z1=Grand Cherokee
KDX=Vehicles

AR = Use as Required - = Non Illustrated Part P.A.R. = Paint as Required

« RETURN TO GROUP INDEX

WHEEL, SPARE TAILGATE MOUNTING YJ BODY KDX
Figure 22-420

22-420

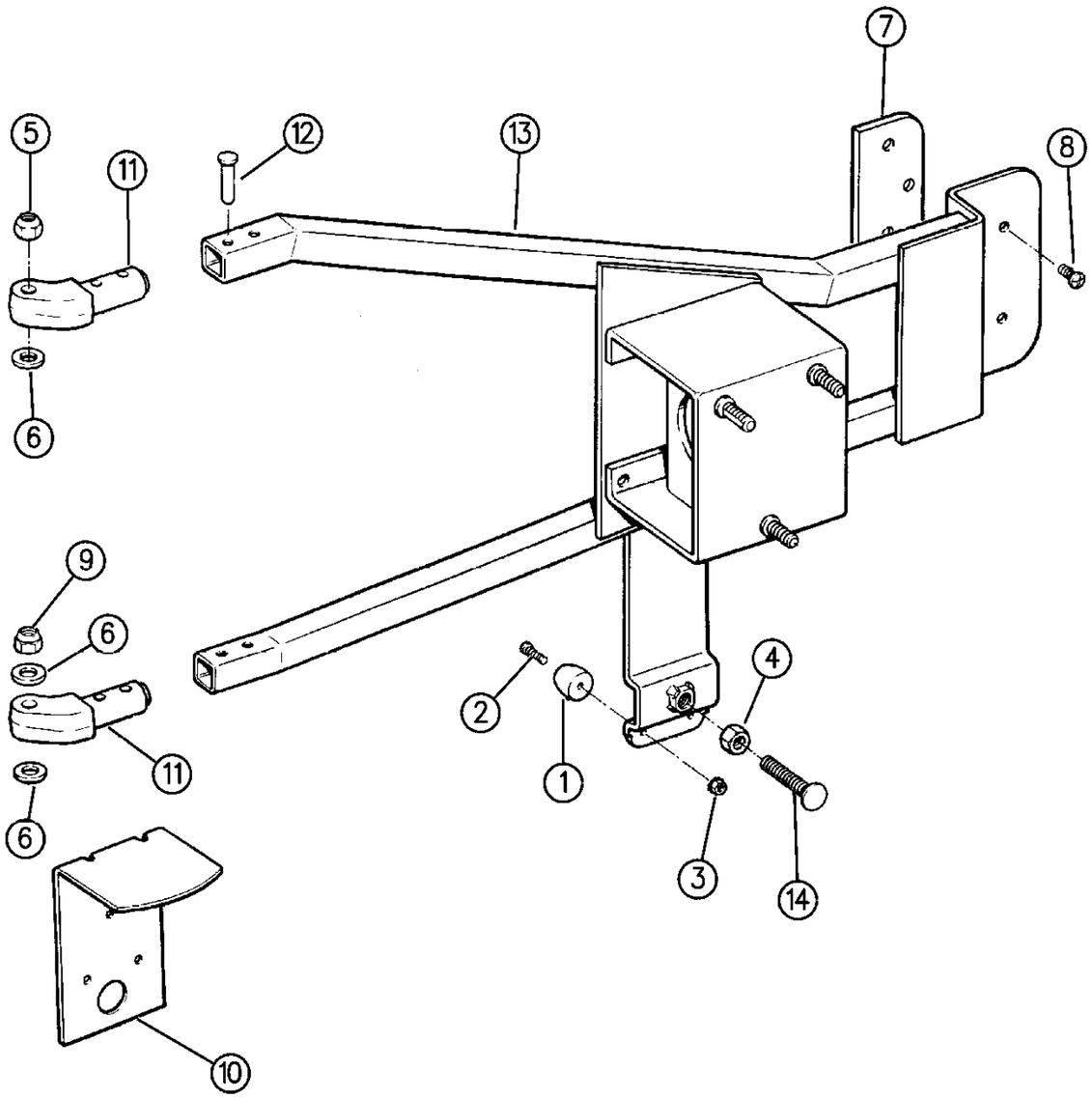

94J22 420

ITEM	PART NUMBER	QTY	BODY	MODEL	DESCRIPTION
1	J096 8734	2			BUMPER
2	J015 9947	2			SCREW
3	J027 1166	2			NUT
4	J012 0238	1			NUT, Jam
5	J805 2458	2			NUT
6	J400 7070	4			WASHER
7	J805 2220	1			PLATE
8	J400 6986	2			SCREW
9	J400 5739	2			LOCK NUT
10	J805 2261	1			BRACKET
11	J805 2197	2			ARM, Pivot
12	J805 3204	4			RIVET
13	5534 5694	1			CARRIER, Tire
14	J097 2773	1			BOLT

MODEL CODES:

72=2 DR Wagon
74=4 DR Wagon
77=Open Body 93" Whlbase
78=Open Body 103" Whlbase - Export
T=2WD
J,N=4WD
U=4WD (RHD)

BODY STYLES:

YJ=Wrangler (4X4) "S"
Weangler (4X4) SE
Wrangler (4X4) Sahara
Wrangler (4X4) Renegade
XJ=Cherokee SE
Cherokee Sport
Cherokee Country
ZJ=Grand Cherokee SE
Grand Cherokee Laredo
Grand Cherolee Limited
ZG=Grand Cherokee European
Y1=Wrangler
X1=Cherokee
Z1=Grand Cherokee
KDX=Vehicles

AR = Use as Required - = Non Illustrated Part P.A.R. = Paint as Required

WHEEL, SPARE INSIDE MOUNTING XJ BODY
Figure 22-430

22-430B

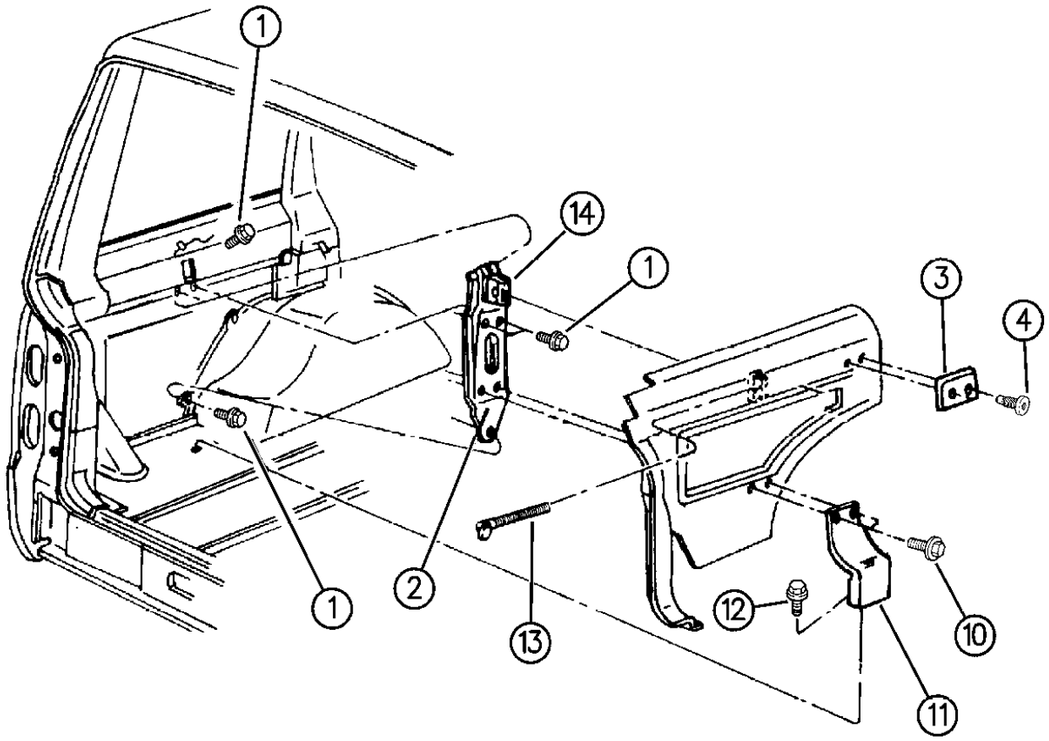

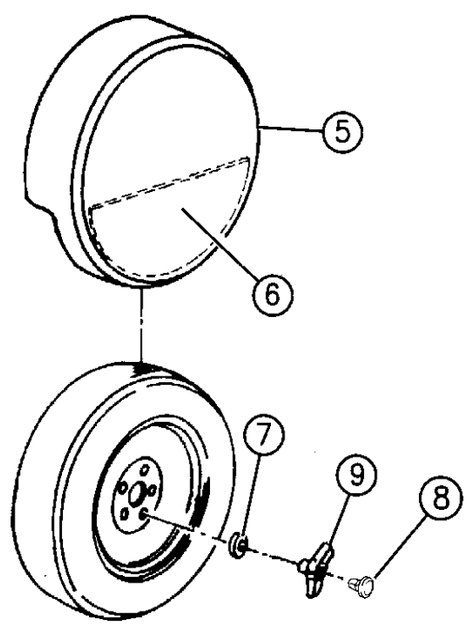

94J22 430

ITEM	PART NUMBER	QTY	BODY	MODEL	DESCRIPTION
1	3420 1381	4			SCREW
2	5534 5177	1			BRACKET, Spare Tire Mounting
3					REST, Spare Tire (DNS) ***
4					SCREW (DNS)
5					COVER, Spare Tire, Inside Vinyl
					T125 Tire, (Compact Spare)
	5AJ7 4JA8	1			Charcoal, Up To 1-3-94
	5DZ6 4PA8	1			Charcoal, After 1-3-94
	5AJ7 4JY6	1			Sand, Up To 1-3-94
	5DZ6 4PY6	1			Sand, After 1-3-94
	5FM7 4SA8	1			Charcoal, 1996
	5FM7 4SY6	1			Sand, 1996
					P215, P225 Tire
	5AJ7 8JA8	1			Charcoal, Up To 12-20-93
	5DZ6 6PA8	1			Charcoal, After 12-20-93
	5AJ7 8JY6	1			Sand, Up To 12-20-93
	5DZ6 6PY6	1			Sand, After 12-20-93
	5FM7 6SA8	1			Charcoal, 1996
	5FM7 6SY6	1			Sand, 1996
	5208 8459	1			PAD, Spare Tire Positioning
6					LABEL, Jack w/Spare Tire, (DNS)
7	J400 6404	1			WASHER
8	5200 0733	1			CAP, Thread Protector
9	6503 070	1			NUT, Wing
10	3420 1610	1			SCREW
11	5500 0859	1			BRACKET, Spare Tire Mtg. To Floor
12	1150 0101	2			SCREW
13					ROD, Tire Hold Down
	5200 0731	1			125mm
	5200 2705	1			174mm
14	5500 3494	1			BRACKET, Swing Bolt Retainer

MODEL CODES:

72=2 DR Wagon
74=4 DR Wagon
77=Open Body 93" Whlbase
78=Open Body 103" Whlbase - Export
T=2WD
J,N=4WD
U=4WD (RHD)

BODY STYLES:

YJ=Wrangler (4X4) "S"
Weangler (4X4) SE
Wrangler (4X4) Sahara
Wrangler (4X4) Renegade
XJ=Cherokee SE
Cherokee Sport
Cherokee Country
ZJ=Grand Cherokee SE
Grand Cherokee Laredo
Grand Cherolee Limited
ZG=Grand Cherokee European
Y1=Wrangler
X1=Cherokee
Z1=Grand Cherokee
KDX=Vehicles

AR = Use as Required - = Non Illustrated Part P.A.R. = Paint as Required

« RETURN TO GROUP INDEX

WHEEL, SPARE INSIDE MOUNTING XJ BODY RHD
Figure 22-440

22-440

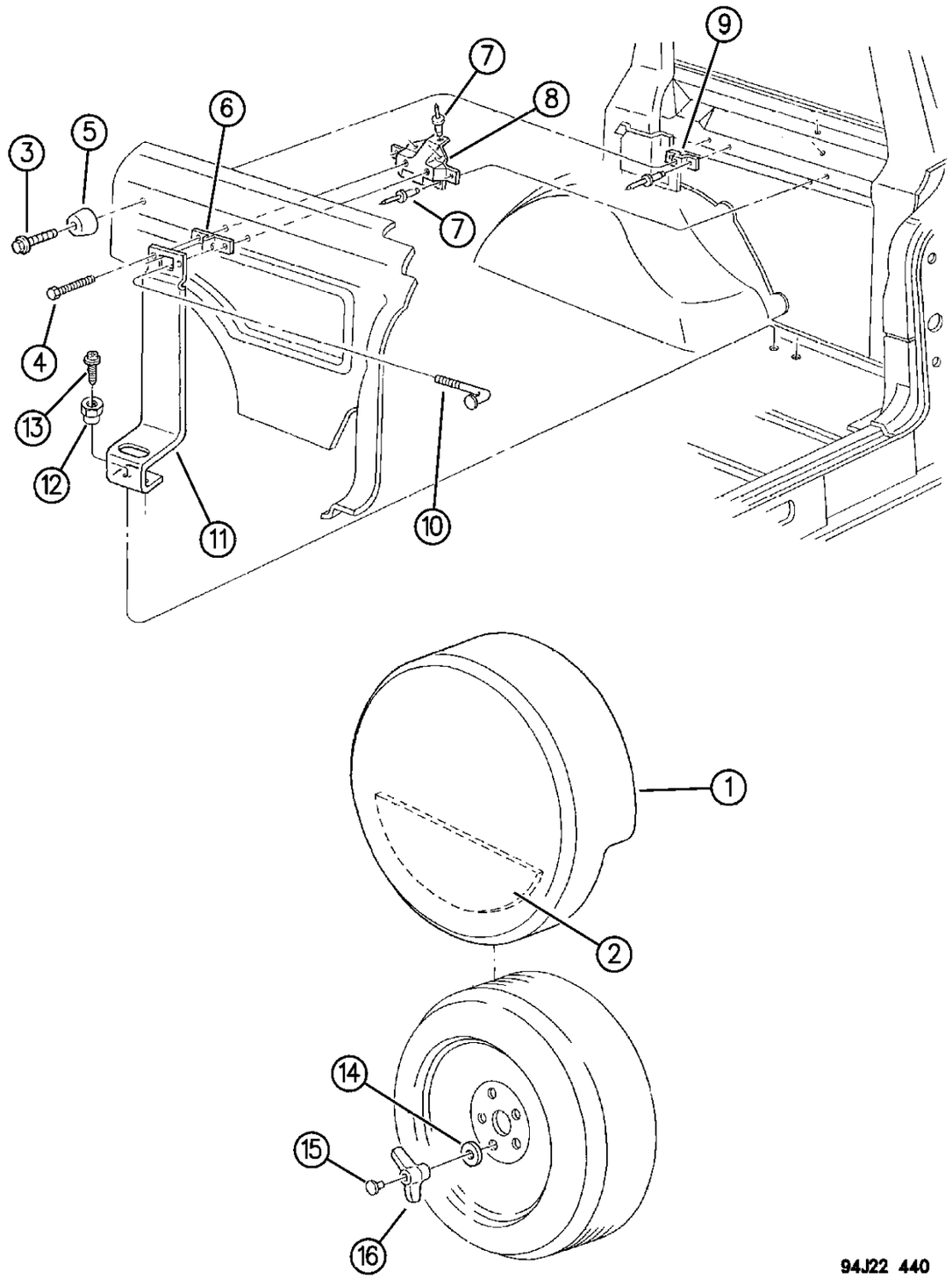

ITEM	PART NUMBER	QTY	BODY	MODEL	DESCRIPTION
1					COVER, Spare Tire, Inside Vinyl
					w/T125 Tire, (Compact Spare)
	5AJ7 4JA8	1			Charcoal, Up To 1-3-94
	5DZ6 4PA8	1			Charcoal, After 1-3-94
	5AJ7 4JY6	1			Sand, Up To 1-3-94
	5DZ6 4PY6	1			Sand, After 1-3-94
					w/LT215, LT225 Tire
	5AJ7 8JA8	1			Charcoal, Up To 12-20-93
	5DZ6 6PA8	1			Charcoal, After 12-20-93
	5AJ7 8JY6	1			Sand, Up To 12-20-93
	5DZ6 6PY6	1			Sand, After 12-20-93
2	5200 4650	1			STICKER, Jack Instructions ***
3		1			SCREW (DNS)
4	6101 452	2			SCREW, Bracket
5					REST, Spare Tire ***
	5CP1 4LS1	1			Charcoal
	5CP1 4LY6	1			Sand
6	5534 5292	1			BRACKET, Swing Bolt Retainer
7	3420 1197	9			RIVET
8	5534 5872	1			BRACKET, Belt Rail
9		1			BRACKET, Trim Panel Support (DNS)
10	5200 0731	1			BOLT, Spare Wheel Hold Down
11	5534 4556	1			BRACKET, Spare Tire Mounting
12	6502 751	2			NUT
13	3420 1661	2			SCREW
14	J400 6404	1			WASHER, Tire Mounting
15	5200 0733	1			CAP, Thread Protector
16	6503 070	1			NUT, Tire Hold Down Wing

MODEL CODES:

72=2 DR Wagon
74=4 DR Wagon
77=Open Body 93" Whlbase
78=Open Body 103" Whlbase - Export
T=2WD
J,N=4WD
U=4WD (RHD)

BODY STYLES:

YJ=Wrangler (4X4) "S"
Weangler (4X4) SE
Wrangler (4X4) Sahara
Wrangler (4X4) Renegade
XJ=Cherokee SE
Cherokee Sport
Cherokee Country
ZJ=Grand Cherokee SE
Grand Cherokee Laredo
Grand Cherolee Limited
ZG=Grand Cherokee European
Y1=Wrangler
X1=Cherokee
Z1=Grand Cherokee
KDX=Vehicles

AR = Use as Required - = Non Illustrated Part P.A.R. = Paint as Required

WHEEL, SPARE OUTSIDE MOUNTING, SWING AWAY XJ BODY
Figure 22-450

22-450

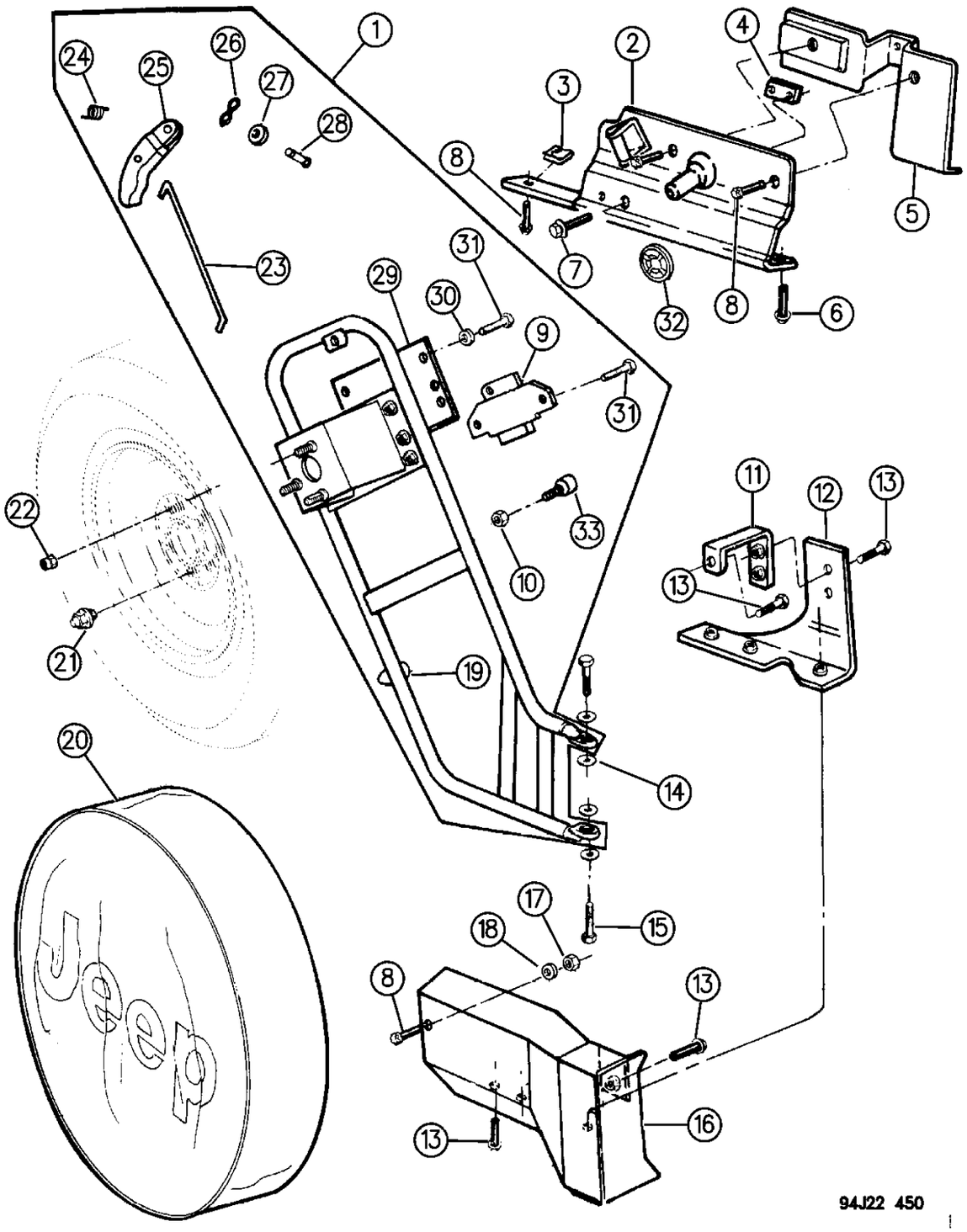

ITEM	PART NUMBER	QTY	BODY	MODEL	DESCRIPTION
1	5502 5329	1			CARRIER, Spare Tire Swingaway
2	5502 6244	1			REINFORCEMENT, Liftgate, Outer
3	6101 283	1			U-NUT
4	5502 6245	1			BRACKET, Liftgate
5	5502 6243	1			REINFORCEMENT, Liftgate, Inner
6	6503 398	1			BOLT
7	3420 2452	1			SCREW
8	3420 1596	5			BOLT
9	5200 5822	1			MECHANISM, Lock ***
10	6100 219	1			NUT
11	5502 6247	1			REINFORCEMENT, Upper
12	5502 6246	1			REINFORCEMENT, Lower
13	3420 2467	7			BOLT
14	8350 7112	1			PACKAGE, Bushing
15	6004 504	2			BOLT, Carrier Pivot
16	5200 5823	1			BRACKET, Bumper
17	6101 467	1			NUT
18	6501 000	1			WASHER, Flat
19	5200 5825	1			BUMPER, Lower
20	5501 6126	1			COVER, Black Spare
21	J400 6956	2			NUT, Wheel Lug Capped
22	J400 7186	1			PACKAGE, Spare Wheel (MC-GARD) Lock
					Consists Of:
					1-Lock-Nut
					1-Key
					1-Poly Bag
23	5200 5821	1			ROD, Handle
24	5523 4511	1			SPRING, Handle Return
25	5200 5820	1			HANDLE
26	5523 4514	1			CLIP
27	5523 4513	1			WASHER
28	5523 4512	1			PIN, Handle
29	5523 4515	1			PLATE, Adjuster
30	5523 4510	4			WASHER, Adjuster Plate
31	5523 4517	4			BOLT, Adjuster Plate and Latch
32	5523 4516	1			SLEEVE, Latch Pin
33	5200 5826	1			BUMPER, Upper

MODEL CODES:

72=2 DR Wagon
74=4 DR Wagon
77=Open Body 93" Whlbase
78=Open Body 103" Whlbase - Export
T=2WD
J,N=4WD
U=4WD (RHD)

BODY STYLES:

YJ=Wrangler (4X4) "S"
Weangler (4X4) SE
Wrangler (4X4) Sahara
Wrangler (4X4) Renegade

XJ=Cherokee SE
Cherokee Sport
Cherokee Country

ZJ=Grand Cherokee SE
Grand Cherokee Laredo
Grand Cherolee Limited
ZG=Grand Cherokee European

Y1=Wrangler
X1=Cherokee
Z1=Grand Cherokee
KDX=Vehicles

AR = Use as Required - = Non Illustrated Part P.A.R. = Paint as Required

« RETURN TO GROUP INDEX

WHEEL, SPARE INSIDE MOUNTING ZJ, ZG BODY
Figure 22-460

22-460A

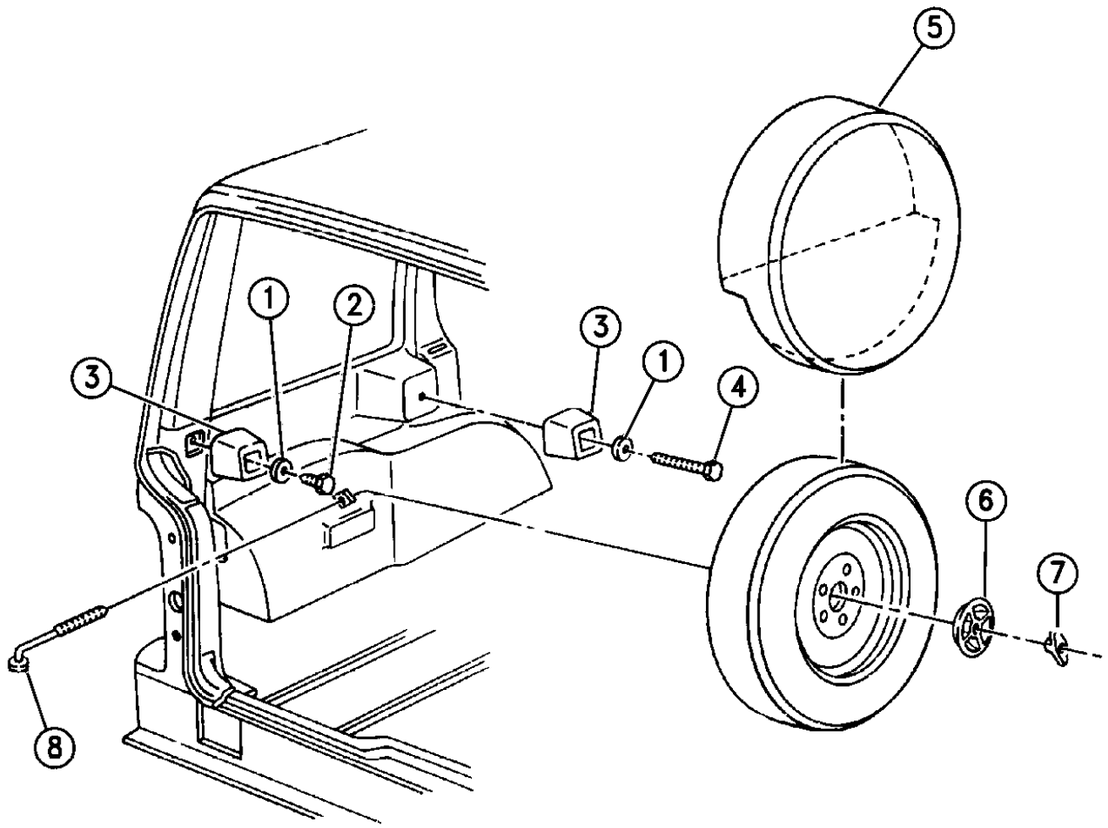

94J22 460

ITEM	PART NUMBER	QTY	BODY	MODEL	DESCRIPTION
1	6100 876	2			WASHER
2	6034 576	1			SCREW, Bumper, Rear
3	5502 7231	2			BUMPER, Full Size Tire
4	6503 456	1			BOLT, Bumper, Front
5					COVER, Spare Tire
					w/o Zipper ***
					T155 Tire, (Compact Spare)
	5DL8 5MD5	1			Med. Quartz
	5DL8 5MF8	1			Dk. Driftwood
	5DL8 5MV4	1			Lt. Champagne
					P215 Tire
					1994-95
	5AT9 7LD5	1			Med. Quartz, Up To, 8-17-94
	5EK9 1RD5	1			Med. Quartz, After, 8-17-94
	5AT9 7LF8	1			Dk. Driftwood, Up To, 10-25-94
	5EK9 1RF8	1			Dk. Driftwood, After, 10-25-94
	5AT9 7PV4	1			Lt. Champagne, Up To, 8-5-94
	5EK9 1RV4	1			Lt. Champagne, After, 8-5-94
					1996
	5EK9 1SAZ	1			Agate
	5EK9 1SC3	1			Blue
	5EK9 1ST6	1			Spice
					P225 (OWL)
	5AU4 4LD5	1			Med. Quartz
	5AU4 4LF8	1			Dk. Driftwood
	5AU4 4PV4	1			Lt. Champagne
					P225 (OWL) EAGLE GT
	5CW0 2LD5	1			Med. Quartz
	5CW0 2LF8	1			Dk. Driftwood
	5CW0 2MV4	1			Lt. Champagne
					P235 Tire
	5AT9 9LD5	1			Med. Quartz
	5AT9 9LF8	1			Dk. Driftwood
	5AT9 9MV4	1			Lt. Champagne
					w/Zipper
					T155 Tire, (Compact Spare)
					1994-95
	5EK9 0RD5	1			Med. Quartz
	5EK9 0RF8	1			Dk. Driftwood
	5EK9 0RV4	1			Lt. Champagne
					1996
	5EK9 0SAZ	1			Agate

MODEL CODES:

72=2 DR Wagon
74=4 DR Wagon
77=Open Body 93" Whlbase
78=Open Body 103" Whlbase - Export
T=2WD
J,N=4WD
U=4WD (RHD)

BODY STYLES:

YJ=Wrangler (4X4) "S"
Weangler (4X4) SE
Wrangler (4X4) Sahara
Wrangler (4X4) Renegade
XJ=Cherokee SE
Cherokee Sport
Cherokee Country
ZJ=Grand Cherokee SE
Grand Cherokee Laredo
Grand Cherolee Limited
ZG=Grand Cherokee European
Y1=Wrangler
X1=Cherokee
Z1=Grand Cherokee
KDX=Vehicles

AR = Use as Required - = Non Illustrated Part P.A.R. = Paint as Required

WHEEL, SPARE INSIDE MOUNTING ZJ, ZG BODY
Figure 22-460

22-460A

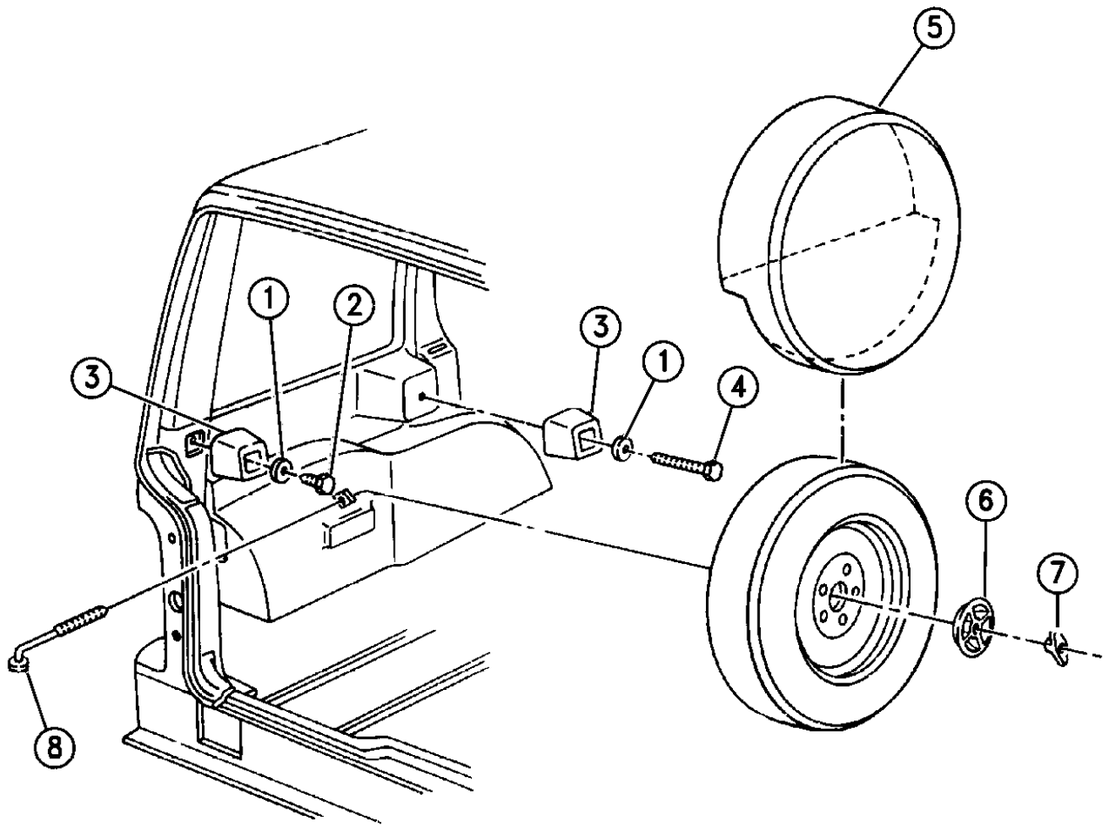

94J22 460

ITEM	PART NUMBER	QTY	BODY	MODEL	DESCRIPTION
	5EK9 0SC3	1			Blue
	5EK9 0ST6	1			Spice
					P215 Tire
					1994-95
	5EK9 1RD5	1			Med. Quartz
	5EK9 1RF8	1			Dk. Driftwood
	5EK9 1RV4	1			Lt. Champagne
					1996
	5EK9 1SAZ	1			Agate
	5EK9 1SC3	1			Blue
	5EK9 1ST6	1			Spice
					P225 (OWL)
					1994-95
	5EK9 2RD5	1			Med. Quartz
	5EK9 2RF8	1			Dk. Driftwood
	5EK9 2RV4	1			Lt. Champagne
					1996
	5EK9 2SAZ	1			Agate
	5EK9 2SC3	1			Blue
	5EK9 2ST6	1			Spice
					P225 (OWL) EAGLE GT
	5EK9 4RD5	1			Med. Quartz
	5EK9 4RF8	1			Dk. Driftwood
	5EK9 4RV4	1			Lt. Champagne
	5EK9 4SAZ	1			Agate 1996
	5EK9 4SC3	1			Mist Gray 1996
	5EK9 4ST6	1			Spice/Saddle 1996
	5FC4 1STJ	1			Tan/Green "Orvis"
					P245 Tire
					1994-95
	5EK9 3RD5	1			Med. Quartz
	5EK9 3RF8	1			Dk. Driftwood
	5EK9 3RV4	1			Lt. Champagne
	5DZ2 8RJ4	1			Gold, "Orvis"
					1996
	5EK9 3SAZ	1			Agate
	5EK9 3SC3	1			Blue
	5EK9 3ST6	1			Spice
6	5208 7669	1			CUP, Spare Tire Retention ***
7	6503 070	1			NUT, Tire Secure Bolt Wing
8	5200 2705	1			BOLT, Spare Tire

MODEL CODES:

72=2 DR Wagon
74=4 DR Wagon
77=Open Body 93" Whlbase
78=Open Body 103" Whlbase - Export
T=2WD
J,N=4WD
U=4WD (RHD)

BODY STYLES:

YJ=Wrangler (4X4) "S"
Weangler (4X4) SE
Wrangler (4X4) Sahara
Wrangler (4X4) Renegade
XJ=Cherokee SE
Cherokee Sport
Cherokee Country
ZJ=Grand Cherokee SE
Grand Cherokee Laredo
Grand Cherolee Limited
ZG=Grand Cherokee European
Y1=Wrangler
X1=Cherokee
Z1=Grand Cherokee
KDX=Vehicles

AR = Use as Required - = Non Illustrated Part P.A.R. = Paint as Required

SAGIPARTS

GROUP-EYJ
EXTERIOR MOULDINGS AND ORNAMENTATION

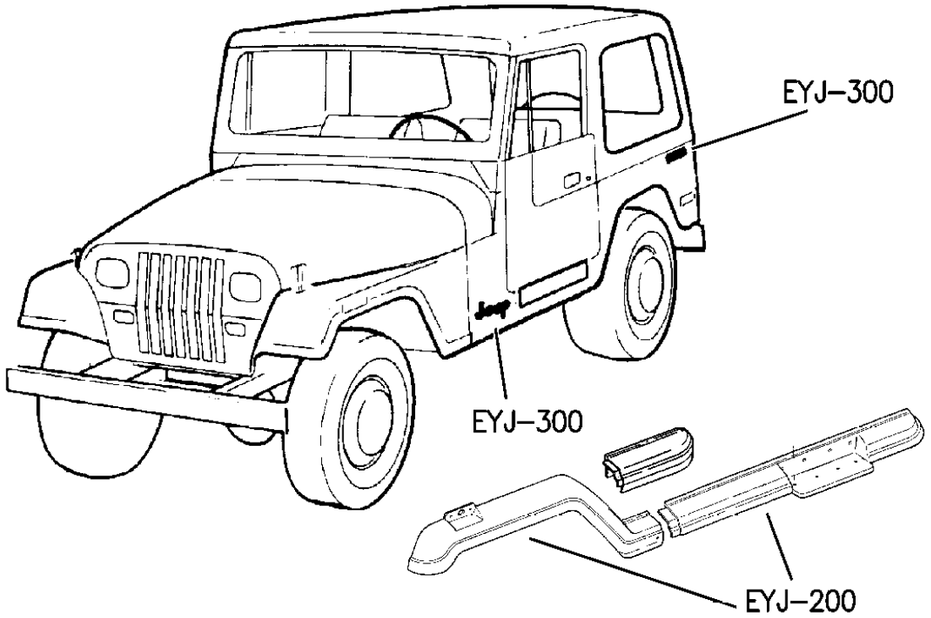

	EYJ–200 MOULDINGS & ORNAMENTATION 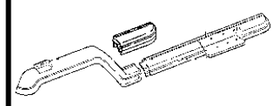	EYJ–300 TAPE & DECALS JEEP WRANGLER	

GROUP EYJ - EXTERIOR ORNAMENTATION WRANGLER

ILLUSTRATION TITLE	GROUP-FIG. NO.
EXTENSIONS	
EXTENSIONS FENDER AND REAR QUARTER YJ BODY, EXCEPT RENEGADE	Fig. EYJ-205
DECALS	
DECALS AND NAMEPLATE YJ BODY	Fig. EYJ-310
DECALS, BODYSIDE BASE VEHICLE W/SPORT TAPES YJ BODY	Fig. EYJ-315
DECALS, BODYSIDE AND REAR SAHARA YJ BODY	Fig. EYJ-320
DECALS, BODYSIDE AND REAR LIMITED, EUROPE YJ BODY	Fig. EYJ-325
DECALS, BODYSIDE AND REAR RENEGADE YJ BODY	Fig. EYJ-330

EXTENSIONS FENDER AND REAR QUARTER YJ BODY, EXCEPT RENEGADE
Figure EYJ-205

EYJ-205

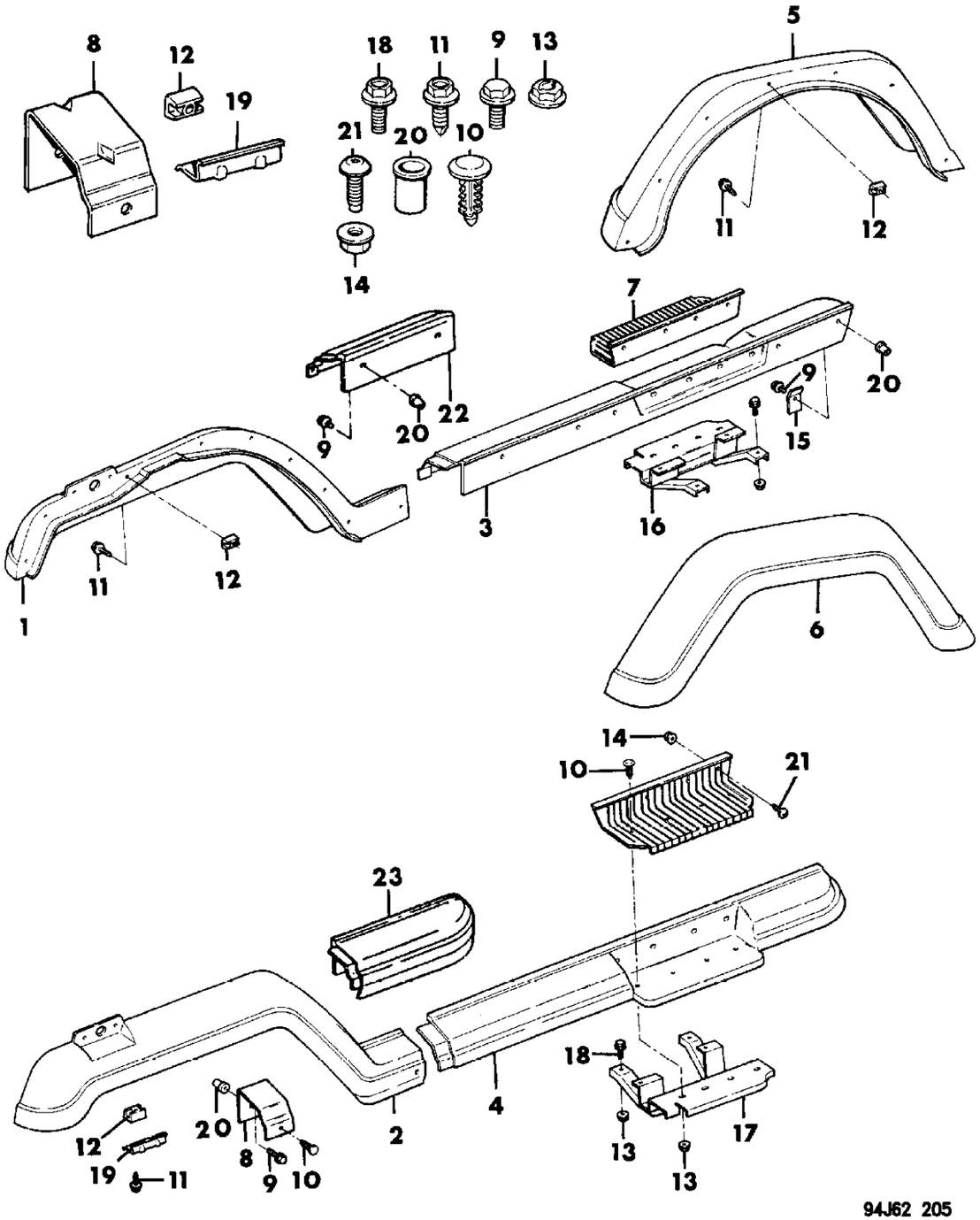

ITEM	PART NUMBER	QTY	BODY	MODEL	DESCRIPTION
1-2	5AH14-5 JX9	1			EXTENSION, Fender, P.A.R.
3-4					MOULDING, Body Side Step
As stock of colored mouldings is exhausted flat black parts will be provided P.A.R.					
	5AF94-5 JX9	1			Flat Black, P.A.R.
	5AF94-5 KC3	1			Blue Metallic
	5AF94-5 JJ6	1			Khaki Metallic
	5AF94-5 JW7	1			Bright White
	5AF94-5 JJ2	1			Malibu Yellow
5-6					EXTENSION, Rear Quarter
	5AH16-7 JX9	1		77	P.A.R.
	J575 7020-1	1		78	P.A.R., KDX - Egypt, Venezuela
7	5501 7500	2			APPLIQUE, Body Side Step
8	5500 8582	2			BRACKET, Mounting Front
9	J400 6906	8			BOLT, Bracket to Body and Moulding to Body
-		6			SCREW AND WASHER, Moulding to Body (154242 DNS, use 1/4-20) ***
10	J400 4919	2			FASTENER
11	J941 6223	32			SCREW
12	J400 4868	32			NUT
13	1150 2507	8			NUT
14	J400 4588	AR			NUT
15	5500 8583	AR			BRACKET, Mounting Rear
16-17	5500 9130-1	1			SUPPORT, Body Side Step
18	J400 5822	8			SCREW
19	5505 0157	2			BRACKET, Extension
20	J400 7101	8			NUTSERT, Bracket to Body and Moulding to Body ***
21	J400 7562	AR			SCREW
22-23	5500 7316-7	1			MOULDING, Body Side, P.A.R.
For Renegade Fender and Quarter Panel Extensions see Group 23 (SYJ)					

MODEL CODES:

72=2 DR Wagon
74=4 DR Wagon
77=Open Body 93" Whlbase
78=Open Body 103" Whlbase - Export
T=2WD
J,N=4WD
U=4WD (RHD)

BODY STYLES:

YJ=Wrangler (4X4) "S"
Weangler (4X4) SE
Wrangler (4X4) Sahara
Wrangler (4X4) Renegade
XJ=Cherokee SE
Cherokee Sport
Cherokee Country
ZJ=Grand Cherokee SE
Grand Cherokee Laredo
Grand Cherolee Limited
ZG=Grand Cherokee European
Y1=Wrangler
X1=Cherokee
Z1=Grand Cherokee
KDX=Vehicles

AR = Use as Required - = Non Illustrated Part P.A.R. = Paint as Required

« RETURN TO GROUP INDEX

DECALS AND NAMEPLATE YJ BODY
Figure EYJ-310

EYJ-310B

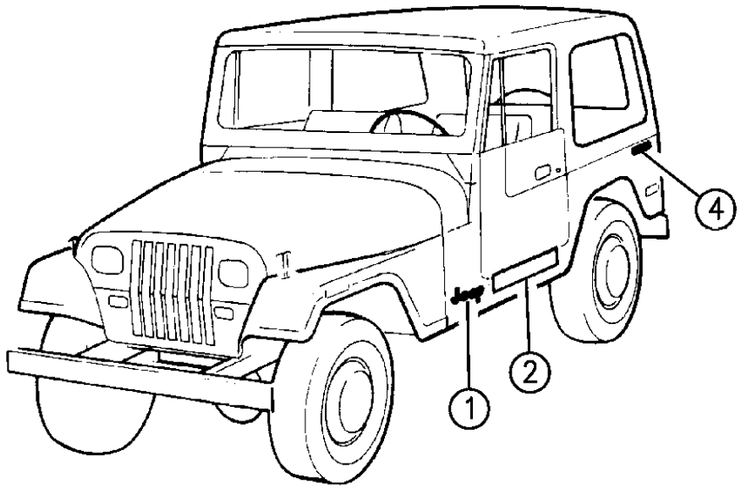

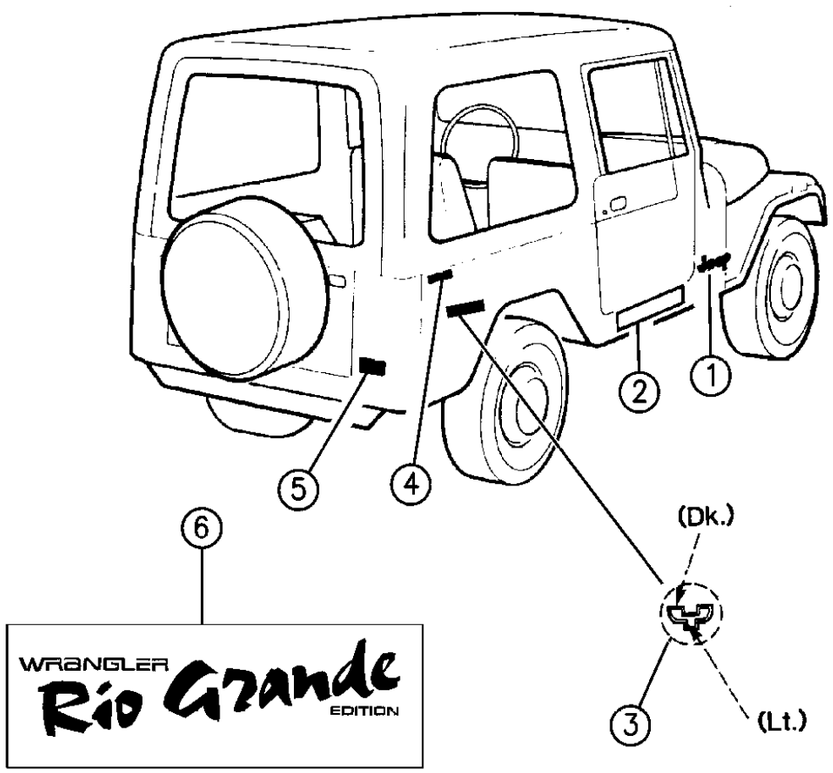

94J62 310

ITEM	PART NUMBER	QTY	BODY	MODEL	DESCRIPTION
1					DECAL, "Jeep"
	5AS1 5KA2	2			Light Silver
	5AS1 5KA9	2			Dark Silver
	5AS1 5LV2	2			Berry Red Metallic
	5AS1 5LJ4	2			Gold
	5AS1 5MU2	2			Medium Spice Metallic
	5AS1 5MQH	2			Turquoise
	5AS1 5MV5	2			Bright Red
	5AS1 5RK3	2			Sunset Gold
2	J576 5270	2			PROTECTOR, Scuff, Clear
3					DECAL, "YJ", CANADA
					Dual Color Decal
	5DT4 8MAL	1			Silver/Dark Silver
	5DT4 8MQC	1			Navy Blue or Dark Torquise/Dark Purple
	5DT4 8MVS	1			Light Silver/Bright Red
	5DT4 8RKV	1			Sunset Gold/Pepper Red
4					DECAL, "WRANGLER" (U.S.)
	5CN7 4KA2	2			Light Silver
	5CN7 4KA9	2			Dark Silver
	5CN7 4MQH	2			Turquoise
	5CN7 4MV5	2			Bright Red
5					DECAL, "4.0L High Output"
	5CL0 6KA2	1			Silver
	5CL0 6KA9	1			Dark Silver
	5CLO 6LJ4	1			Gold, EUROPE
	5CL0 6LV2	1			Berry Red Metallic
	5CL0 6MS1	1			Light Silver
	5CL0 6MQH	1			Turquoise
	5CL0 6MX9	1			Flat Black, KDX
	5CL0 6MU2	1			Medium Spice
6	5EJ1 4RKV	1			DECAL "Rio Grande" ***

MODEL CODES:

72=2 DR Wagon
74=4 DR Wagon
77=Open Body 93" Whlbase
78=Open Body 103" Whlbase - Export
T=2WD
J,N=4WD
U=4WD (RHD)

BODY STYLES:

YJ=Wrangler (4X4) "S"
Weangler (4X4) SE
Wrangler (4X4) Sahara
Wrangler (4X4) Renegade
XJ=Cherokee SE
Cherokee Sport
Cherokee Country
ZJ=Grand Cherokee SE
Grand Cherokee Laredo
Grand Cherolee Limited
ZG=Grand Cherokee European
Y1=Wrangler
X1=Cherokee
Z1=Grand Cherokee
KDX=Vehicles

AR = Use as Required - = Non Illustrated Part P.A.R. = Paint as Required

DECALS, BODYSIDE BASE VEHICLE W/SPORT TAPES YJ BODY
Figure EYJ-315

EYJ-315

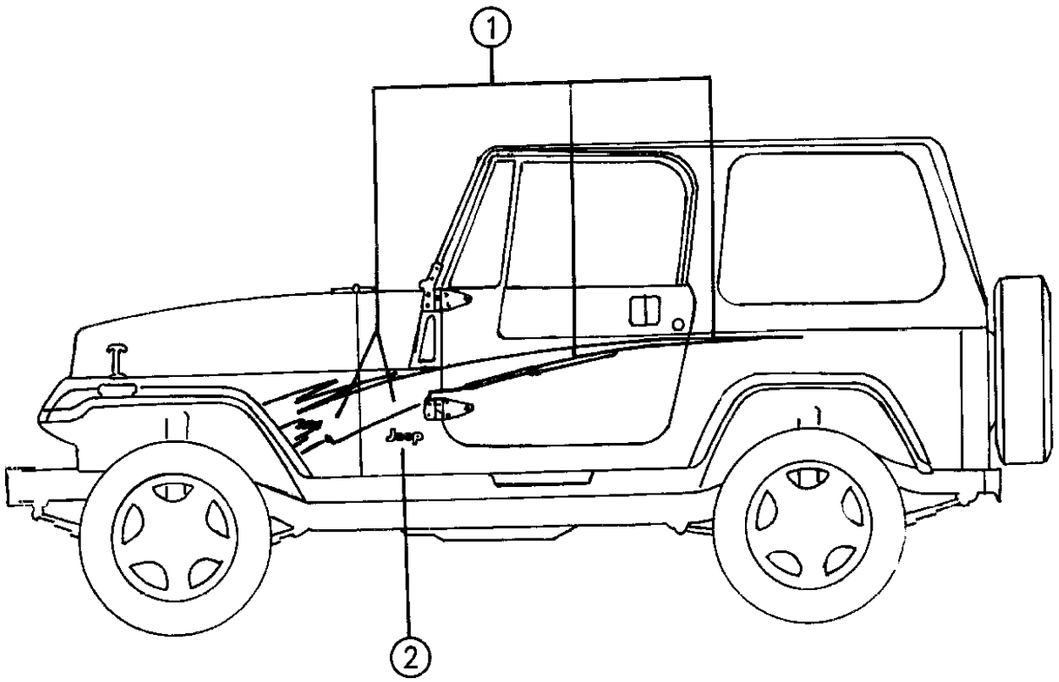

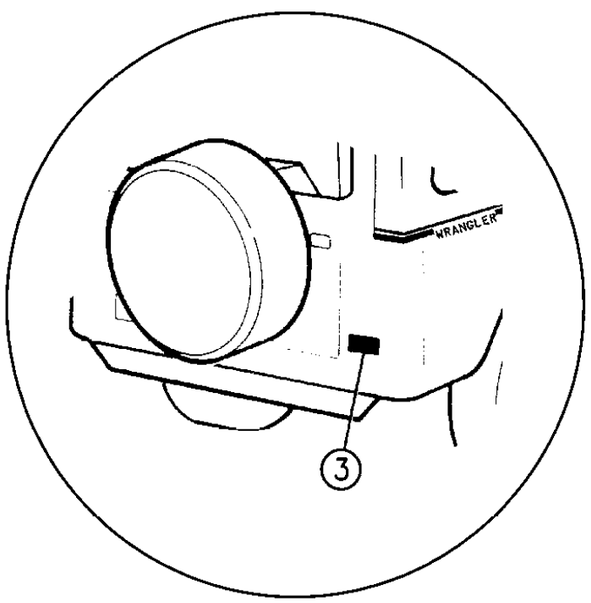

94J62 315

ITEM	PART NUMBER	QTY	BODY	MODEL	DESCRIPTION
1					PACKAGE, Bodyside Tape
	4723 532-3	1			Chartreuse Green/Turquoise/Dark Purple/Magenta
	4723 534-5	1			Radiant Silver/Light Silver/Dark Silver/ Bright Red
2					DECAL, "Jeep"
	5AS1 5MQH	2			Turquoise
	5AS1 5LV2	2			Berry Red
3					DECAL, "4.0 LITRE HIGH OUTPUT"
	5CL0 6MQH	1			Turquoise
	5CL0 6MS1	1			Light Silver

MODEL CODES:

72=2 DR Wagon
74=4 DR Wagon
77=Open Body 93" Whlbase
78=Open Body 103" Whlbase - Export
T=2WD
J,N=4WD
U=4WD (RHD)

BODY STYLES:

YJ=Wrangler (4X4) "S"
Weangler (4X4) SE
Wrangler (4X4) Sahara
Wrangler (4X4) Renegade

XJ=Cherokee SE
Cherokee Sport
Cherokee Country

ZJ=Grand Cherokee SE
Grand Cherokee Laredo
Grand Cherolee Limited
ZG=Grand Cherokee European

Y1=Wrangler
X1=Cherokee
Z1=Grand Cherokee
KDX=Vehicles

AR = Use as Required - = Non Illustrated Part P.A.R. = Paint as Required

« RETURN TO GROUP INDEX

DECALS, BODYSIDE AND REAR SAHARA YJ BODY
Figure EYJ-320

EYJ-320

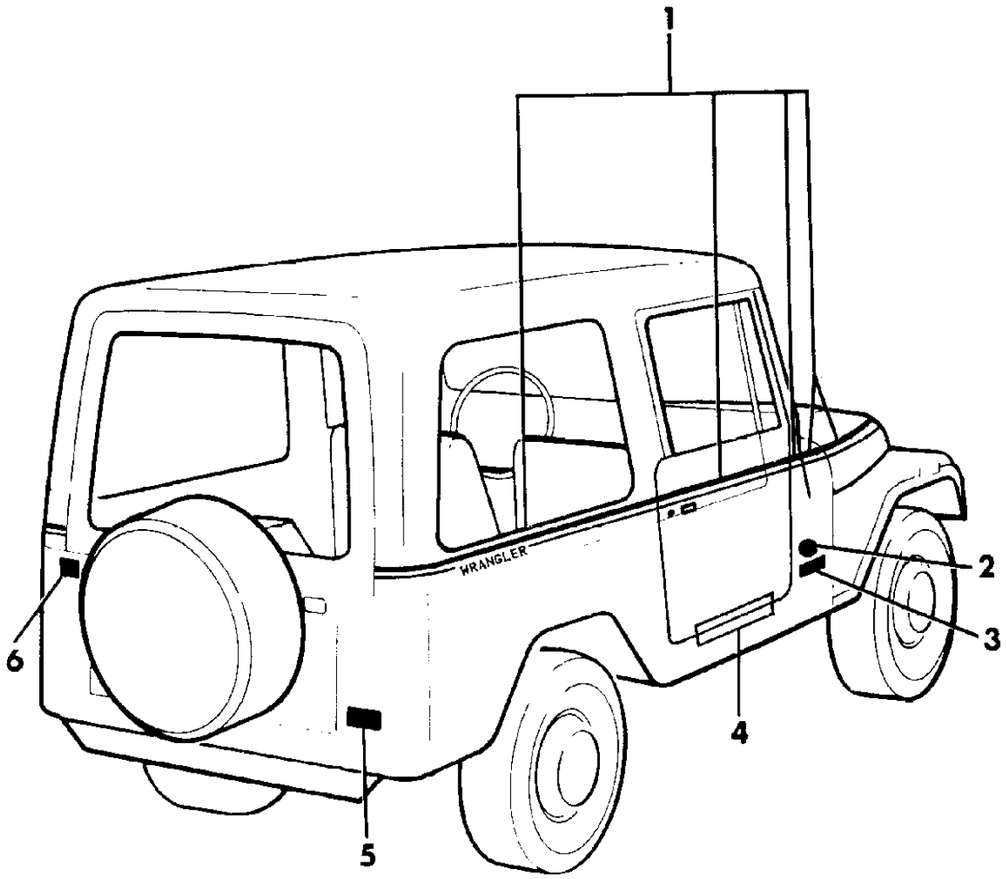

94J62 320

ITEM	PART NUMBER	QTY	BODY	MODEL	DESCRIPTION
1					PACKAGE, Bodyside Tapestripe
NOTE: USA and EUROPE packages have "Wrangler" graphics in the quarter panel, CANADA does not.					
	4713 948-9	1			Medium Spice Metallic/Berry Red Metallic (USA , EUROPE)
	4720 072-3	1			Dark Green/Medium Spice Metallic (USA, EUROPE)
	4746 874-5	1			Dark Green/Medium Spice Metallic (CANADA)
	4746 876-7	1			Spice Metallic/Berry (CANADA)
	4773 920-1	1			Moss Green/Spice (Canada)
	4773 922-3	1			Moss Green/Spice
2					DECAL, "SAHARA" Logo, High Gloss ***
	5AS6 0LTG	2			1994
	5AS6 0RJT	2			1995
3					DECAL, "Jeep"
	5AS1 5LV2	2			Berry Red Metallic
	5AS1 5MU2	2			Medium Spice Metallic
	5AS1 5LJ4	2			Gold
4	J576 5270	2			PROTECTOR, Door Opening, Clear
5					DECAL, "4.0L HIGH OUTPUT"
	5CL0 6LV2	1			Berry Red Metallic
	5CL0 6MU2	1			Medium Spice Metallic
6					DECAL, "YJ", CANADA
	5DT4 8MQC	1			Navy Blue/Turquoise
	5DT4 8MVS	1			Light Silver/Red
	5EM6 4RVF	1			DECAL, "Rio Grande" Canada ***

MODEL CODES:

72=2 DR Wagon
74=4 DR Wagon
77=Open Body 93" Whlbase
78=Open Body 103" Whlbase - Export
T=2WD
J,N=4WD
U=4WD (RHD)

BODY STYLES:

YJ=Wrangler (4X4) "S"
Weangler (4X4) SE
Wrangler (4X4) Sahara
Wrangler (4X4) Renegade
XJ=Cherokee SE
Cherokee Sport
Cherokee Country
ZJ=Grand Cherokee SE
Grand Cherokee Laredo
Grand Cherolee Limited
ZG=Grand Cherokee European
Y1=Wrangler
X1=Cherokee
Z1=Grand Cherokee
KDX=Vehicles

AR = Use as Required - = Non Illustrated Part P.A.R. = Paint as Required

DECALS, BODYSIDE AND REAR LIMITED, EUROPE YJ BODY
Figure EYJ-325

EYJ-325

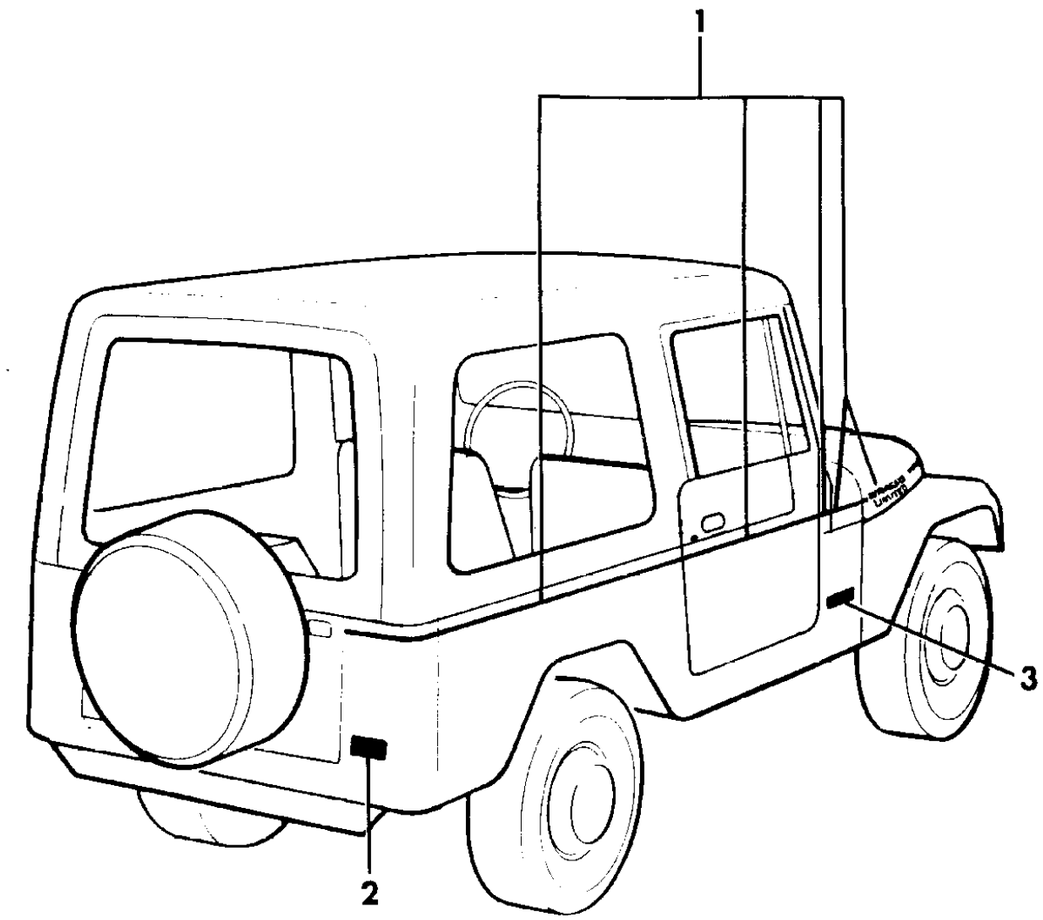

94J62 325

ITEM	PART NUMBER	QTY	BODY	MODEL	DESCRIPTION
1		1			TAPE PACKAGE, Bodyside, "WRANGLER LIMITED"
	4713 430-1				Gold
	4746 678-9				Silver
2		1			DECAL, "4.0L High Output"
	5CL0 6LJ4				Gold
	5CL0 6PA1				Silver
3		2			DECAL, "Jeep"
	5AS1 5LJ4				Gold
	5AS1 5PA1				Silver

MODEL CODES:

72=2 DR Wagon
74=4 DR Wagon
77=Open Body 93" Whlbase
78=Open Body 103" Whlbase - Export
T=2WD
J,N=4WD
U=4WD (RHD)

BODY STYLES:

YJ=Wrangler (4X4) "S"
Weangler (4X4) SE
Wrangler (4X4) Sahara
Wrangler (4X4) Renegade

XJ=Cherokee SE
Cherokee Sport
Cherokee Country

ZJ=Grand Cherokee SE
Grand Cherokee Laredo
Grand Cherolee Limited
ZG=Grand Cherokee European

Y1=Wrangler
X1=Cherokee
Z1=Grand Cherokee
KDX=Vehicles

AR = Use as Required - = Non Illustrated Part P.A.R. = Paint as Required

DECALS, BODYSIDE AND REAR RENEGADE YJ BODY
Figure EYJ-330

EYJ–330

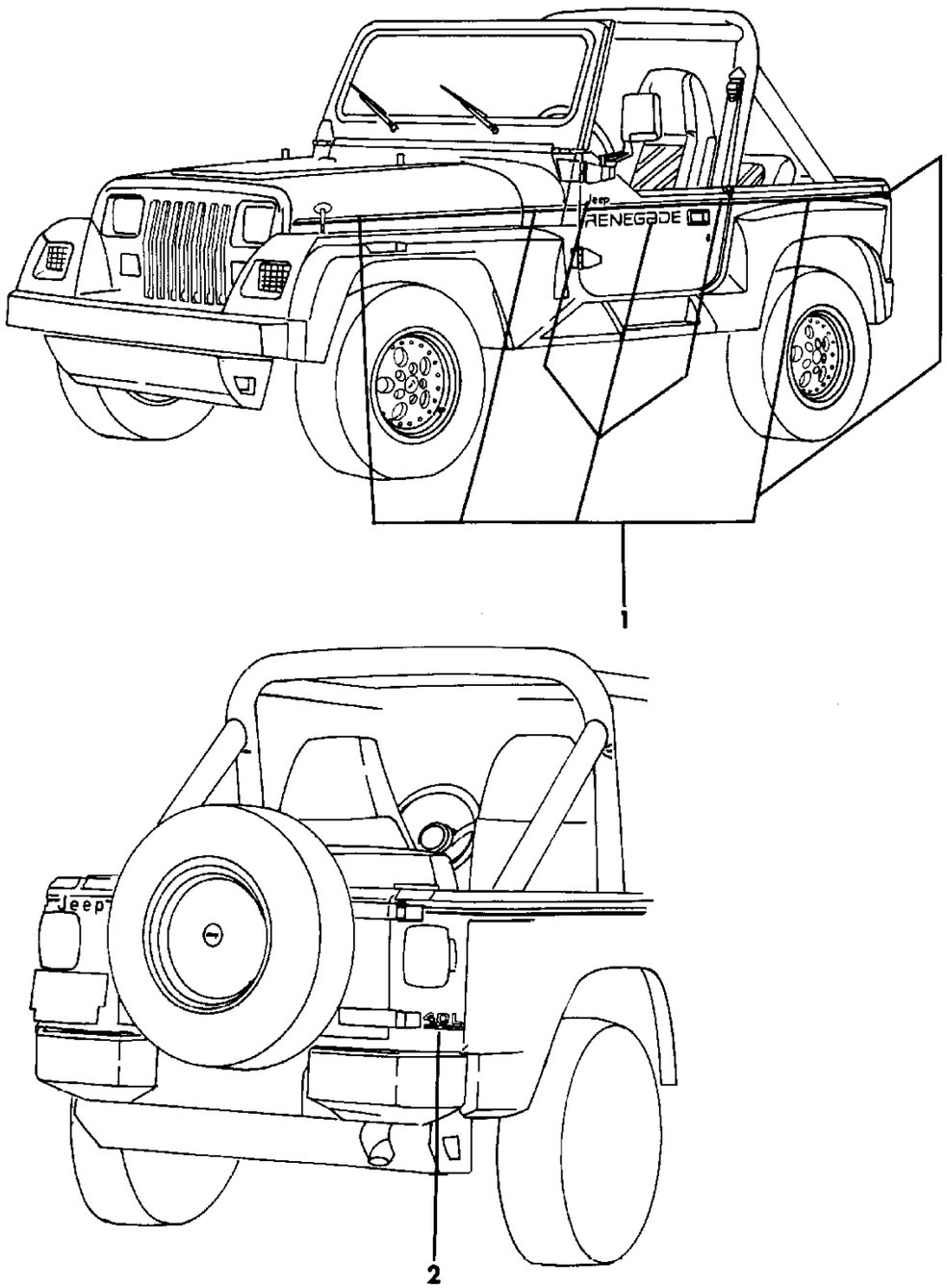

94J62 330

ITEM	PART NUMBER	QTY	BODY	MODEL	DESCRIPTION
1					TAPE PACKAGE, Bodyside and Rear Corner Panel
	4637 670-1	1			Black
	4419 510-1	1			Silver
	4720 142-3	1			Gold
The tapes above the tail lamps are included in the above packages.					
2					DECAL, Rear End "4.0L HIGH OUTPUT"
	4637 768	1			Black
	4419 520	1			Silver
	4720 134	1			Gold

MODEL CODES:

72=2 DR Wagon
74=4 DR Wagon
77=Open Body 93" Whlbase
78=Open Body 103" Whlbase - Export
T=2WD
J,N=4WD
U=4WD (RHD)

BODY STYLES:

YJ=Wrangler (4X4) "S"
Weangler (4X4) SE
Wrangler (4X4) Sahara
Wrangler (4X4) Renegade

XJ=Cherokee SE
Cherokee Sport
Cherokee Country

ZJ=Grand Cherokee SE
Grand Cherokee Laredo
Grand Cherolee Limited
ZG=Grand Cherokee European

Y1=Wrangler
X1=Cherokee
Z1=Grand Cherokee
KDX=Vehicles

AR = Use as Required - = Non Illustrated Part P.A.R. = Paint as Required

« RETURN TO GROUP INDEX

SAGIPARTS

GROUP-EXJ
EXTERIOR MOULDINGS AND ORNAMENTATION

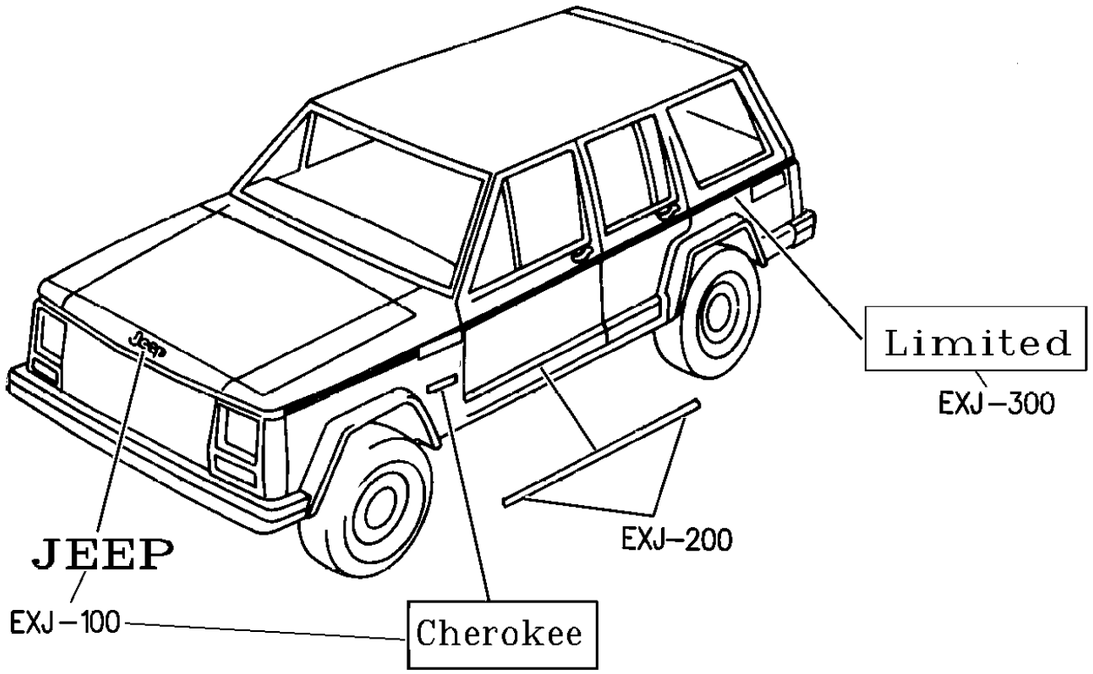

EXJ–100 NAMEPLATES	EXJ–200 MOULDING & ORNAMENTATION	EXJ–300 TAPE & DECALS	
Cherokee JEEP	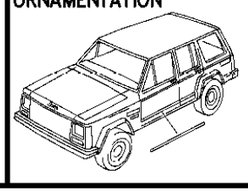	Limited	

GROUP EXJ - EXTERIOR ORNAMENTATION CHEROKEE

ILLUSTRATION TITLE	GROUP-FIG. NO.
NAMEPLATES	
NAMEPLATES XJ BODY	Fig. EXJ-110
MOULDINGS	
MOULDINGS, UPPER XJ BODY TWO DOOR	Fig. EXJ-210
MOULDING AND CLADDING, LOWER XJ BODY TWO DOOR	Fig. EXJ-220
MOULDINGS, UPPER XJ BODY FOUR DOOR	Fig. EXJ-230
MOULDING AND CLADDING, LOWER XJ BODY FOUR DOOR	Fig. EXJ-240
DECALS AND TAPE STRIPES	
DECALS AND TAPE STRIPES COUNTRY XJ BODY TWO DOOR	Fig. EXJ-335
DECALS AND TAPE STRIPES SPORT XJ BODY TWO DOOR	Fig. EXJ-340
DECALS AND TAPE STRIPES LIMITED XJ BODY FOUR DOOR	Fig. EXJ-345
DECALS AND TAPE STRIPES SPORT AND BASE XJ BODY FOUR DOOR	Fig. EXJ-347
DECALS AND TAPE STRIPES COUNTRY XJ BODY FOUR DOOR	Fig. EXJ-350

NAMEPLATES XJ BODY
Figure EXJ-110

EXJ-110

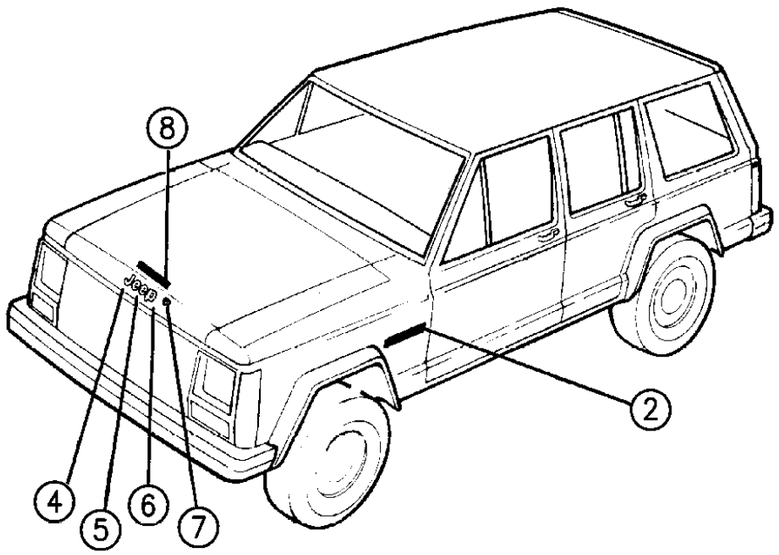

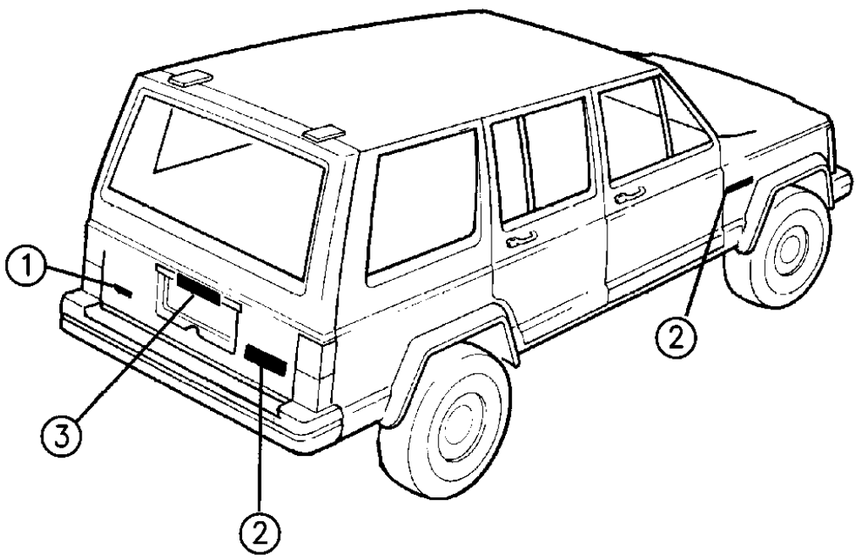

94J63 110

ITEM	PART NUMBER	QTY	BODY	MODEL	DESCRIPTION
1					NAMEPLATE, Liftgate
					"4.0 LITRE HIGH OUTPUT"
	5507 4600	1			Gold
	5529 5280	1			Silver
	5529 5281	1			Champagne
	5523 5170	1			Pearlstone
	5517 5347	1			2.5 Turbo Diesel, Silver/Chrome
	5517 5666	1			2.5 Turbo Diesel, Gold
					"Turbo Diesel", EUROPE
	5502 1078	1			Gold
	5529 5257	1			Silver
	5517 5346	1			Pearlstone
	5523 5166	1			Champagne
2					NAMEPLATE, "CHEROKEE", Fender or Liftgate
	5529 4991	2			Gold, EUROPE
	5529 5252	2			Silver
	5529 5251	2			Champagne
	5523 5168	2			Pearlstone
3					NAMEPLATE, "Jeep", on license plate visor
	5501 8682	1			Gold
	5529 5254	1			Silver
	5529 5253	1			Champagne
	5523 5169	1			Pearlstone
4					NAMEPLATE, "J"
	5529 4918	1			Gold
5					NAMEPLATE, "e"
	5529 4919	2			Gold
6					NAMEPLATE, "p"
	5529 4920	1			Gold
NOTE: For items 6, 7 and 8. As stock of individual letters is exhausted the following letter sets are available.					
NOTE: Only letter sets are available.					
		1			SET, Letter "Jeep" ***
	5529 5250	1			Silver
	5529 5249	1			Champagne
	5523 5167	1			Pearlstone
	5529 4921	1			G.O.P., Gold
7	1150 2557	AR			NUT
8	5501 2986	1			NAMEPLATE, "Jeep", KDX- China, Turkey, Venezuela,

MODEL CODES:

72=2 DR Wagon
74=4 DR Wagon
77=Open Body 93" Whlbase
78=Open Body 103" Whlbase - Export
T=2WD
J,N=4WD
U=4WD (RHD)

BODY STYLES:

YJ=Wrangler (4X4) "S"
Weangler (4X4) SE
Wrangler (4X4) Sahara
Wrangler (4X4) Renegade

XJ=Cherokee SE
Cherokee Sport
Cherokee Country

ZJ=Grand Cherokee SE
Grand Cherokee Laredo
Grand Cherolee Limited
ZG=Grand Cherokee European

Y1=Wrangler
X1=Cherokee
Z1=Grand Cherokee
KDX=Vehicles

AR = Use as Required - = Non Illustrated Part P.A.R. = Paint as Required

MOULDINGS, UPPER XJ BODY TWO DOOR
Figure EXJ-210

EXJ-210

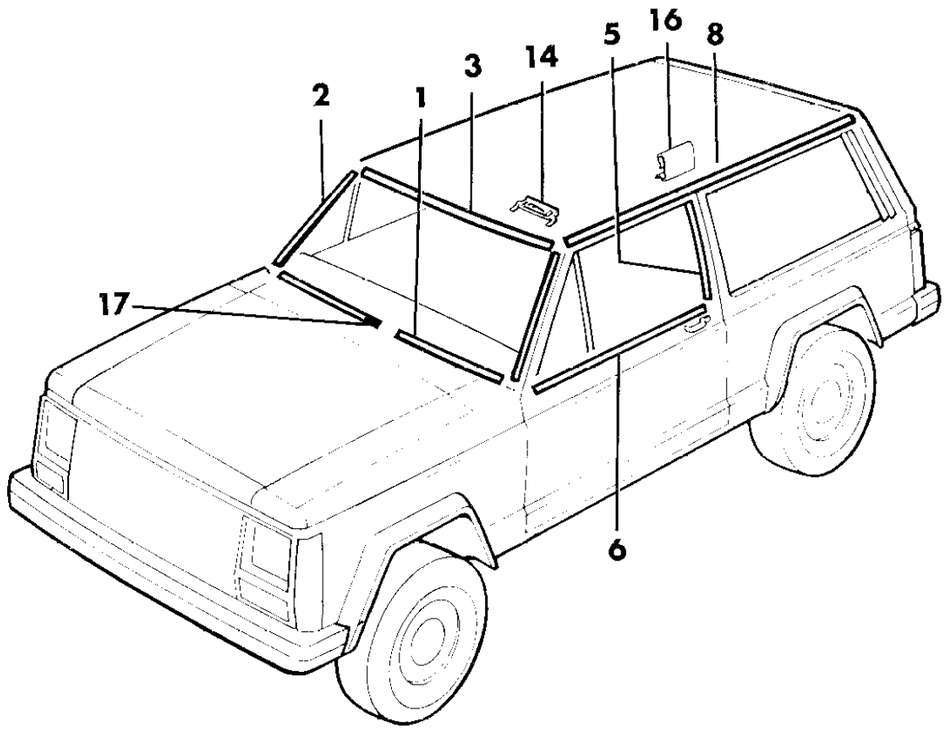

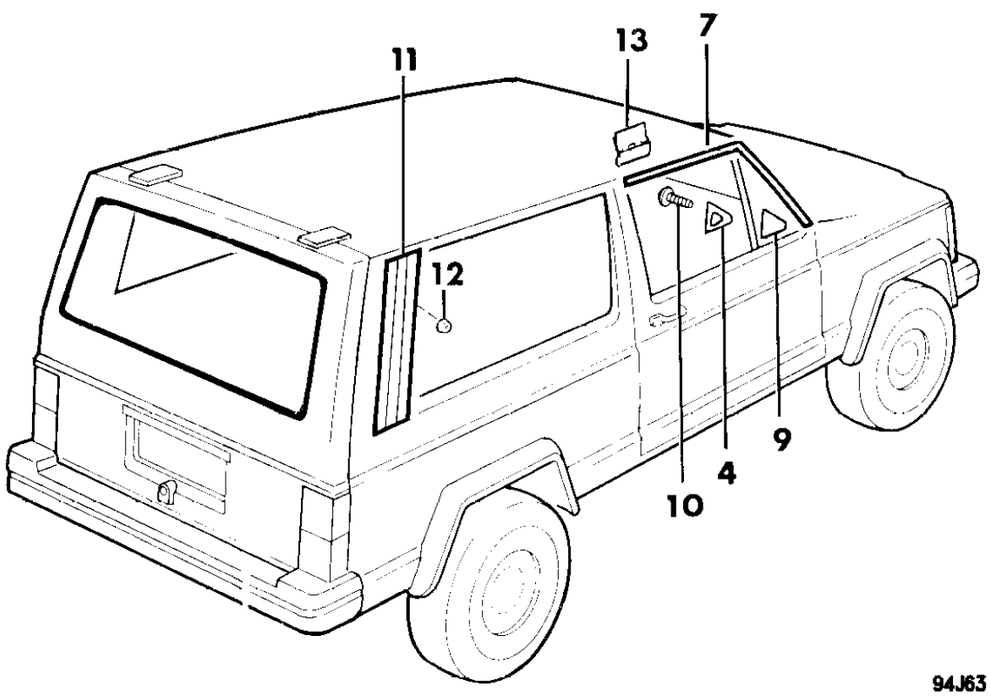

ITEM	PART NUMBER	QTY	BODY	MODEL	DESCRIPTION
1					MOULDING, Windshield
	5502 6724-5	1			Black, Up to 2-7-94
	5502 6726-7	1			Bright, Up to 2-7-94
	5523 5194	1			1-Piece, Use After 2-7-94
	5502 8214	1			SPACER, Support
NOTE: The right moulding includes the cover for the moulding joint.					
2					MOULDING, Windshield
	5500 0538-9	1			Black, Up to 2-7-94
	5500 0546-7	1			Bright, Up to 2-7-94
	5517 5229	1			1-Piece, Use After 2-7-94
	5502 8214	1			SPACER, Support
3					MOULDING, Windshield
	5500 0536	1			Black, Up to 2-7-94
	5500 0544	1			Bright, Up to 2-7-94
	5502 8214	1			SPACER, Support
4	5500 5430-1	1			GASKET
5	5513 4752-3	1			MOULDING, Door, Black
6					PACKAGE, Door Belt Moulding
	4746 552	1			Right
	4746 553	1			Left
7	5513 4748-9	1			MOULDING, Door, Black
8					MOULDING, Drip Rail
	5501 3656-7	1			Bright
	5501 5886-7	1			Black
9	5500 5312-3	1			COVER, (LESS MIRROR)
10	3420 1957	4			SCREW
11	5502 5788-9	1			APPLIQUE, Rear Quarter, P.A.R.
12	1150 1854	AR			NUT, Applique Attaching
13					CLIP, Door Moulding
	5500 5384	2			height = 24mm
	5500 5383	AR			height = 27mm
14					CLIP, Windshield Moulding Attaching
	5513 4797	28			Production/Service Part
16	3500 2115	AR			CLIP, Drip Rail Attaching
17	5500 6386	1			COVER, Moulding Joint (supplied in bright, P.A.R) (this cover is included in the right windshield moulding)

MODEL CODES:

72=2 DR Wagon
74=4 DR Wagon
77=Open Body 93" Whlbase
78=Open Body 103" Whlbase - Export
T=2WD
J,N=4WD
U=4WD (RHD)

BODY STYLES:

YJ=Wrangler (4X4) "S"
Weangler (4X4) SE
Wrangler (4X4) Sahara
Wrangler (4X4) Renegade
XJ=Cherokee SE
Cherokee Sport
Cherokee Country
ZJ=Grand Cherokee SE
Grand Cherokee Laredo
Grand Cherolee Limited
ZG=Grand Cherokee European
Y1=Wrangler
X1=Cherokee
Z1=Grand Cherokee
KDX=Vehicles

AR = Use as Required - = Non Illustrated Part P.A.R. = Paint as Required

« RETURN TO GROUP INDEX

MOULDING AND CLADDING, LOWER XJ BODY TWO DOOR
Figure EXJ-220

EXJ-220

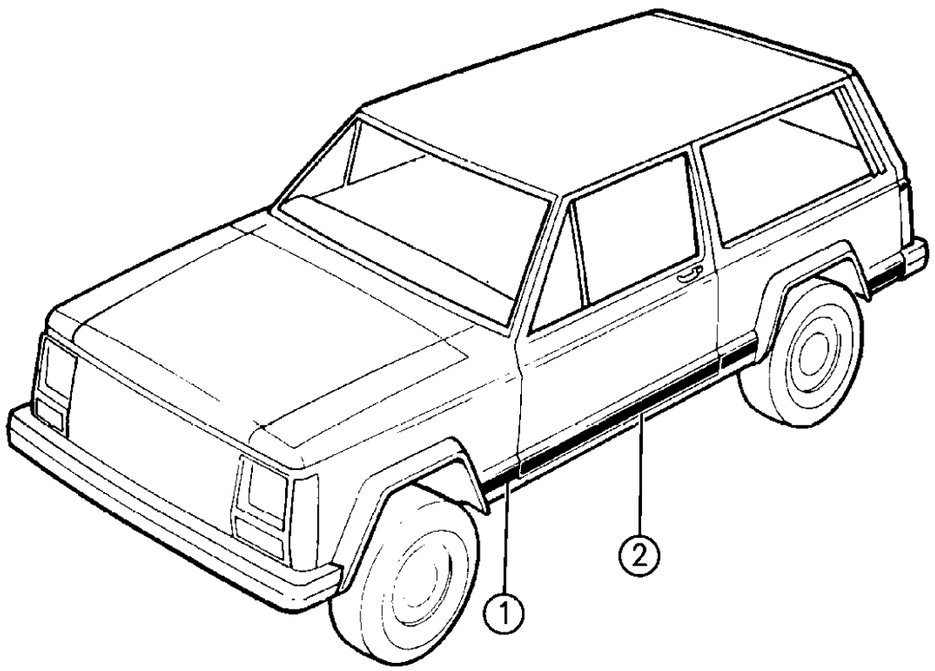

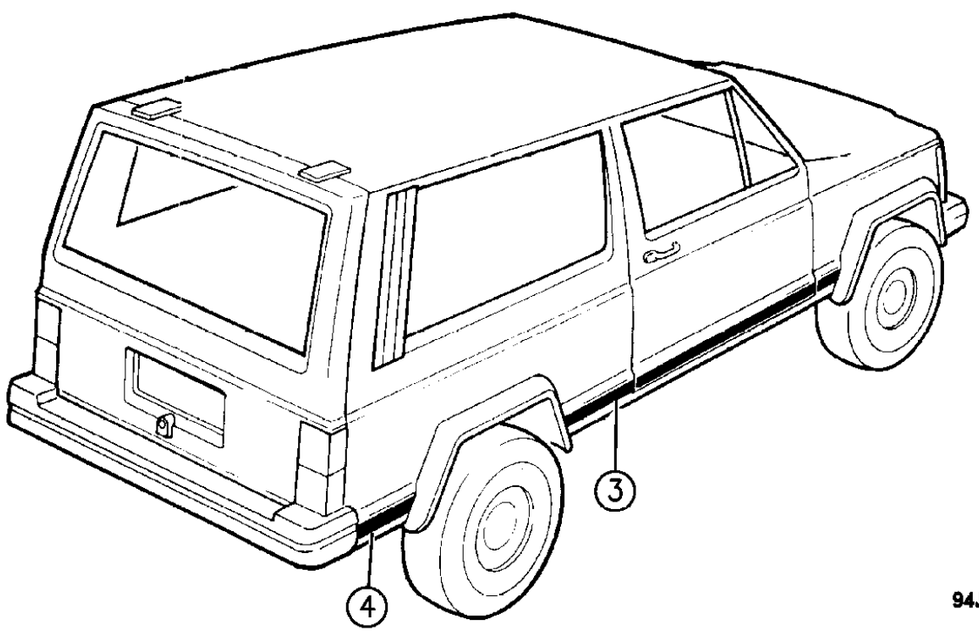

94J63 220

ITEM	PART NUMBER	QTY	BODY	MODEL	DESCRIPTION
NOTE: This illustration represents moulding and cladding. Moulding is 2 3/8" wide and cladding is 5 3/8" wide.					
1					MOULDING or CLADDING, Fender ***
	5CX92-3 LS7	1			Cladding, P.A.R.
	5DA02-3 LXZ	1			Moulding, Black/Bright
	5DA02-3 MXR	1			Moulding, Black/Red
	5DA02-3 MX9	1			Moulding, Black/Black
2					MOULDING or Cladding, Door ***
	5CX96-7 MV3	1			Cladding, P.A.R.
	5AJ54-5 JXZ	1			Moulding, Black/Bright
	5AJ54-5 MXR	1			Moulding, Black/Red
	5AJ54-5 MX9	1			Moulding, Black/Black
3					MOULDING or CLADDING, Quarter Panel Front ***
	5CY00-1 LS7	1			Cladding, P.A.R.
	5CY00-1 MV3	1			Cladding, P.A.R
	5DA04-5 LXZ	1			Black/Bright
	5DA04-5 MXR	1			Moulding, Black/Red
	5DA04-5 MX9	1			Moulding, Black/Black
4					MOULDING or CLADDING, Quarter Panel Rear (This moulding is 2 3/8" wide and cladding is 4 1/8" wide) ***
	5CY04-5 LS7	1			Cladding, P.A.R.
	5DA08-9 LXZ	1			Moulding, Black/Bright
	5DA08-9 MXR	1			Moulding, Black/Red ***
	5DA08-9 MX9	1			Moulding, Black/Black

NOTE: If cladding is not the correct color for the model year it must be painted. These are the only part numbers that are released for service.

MODEL CODES:

72=2 DR Wagon	77=Open Body 93" Whlbase	T=2WD	U=4WD (RHD)
74=4 DR Wagon	78=Open Body 103" Whlbase - Export	J,N=4WD	

BODY STYLES:

YJ=Wrangler (4X4) "S"	XJ=Cherokee SE	ZJ=Grand Cherokee SE	Y1=Wrangler
Weangler (4X4) SE	Cherokee Sport	Grand Cherokee Laredo	X1=Cherokee
Wrangler (4X4) Sahara	Cherokee Country	Grand Cherolee Limited	Z1=Grand Cherokee
Wrangler (4X4) Renegade		ZG=Grand Cherokee European	KDX=Vehicles

AR = Use as Required - = Non Illustrated Part P.A.R. = Paint as Required

« RETURN TO GROUP INDEX

MOULDINGS, UPPER XJ BODY FOUR DOOR
Figure EXJ-230

EXJ-230

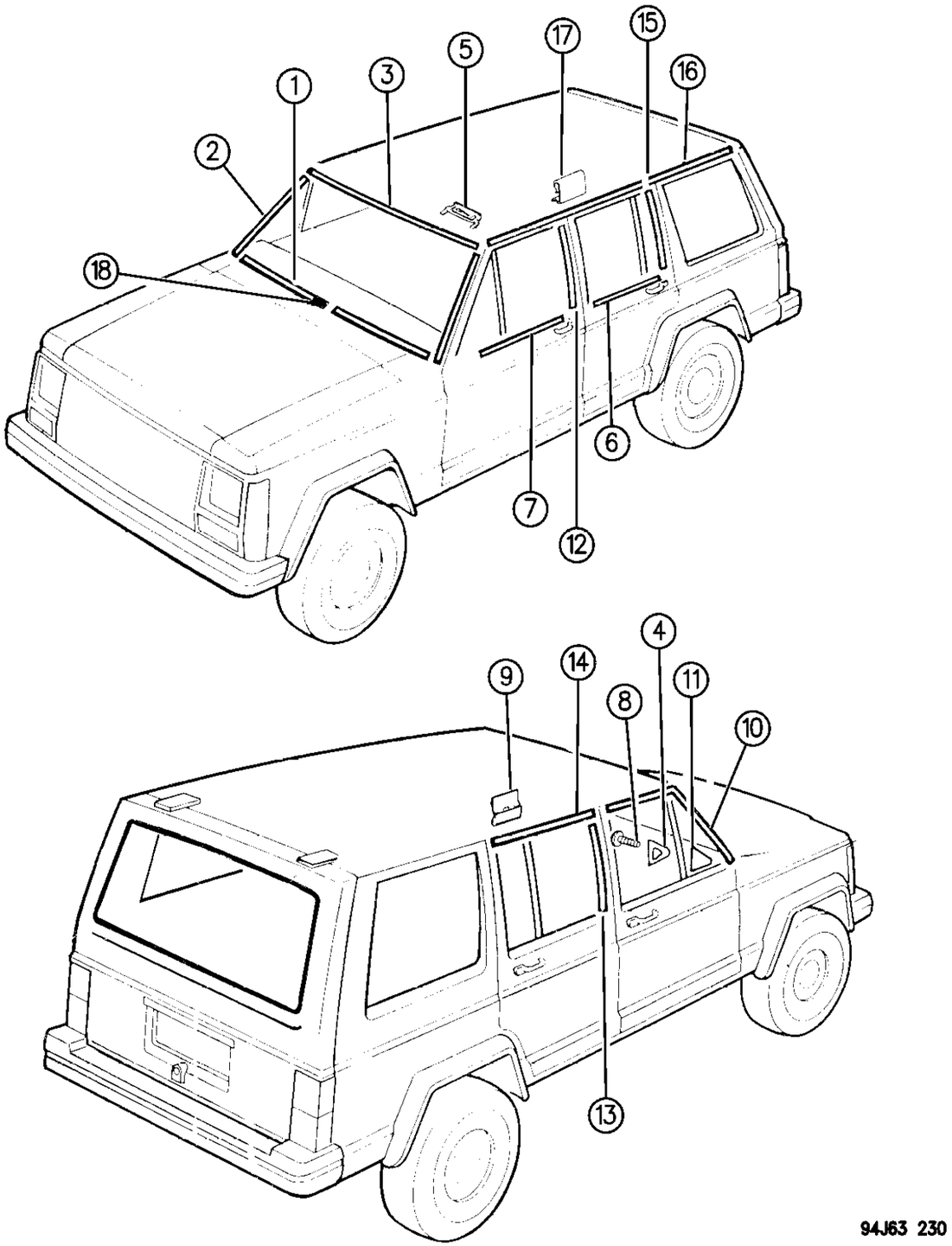

ITEM	PART NUMBER	QTY	BODY	MODEL	DESCRIPTION
1					MOULDING, Windshield, Lower
	5502 6724-5	1			Black, Up to 2-7-94
	5502 6726-7	1			Bright, Up to 2-7-94
	5523 5194	1			1-Piece, Use After 2-7-94
	5502 8214	1			SPACER, Support
NOTE: The right moulding includes the cover for the moulding joint.					
2					MOULDING, Windshield, Side
	5500 0538-9	1			Black, Up to 2-7-94
	5500 0546-7	1			Bright, Up to 2-7-94
	5517 5229	1			1-Piece, Use After 2-7-94
	5502 8214	1			SPACER, Support
3					MOULDING, Windshield, Upper
	5500 0536	1			Black, Up to 2-7-94
	5500 0544	1			Bright, Up to 2-7-94
	5517 5229	1			1-Piece, Use After 2-7-94
	5502 8214	1			SPACER, Support
4	5500 5430-1	1			GASKET
5					CLIP, Windshield Moulding Attaching
	5513 4797	28			Production/Service Part
6	4746 612	2			PACKAGE, Rear Door Belt Moulding
7					PACKAGE, Front Door Belt Moulding
	4746 548	1			Right
	4746 549	1			Left
8	3420 1957	4			SCREW
9					CLIP, Moulding Attaching
	5500 5384	4			height = 24mm
	5500 5383	AR			height = 27mm
10	5513 4750-1	1			MOULDING, Door, Black
11	5500 5312-3	1			COVER, Less Mirror
12	5513 4752-3	1			MOULDING, Door, Black
13	5500 5290-1	1			MOULDING, Door, Black
14	5513 4754	2			MOULDING, Door, Black
15	5513 4756-7	1			MOULDING, Door, Black
16					MOULDING, Drip Rail
	5501 3656-7	1			Bright
	5501 5886-7	1			Black
17	3500 2115	AR			CLIP, Drip Rail Attaching
18	5500 6386	1			COVER, Moulding Joint (only supplied in bright, P.A.R.) (this cover is included in the right windshield moulding)

MODEL CODES:

72=2 DR Wagon
74=4 DR Wagon
77=Open Body 93" Whlbase
78=Open Body 103" Whlbase - Export
T=2WD
J,N=4WD
U=4WD (RHD)

BODY STYLES:

YJ=Wrangler (4X4) "S"
Weangler (4X4) SE
Wrangler (4X4) Sahara
Wrangler (4X4) Renegade
XJ=Cherokee SE
Cherokee Sport
Cherokee Country
ZJ=Grand Cherokee SE
Grand Cherokee Laredo
Grand Cherolee Limited
ZG=Grand Cherokee European
Y1=Wrangler
X1=Cherokee
Z1=Grand Cherokee
KDX=Vehicles

AR = Use as Required - = Non Illustrated Part P.A.R. = Paint as Required

« RETURN TO GROUP INDEX

MOULDING AND CLADDING, LOWER XJ BODY FOUR DOOR
Figure EXJ-240

EXJ-240C

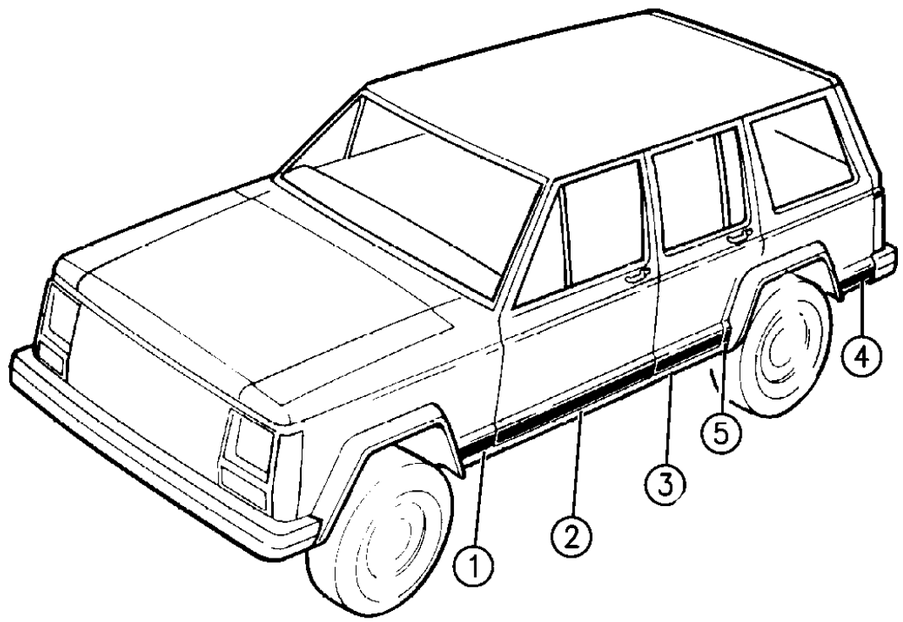

94J63 240

ITEM	PART NUMBER	QTY	BODY	MODEL	DESCRIPTION
NOTE: Moulding is 2 3/8" Wide, Cladding is 5 3/8" Wide.					
1					MOULDING or CLADDING, Fender ***
	5CX92-3 LS7	1			Cladding, P.A.R.
	5DA02-3 LXZ	1			Moulding, Black/Bright
	5DA02-3 MXR	1			Moulding, Black/Red
	5DA02-3 MX9	1			Moulding, Black/Black
2					MOULDING or CLADDING, Front Door ***
	5CX94-5 LS7	1			Cladding, P.A.R.
	5AJ58-9 JXZ	1			Moulding, Black/Bright
	5AJ58-9 MXR	1			Moulding, Black/Red
	5AJ58-9 MX9	1			Moulding, Black/Black
3					MOULDING or CLADDING, Rear Door ***
	5CX98-9 LS7	1			Cladding, P.A.R.
	5DA06-7 LXZ	1			Moulding, Black/Bright
	5DA06-7 MXR	1			Moulding, Black/Red
	5DA06-7 MX9	1			MOULDING, Black/Black
4					MOULDING or CLADDING, Quarter Panel Rear (this moulding is 2 3/8" wide and Cladding is 4 1/8" wide) ***
	5CY04-5 LS7	1			Cladding, P.A.R.
	5DA08-9 LXZ	1			Moulding, Black/Bright
	5DA08-9 MXR	1			Moulding, Black/Red
	5DA08-9 MX9	1			Moulding, Black/Black
5					MOULDING or CLADDING, Quarter Panel Front ***
	5CY02-3 LS7	1			Cladding, P.A.R.
NOTE: The only moulding used in this location applies to European vehicles.					
					MOULDING, Europe
	5DA16-7 LXZ	1			Black/Bright
	5DA16-7 MX9	1			Black/Black
	5DA16-7 RXR	1			Black/Red

MODEL CODES:

72=2 DR Wagon
74=4 DR Wagon
77=Open Body 93" Whlbase
78=Open Body 103" Whlbase - Export
T=2WD
J,N=4WD
U=4WD (RHD)

BODY STYLES:

YJ=Wrangler (4X4) "S"
Weangler (4X4) SE
Wrangler (4X4) Sahara
Wrangler (4X4) Renegade
XJ=Cherokee SE
Cherokee Sport
Cherokee Country
ZJ=Grand Cherokee SE
Grand Cherokee Laredo
Grand Cherolee Limited
ZG=Grand Cherokee European
Y1=Wrangler
X1=Cherokee
Z1=Grand Cherokee
KDX=Vehicles

AR = Use as Required - = Non Illustrated Part P.A.R. = Paint as Required

DECALS AND TAPE STRIPES COUNTRY XJ BODY TWO DOOR
Figure EXJ-335

EXJ-335

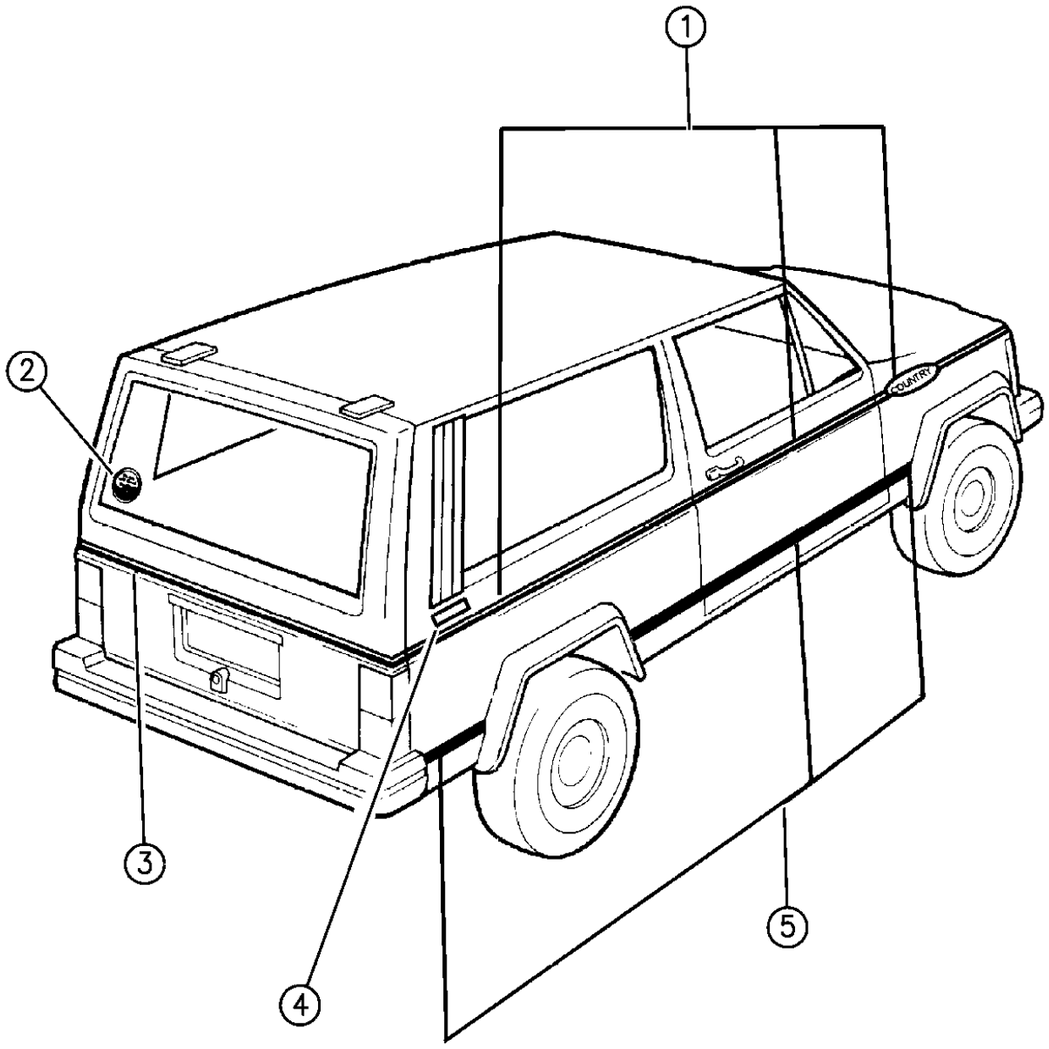

94J63 335

ITEM	PART NUMBER	QTY	BODY	MODEL	DESCRIPTION
1					TAPE PACKAGE, Bodyside Upper (dual stripe with country graphics in fender tape)
	4723 420-1	1			Champagne
	4723 422-3	1			Black
	4741 470-1	1			Silver
	4773 940-1	1			Pearlstone
2					DECAL ***
	5501 6564	1			"Off Road Vehicle Package"
	5FG1 6SXW	1			"Up Country Suspension Group"
3					DECAL, Liftgate (dual stripe)
	5DE1 4MV3	1			Champagne
	5DE1 4MX9	1			Flat Black
4					DECAL, Quarter Panel, "4X4"
					1994-95
	5DD9 6RV1	2			Pearlstone
	5DD9 6MJ4	2			Gold Metallic
	5DD9 6MA1	2			Quartz
	5DD9 6MV3	2			Champagne
	5DD9 6MX9	2			Flat Black
					1996
	5FM6 2SA1	2			Silver
	5FM6 2SJ4	2			Gold
	5FM6 2SV1	2			Peartstone
	5FM6 2SX9	2			Black
NOTE: Item 5 - "Blackout Tapes" are only used on vehicles with bodyside cladding.					
5					TAPE PACKAGE, Bodyside "Blackout Tape" ***
	4723 426-7	1			Champagne
	4723 428-9	1			Flat Black
	4741 432-3	1			Silver
	4773 972-3	1			Pearlstone

MODEL CODES:

72=2 DR Wagon
74=4 DR Wagon
77=Open Body 93" Whlbase
78=Open Body 103" Whlbase - Export
T=2WD
J,N=4WD
U=4WD (RHD)

BODY STYLES:

YJ=Wrangler (4X4) "S"
Weangler (4X4) SE
Wrangler (4X4) Sahara
Wrangler (4X4) Renegade

XJ=Cherokee SE
Cherokee Sport
Cherokee Country

ZJ=Grand Cherokee SE
Grand Cherokee Laredo
Grand Cherolee Limited
ZG=Grand Cherokee European

Y1=Wrangler
X1=Cherokee
Z1=Grand Cherokee
KDX=Vehicles

AR = Use as Required - = Non Illustrated Part P.A.R. = Paint as Required

DECALS AND TAPE STRIPES SPORT XJ BODY TWO DOOR
Figure EXJ-340

EXJ-340

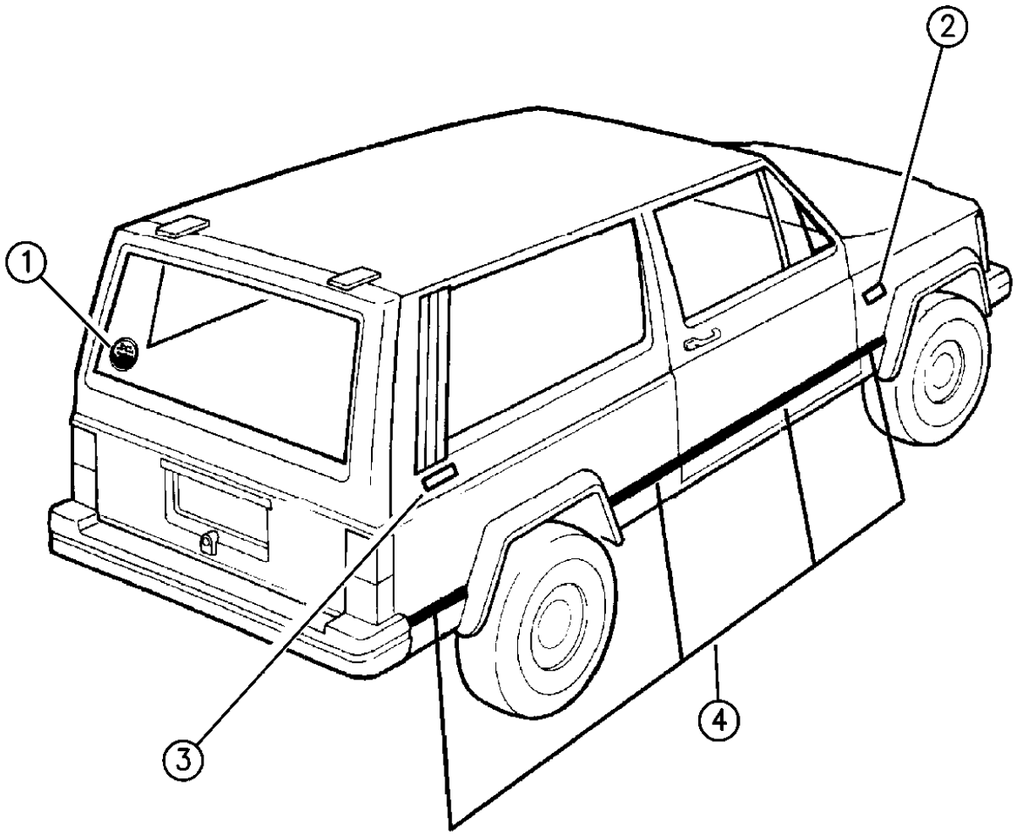

94J63 340

ITEM	PART NUMBER	QTY	BODY	MODEL	DESCRIPTION
1	5501 6564	1			DECAL, "Off Road Vehicle Package"
2					DECAL, Fender, "SPORT"
	5CW9 0MA1	2			Quartz
	5CW9 0MX9	2			Flat Black
3					DECAL, Quarter Panel, "4X4"
					1994-95
	5DD9 6MA1	2			Quartz
	5DD9 6MX9	2			Flat Black
					1996
	5FM6 2SA1	2			Silver
	5FM6 2SJ4	2			Gold
	5FM6 2SV1	2			Pearlstone
	5FM6 2SX9	2			Black
NOTE: Item 4 - "Blackout Tapes" are only used on vehicles with bodyside cladding.					
4					TAPE PACKAGE, Bodyside "Blackout Tape"
	4723 426-7	1			Champagne
	4723 428-9	1			Flat Black
	4741 432-3	1			Silver
	4773 972-3	1			Pearlstone
					TAPE PACKAGE "Jamboree" EXPORT ***
	4741 004	1			Right
	4741 005	1			Left

MODEL CODES:

72=2 DR Wagon
74=4 DR Wagon
77=Open Body 93" Whlbase
78=Open Body 103" Whlbase - Export
T=2WD
J,N=4WD
U=4WD (RHD)

BODY STYLES:

YJ=Wrangler (4X4) "S"
Weangler (4X4) SE
Wrangler (4X4) Sahara
Wrangler (4X4) Renegade
XJ=Cherokee SE
Cherokee Sport
Cherokee Country
ZJ=Grand Cherokee SE
Grand Cherokee Laredo
Grand Cherolee Limited
ZG=Grand Cherokee European
Y1=Wrangler
X1=Cherokee
Z1=Grand Cherokee
KDX=Vehicles

AR = Use as Required - = Non Illustrated Part P.A.R. = Paint as Required

« RETURN TO GROUP INDEX

DECALS AND TAPE STRIPES LIMITED XJ BODY FOUR DOOR
Figure EXJ-345

EXJ-345

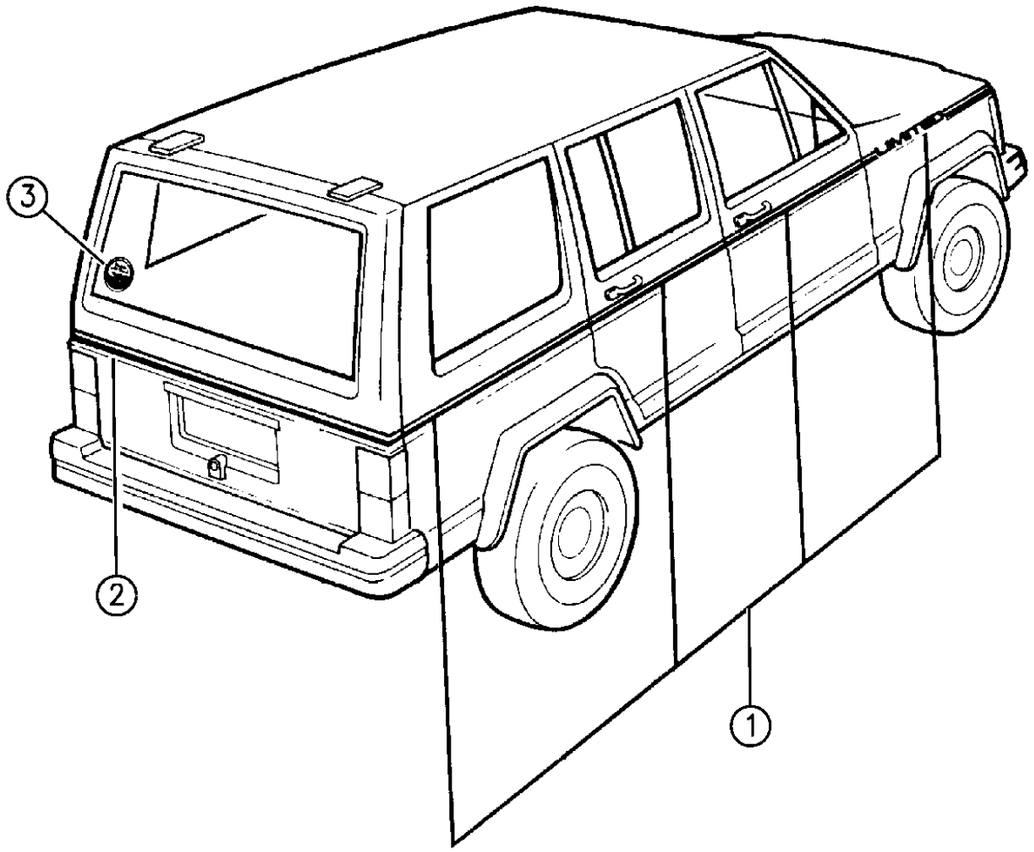

94J63 345

ITEM	PART NUMBER	QTY	BODY	MODEL	DESCRIPTION
1					PACKAGE, Bodyside Tape
					1994-95
	4638 802-3	1			Gold
	4713 944-5	1			Light Quartz
	4762 892-3	1			Black
					1996
	4864 474-5	1			Silver
	4864 476-7	1			Gold
2					DECAL, Liftgate
					1994-95
	5BM2 8KJ4	1			Gold
	5BM2 8LA1	1			Light Quartz
	5BM2 8PX9	1			Black
					1996
	5FG4 8SA1	1			Silver
	5FG4 8SJ4	1			Gold
3	5501 6564	1			DECAL, "Off Road Vehicle Package"

MODEL CODES:

72=2 DR Wagon
74=4 DR Wagon
77=Open Body 93" Whlbase
78=Open Body 103" Whlbase - Export
T=2WD
J,N=4WD
U=4WD (RHD)

BODY STYLES:

YJ=Wrangler (4X4) "S"
Weangler (4X4) SE
Wrangler (4X4) Sahara
Wrangler (4X4) Renegade

XJ=Cherokee SE
Cherokee Sport
Cherokee Country

ZJ=Grand Cherokee SE
Grand Cherokee Laredo
Grand Cherolee Limited
ZG=Grand Cherokee European

Y1=Wrangler
X1=Cherokee
Z1=Grand Cherokee
KDX=Vehicles

AR = Use as Required - = Non Illustrated Part P.A.R. = Paint as Required

« RETURN TO GROUP INDEX

DECALS AND TAPE STRIPES SPORT AND BASE XJ BODY FOUR DOOR
Figure EXJ-347

EXJ–347A

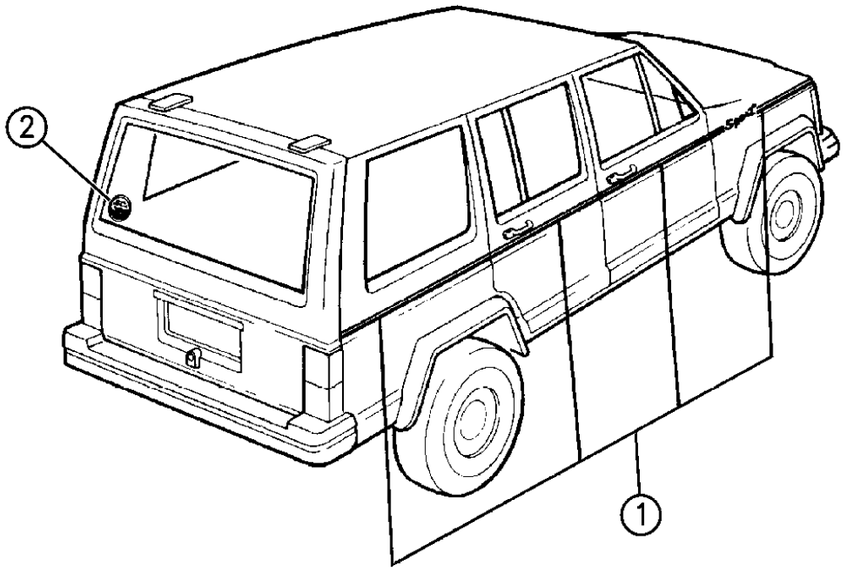

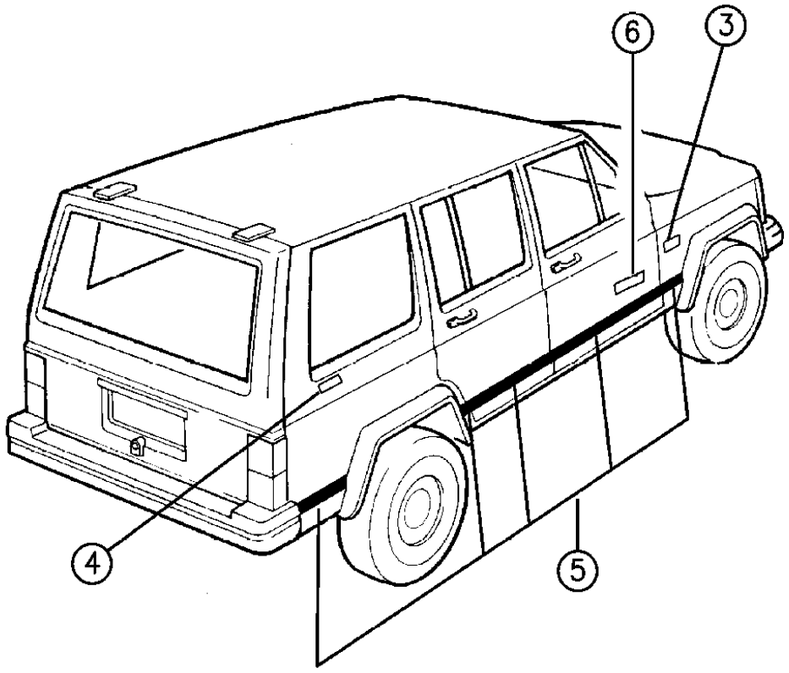

94J63 347

ITEM	PART NUMBER	QTY	BODY	MODEL	DESCRIPTION
1					TAPE PACKAGE, Bodyside
	4713 068-9	1			Light Silver/Medium Silver/Dark Silver, EUROPE, KDX
NOTE: For Base vehicle in Europe and KDX markets "SPORT" lettering is deleted from fender tape.					
2	5501 6564	1			DECAL, "Off Road Vehicle Package"
3					DECAL, Fender, "SPORT"
	5CW9 0MA1	2			Light Quartz
	5CW9 0MX9	2			Flat Black
4					DECAL, Quarter Panel, "4X4"
					1994-95
	5DD9 6MA1	2			Light Quartz
	5DD9 6MX9	2			Flat Black
					1996
	5FM6 2SA1	2			Silver
	5FM6 2SJ4	2			Gold
	5FM6 2SV1	2			Pearlstone
	5FM6 2SX9	2			Black
NOTE: Item 5 - "Blackout Tapes" are only used on vehicles with bodyside cladding.					
5					TAPE PACKAGE, Bodyside "Blackout Tape"
	4723 438-9	1			Light Champagne
	4723 440-1	1			Flat Black
	4741 442-3	1			Dark Silver
	4773 970-1	1			Pearlstone
					DECAL, "4.0 Litre High Output", KDX ***
	5CL0 6KA2	1			Light Silver
	5CL0 6MX9	1			Flat Black
6	QP59 SA1	2			DECAL "Classic" Front Door ***
					TAPE PACKAGE "Jamboree" EXPORT ***
	4741 554	1			Right
	4741 555	1			Left

MODEL CODES:

72=2 DR Wagon
74=4 DR Wagon
77=Open Body 93" Whlbase
78=Open Body 103" Whlbase - Export
T=2WD
J,N=4WD
U=4WD (RHD)

BODY STYLES:

YJ=Wrangler (4X4) "S"
Weangler (4X4) SE
Wrangler (4X4) Sahara
Wrangler (4X4) Renegade
XJ=Cherokee SE
Cherokee Sport
Cherokee Country
ZJ=Grand Cherokee SE
Grand Cherokee Laredo
Grand Cherolee Limited
ZG=Grand Cherokee European
Y1=Wrangler
X1=Cherokee
Z1=Grand Cherokee
KDX=Vehicles

AR = Use as Required - = Non Illustrated Part P.A.R. = Paint as Required

« RETURN TO GROUP INDEX

DECALS AND TAPE STRIPES COUNTRY XJ BODY FOUR DOOR
Figure EXJ-350

EXJ-350

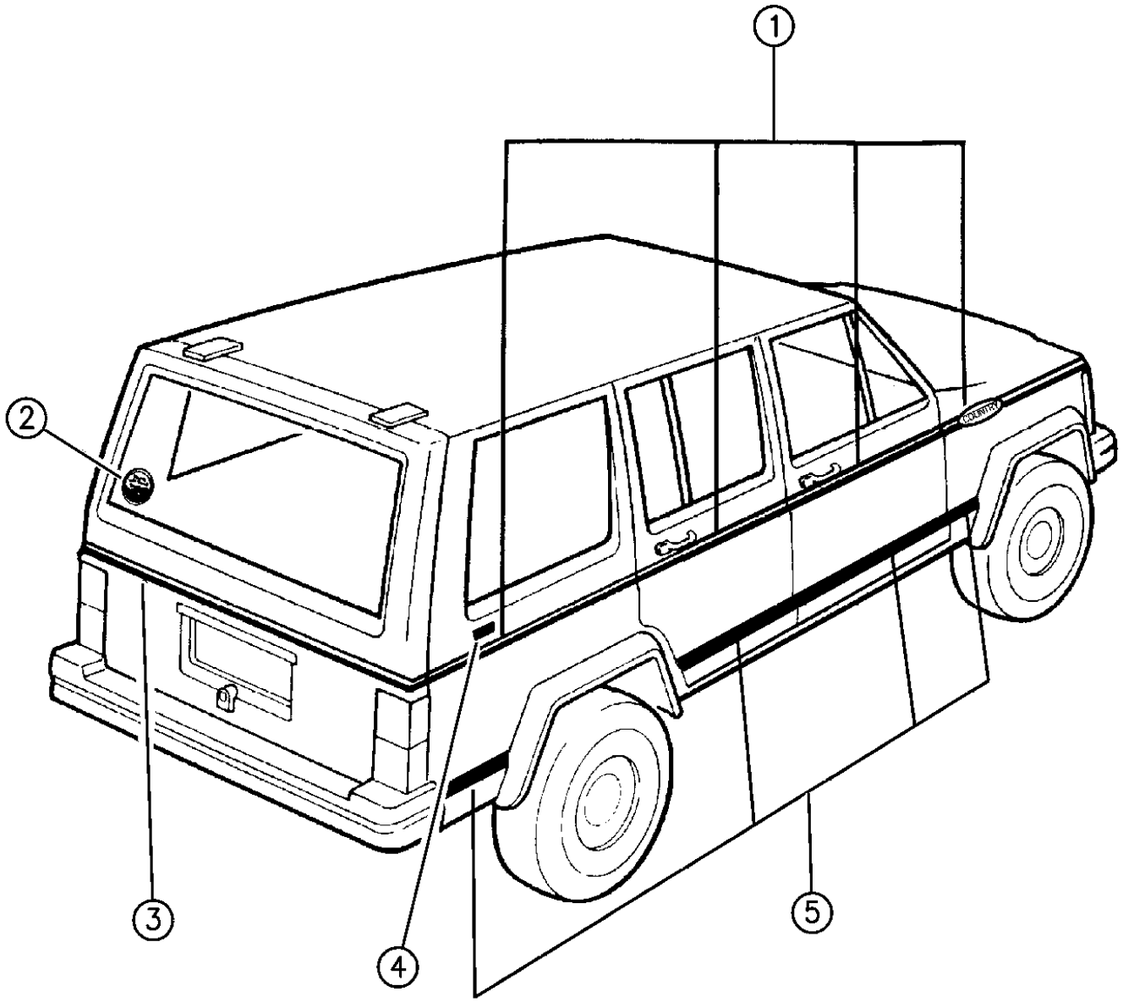

94J63 350

ITEM	PART NUMBER	QTY	BODY	MODEL	DESCRIPTION
1					PACKAGE, Tape Bodyside Upper (dual stripe w/COUNTRY graphics in fender tape)
					1994-95
	4723 412-3	1			Champagne
	4723 414-5	1			Black
	4741 464-5	1			Silver
	4773 926-7	1			Pearlstone
					1996
	4864 466-7	1			Silver
	4864 468-9	1			Pearlstone
	4864 470-1	1			Black
2	5501 6564	1			DECAL, "Off Road Vehicle Package"
3					DECAL, Liftgate, (dual stripe)
	5DE1 4MV3	1			Champagne
	5DE1 4MX9	1			Black
	5DE1 4MA1	1			Silver
	5DE1 4RV1	1			Pearlstone
4					DECAL, Quarter Panel, "4X4"
					1994-95
	5DD9 6MJ4	2			Gold Metallic
	5DD9 6MA1	2			Quartz
	5DD9 6MV3	2			Champagne
	5DD9 6MX9	2			Black
	5DD9 6RV1	2			Pearlstone
					1996
	5FM6 2SA1	2			Silver
	5FM6 2SJ4	2			Gold
	5FM6 2SV1	2			Pearlstone
	5FM6 2SX9	2			Black
NOTE: Item 5 - "Blackout Tapes" are only used on vehicles with bodyside cladding.					
5					PACKAGE, Bodyside "Blackout Tape"
	4723 438-9	1			Champagne
	4723 440-1	1			Black
	4741 442-3	1			Silver
	4773 970-1	1			Pearlstone

MODEL CODES:

72=2 DR Wagon
74=4 DR Wagon
77=Open Body 93" Whlbase
78=Open Body 103" Whlbase - Export
T=2WD
J,N=4WD
U=4WD (RHD)

BODY STYLES:

YJ=Wrangler (4X4) "S"
Weangler (4X4) SE
Wrangler (4X4) Sahara
Wrangler (4X4) Renegade
XJ=Cherokee SE
Cherokee Sport
Cherokee Country
ZJ=Grand Cherokee SE
Grand Cherokee Laredo
Grand Cherolee Limited
ZG=Grand Cherokee European
Y1=Wrangler
X1=Cherokee
Z1=Grand Cherokee
KDX=Vehicles

AR = Use as Required - = Non Illustrated Part P.A.R. = Paint as Required

« RETURN TO GROUP INDEX

SAGIPARTS

GROUP-EZJ
EXTERIOR MOULDINGS AND ORNAMENTATION

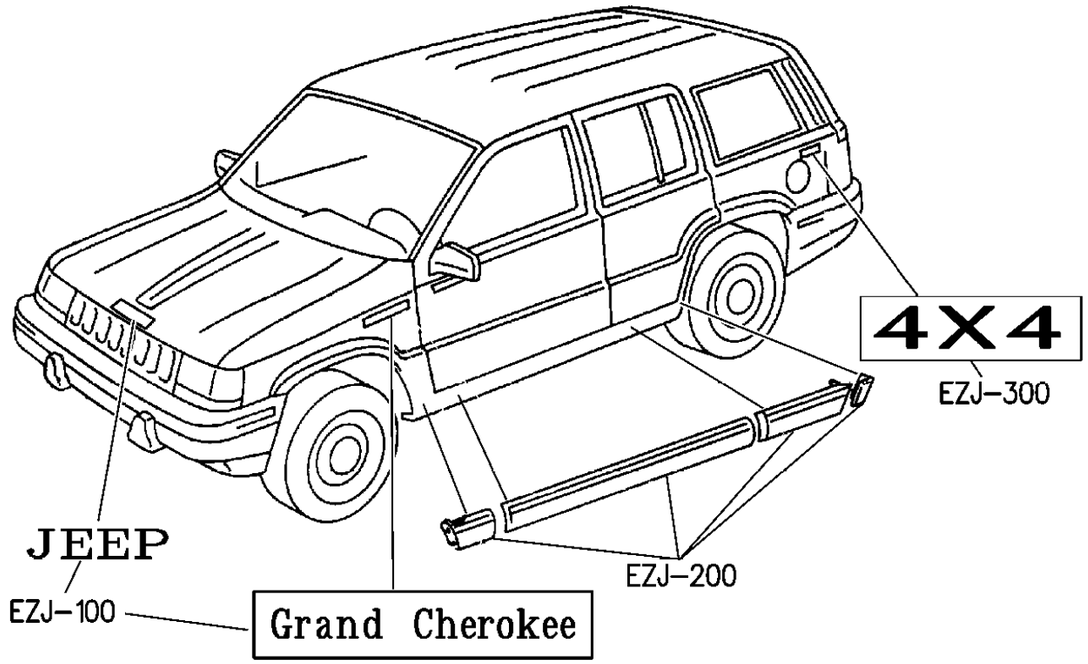

EZJ–100 NAMEPLATES	EZJ–200 MOULDINGS & ORNAMENTATION	EZJ–300 TAPE & DECALS	
Grand Cherokee JEEP	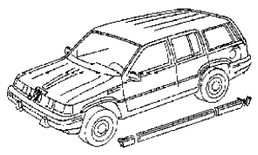	4X4 V6	

GROUP EZJ - EXTERIOR ORNAMENTATION GRAND CHEROKEE

ILLUSTRATION TITLE	GROUP-FIG. NO.
NAMEPLATES	
NAMEPLATES ZJ, ZG BODY	Fig. EZJ-120
MOULDINGS	
MOULDINGS, UPPER ZJ, ZG BODY	Fig. EZJ-250
MOULDINGS, BODYSIDE BASE AND SPORT ZJ, ZG BODY	Fig. EZJ-260
CLADDING AND SILL MOULDINGS LAREDO AND LIMITED ZJ, ZG BODY	Fig. EZJ-270
WOODGRAIN MOULDINGS AND WOODGRAIN OVERLAY ZJ, ZG BODY	Fig. EZJ-280
TAPES	
TAPES LAREDO AND LIMITED ZJ, ZG BODY	Fig. EZJ-360

NAMEPLATES ZJ, ZG BODY
Figure EZJ-120

EZJ-120A

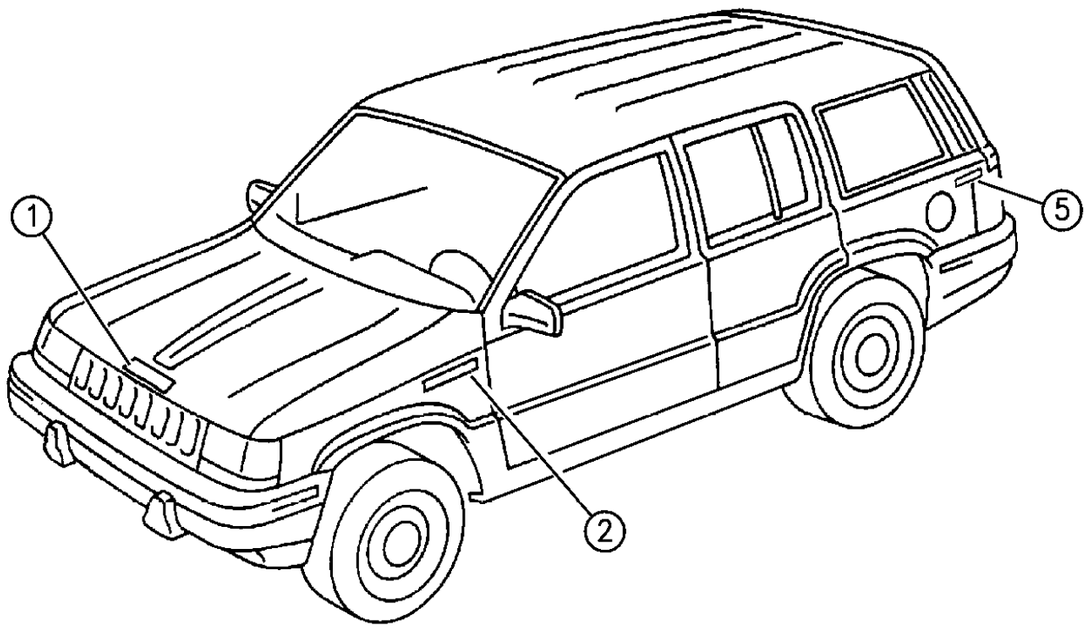

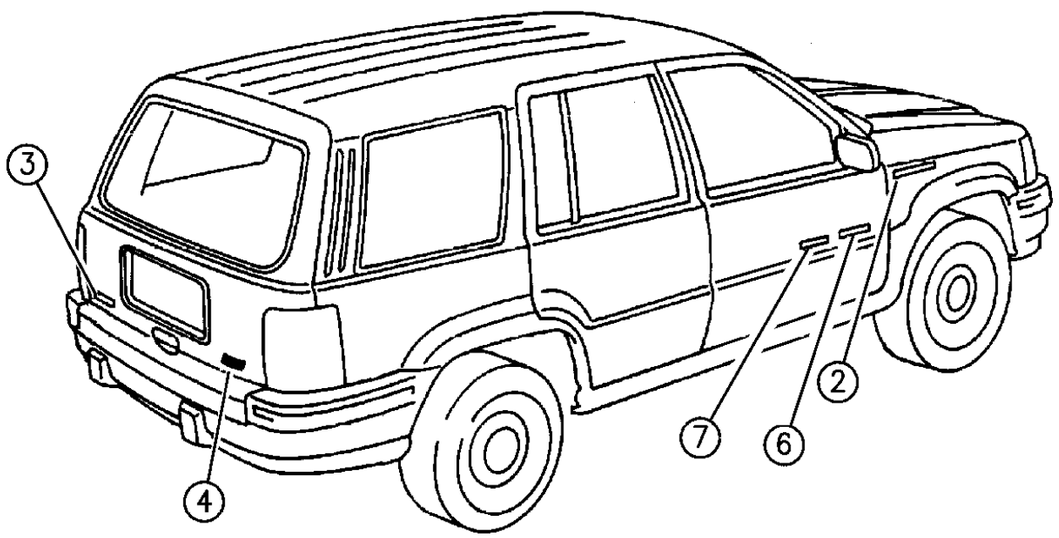

94J64 120

ITEM	PART NUMBER	QTY	BODY	MODEL	DESCRIPTION
1					LETTER SET, Hood ***
					"JEEP"
	5529 5446	1			Bright
	5DR9 1PY2	1			Gold
	5EM8 7SA1	2			Silver 1996
	5EM8 7SY1	2			Sand 1996
2					NAMEPLATE, Fender
					"GRAND CHEROKEE"
	5529 5445	2			Bright
	5DS0 5PY2	2			Gold
3					LETTER SET, Liftgate ***
					"JEEP"
	5529 5441	1			Bright
	5DS0 1PY2	1			Gold
	5EM8 7SA1	1			Silver, 1996
	5EM8 7SY1	1			Sand, 1996
4					NAMEPLATE, Liftgate
					"V-8 5.2 LITRE MPI"
	5529 5440	1			Bright
	5DS0 0PY2	1			Gold
					GRAPHIC "V8" ***
	5EN7 8SA1	1			Silver
	5EN7 8SY1	1			Sand
	5EN8 6SA1	1			"Turbo Diesel" Silver
	5EN8 6SY1	1			"Turbo Diesel" Sand
5					GRAPHIC "4x4" 1996 ***
	5EM8 9SA1	2			Silver
	5EM8 9SY1	2			Sand
6					GRAPHIC "Limited" 1996 ***
	5EM9 1SY1	2			Sand
	5EM9 1SA1	2			Silver
	5EM9 3SJY	2			Orvis Edition
7					GRAPHIC "Grand Cherokee" 1996 ***
	5EN8 0SA1	2			Silver
	5EN8 0SY1	2			Sand

MODEL CODES:

72=2 DR Wagon
74=4 DR Wagon
77=Open Body 93" Whlbase
78=Open Body 103" Whlbase - Export
T=2WD
J,N=4WD
U=4WD (RHD)

BODY STYLES:

YJ=Wrangler (4X4) "S"
Weangler (4X4) SE
Wrangler (4X4) Sahara
Wrangler (4X4) Renegade

XJ=Cherokee SE
Cherokee Sport
Cherokee Country

ZJ=Grand Cherokee SE
Grand Cherokee Laredo
Grand Cherolee Limited
ZG=Grand Cherokee European

Y1=Wrangler
X1=Cherokee
Z1=Grand Cherokee
KDX=Vehicles

AR = Use as Required - = Non Illustrated Part P.A.R. = Paint as Required

« RETURN TO GROUP INDEX

MOULDINGS, UPPER ZJ, ZG BODY
Figure EZJ-250

EZJ-250

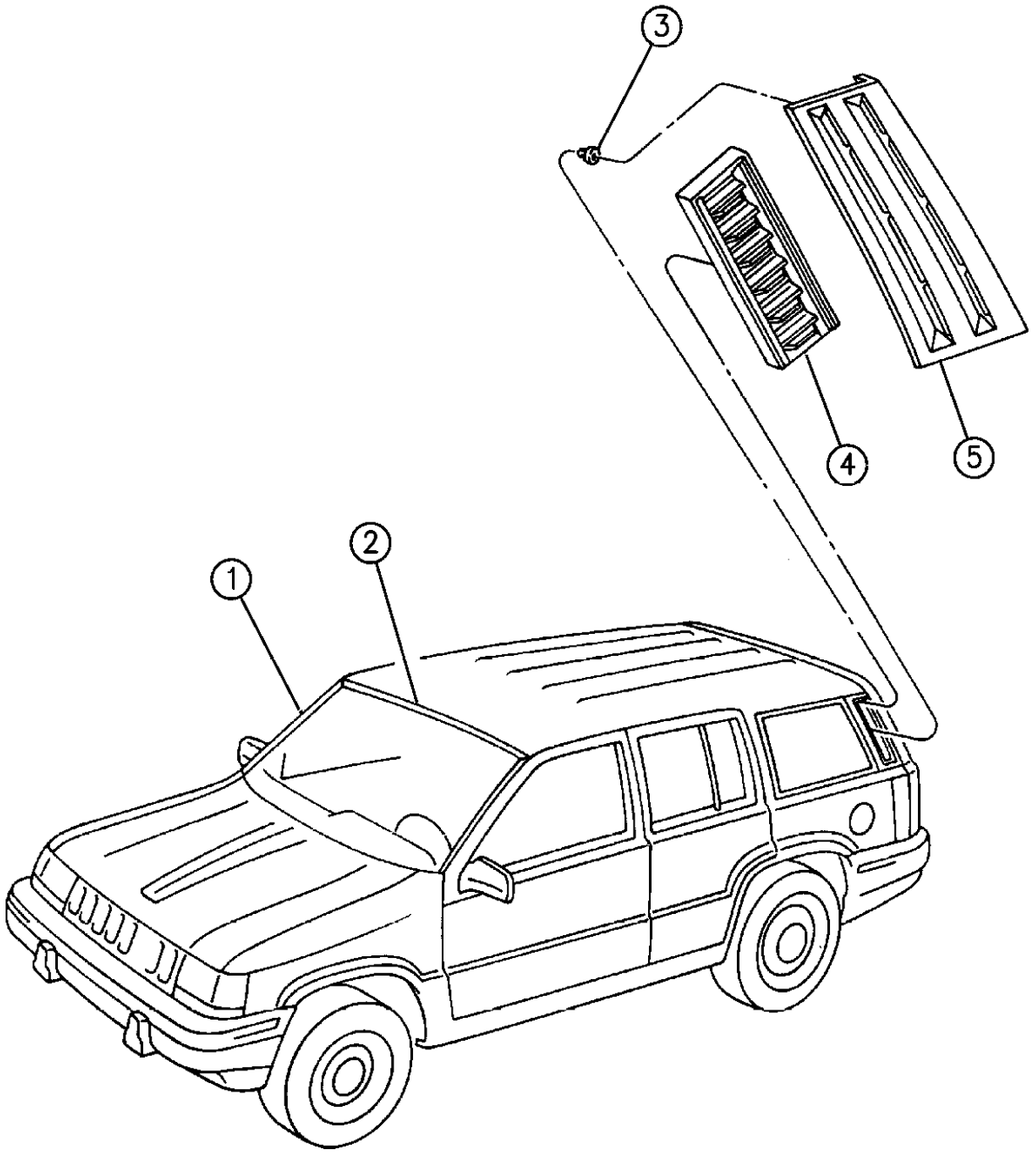

ITEM	PART NUMBER	QTY	BODY	MODEL	DESCRIPTION
1	5503 0364-5	1			MOULDING, Windshield Side
2	5513 4847	1			MOULDING, Windshield Upper
	6033 605	8			SCREW, Windshield Moulding
3	6004 512	6			CLIP, Exhauster Applique
4	5503 6049	2			EXHAUSTER, Quarter Panel ***
	4026 152	AR			HOSE, "D" Pillar Drain
5					APPLIQUE, Quarter Panel Exhauster
					1994
	5BJ16-7 PMB	1			Wildberry
	5BJ16-7 LBD	1			Light Blue
	5BJ16-7 LC9	1			Dark Blue
	5BJ16-7 LDA	1			Light Quartz
	5BJ16-7 LD8	1			Dark Quartz
	5BJ16-7 MR4	1			Red
	5BJ16-7 LG5	1			Green
	5BJ16-7 LM9	1			Black Cherry
	5BJ16-7 LX8	1			Black
	5BJ16-7 PP5	1			Teal
	5BJ16-7 LW7	1			White
	5BJ16-7 LFA	1			Driftwood
					1995
	5EB50-1 PFA	1			Driftwood
	5EB50-1 PMB	1			Wildberry
	5EM50-1 PP5	1			Teal
	5EB50-1 PR4	1			Red
	5EB50-1 PW7	1			White
	5EB50-1 PX8	1			Black
	5EB50-1 RB3	1			Blue
	5EB50-1 RJN	1			Moss Green
	5EB50-1 RJ7	1			Chargold
					LEFT, 1996
	5FK7 1SB3	1			Medium Blue
	5FK7 1SCW	1			Iris
	5FK7 1SC5	1			Light Blue
	5FK7 1SC9	1			Jewel Blue
	5FK7 1SEG	1			Rosewood
	5FK7 1SFA	1			Driftwood
	5FK7 1SG8	1			Forest Green
	5FK7 1SJN	1			Moss Green
	5FK7 1SJ7	1			Khaki
	5FK7 1SR4	1			Red
	5FK7 1SW1	1			White

MODEL CODES:

72=2 DR Wagon
74=4 DR Wagon
77=Open Body 93" Whlbase
78=Open Body 103" Whlbase - Export
T=2WD
J,N=4WD
U=4WD (RHD)

BODY STYLES:

YJ=Wrangler (4X4) "S"
Weangler (4X4) SE
Wrangler (4X4) Sahara
Wrangler (4X4) Renegade
XJ=Cherokee SE
Cherokee Sport
Cherokee Country
ZJ=Grand Cherokee SE
Grand Cherokee Laredo
Grand Cherolee Limited
ZG=Grand Cherokee European
Y1=Wrangler
X1=Cherokee
Z1=Grand Cherokee
KDX=Vehicles

AR = Use as Required - = Non Illustrated Part P.A.R. = Paint as Required

MOULDINGS, UPPER ZJ, ZG BODY
Figure EZJ-250

EZJ-250

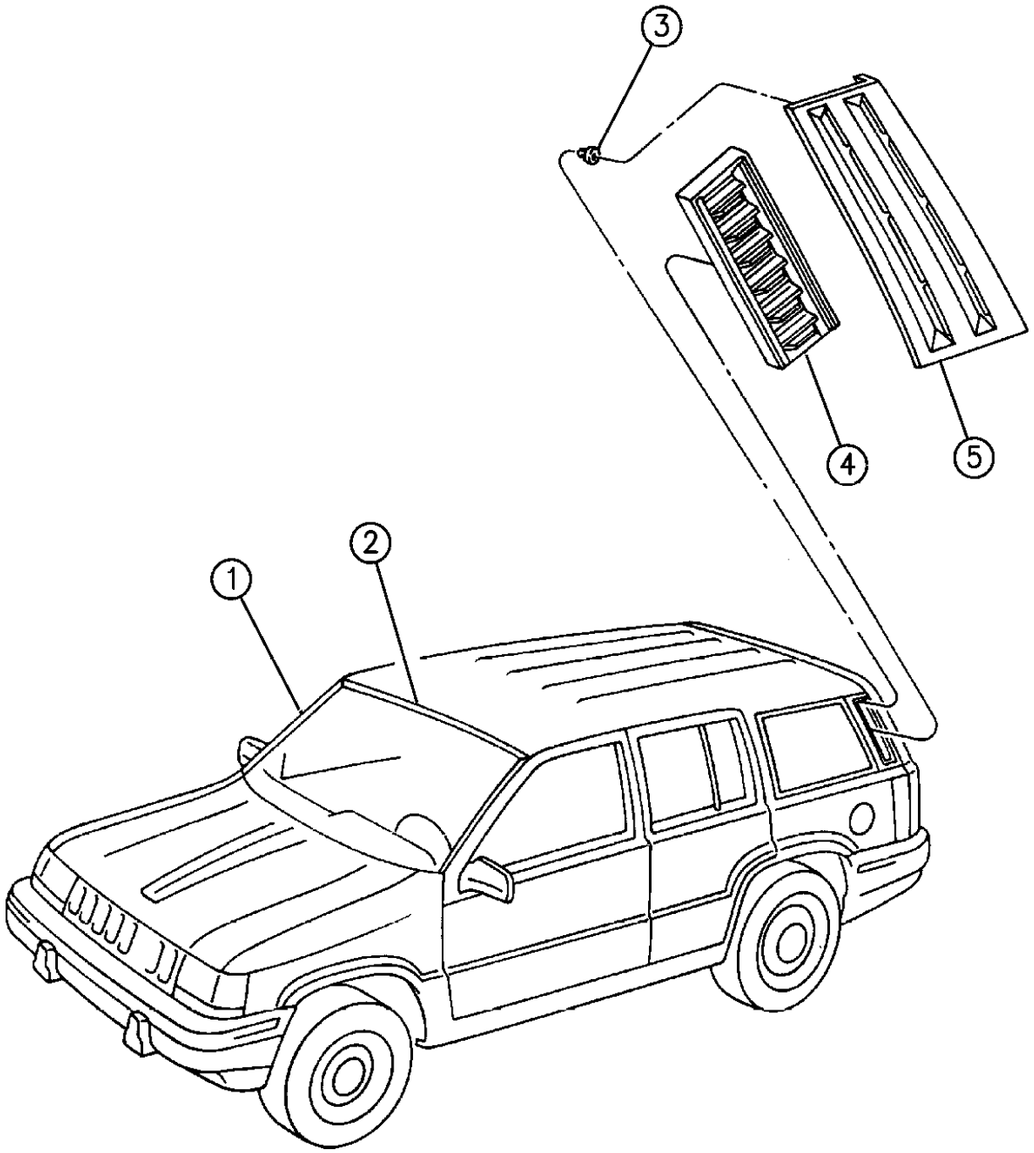

94J64 250

ITEM	PART NUMBER	QTY	BODY	MODEL	DESCRIPTION
	5FK7 1SW4	1			Pearl White
	5FK7 1SW7	1			Bright White
	5FK7 1SX8	1			Black
					RIGHT, 1996
	5FK7 2SB3	1			Medium Blue
	5FK7 2SCW	1			Iris
	5FK7 2SC5	1			Light Blue
	5FK7 2SC9	1			Jewel Blue
	5FK7 2SEG	1			Rosewood
	5FK7 2SFA	1			Driftwood
	5FK7 2SG8	1			Forest Green
	5FK7 2SJN	1			Moss Green
	5FK7 2SJ7	1			Khaki
	5FK7 2SR4	1			Red
	5FK7 2SW1	1			White
	5FK7 2SW4	1			Pearl White
	5FK7 2SW7	1			Bright White
	5FK7 2SX8	1			Black
	4773 279	1			STRIP, Exhauster Foam ***
	6034 542	6			STUD, Applique

MODEL CODES:

72=2 DR Wagon
74=4 DR Wagon
77=Open Body 93" Whlbase
78=Open Body 103" Whlbase - Export
T=2WD
J,N=4WD
U=4WD (RHD)

BODY STYLES:

YJ=Wrangler (4X4) "S"
Weangler (4X4) SE
Wrangler (4X4) Sahara
Wrangler (4X4) Renegade

XJ=Cherokee SE
Cherokee Sport
Cherokee Country

ZJ=Grand Cherokee SE
Grand Cherokee Laredo
Grand Cherolee Limited
ZG=Grand Cherokee European

Y1=Wrangler
X1=Cherokee
Z1=Grand Cherokee
KDX=Vehicles

AR = Use as Required - = Non Illustrated Part P.A.R. = Paint as Required

MOULDINGS, BODYSIDE BASE AND SPORT ZJ, ZG BODY
Figure EZJ-260

EZJ-260

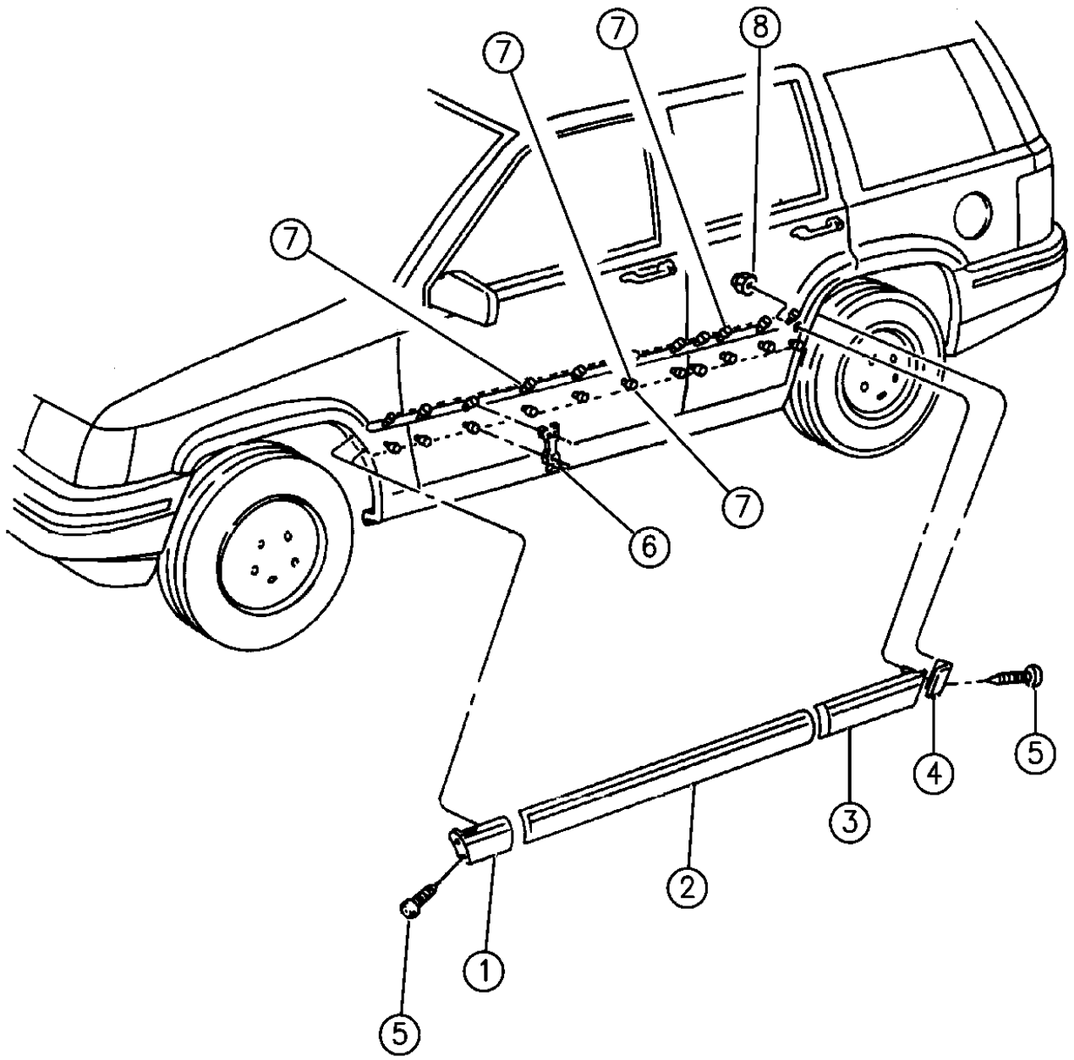

94J64 260

ITEM	PART NUMBER	QTY	BODY	MODEL	DESCRIPTION
1	5529 4934-5	1			MOULDING ASSEMBLY, Fender, Black w/Bright Insert
-	5529 5170-1	1			INSERT, Fender Moulding, Bright
2	5529 4938-9	1			MOULDING ASSEMBLY, Front Door, Black w/Bright Insert
-	5529 5172-3	1			INSERT, Front Door Moulding, Bright
3	5529 4942-3	1			MOULDING ASSEMBLY, Rear Door, Black w/Bright Insert
-	5529 5174-5	1			INSERT, Rear Door Moulding, Bright
-	6502 872	2			NUT, Rear Door Moulding
4	5529 4944-5	1			MOULDING, Quarter Panel, Black
5		8			SCREW, Wheel Opening (not serviced .164-18X.875)
6	5529 4948	22			CLIP, Bull Horn
7		44			WELD STUD, (not serviced, use repair screw package)
-	4293 616	AR			SCREW, Repair Package
8	6502 872	2			NUT, Rear Door Moulding Attaching

MODEL CODES:

72=2 DR Wagon
74=4 DR Wagon
77=Open Body 93" Whlbase
78=Open Body 103" Whlbase - Export
T=2WD
J,N=4WD
U=4WD (RHD)

BODY STYLES:

YJ=Wrangler (4X4) "S"
Weangler (4X4) SE
Wrangler (4X4) Sahara
Wrangler (4X4) Renegade

XJ=Cherokee SE
Cherokee Sport
Cherokee Country

ZJ=Grand Cherokee SE
Grand Cherokee Laredo
Grand Cherolee Limited
ZG=Grand Cherokee European

Y1=Wrangler
X1=Cherokee
Z1=Grand Cherokee
KDX=Vehicles

AR = Use as Required - = Non Illustrated Part P.A.R. = Paint as Required

CLADDING AND SILL MOULDINGS LAREDO AND LIMITED ZJ, ZG BODY
Figure EZJ-270

EZJ-270

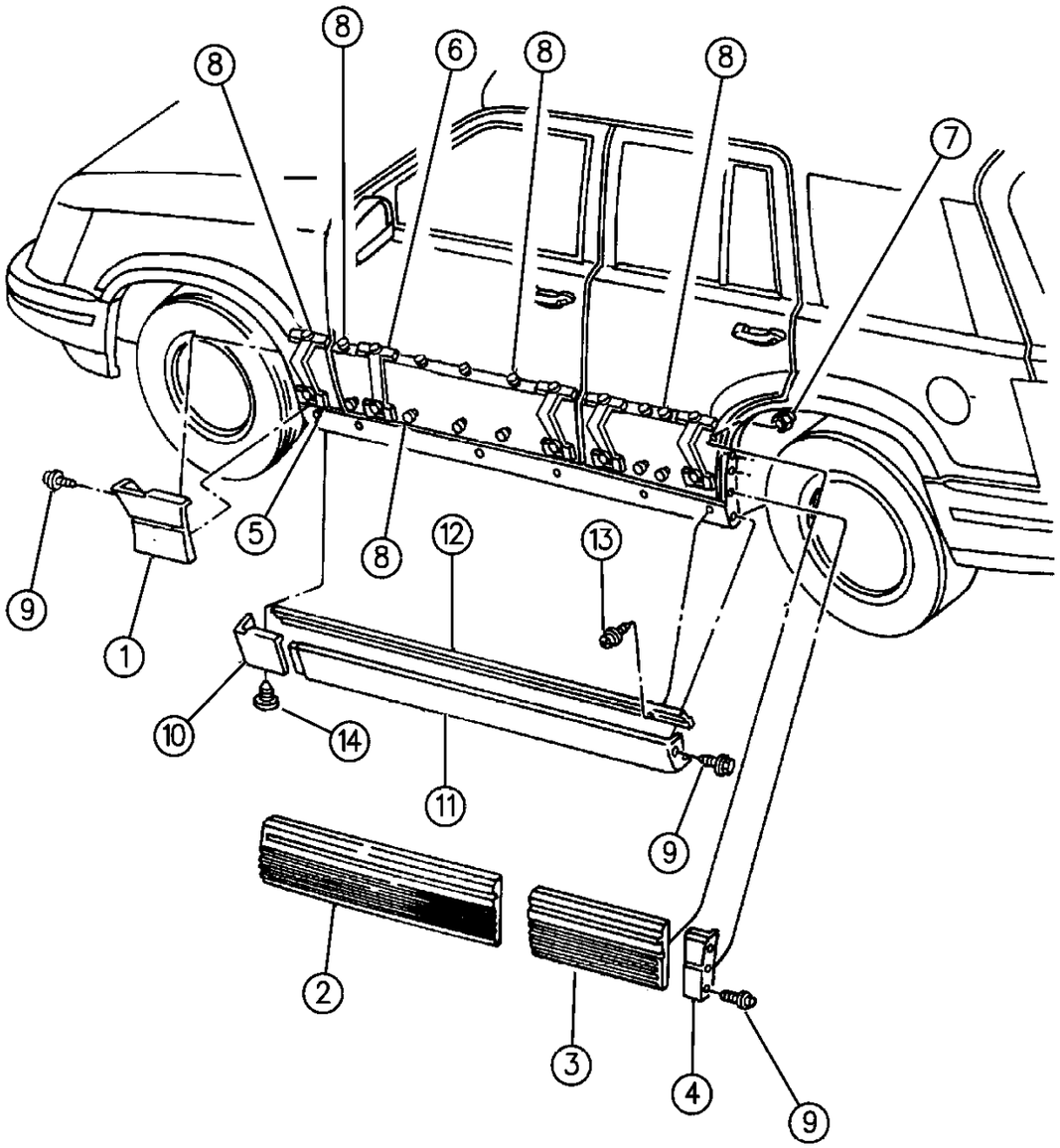

94J64 270

ITEM	PART NUMBER	QTY	BODY	MODEL	DESCRIPTION
1					CLADDING, Fender ***
	5DG36-7 MWY	1			Limited
	5DP74-5 SW1	1			Limited, 1996
	5CF40-1 LS5	1			Laredo
	5DP62-3 SS5	1			Laredo, 1996
					"Orvis" Package 1995
	5EB4 2RJZ	1			Right
	5EB4 3RJZ	1			Left
					INSERT, Fender Cladding
	5CZ44-5 LJ4	1			Gold Met.
	5CZ44-5 MY2	1			Gold
	5CZ44-5 LX9	1			Black
	5CZ44-5 RE5	1			Red
2					CLADDING, Front Door ***
	5DG44-5 MWY	1			Limited
	5DP84-5 SW1	1			Limited, 1996
	5CF44-5 LS5	1			Laredo
	5DP76-7 SS5	1			Laredo, 1996
					"Orvis" Package 1995
	5EB4 6RJZ	1			Right
	5EB4 7RJZ	1			Left
					INSERT, Front Door Cladding
	5CZ46-7 LJ4	1			Gold Met.
	5CZ46-7 MY2	1			Gold
	5CZ46-7 LX9	1			Black
	5CZ46-7 RE5	1			Red
3					CLADDING, Rear Door ***
	5DG50-1 MWY	1			Limited
	5DP96-7 SW1	1			Limited, 1996
	5CF48-9 LS5	1			Laredo
	5DP86-7 SS5	1			Laredo, 1996
					"Orvis" Package
	5EB4 8RJZ	1			Right
	5EB4 9RJZ	1			Left
					INSERT, Rear Door Cladding
	5CZ48-9 LJ4	1			Gold Met.
	5CZ48-9 MY2	1			Gold
	5CZ48-9 LX9	1			Black
	5CZ48-9 RE5	1			Red
4					CLADDING, Quarter Panel ***
	5DG54-5 MW7				Limited and Orvis
	5DR22-3 SW1	1			Limited and Orvis, 1996

MODEL CODES:

72=2 DR Wagon
74=4 DR Wagon
77=Open Body 93" Whlbase
78=Open Body 103" Whlbase - Export
T=2WD
J,N=4WD
U=4WD (RHD)

BODY STYLES:

YJ=Wrangler (4X4) "S"
Weangler (4X4) SE
Wrangler (4X4) Sahara
Wrangler (4X4) Renegade
XJ=Cherokee SE
Cherokee Sport
Cherokee Country
ZJ=Grand Cherokee SE
Grand Cherokee Laredo
Grand Cherolee Limited
ZG=Grand Cherokee European
Y1=Wrangler
X1=Cherokee
Z1=Grand Cherokee
KDX=Vehicles

AR = Use as Required - = Non Illustrated Part P.A.R. = Paint as Required

CLADDING AND SILL MOULDINGS LAREDO AND LIMITED ZJ, ZG BODY
Figure EZJ-270

EZJ-270

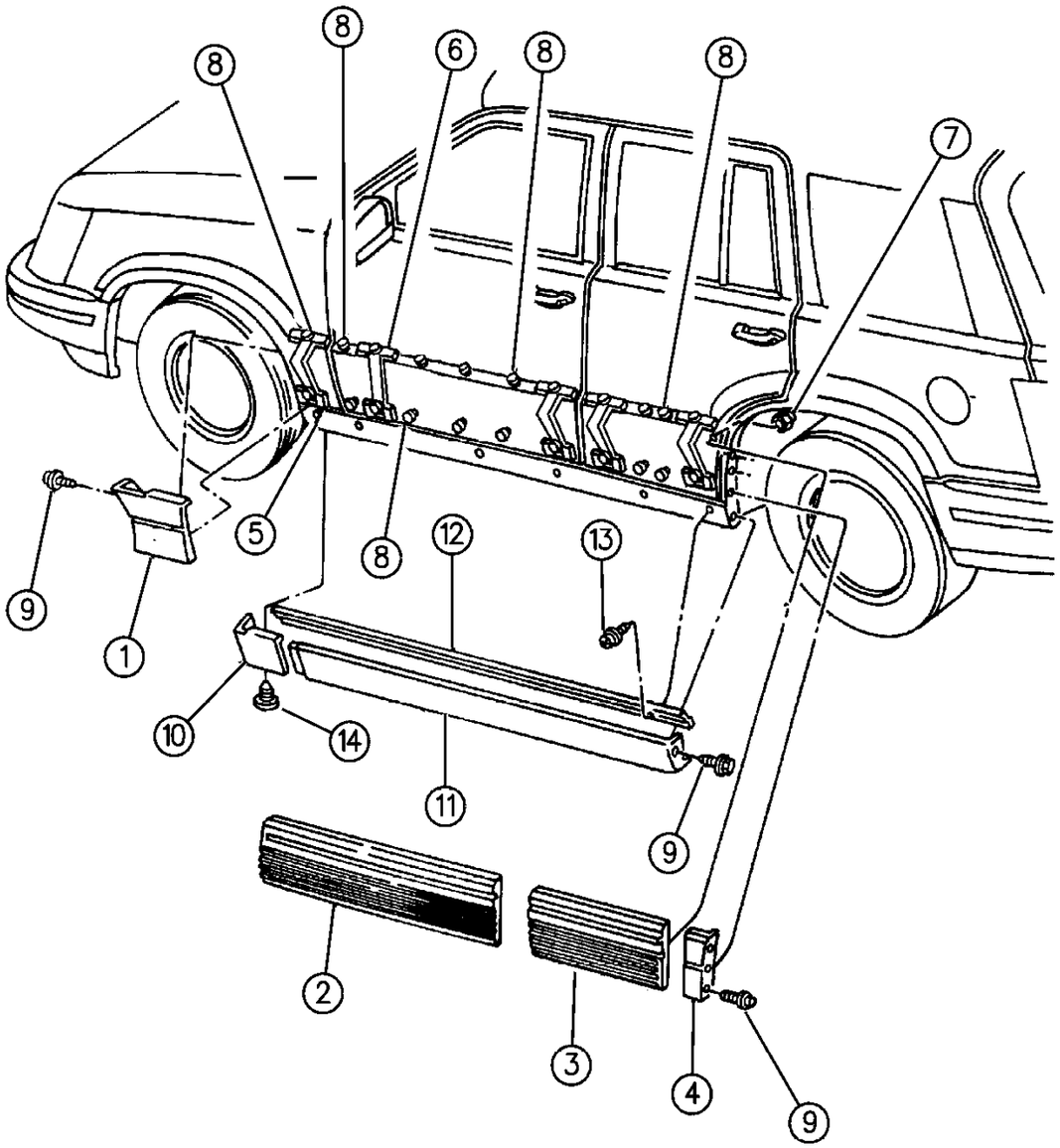

94J64 270

ITEM	PART NUMBER	QTY	BODY	MODEL	DESCRIPTION
	5CF50-1 LS5	1			Laredo
	5DP98-9 SS5	1			Laredo, 1996
5	5529 4782-3	4			RETAINER, Cladding to Door Opening
6	5529 4777	14			RETAINER, Cladding to Door
7	6502 872	2			NUT, Rear Door Moulding
8		AR			STUD, Weld (Order screw repair package 4293616)
	4293 616	AR			SCREW, Repair Package, Moulding Retainer Attaching
9		AR			SCREW (DNS)
10	5CJ46-7 LS5	1			MOULDING, Sill, Front, Dark Gray, Laredo
11	5CJ50-1 LS5	1			MOULDING, Sill, Rear, Dark Gray, Laredo
12	5529 4836-7	1			RAIL, Sill Moulding Upper Hanger, Laredo
13		16			SCREW (DNS)
14	5BB1 4LS5	10			RETAINER, Sill Moulding Att.

NOTE: Laredo claddings are slightly textured
NOTE: Limited claddings have a smooth finish
NOTE: Sill mouldings are not used on the Limited model, Cladding only.

MODEL CODES:

72=2 DR Wagon
74=4 DR Wagon
77=Open Body 93" Whlbase
78=Open Body 103" Whlbase - Export
T=2WD
J,N=4WD
U=4WD (RHD)

BODY STYLES:

YJ=Wrangler (4X4) "S"
Weangler (4X4) SE
Wrangler (4X4) Sahara
Wrangler (4X4) Renegade
XJ=Cherokee SE
Cherokee Sport
Cherokee Country
ZJ=Grand Cherokee SE
Grand Cherokee Laredo
Grand Cherolee Limited
ZG=Grand Cherokee European
Y1=Wrangler
X1=Cherokee
Z1=Grand Cherokee
KDX=Vehicles

AR = Use as Required - = Non Illustrated Part P.A.R. = Paint as Required

WOODGRAIN MOULDINGS AND WOODGRAIN OVERLAY ZJ, ZG BODY
Figure EZJ-280

EZJ-280

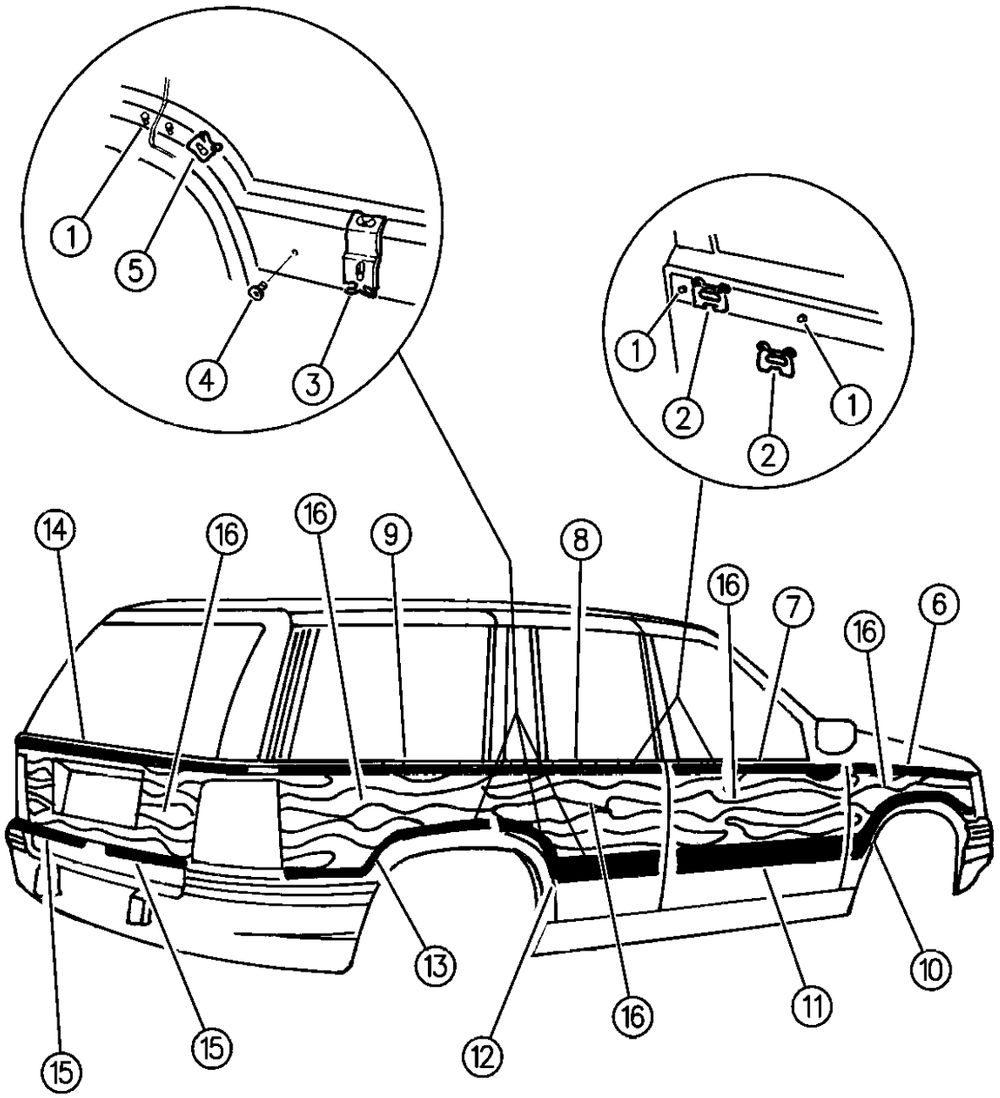

94J64 280

ITEM	PART NUMBER	QTY	BODY	MODEL	DESCRIPTION
1	4293 616	AR			REPAIR SCREW PACKAGE, use to service production weld studs (1 package contains 6 screws) ***
2	5503 2546	69			CLIP, Woodgrain Moulding Retaining (use on all upper mouldings and the narrow portion of the lower mouldings)
3	5503 2554	18			CLIP, Lower Woodgrain Moulding Retaining (use on the wide portion)
4	4057 555	AR			BARREL NUT PACKAGE, Lower Woodgrain Moulding Stud Attaching (1 package contains 6 pieces)
5	5503 3622	20			CLIP, Woodgrain Moulding (use on curved areas around wheel opening)
6	5503 2538-9	1			MOULDING ASSEMBLY, Fender Upper Woodgrain
7	5503 2556-7	1			MOULDING ASSEMBLY, Front Door Upper Woodgrain
8	5503 2570-1	1			MOULDING ASSEMBLY, Rear Door Upper Woodgrain
9	5503 2586-7	1			MOULDING ASSEMBLY, Quarter Upper Woodgrain
10	5503 2548-9	1			MOULDING ASSEMBLY, Fender Lower Woodgrain (only the right moulding includes the makers mark pentastar)
-	4630 238	1			MAKER'S MARK, Pentastar (right fender moulding) ***
11	5503 2564-5	1			MOULDING ASSEMBLY, Front Door Lower Woodgrain
12	5503 2576-7	1			MOULDING ASSEMBLY, Rear Door Lower Woodgrain
NOTE: The inserts in items 10, 11 and 12 are only serviced in the moulding assembly.					
13	5503 2592-3	1			MOULDING ASSEMBLY, Rear Quarter Lower Woodgrain
14	5503 2602	1			MOULDING ASSEMBLY, Liftgate Upper Woodgrain
15	5503 2608-9	1			MOULDING ASSEMBLY, Liftgate Lower Woodgrain
16	4713 889	AR			DECAL, Overlay, Accent Estate Woodgrain (this service overlay is 15" tall x 70" long, cut to fit)

MODEL CODES:

72=2 DR Wagon
74=4 DR Wagon
77=Open Body 93" Whlbase
78=Open Body 103" Whlbase - Export
T=2WD
J,N=4WD
U=4WD (RHD)

BODY STYLES:

YJ=Wrangler (4X4) "S"
Weangler (4X4) SE
Wrangler (4X4) Sahara
Wrangler (4X4) Renegade
XJ=Cherokee SE
Cherokee Sport
Cherokee Country
ZJ=Grand Cherokee SE
Grand Cherokee Laredo
Grand Cherolee Limited
ZG=Grand Cherokee European
Y1=Wrangler
X1=Cherokee
Z1=Grand Cherokee
KDX=Vehicles

AR = Use as Required - = Non Illustrated Part P.A.R. = Paint as Required

« RETURN TO GROUP INDEX

TAPES LAREDO AND LIMITED ZJ, ZG BODY
Figure EZJ-360

EZJ-360

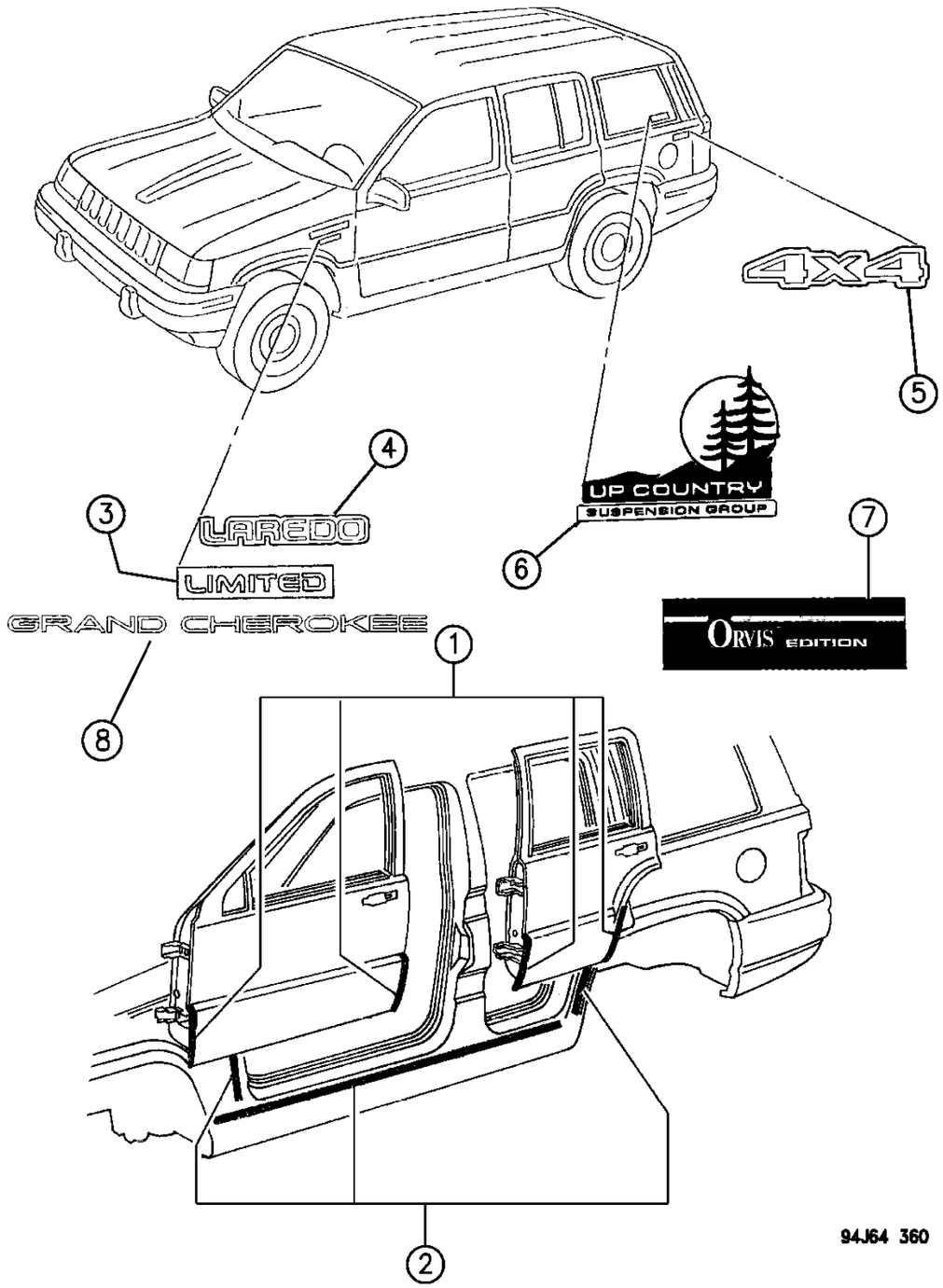

ITEM	PART NUMBER	QTY	BODY	MODEL	DESCRIPTION
1	4728 019	2			PACKAGE, Bodyside Tape, Dark Gray (Blackout) Use d to cover gaps around door edge cladding, Laredo
2	4728 022-3	1			PACKAGE, Tape Sill, Dark Gray ("BLACKOUT") Used on top of the sill moulding (Laredo)
3	5DL2 1PY2	1			DECAL, Fender"Limited" This decal is used in conjunction w/ painted Stripe.1994-95 ***
4					DECAL, Fender "Laredo" ***
	5CW8 8LA1	2			Light Quartz, 1994
	5CW8 8LA7	2			Dark Quartz, 1994
	5EK5 0RA1	1			Light Quartz, 1995
	5EK5 0RA7	1			Dark Quartz, 1995
5					DECAL, Quarter Panel "4X4" ***
	5EH1 1PYJ	2			Gold w/Outline
	5EH1 1PA1	2			Light Quartz w/Outline
	5EH1 1PA7	2			Dark Quartz w/Outline
6	5DL3 2MXW	1			DECAL, "Up Country Suspension" ***
7	5525 5210-1	1			PACKAGE, Front Door Cladding "Orvis" Tape
	5525 5212	2			PACKAGE, Rear Door and Front Fender Cladding "Orvis"
					PACKAGE, "Orvis" Fascia Tape
	4797 182	1			Front
	4797 183	1			Rear
8	5EB2 5RYJ	2			DECAL, Door "ORVIS" 1994-95 ***
	5EN8 0SA1	2	ZG		Silver 1996
	5EN8 0SY1	2	ZG		Sand 1996

NOTE: All other stripes on ZJ;s are Paint.

MODEL CODES:

72=2 DR Wagon
74=4 DR Wagon
77=Open Body 93" Whlbase
78=Open Body 103" Whlbase - Export
T=2WD
J,N=4WD
U=4WD (RHD)

BODY STYLES:

YJ=Wrangler (4X4) "S"
Weangler (4X4) SE
Wrangler (4X4) Sahara
Wrangler (4X4) Renegade
XJ=Cherokee SE
Cherokee Sport
Cherokee Country
ZJ=Grand Cherokee SE
Grand Cherokee Laredo
Grand Cherolee Limited
ZG=Grand Cherokee European
Y1=Wrangler
X1=Cherokee
Z1=Grand Cherokee
KDX=Vehicles

AR = Use as Required - = Non Illustrated Part P.A.R. = Paint as Required

« RETURN TO GROUP INDEX

GROUP-SYJ

BODY SHEET METAL, GLASS EXCEPT DOORS

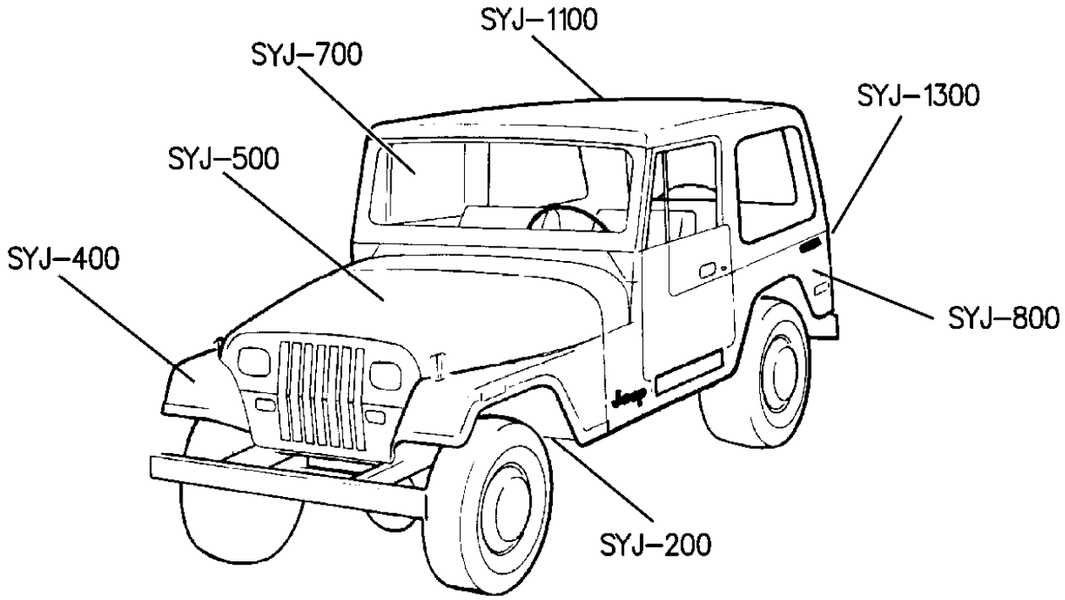

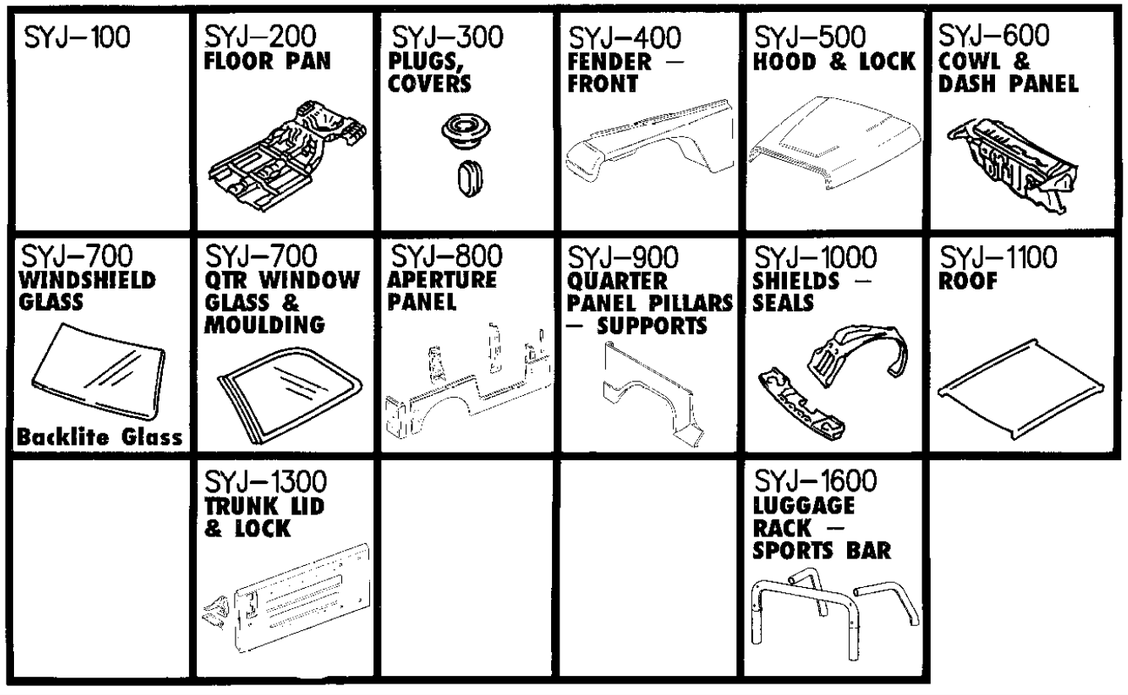

GROUP SYJ - SHEET METAL - BODY WRANGLER

ILLUSTRATION TITLE	GROUP-FIG. NO.
FLOOR PAN	
PAN, FLOOR FRONT AND REAR WRANGLER, YJ	Fig. SYJ-210
PLUGS	
PLUGS WRANGLER, YJ	Fig. SYJ-305
FENDERS, FRONT WRANGLER, YJ	Fig. SYJ-410
FRONT FENDER & ROCKER PANEL RENEGADE YJ - 1994	Fig. SYJ-420
HOOD & HOOD RELEASE	
HOOD, LOCK AND CATCHES WRANGLER, YJ	Fig. SYJ-510
COWL AND DASH PANEL	
PANELS, COWL AND DASH WRANGLER, YJ	Fig. SYJ-610
GLASS AND MIRRORS	
WINDSHIELD FRAME, HINGES, AND SEALS WRANGLER, YJ	Fig. SYJ-710
GLASS, MIRROR, INSIDE REAR VIEW LESS WORLD CAB WRANGLER, YJ	Fig. SYJ-720
GLASS EUROPE, MIDEAST, KDX WRANGLER, Y1	Fig. SYJ-730
LIFT DOOR GLASS AND RELATED PARTS WITH HARD TOP ENCLOSURE WRANGLER, YJ	Fig. SYJ-740
APPERTURE PANELS	
PANELS, BODY SIDE WRANGLER, YJ	Fig. SYJ-810
QUARTER PANELS, PILLAR AND SUPPORTS	
QUARTER PANEL RENEGADE YJ 1994	Fig. SYJ-910
ROOF PANELS AND TOPS	
TOP ENCLOSURE, HARD WRANGLER, YJ	Fig. SYJ-1110
SOFT TOP HARDWARE WITH HALF DOORS WRANGLER, YJ	Fig. SYJ-1120
SOFT TOP AND WINDOWS WITH HALF DOORS WRANGLER, YJ	Fig. SYJ-1130
SOFT TOP HARDWARE WITH FULL HARD DOORS WRANGLER, YJ	Fig. SYJ-1140
SOFT TOP AND WINDOWS WITH FULL HARD DOORS WRANGLER, YJ	Fig. SYJ-1150
SOFT TOP, AND WINDOWS EUROPE, KDX, Y1	Fig. SYJ-1160
TAILGATE AND LIFT DOOR	
TAILGATE WRANGLER, YJ	Fig. SYJ-1310
HINGES, TAILGATE WRANGLER, YJ	Fig. SYJ-1320
ADD-A-TRUNK WRANGLER YJ	Fig. SYJ-1330
SPORT BAR AND LUGGAGE RACK	
SPORT BAR WRANGLER, YJ	Fig. SYJ-1610

PAN, FLOOR FRONT AND REAR WRANGLER, YJ
Figure SYJ-210

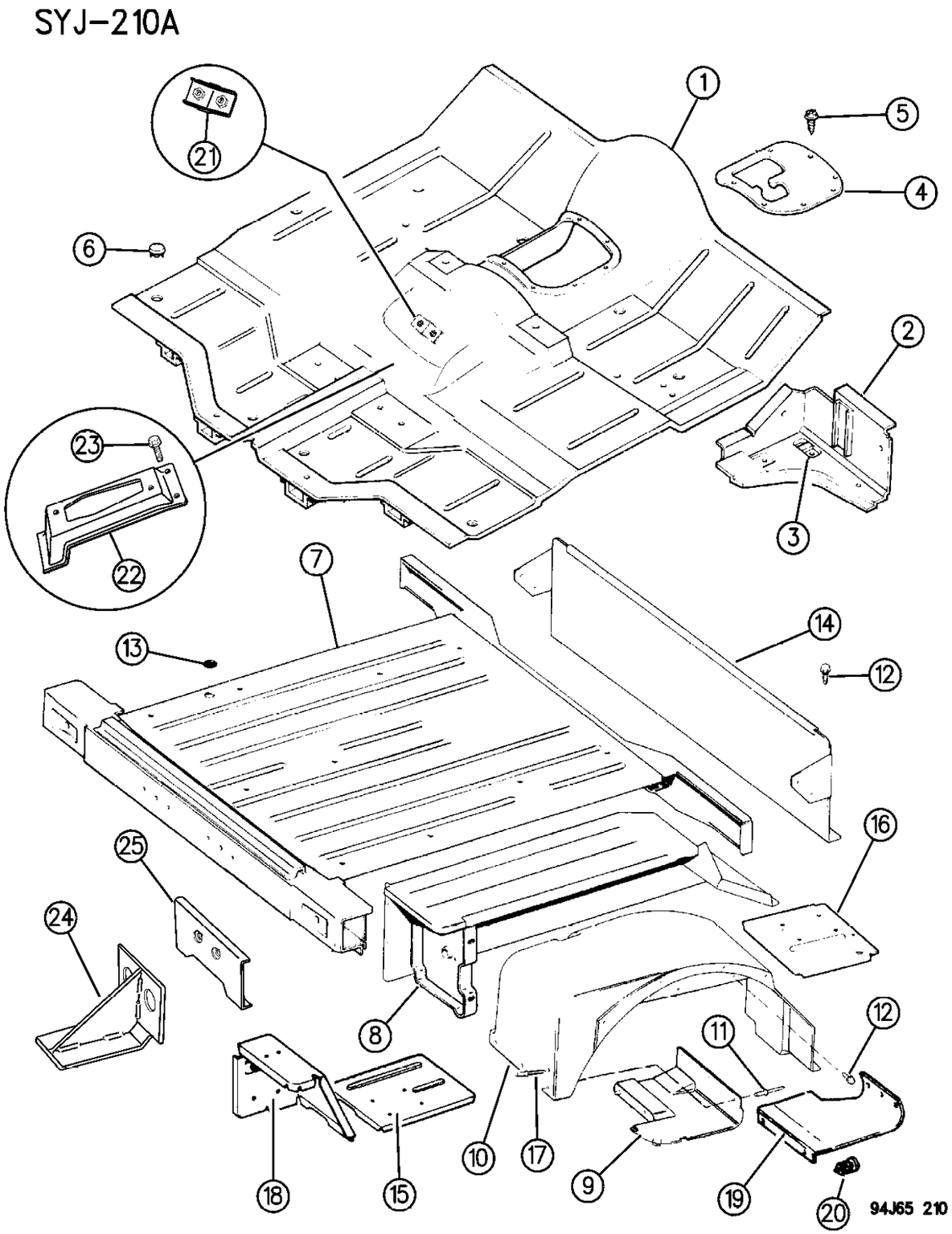

ITEM	PART NUMBER	QTY	BODY	MODEL	DESCRIPTION
1	5534 5936	1			PAN, Front Floor
	4490 111	2			TAPPING PLATE ***
	5501 3668	4			FOOTMAN LOOP, Storage of Side Bars ***
	0154 605	8			SCREW, To Footman Loop
2					BRACKET, (Serviced in Item 1)
3	J545 2448	1			RETAINER, Tapping Plate, (Also serviced in item 1)
4					COVER, Floor Pan
	5505 0141	1			w/Auto. Trans.
	5505 0142	1			w/Manual Trans.
5	J400 6444	9			SCREW, .190-16x.625
6	5500 6578	11			PLUG
7	5517 5781	1			PAN, Rear Floor ***
-	4490 835	2			REINFORCEMENT, Shoulder Belt
8					WHEELHOUSE ASSEMBLY ***
	5534 5794-5	1			
	J575 8288	2	78		KDX - Egypt, Venezuela
9	5500 9592-3	1			SHIELD, Splash
10	5517 4508-9	1			PANEL, Inner Protection
11		AR			RIVET, Drive Pointed, (M6.2x22.80), (Not Serviced)
12	J943 1948	AR			SCREW, Attach Back to Side Panel
13					PLUG
	5500 6578	AR			For Drain Holes
	J400 7053	AR			For Rear Seat Mounting Holes, KDX
	J400 7076	8			For Sport Bar Hole, KDX - EGYPT
14	5502 5238	1			PANEL, Load Barrier, EUROPE
15	J575 6744-5	1	78		FILLER, Cargo Floor Rear, KDX - Egypt, Venezuela
16	5501 7632-3	1	78		FILLER, Cargo Floor Front, KDX - Egypt, Venezuela
17	J400 6012	4			RIVET
18	J575 8722-3	1	78		PANEL, Rear Corner Inner, KDX - Egypt, Venezuela
19	J575 8744-5	1	78		SHIELD, Splash, KDX - Egypt, Venezuela
20	6030 441	1	78		RETAINER, KDX, .300x.900
21	5525 5654	1			REINFORCEMENT, Hand Brake Mounting, R.H.D. (XTD)
22	5525 5653	1			BRACKET, Parking Brake Mounting, R.H.D. (XTD)
23		2			BOLT, 5/16-18x3/4 Hex, (Not Serviced)
24	5207 9193	1			REINFORCEMENT, Front Floor Riser, R.H.D. (XTD)
25	5525 5655	1			REINFORCEMENT PLATE, Brake Cable, R.H.D. (XDT) ***

MODEL CODES:

72=2 DR Wagon
74=4 DR Wagon
77=Open Body 93" Whlbase
78=Open Body 103" Whlbase - Export
T=2WD
J,N=4WD
U=4WD (RHD)

BODY STYLES:

YJ=Wrangler (4X4) "S"
Weangler (4X4) SE
Wrangler (4X4) Sahara
Wrangler (4X4) Renegade
XJ=Cherokee SE
Cherokee Sport
Cherokee Country
ZJ=Grand Cherokee SE
Grand Cherokee Laredo
Grand Cherolee Limited
ZG=Grand Cherokee European
Y1=Wrangler
X1=Cherokee
Z1=Grand Cherokee
KDX=Vehicles

AR = Use as Required - = Non Illustrated Part P.A.R. = Paint as Required

« RETURN TO GROUP INDEX

PLUGS WRANGLER, YJ
Figure SYJ-305

SYJ–305

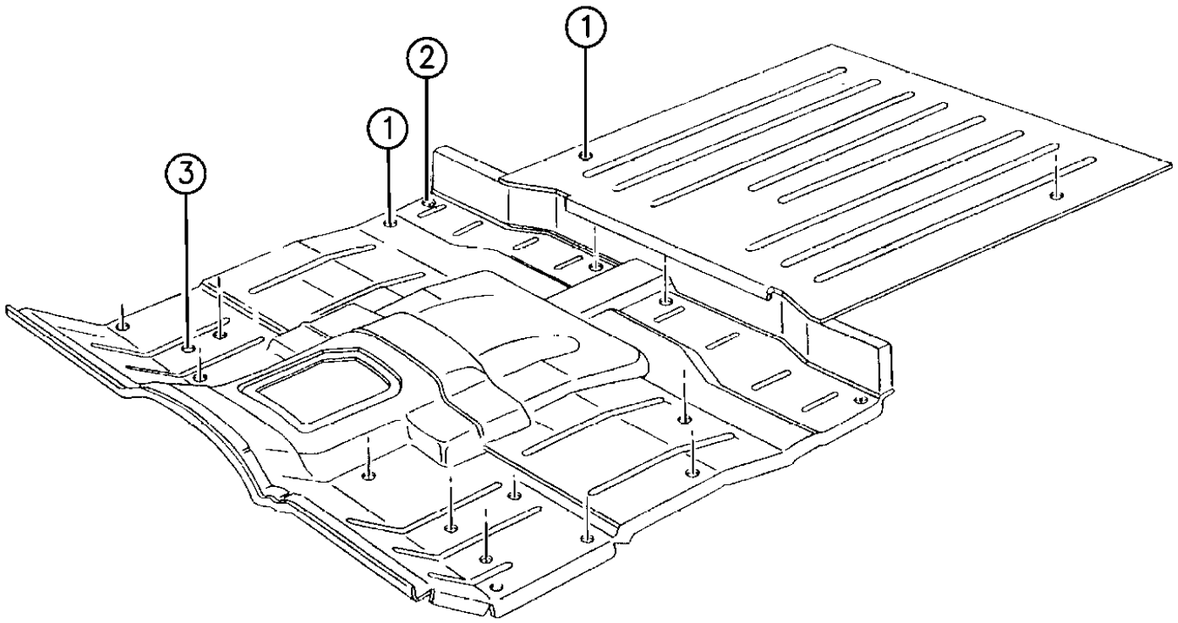

94J65 305

ITEM	PART NUMBER	QTY	BODY	MODEL	DESCRIPTION
1	5500 6578	13			PLUG, Sealing Drain
2	4586 052	2			PLUG, Front Floor Pan
3	2480 957	2			PLUG, Front Floor Pan Drain Hole Sealing

MODEL CODES:

72=2 DR Wagon
74=4 DR Wagon
77=Open Body 93" Whlbase
78=Open Body 103" Whlbase - Export
T=2WD
J,N=4WD
U=4WD (RHD)

BODY STYLES:

YJ=Wrangler (4X4) "S"
Weangler (4X4) SE
Wrangler (4X4) Sahara
Wrangler (4X4) Renegade

XJ=Cherokee SE
Cherokee Sport
Cherokee Country

ZJ=Grand Cherokee SE
Grand Cherokee Laredo
Grand Cherolee Limited
ZG=Grand Cherokee European

Y1=Wrangler
X1=Cherokee
Z1=Grand Cherokee
KDX=Vehicles

AR = Use as Required - = Non Illustrated Part P.A.R. = Paint as Required

FENDERS, FRONT WRANGLER, YJ
Figure SYJ-410

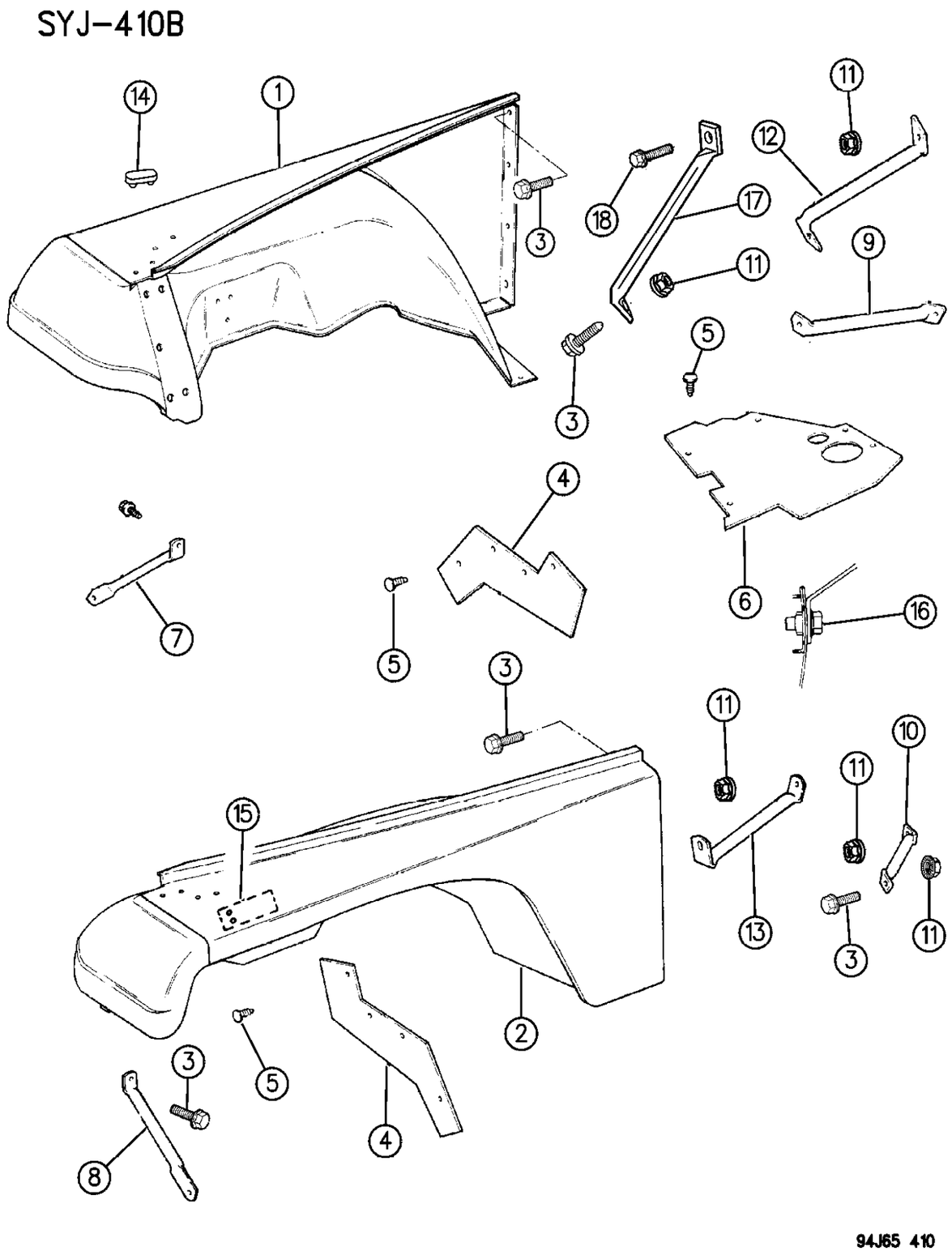

ITEM	PART NUMBER	QTY	BODY	MODEL	DESCRIPTION
1-2					FENDER
	5534 5024-5	1			w/o Renegade
	5534 5074-5	1			w/Renegade
3	J400 4455	AR			SCREW
4	5501 0840	2			SHIELD, Splash
5	6030 441	AR			FASTENER
6	5501 0838	2			SHIELD, Splash
7-8		1			SUPPORT
	5534 6064-5			YJ	
	5502 6584-5			Y1	KDX
9-10	5505 0050-1	1			SUPPORT
11	J012 0376	AR			NUT
12	5505 0052	1			SUPPORT, Right
13	5505 0049	1			SUPPORT, Left
14	J400 7541	2			BUMPER
15	5501 0948	1			PLATE, Horn Bracket
16	5501 3193	1			REINFORCEMENT, Battery Tray Support
17	5525 5652	1			BRACE, Right Fender Shield to Dash, R.H.D. (XTD)
18		1			BOLT, 5/16-18x1/2, (Not Serviced)

MODEL CODES:

72=2 DR Wagon
74=4 DR Wagon
77=Open Body 93" Whlbase
78=Open Body 103" Whlbase - Export
T=2WD
J,N=4WD
U=4WD (RHD)

BODY STYLES:

YJ=Wrangler (4X4) "S"
Weangler (4X4) SE
Wrangler (4X4) Sahara
Wrangler (4X4) Renegade
XJ=Cherokee SE
Cherokee Sport
Cherokee Country
ZJ=Grand Cherokee SE
Grand Cherokee Laredo
Grand Cherolee Limited
ZG=Grand Cherokee European
Y1=Wrangler
X1=Cherokee
Z1=Grand Cherokee
KDX=Vehicles

AR = Use as Required - = Non Illustrated Part P.A.R. = Paint as Required

« RETURN TO GROUP INDEX

FRONT FENDER & ROCKER PANEL RENEGADE YJ - 1994
Figure SYJ-420

SYJ-420A

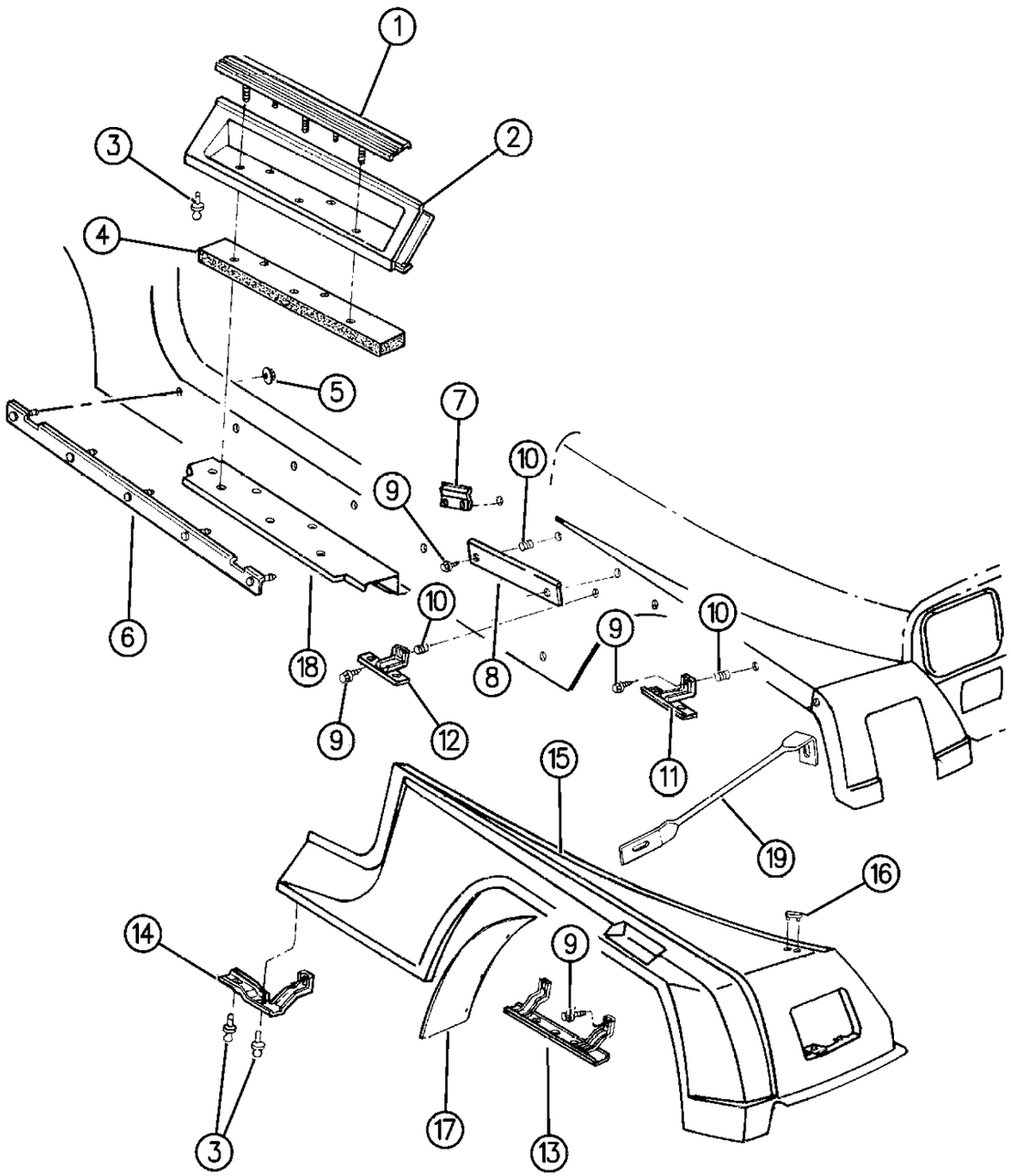

ITEM	PART NUMBER	QTY	BODY	MODEL	DESCRIPTION
1	8350 7262	1			STEP PAD ***
2	8350 7260-1	1			PANEL, Rocker Extension
3	4638 273	AR			PIN, Push
(Push Pin 4638273 is used in more than 50 places on this vehicle. It is black and should be painted as required.)					
4	8350 7263	1			SPACER, Step Pad Side
5	6501 859	AR			NUT
6	4419 508	2			RETAINER
7	4419 509	1			RETAINER
8	8350 7264-5	1			RETAINER
9	6501 212	AR			BOLT
10	3420 1595	AR			RIVNUT ***
11	8350 7253	2			SUPPORT, Fender Ext. Upper Wheelhouse Front
12	8350 7254	2			SUPPORT, Fender Ext. Upper Wheelhouse Rear
13	4638 274-5	1			SUPPORT, Fender Ext. Lower Rear
14	4419 506-7	1			SUPPORT, Rocker Ext. Panel to Fender Ext. Panel
15	8350 7250-1	1			PANEL, Front Fender Ext.
16	8350 7259	2			BUMPER, Hood
17	4713 214	2			PANEL, Front Fender Wheel Opening Rear
18	5500 9130-1	1			SUPPORT, Body Side Step
19	4728 462-3	1			BRACE

MODEL CODES:

72=2 DR Wagon
74=4 DR Wagon
77=Open Body 93" Whlbase
78=Open Body 103" Whlbase - Export
T=2WD
J,N=4WD
U=4WD (RHD)

BODY STYLES:

YJ=Wrangler (4X4) "S"
Weangler (4X4) SE
Wrangler (4X4) Sahara
Wrangler (4X4) Renegade

XJ=Cherokee SE
Cherokee Sport
Cherokee Country

ZJ=Grand Cherokee SE
Grand Cherokee Laredo
Grand Cherolee Limited
ZG=Grand Cherokee European

Y1=Wrangler
X1=Cherokee
Z1=Grand Cherokee
KDX=Vehicles

AR = Use as Required - = Non Illustrated Part P.A.R. = Paint as Required

HOOD, LOCK AND CATCHES WRANGLER, YJ
Figure SYJ-510

SYJ-510A

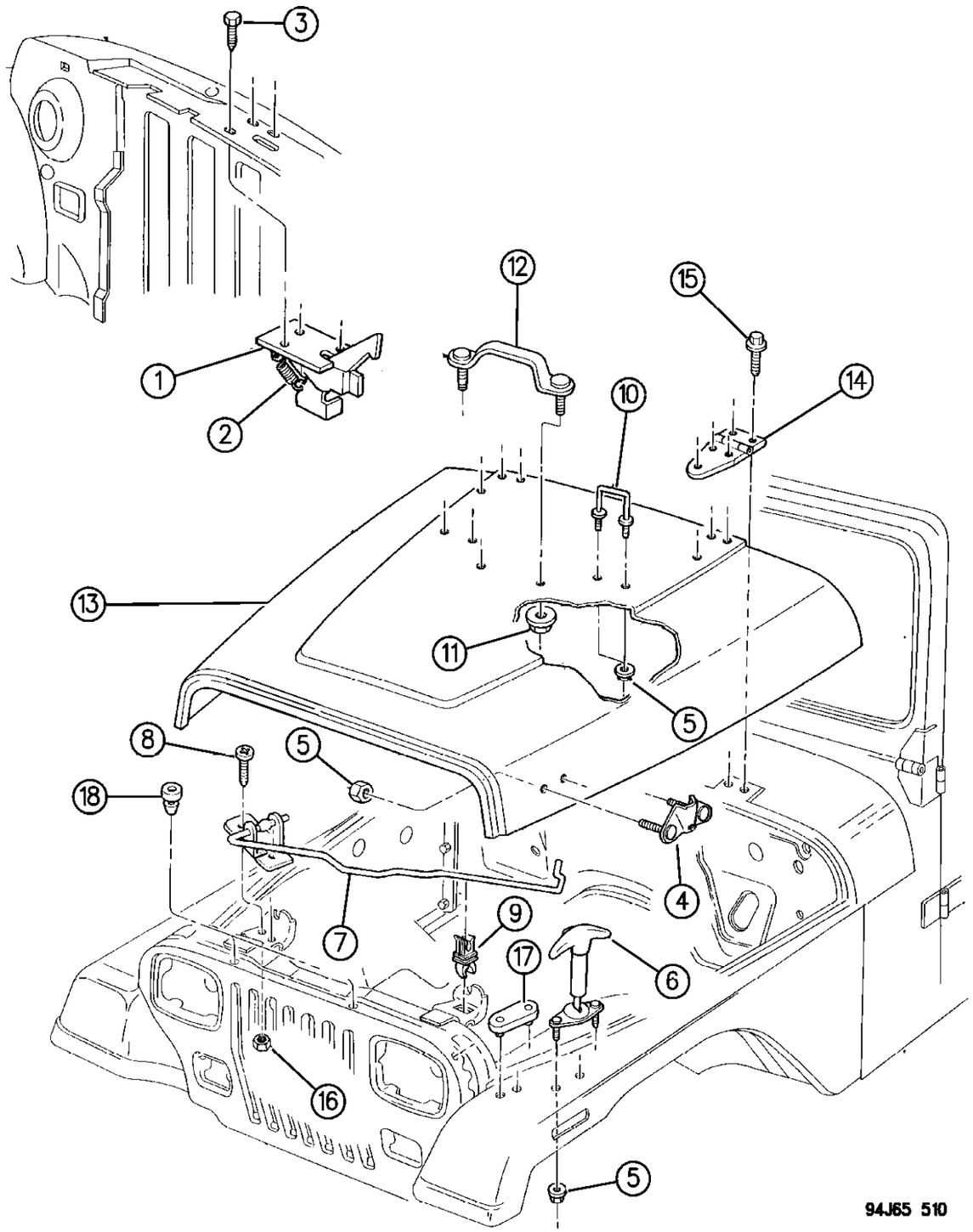

ITEM	PART NUMBER	QTY	BODY	MODEL	DESCRIPTION
1	5507 4952	1			HOOK ASSEMBLY, Hood
2	J097 8984	1			SPRING
3		3			SCREW, .250-20x.625, Not Serviced
4	5500 9343	2			BRACKET
5	J027 1172	AR			NUT
6	5500 9428	2			CATCH
7	5507 5538	1			ROD
8	6034 980	2			SCREW
9	J400 7456	1			RETAINER
10					BUMPER
	5517 6236	2			1994,95, Up to 8-1-95
	5507 5590	2			1995, After 8-1-95
11	6025 001	2			NUT
12	5525 4839	1			LOOP, Footman
13					HOOD ***
	5534 5059	1			1994.95, Up to 8-1-95
	5517 6386	1			1995, After 8-1-95
14	5507 4809	2			HINGE, Hood
15	J400 7530	10			SCREW
16	J400 5237	2			NUT
17	J400 7541	2			BUMPER, Plug
18	J400 7504	2			BUMPER, Hood Bumper

MODEL CODES:

72=2 DR Wagon
74=4 DR Wagon
77=Open Body 93" Whlbase
78=Open Body 103" Whlbase - Export
T=2WD
J,N=4WD
U=4WD (RHD)

BODY STYLES:

YJ=Wrangler (4X4) "S"
Weangler (4X4) SE
Wrangler (4X4) Sahara
Wrangler (4X4) Renegade

XJ=Cherokee SE
Cherokee Sport
Cherokee Country

ZJ=Grand Cherokee SE
Grand Cherokee Laredo
Grand Cherolee Limited
ZG=Grand Cherokee European

Y1=Wrangler
X1=Cherokee
Z1=Grand Cherokee
KDX=Vehicles

AR = Use as Required - = Non Illustrated Part P.A.R. = Paint as Required

« RETURN TO GROUP INDEX

PANELS, COWL AND DASH WRANGLER, YJ
Figure SYJ-610

SYJ-610A

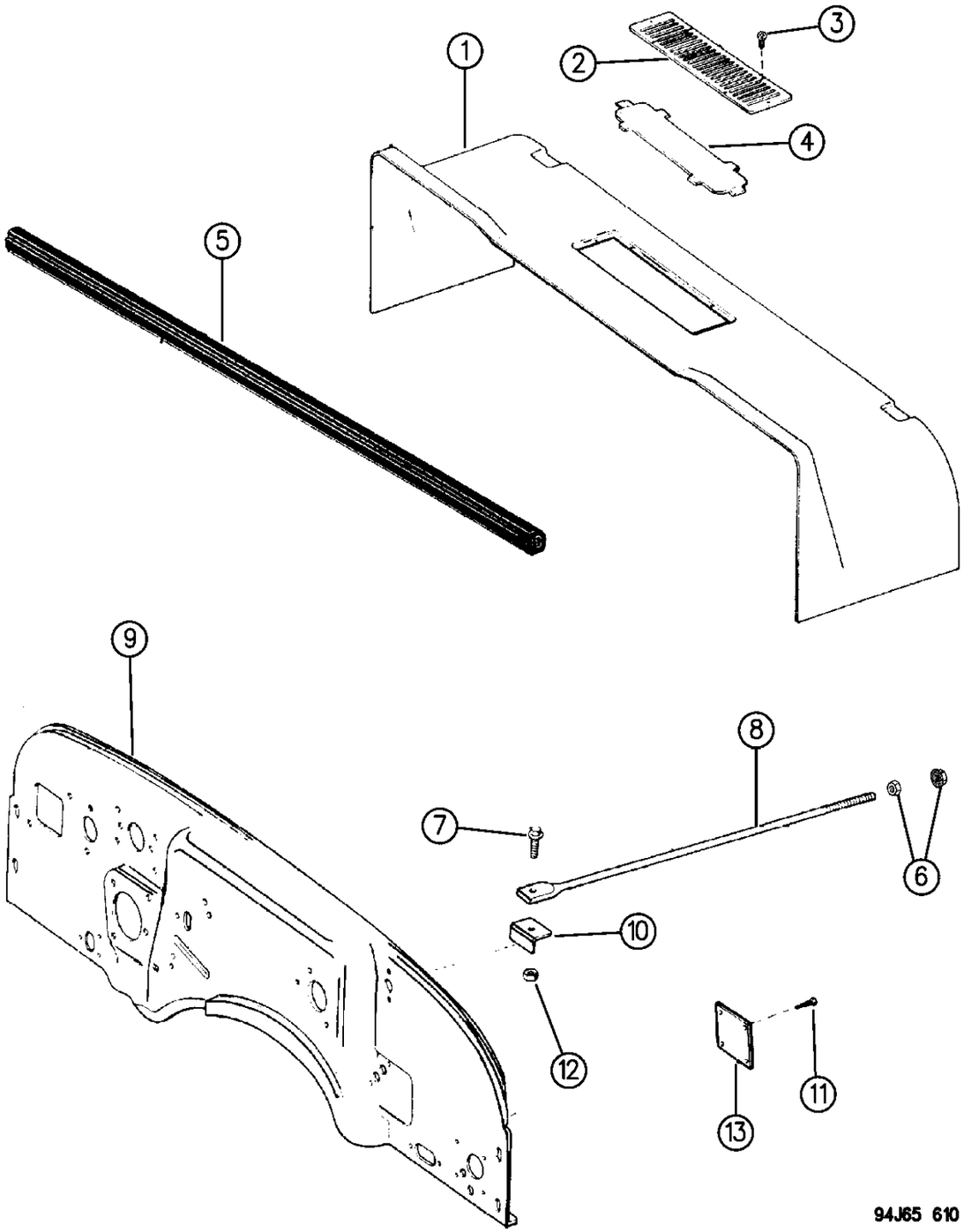

ITEM	PART NUMBER	QTY	BODY	MODEL	DESCRIPTION
1	5700 1485	1			PANEL, Cowl
2					GRILLE, Cowl Top
	5534 4749	1			1994
	5534 4749	1			1995, Up to 10-10-94
	5517 5729	1			1995, After 10-10-94
3		6			SCREW, (.164-15x.750), (Not Serviced)
4	5501 6164	1			SCREEN, Grille
5	5500 8119	1			SEAL, Cowl to Hood
6	6035 050	2			NUT
7	J080 8319	2			BOLT
8	5505 0119	2			ROD
9					PANEL, Dash
	5534 6146	1			
	5534 6460	1			R.H.D., (XDT)
10	J098 7066	2			BRACKET
11	J097 4764	4			SCREW, Cover Plate
12	J012 0368	2			NUT, Hex
13	J546 2728	1			COVER, PLATE, Heater Blower Motor, KDX - Venezuela

MODEL CODES:

72=2 DR Wagon
74=4 DR Wagon
77=Open Body 93" Whlbase
78=Open Body 103" Whlbase - Export
T=2WD
J,N=4WD
U=4WD (RHD)

BODY STYLES:

YJ=Wrangler (4X4) "S"
Weangler (4X4) SE
Wrangler (4X4) Sahara
Wrangler (4X4) Renegade

XJ=Cherokee SE
Cherokee Sport
Cherokee Country

ZJ=Grand Cherokee SE
Grand Cherokee Laredo
Grand Cherolee Limited
ZG=Grand Cherokee European

Y1=Wrangler
X1=Cherokee
Z1=Grand Cherokee
KDX=Vehicles

AR = Use as Required - = Non Illustrated Part P.A.R. = Paint as Required

« RETURN TO GROUP INDEX

WINDSHIELD FRAME, HINGES, AND SEALS WRANGLER, YJ
Figure SYJ-710

SYJ-710A

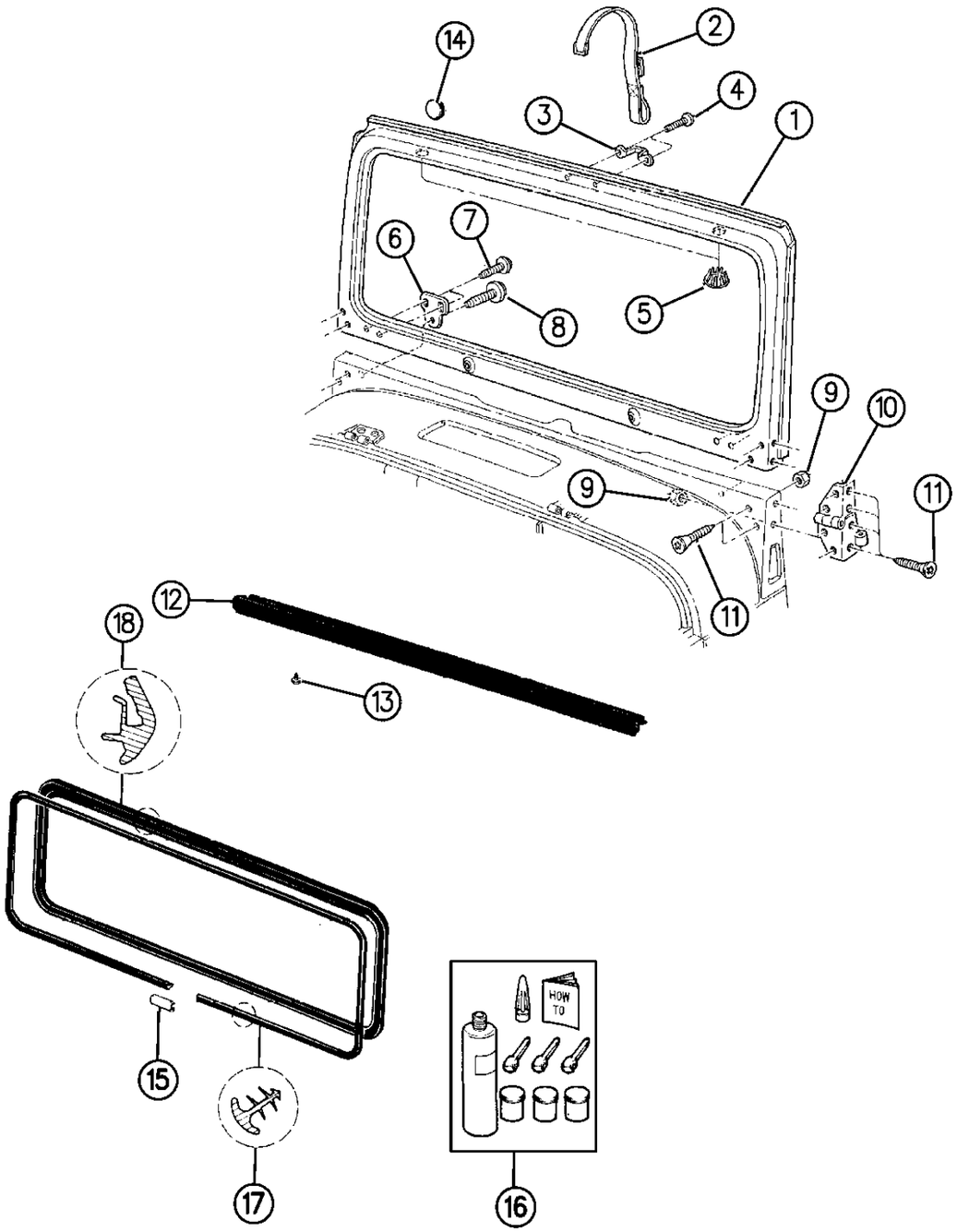

ITEM	PART NUMBER	QTY	BODY	MODEL	DESCRIPTION
1	5517 4576	1			FRAME, Windshield
2	J545 8890	2			STRAP, Windshield, Egypt
3	5501 3666	1			LOOP, Footman, Black
4		2			SCREW, .190-24x.500, (Not Serviced)
5	J043 2453	2			PLUG
6	J545 3945	2			BRACKET, Windshield Hold Down
7	J400 7220	4			SCREW
8	J400 7481	2			SCREW
9	J012 0376	16			NUT
10	5507 4880-1	1			HINGE, Windshield
11	J400 4956	16			SCREW, (.312-18x.880)
12					SEAL, Windshield to Cowl
	5500 9127	1			1994
	5517 5778	1			1995
13					SCREW
	J400 4171	9			1994, Up to 5-3-94
	6035 216	9			1994, After 5-3-94, 1995
14	J400 7084	3			PLUG, Windshield Filler, KDX-Egypt, Venezuela
15	5513 4656	1			CAP
16	8310 0051	AR			MOUNTING PACKAGE, Windshield ***
17		1			MOULDING, Windshield Reveal
	5513 4655				1994
	5517 5169				1995
18	5501 9988	1			MOULDING, Garnish
-	4864 015	1			INSTALLATION PACKAGE, Windshield ***

MODEL CODES:

72=2 DR Wagon
74=4 DR Wagon
77=Open Body 93" Whlbase
78=Open Body 103" Whlbase - Export
T=2WD
J,N=4WD
U=4WD (RHD)

BODY STYLES:

YJ=Wrangler (4X4) "S"
Weangler (4X4) SE
Wrangler (4X4) Sahara
Wrangler (4X4) Renegade
XJ=Cherokee SE
Cherokee Sport
Cherokee Country
ZJ=Grand Cherokee SE
Grand Cherokee Laredo
Grand Cherolee Limited
ZG=Grand Cherokee European
Y1=Wrangler
X1=Cherokee
Z1=Grand Cherokee
KDX=Vehicles

AR = Use as Required - = Non Illustrated Part P.A.R. = Paint as Required

« RETURN TO GROUP INDEX

GLASS, MIRROR, INSIDE REAR VIEW LESS WORLD CAB WRANGLER, YJ
Figure SYJ-720

SYJ–720

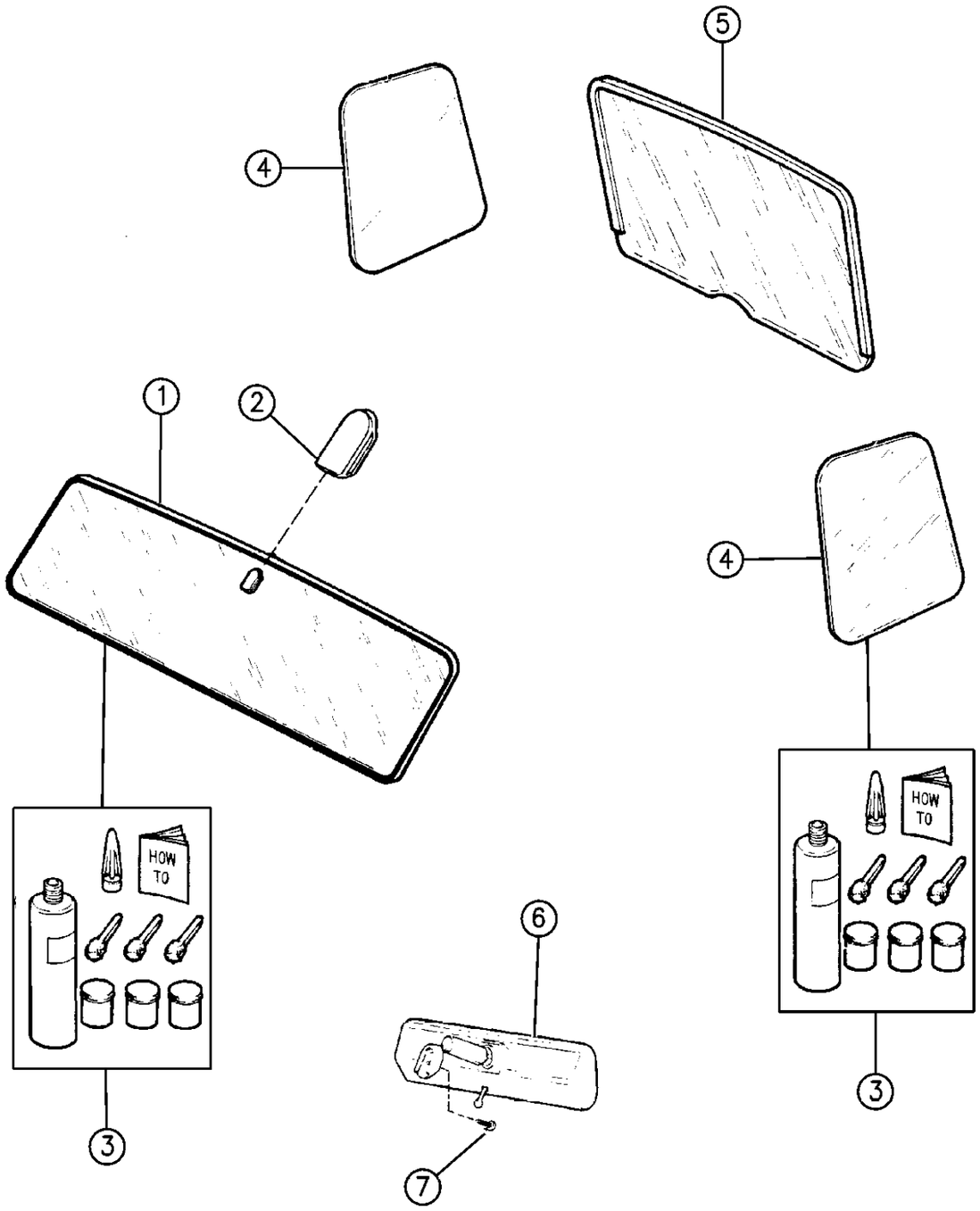

ITEM	PART NUMBER	QTY	BODY	MODEL	DESCRIPTION
1	5513 4740	1			GLASS, Windshield w/tinted glass
2	J365 7374	1			SUPPORT, Inside Rear View Mirror Mounting (a)
3	8310 0051	1			MOUNTING PACKAGE, Windshield ***
4					GLASS, Quarter w/tinted glass
	5500 8266-7	1			Tinted
	5513 5180-1	1			Solarban, Up to 1-10-94
	5517 4996-7				Privacy, Gray Tint, After 1-10-94
5					GLASS, Lift Door w/tinted glass
	4637 758	1			w/o Rear Window Defogger
	4637 759	1			w/ Rear Window Defogger
6	5500 9784	1			MIRROR, Inside Rear View
7	J400 5766	1			SCREW

(a) The Mirror Support is replacing Mirror Mounting Kit. When installing a Mirror Support, use Locktite #312 Adhesive and the Accelerator for Locktite Adhesive #312.

MODEL CODES:

72=2 DR Wagon	77=Open Body 93" Whlbase	T=2WD	U=4WD (RHD)
74=4 DR Wagon	78=Open Body 103" Whlbase - Export	J,N=4WD	

BODY STYLES:

YJ=Wrangler (4X4) "S"	XJ=Cherokee SE	ZJ=Grand Cherokee SE	Y1=Wrangler
Weangler (4X4) SE	Cherokee Sport	Grand Cherokee Laredo	X1=Cherokee
Wrangler (4X4) Sahara	Cherokee Country	Grand Cherolee Limited	Z1=Grand Cherokee
Wrangler (4X4) Renegade		ZG=Grand Cherokee European	KDX=Vehicles

AR = Use as Required - = Non Illustrated Part P.A.R. = Paint as Required

« RETURN TO GROUP INDEX

GLASS EUROPE, MIDEAST, KDX WRANGLER, Y1
Figure SYJ-730

SYJ–730

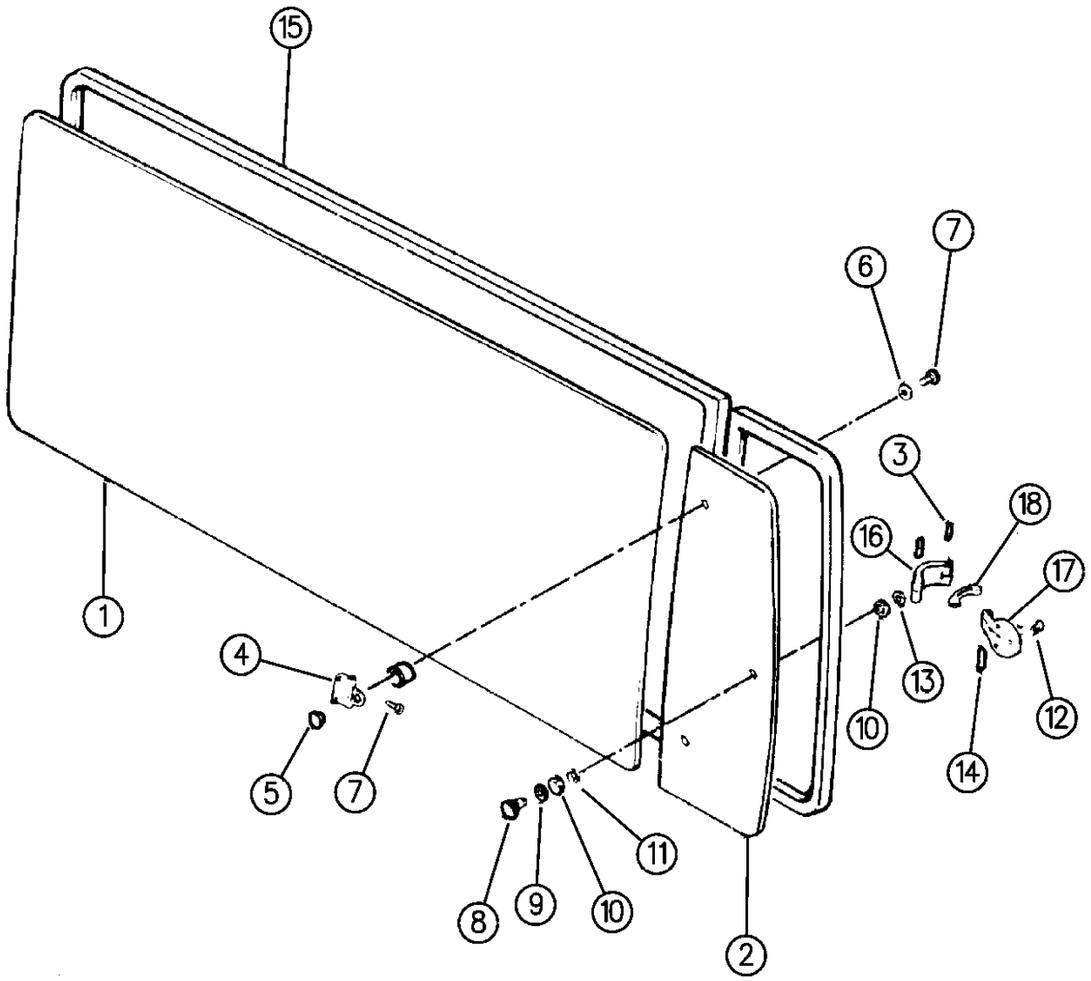

ITEM	PART NUMBER	QTY	BODY	MODEL	DESCRIPTION
1					GLASS, Quarter Tinted
	J805 2262	1	77		Right, KDX - Venezuela
	J805 2150	1	77		Left, KDX - Venezuela
	J805 2263	1	78		Right, KDX - Egypt, Venezuela
	J805 2153	1	78		Left, KDX - Egypt, Venezuela
2	9500 0620-1	1			GLASS, Flipper Window, Tinted, KDX - Egypt, Venezuela
3	9422 127	2			PIN
4	9500 0617	4			HINGE
5	J805 2419	4			BUSHING
6	J805 2417	4			CAP
7	J805 2457	8			SCREW
8	J364 6215	2			STUD
9	J400 3578	2			WASHER, Wave
10	J364 6217	8			WASHER
11	J364 6218	2			WASHER
12	J805 2418	4			SCREW
13		2			NUT, (Not Serviced)
14	9422 127	2			PIN, Spring
15					WEATHERSTRIP, Quarter Glass, KDX - Egypt, Venezuela
	J805 2187	2	77		
	J805 2163	2	78		
16	J364 6460	1			HANDLE, Flipper Window
17	J805 2439	1			BRACKET, Flipper Window
18	J364 6461	1			LINK, Flipper Window

MODEL CODES:

72=2 DR Wagon
74=4 DR Wagon
77=Open Body 93" Whlbase
78=Open Body 103" Whlbase - Export
T=2WD
J,N=4WD
U=4WD (RHD)

BODY STYLES:

YJ=Wrangler (4X4) "S"
Weangler (4X4) SE
Wrangler (4X4) Sahara
Wrangler (4X4) Renegade
XJ=Cherokee SE
Cherokee Sport
Cherokee Country
ZJ=Grand Cherokee SE
Grand Cherokee Laredo
Grand Cherolee Limited
ZG=Grand Cherokee European
Y1=Wrangler
X1=Cherokee
Z1=Grand Cherokee
KDX=Vehicles

AR = Use as Required - = Non Illustrated Part P.A.R. = Paint as Required

« RETURN TO GROUP INDEX

LIFT DOOR GLASS AND RELATED PARTS WITH HARD TOP ENCLOSURE WRANGLER, YJ
Figure SYJ-740

SYJ–740A

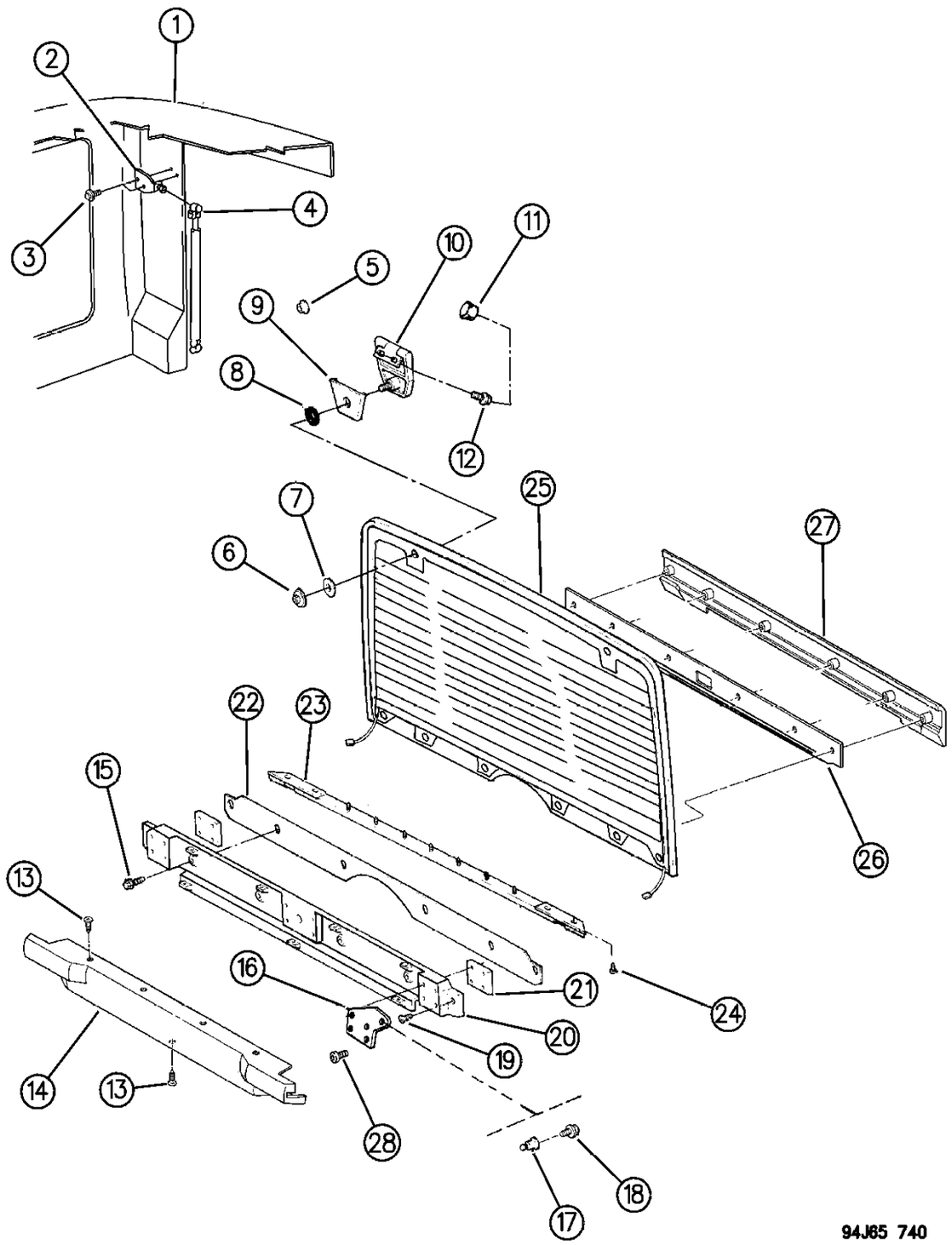

ITEM	PART NUMBER	QTY	BODY	MODEL	DESCRIPTION
1		1			ENCLOSURE ASSEMBLY, (reference only) ***
2	5500 9992	2			BRACKET, Ball Stud Mounting
	J369 6930	2			BALL STUD, (Included in Bracket) ***
3	J400 7348	6			BOLT, Ball Stud Bracket Mounting
4					CYLINDER, Liftglass Support
	5502 9560	1			w/Rear Window Defroster
	5502 9558	1			w/o Rear Window Defroster
5					PLUG
	J400 7473	2			For wire access hole in hard top (w/rear window defroster)
	J400 7443	2			For harness holes (used w/o rear window defroster)
6	J400 7384	2			NUT and WASHER, Liftgate Glass
7	5500 9434	2			BUSHING, Collar, Hinge to Glass
8	5500 9788	2			SEAL, Hinge to Liftglass
9	5500 9433	2			GASKET, Hinge to Glass
10	5507 4548-9	1			HINGE ASSEMBLY, Liftglass
11	5501 9378	1			CAP, Protective Cover, Hinge Stud
12	6034 500	4			SCREW and WASHER, Liftglass Hinge to Hardtop
13		7			SCREW, Liftglass Moulding (J9420554 not serviced, use .164-18x1.00)
14	5507 5539	1			MOULDING, Liftglass Lower Inner
15	J400 7378	4			SCREW
16	5507 4941	2			PLATE, Ball Stud
17	J400 6230	2			BALL STUD ***
18	J400 7382	2			SCREW
19	J400 7379	2			SCREW
20	5507 4940	1			PANEL, Liftglass Lower
21	5500 9868	2			PLATE, Tapping
22	5500 9577	1			GASKET, Liftglass Moulding to Glass
23	5500 9398	1			WEATHERSTRIP ASSEMBLY, Lift Glass ***
24	J400 2465	4			SCREW, Liftglass Weatherstrip
25					GLASS, Lift, Tinted
	4637 759	1			w/Rear Window Defroster
	4637 758	1			w/o Rear Window Defroster
26	5500 9576	1			GASKET, Outer Moulding to Glass
-	J098 1638	1			TAPE, Plastic Sealer 3/16"x24"
27		1			MOULDING, Liftglass Outer
					Black
	5CU3 6LCX				Up to 3-4-94
	5DZ5 9PCX				After 3-4-94
					Radiant Red
	5CU3 6LRC				Up to 3-8-94
	5DZ5 9PRC				After 3-8-94

MODEL CODES:

72=2 DR Wagon
74=4 DR Wagon
77=Open Body 93" Whlbase
78=Open Body 103" Whlbase - Export
T=2WD
J,N=4WD
U=4WD (RHD)

BODY STYLES:

YJ=Wrangler (4X4) "S"
Weangler (4X4) SE
Wrangler (4X4) Sahara
Wrangler (4X4) Renegade
XJ=Cherokee SE
Cherokee Sport
Cherokee Country
ZJ=Grand Cherokee SE
Grand Cherokee Laredo
Grand Cherolee Limited
ZG=Grand Cherokee European
Y1=Wrangler
X1=Cherokee
Z1=Grand Cherokee
KDX=Vehicles

AR = Use as Required - = Non Illustrated Part P.A.R. = Paint as Required

LIFT DOOR GLASS AND RELATED PARTS WITH HARD TOP ENCLOSURE WRANGLER, YJ
Figure SYJ-740

SYJ–740A

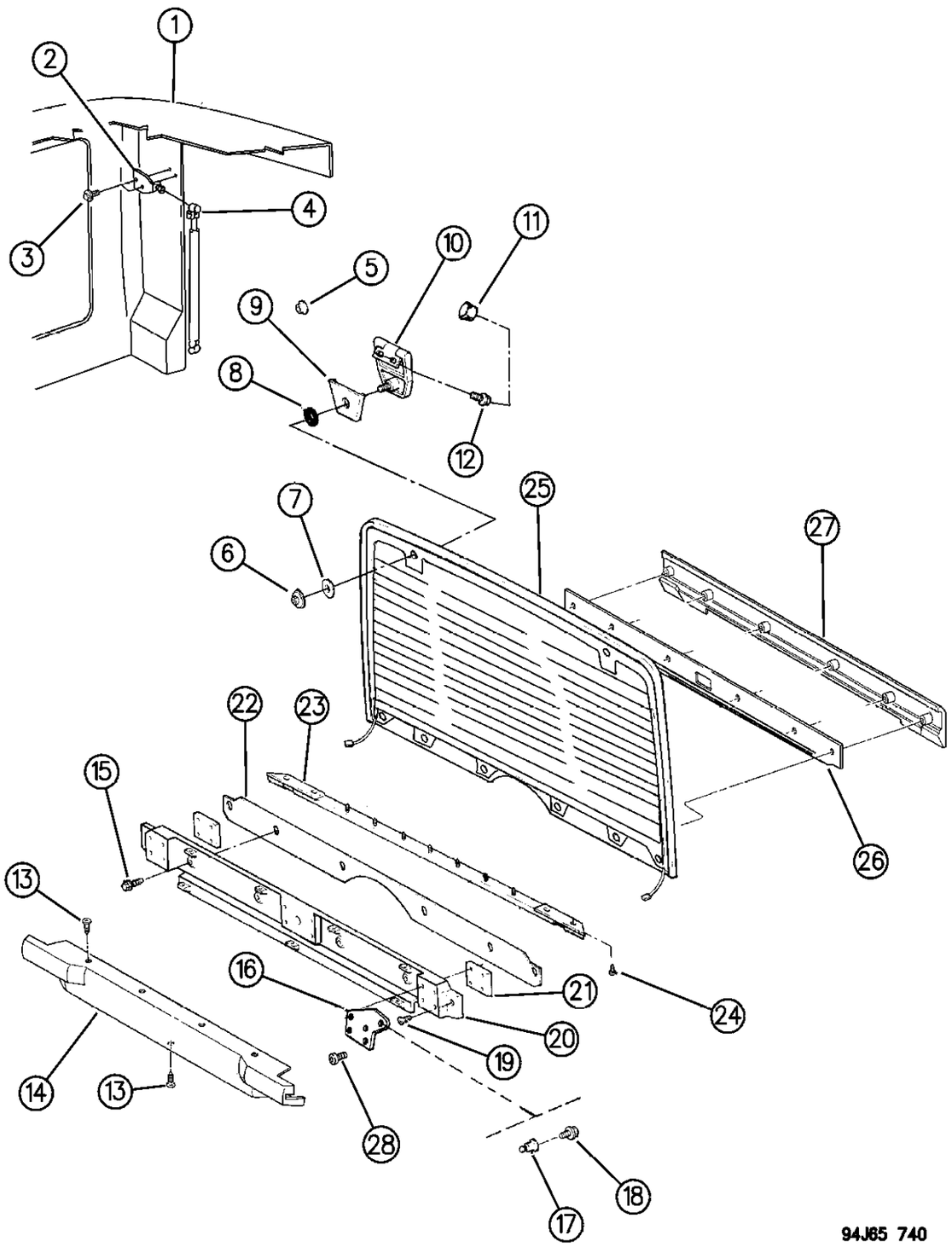

ITEM	PART NUMBER	QTY	BODY	MODEL	DESCRIPTION
					Spice
	5CU3 6LTB				Up to 2-23-94
	5DZ5 9PTB				After 2-23-94
					Iris Blue/White
	5CU3 6LWC				Up to 3-8-94
	5DZ5 9PWC				After 3-8-94
28	J400 7387	8			SCREW, .190-24x.120

MODEL CODES:

72=2 DR Wagon
74=4 DR Wagon
77=Open Body 93" Whlbase
78=Open Body 103" Whlbase - Export
T=2WD
J,N=4WD
U=4WD (RHD)

BODY STYLES:

YJ=Wrangler (4X4) "S"
Weangler (4X4) SE
Wrangler (4X4) Sahara
Wrangler (4X4) Renegade
XJ=Cherokee SE
Cherokee Sport
Cherokee Country
ZJ=Grand Cherokee SE
Grand Cherokee Laredo
Grand Cherolee Limited
ZG=Grand Cherokee European
Y1=Wrangler
X1=Cherokee
Z1=Grand Cherokee
KDX=Vehicles

AR = Use as Required - = Non Illustrated Part P.A.R. = Paint as Required

PANELS, BODY SIDE WRANGLER, YJ
Figure SYJ-810

SYJ-810

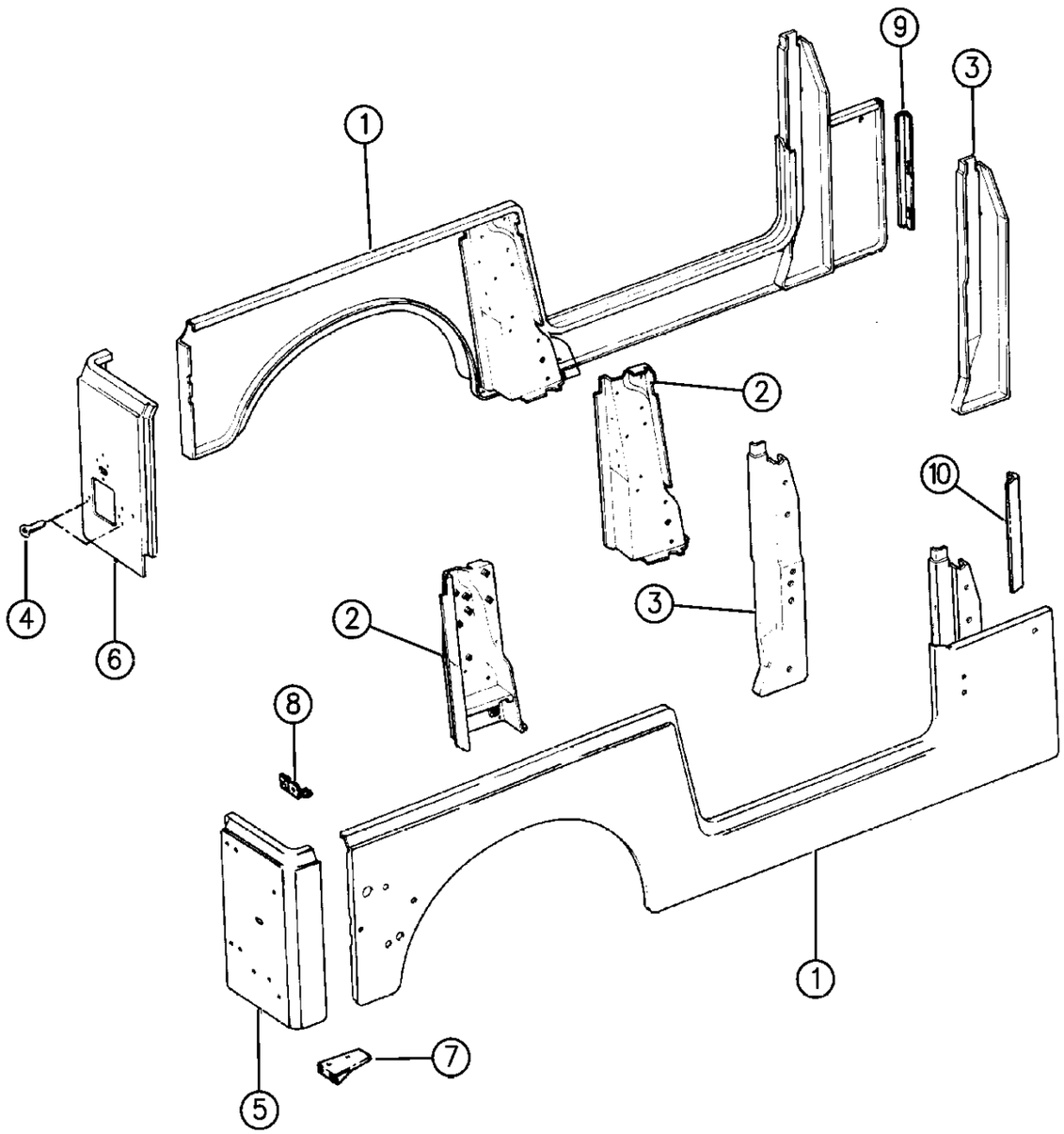

ITEM	PART NUMBER	QTY	BODY	MODEL	DESCRIPTION
1					PANEL, Side
	4761 948-9	1			1994
	4798 282-3	1			1995
	5500 9786-7	1			KDX - Egypt, Venezuela
2		1			SUPPORT, Side Panel
	5517 4560-1				Up to 11-21-94
	5517 6164-5				After 11-21-94
3	5525 4610-1	1			PILLAR, Cowl
4	6035 004	2			SCREW, Striker Mounting Bracket
5	5505 0036	1			PANEL, Right
6	8350 3579	1			PANEL, Left
7	5500 9132	1			REINFORCEMENT, Lower Hinge
8	5500 8262	1			REINFORCEMENT, Upper Hinge
9	J068 3529	1			REINFORCEMENT, Side Panel, Left
10	J068 3530	1			REINFORCEMENT, Side Panel, Right

MODEL CODES:

72=2 DR Wagon
74=4 DR Wagon
77=Open Body 93" Whlbase
78=Open Body 103" Whlbase - Export
T=2WD
J,N=4WD
U=4WD (RHD)

BODY STYLES:

YJ=Wrangler (4X4) "S"
Weangler (4X4) SE
Wrangler (4X4) Sahara
Wrangler (4X4) Renegade

XJ=Cherokee SE
Cherokee Sport
Cherokee Country

ZJ=Grand Cherokee SE
Grand Cherokee Laredo
Grand Cherolee Limited
ZG=Grand Cherokee European

Y1=Wrangler
X1=Cherokee
Z1=Grand Cherokee
KDX=Vehicles

AR = Use as Required - = Non Illustrated Part P.A.R. = Paint as Required

QUARTER PANEL RENEGADE YJ 1994
Figure SYJ-910

SYJ-910

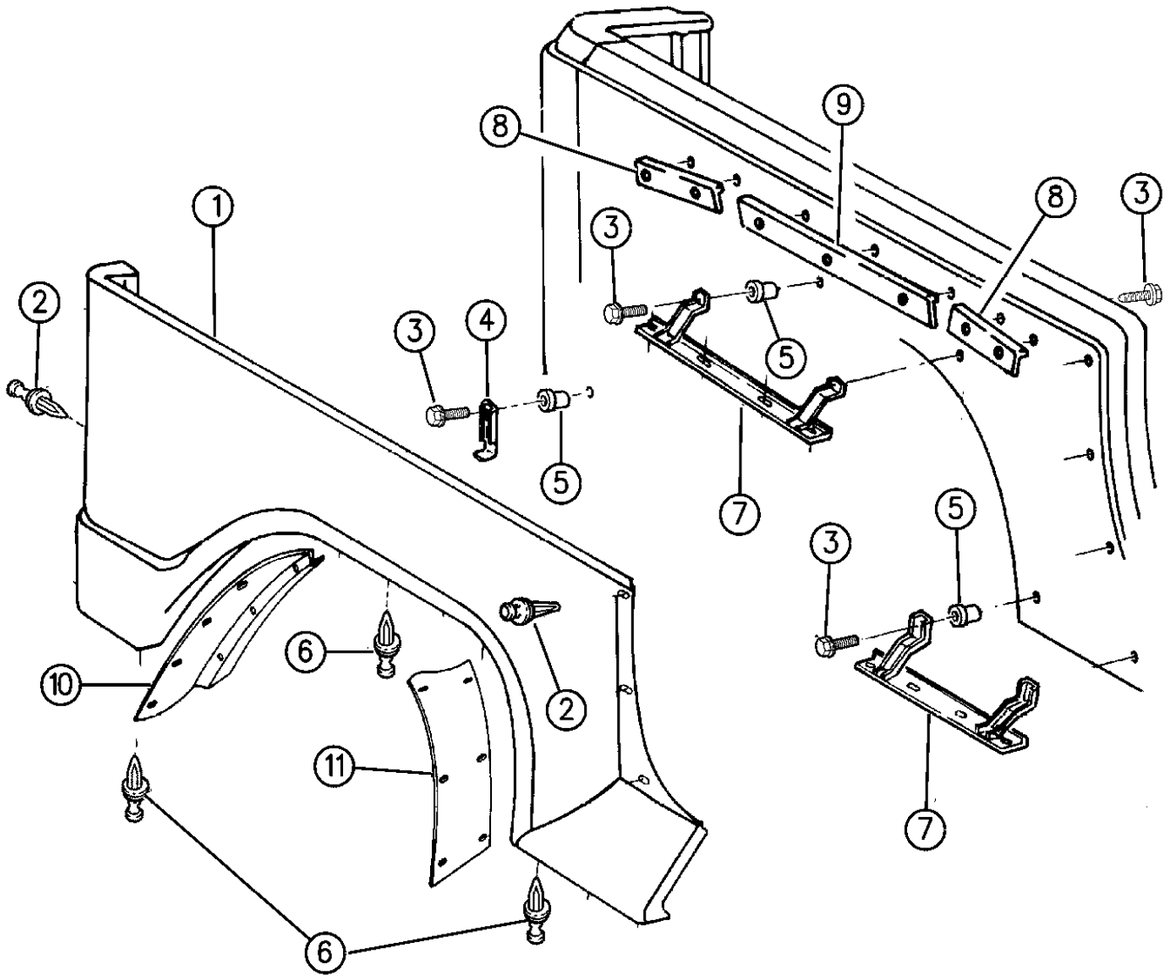

ITEM	PART NUMBER	QTY	BODY	MODEL	DESCRIPTION
1	4419 522-3	1			PANEL, Quarter Extension
2	4638 136	AR			PUSH PIN, P.A.R. ***
3	6501 212	AR			BOLT
4	4638 277	2			SUPPORT, Qtr. Ext. Rear Lower
5	3420 1595	AR			RIVNUT ***
6	4638 273	AR			PUSH PIN ***
7	8350 7266	2			SUPPORT, Qtr. Ext. To Rocker Ext. Lower
8	4419 524	4			RETAINER, Qtr. Ext. Upper End
9	4419 521	2			RETAINER, Qtr. Ext. Upper Center
10	4713 212-3	1			PANEL, Rear Qtr. Wheel Opening - Rr.
11	4713 211	1			PANEL, Rear Qtr. Wheel Open Front
	4419 525	1			SUPPORT, Quarter Extension Rear Lower

MODEL CODES:

72=2 DR Wagon
74=4 DR Wagon
77=Open Body 93" Whlbase
78=Open Body 103" Whlbase - Export
T=2WD
J,N=4WD
U=4WD (RHD)

BODY STYLES:

YJ=Wrangler (4X4) "S"
Weangler (4X4) SE
Wrangler (4X4) Sahara
Wrangler (4X4) Renegade

XJ=Cherokee SE
Cherokee Sport
Cherokee Country

ZJ=Grand Cherokee SE
Grand Cherokee Laredo
Grand Cherolee Limited
ZG=Grand Cherokee European

Y1=Wrangler
X1=Cherokee
Z1=Grand Cherokee
KDX=Vehicles

AR = Use as Required - = Non Illustrated Part P.A.R. = Paint as Required

« RETURN TO GROUP INDEX

TOP ENCLOSURE, HARD WRANGLER, YJ
Figure SYJ-1110

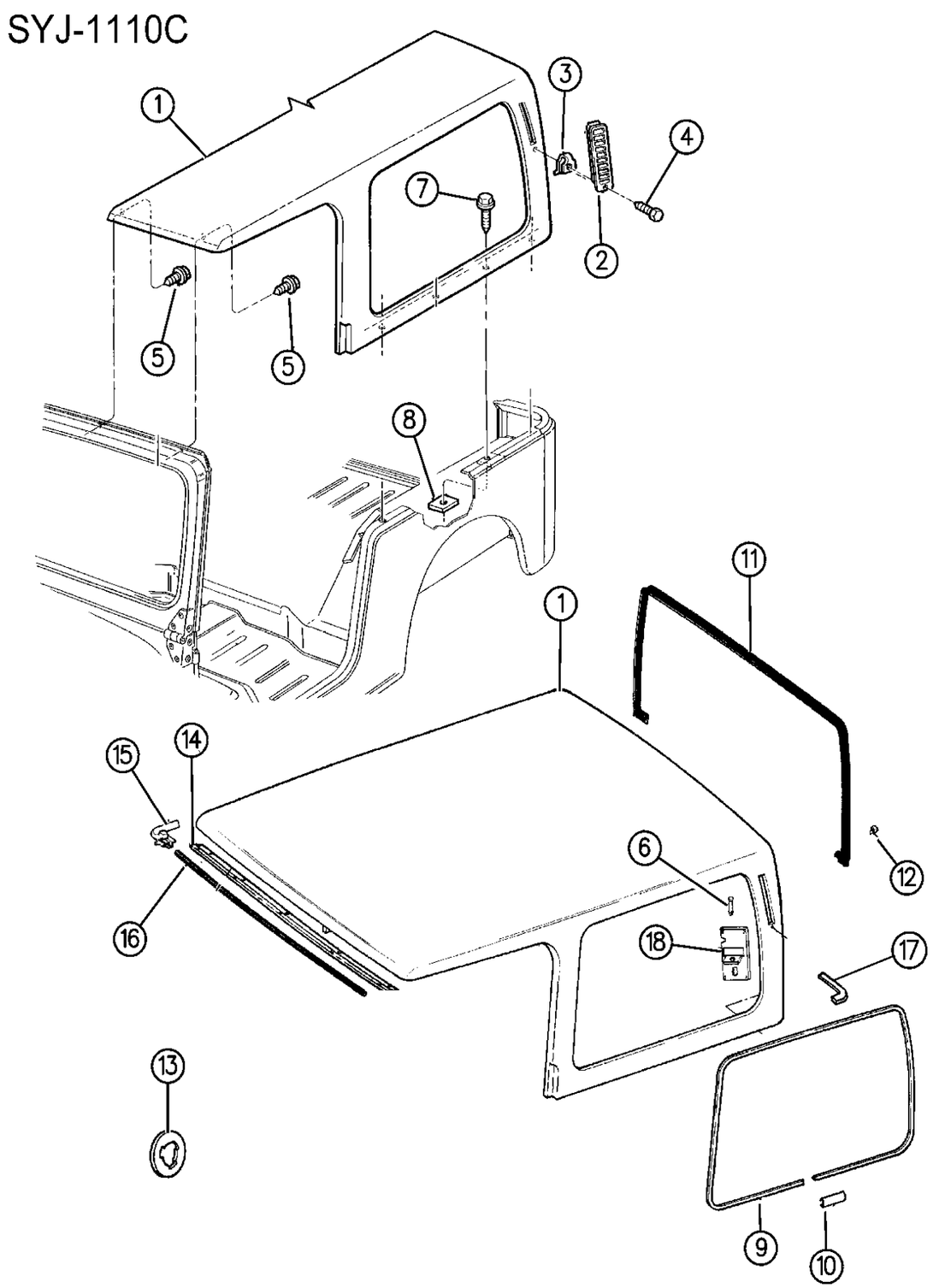

ITEM	PART NUMBER	QTY	BODY	MODEL	DESCRIPTION
1		1			TOP ENCLOSURE, Hard ***
					Black
	5CU2 5LCX				Up to 3-4-94
	5DZ5 5PCX				After 3-4-94
					Red
	5CU2 5LRC				Up to 3-8-94
	5DZ5 5PRC				After 3-8-94
					Spice
	5CU2 5LTB				Up to 2-23-94
	5DZ5 5PTB				After 2-23-94
					Iris Blue White
	5CU2 5LWC				Up to 3-8-94
	5DZ5 5PWC				After 3-8-94
2	5500 8540-1	1			EXHAUSTER, Air ***
3	J400 6402	2			NUT
4	6034 207	2			SCREW
5	6034 909	7			SCREW, .190-16x.500
6	5501 5114	2			PIN
7	J400 7007	8			SCREW
8	J096 8155	8			TAPPING PLATE
9		2			MOULDING, Quarter Window
	5513 4654				1994
	5517 5170				1995
10	5513 4656	2			CAP, End
11	5501 0064	1			WEATHERSTRIP, Lift Door Glass
12	J400 2465	4			SCREW
13		AR			SHIM
	J400 5677				.04" Thick
	J400 5678				.09" Thick
14	5534 4543	1			PLATE, Hardtop Header Attach to Windshield
15	5513 4536-7	1			SEAL
16	5534 4542	1			SEAL, Windshield
17		1			SEAL
	J546 3864				Right
	J546 3863				Left
18	5600 3696	1			PLATE, Hardtop Disconnect
-	J400 6788	1			RIVET, Disconnect Plate To Hardtop
-	5502 5390	1			COVER, Diconnect Plate

MODEL CODES:

72=2 DR Wagon
74=4 DR Wagon
77=Open Body 93" Whlbase
78=Open Body 103" Whlbase - Export
T=2WD
J,N=4WD
U=4WD (RHD)

BODY STYLES:

YJ=Wrangler (4X4) "S"
Weangler (4X4) SE
Wrangler (4X4) Sahara
Wrangler (4X4) Renegade

XJ=Cherokee SE
Cherokee Sport
Cherokee Country

ZJ=Grand Cherokee SE
Grand Cherokee Laredo
Grand Cherolee Limited
ZG=Grand Cherokee European

Y1=Wrangler
X1=Cherokee
Z1=Grand Cherokee
KDX=Vehicles

AR = Use as Required - = Non Illustrated Part P.A.R. = Paint as Required

« RETURN TO GROUP INDEX

SOFT TOP HARDWARE WITH HALF DOORS WRANGLER, YJ
Figure SYJ-1120

SYJ-1120

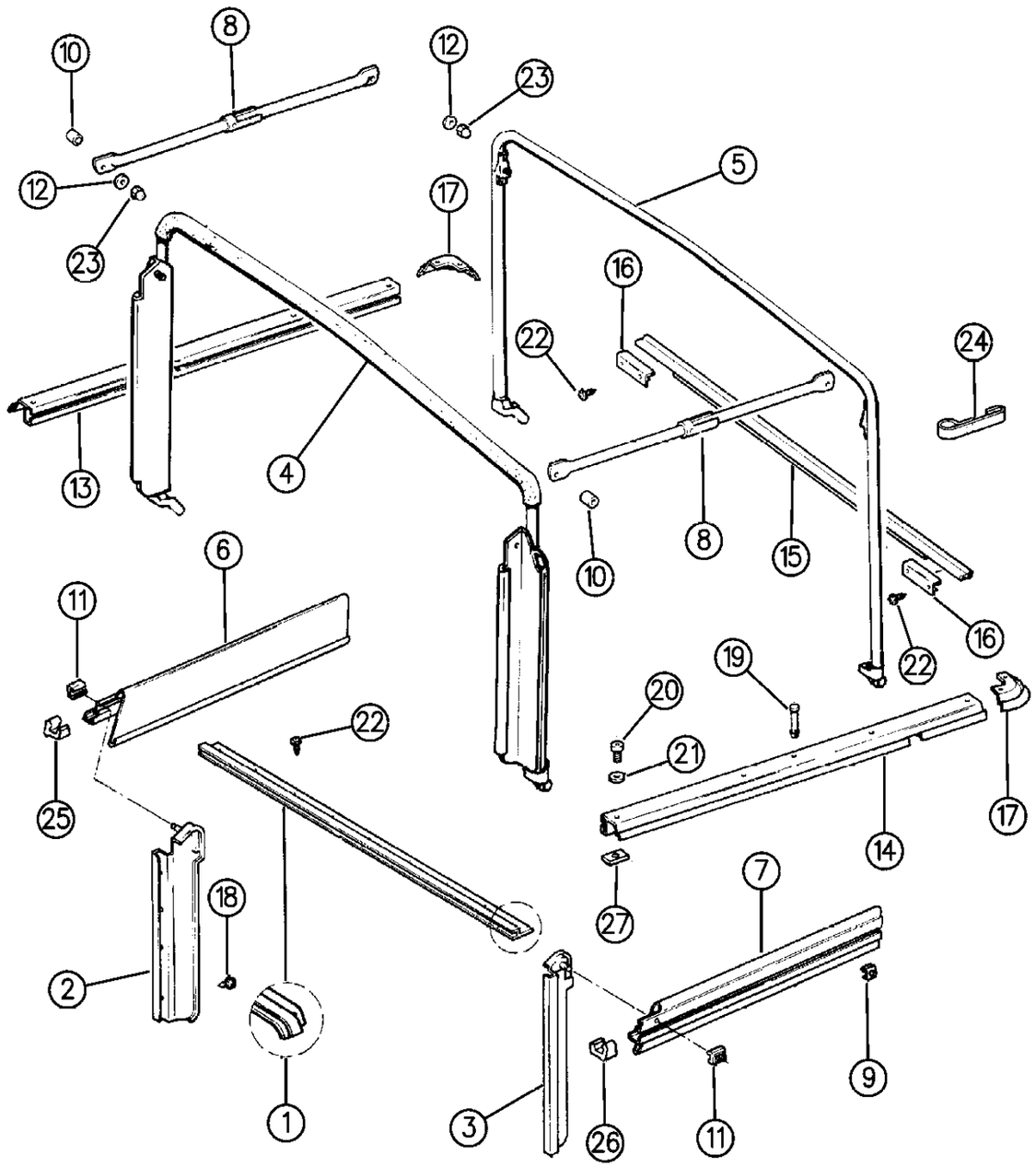

ITEM	PART NUMBER	QTY	BODY	MODEL	DESCRIPTION
1					RETAINER, Windshield
	8220 0921	1			1994
	5517 6350	1			1995
2-3		1			FLANGE, Door Sealing Front ***
	5521 5674-5	1			1994-95, Up to 4-3-95
	5517 6224-5	1			1995, After 4-3-95
4	8350 5252	1			BOW ASSEMBLY, Front Roof ***
5	5501 1006	1			BOW ASSEMBLY, Rear Roof ***
6-7	5501 0744-5	1			RAIL, Upper Door Drip
8	5521 5591	2			BAR, Spreader
9	5501 5378	10			CLIP, (includes stud)
-	J805 1615	10			STUD, (also included in the above clip)
10	5501 5108	2			SPACER, Spreader Bar
11	5501 3673	2			SLIDER, Drip Rail Lock
12	J400 7015	4			WASHER
13-14					RETAINER, Side Belt Rail
	5502 7330-1	1		77	w/93" W.B
	5501 8024-5	1		78	Front, KDX w/103" W.B.
	5501 8028-9	1		78	Rear, KDX, w/103" W.B.
15	5517 4546	1			RETAINER, Tailgate Opening
16	5502 0534-5	2			CLIP, Tailgate Retainer
17	5501 0734	2			RETAINER, Rear Corner Belt Rail
18	0154 628	8			SCREW, .164-18x.625
19	5501 5114	4			PIN
20		12			BOLT
	J400 7484				1994
	6035 024				1995
21	J012 0393	12			WASHER
22	J400 7487	17			SCREW
23	8350 4132	4			NUT, Acorn, (Use With Screw 4740356)
24	5501 6035	1			STRAP, Bow Tie Down
25-26	5501 8718-9	1			CAP, End
27	J096 8155	12			PLATE, Tapping

MODEL CODES:

72=2 DR Wagon
74=4 DR Wagon
77=Open Body 93" Whlbase
78=Open Body 103" Whlbase - Export
T=2WD
J,N=4WD
U=4WD (RHD)

BODY STYLES:

YJ=Wrangler (4X4) "S"
Weangler (4X4) SE
Wrangler (4X4) Sahara
Wrangler (4X4) Renegade
XJ=Cherokee SE
Cherokee Sport
Cherokee Country
ZJ=Grand Cherokee SE
Grand Cherokee Laredo
Grand Cherolee Limited
ZG=Grand Cherokee European
Y1=Wrangler
X1=Cherokee
Z1=Grand Cherokee
KDX=Vehicles

AR = Use as Required - = Non Illustrated Part P.A.R. = Paint as Required

« RETURN TO GROUP INDEX

SOFT TOP AND WINDOWS WITH HALF DOORS WRANGLER, YJ
Figure SYJ-1130

SYJ–1130

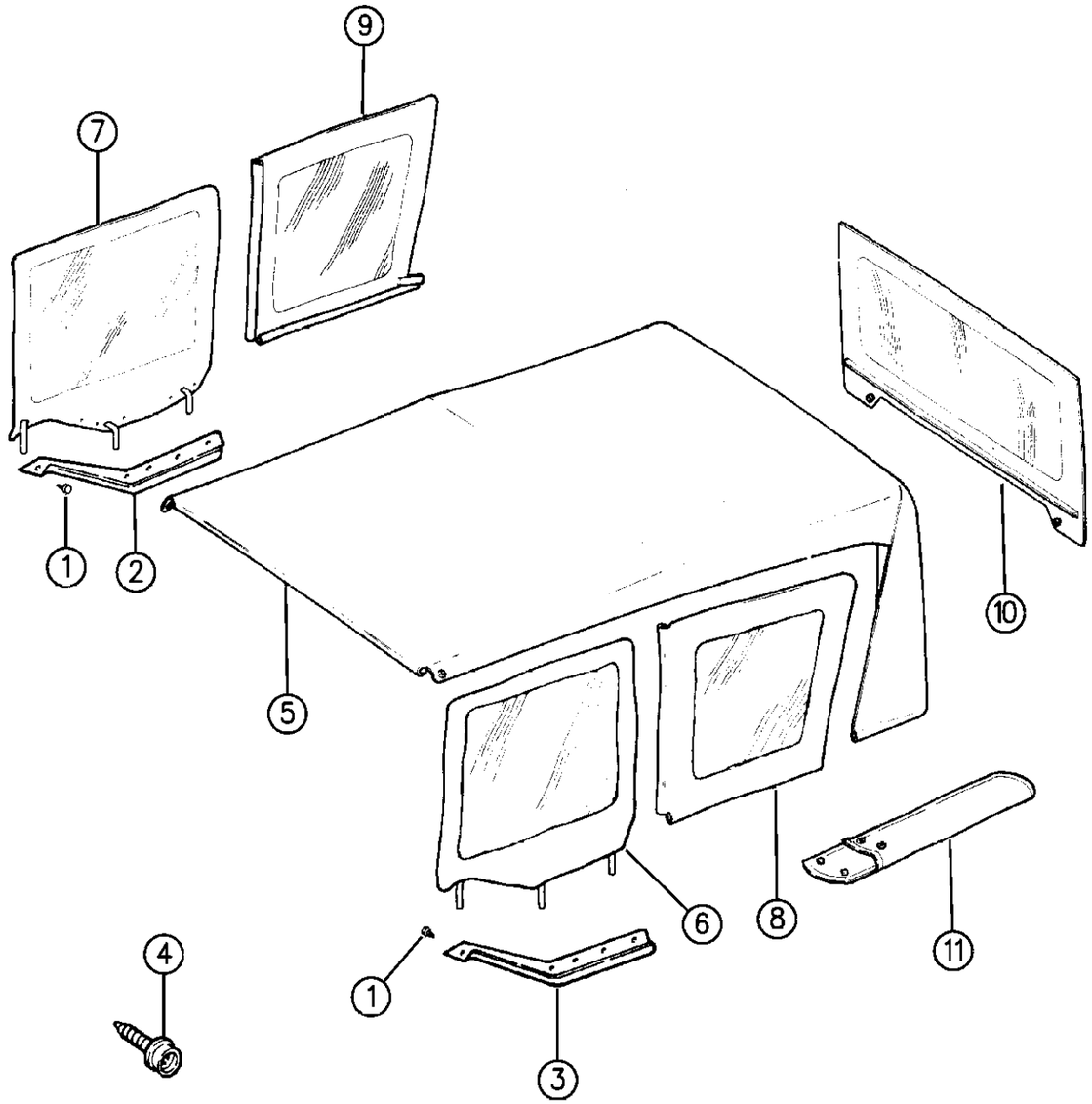

94J65 1130

ITEM	PART NUMBER	QTY	BODY	MODEL	DESCRIPTION
1	J400 7487	12			SCREW
2-3	5501 7744-5	1			RETAINER, Door
4	J400 7545	12			SCREW, Snap Head
	4778 470	1			SNAP KIT, (Contains 10 Male Snaps, 10 Sliders) ***
5		1			TOP, Soft
					1994
	5BN7 9KJ7			77	Khaki
	5BN7 9JX7			77	Black
	5BN7 9LTB			77	Spice
	5BN7 9KWC			77	White
					1995
	5EJ7 0PX7			77	Black
	5EJ7 0PTB			77	Spice
	5EJ7 0PWC			77	Frost White
	5FC4 7RW1			77	Stone White
6-7		1			DOOR, Upper Soft
					1994
	5BA10-1 KJ7				Khaki
	5BA10-1 JX7				Black
	5BA10-1 LTB				Spice
	5BA10-1 KWC				White
					1995
	5EK40-1 PX7				Black
	5EK40-1 PTB				Spice
	5EK4 0PWC				Blue/White, Right
	5EK4 1PWC				Blue/White, Left
	5EP8 2RW1				White, Right
	5EP8 3RW1				White, Left
8-9		1			GLASS, Quarter, Gray Tint
					1994
	5DF92-3 MJ7				Khaki
					1994-95
	5DF92-3 MX7				Black
	5DF92-3 MTB				Spice
	5DF92-3 MWC				Iris Blue White
	5DF92-3 RW1				White
10		1			GLASS, Tailgate, Tint
					1994
	5DL3 0MJ7				Khaki
					1994-95, Up to 7-24-95
	5DL3 0MX7				Black
	5DL3 0MTB				Spice

MODEL CODES:

72=2 DR Wagon
74=4 DR Wagon
77=Open Body 93" Whlbase
78=Open Body 103" Whlbase - Export
T=2WD
J,N=4WD
U=4WD (RHD)

BODY STYLES:

YJ=Wrangler (4X4) "S"
Weangler (4X4) SE
Wrangler (4X4) Sahara
Wrangler (4X4) Renegade
XJ=Cherokee SE
Cherokee Sport
Cherokee Country
ZJ=Grand Cherokee SE
Grand Cherokee Laredo
Grand Cherolee Limited
ZG=Grand Cherokee European
Y1=Wrangler
X1=Cherokee
Z1=Grand Cherokee
KDX=Vehicles

AR = Use as Required - = Non Illustrated Part P.A.R. = Paint as Required

SOFT TOP AND WINDOWS WITH HALF DOORS WRANGLER, YJ
Figure SYJ-1130

SYJ–1130

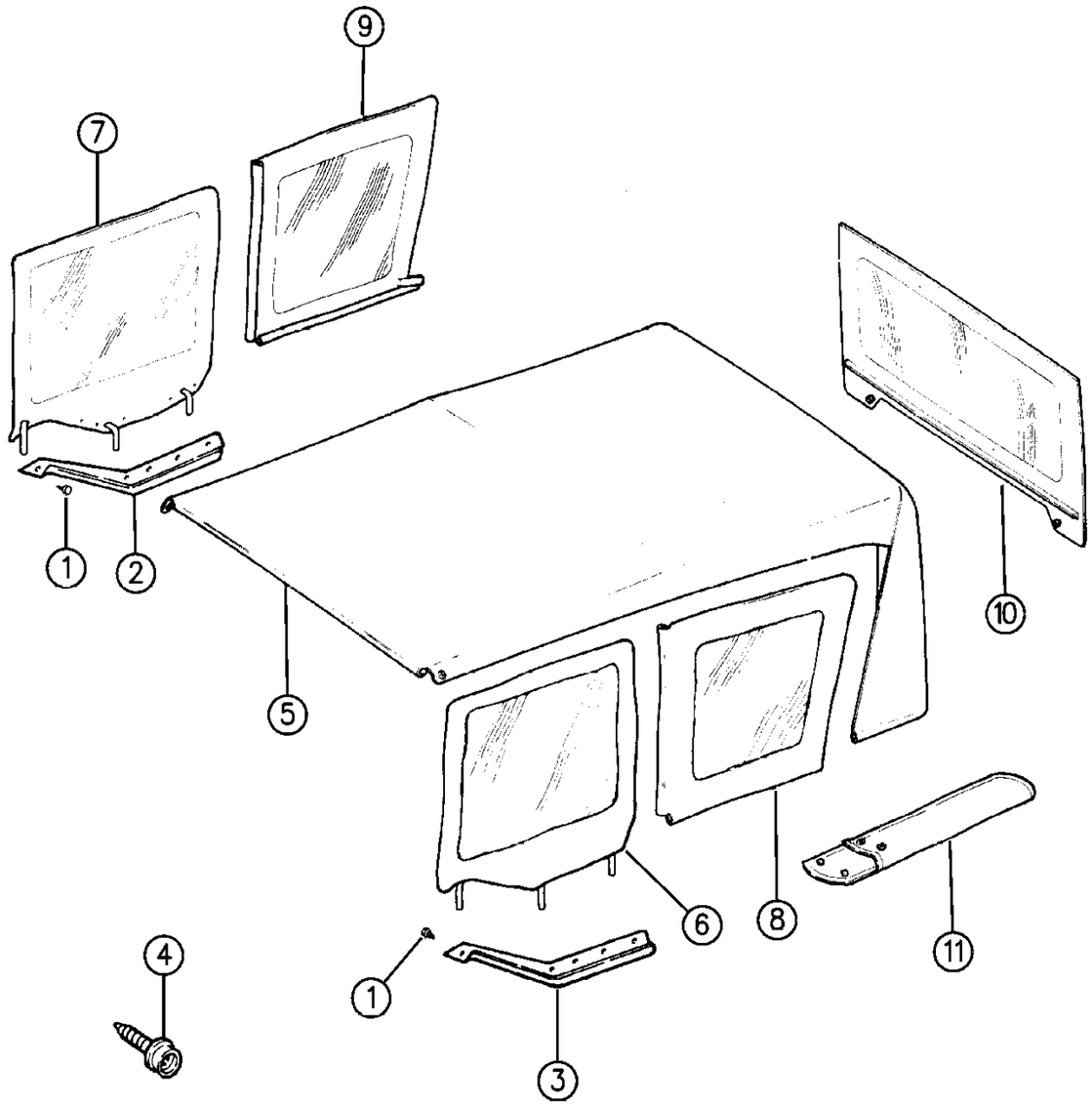

94J65 1130

ITEM	PART NUMBER	QTY	BODY	MODEL	DESCRIPTION
	5DL3 0MWC				Blue/White
					1995, After 7-24-95
	5FH5 9RX7			77	Black
	5FH5 9RWC			77	Blue/White
	5FH5 9RTB			77	Spice
	5FH5 9RW1			77	White
11	5AE8 2JX7	2			BAG, Window Stowage, Black

MODEL CODES:

72=2 DR Wagon
74=4 DR Wagon
77=Open Body 93" Whlbase
78=Open Body 103" Whlbase - Export
T=2WD
J,N=4WD
U=4WD (RHD)

BODY STYLES:

YJ=Wrangler (4X4) "S"
Weangler (4X4) SE
Wrangler (4X4) Sahara
Wrangler (4X4) Renegade
XJ=Cherokee SE
Cherokee Sport
Cherokee Country
ZJ=Grand Cherokee SE
Grand Cherokee Laredo
Grand Cherolee Limited
ZG=Grand Cherokee European
Y1=Wrangler
X1=Cherokee
Z1=Grand Cherokee
KDX=Vehicles

AR = Use as Required - = Non Illustrated Part P.A.R. = Paint as Required

SOFT TOP HARDWARE WITH FULL HARD DOORS WRANGLER, YJ
Figure SYJ-1140

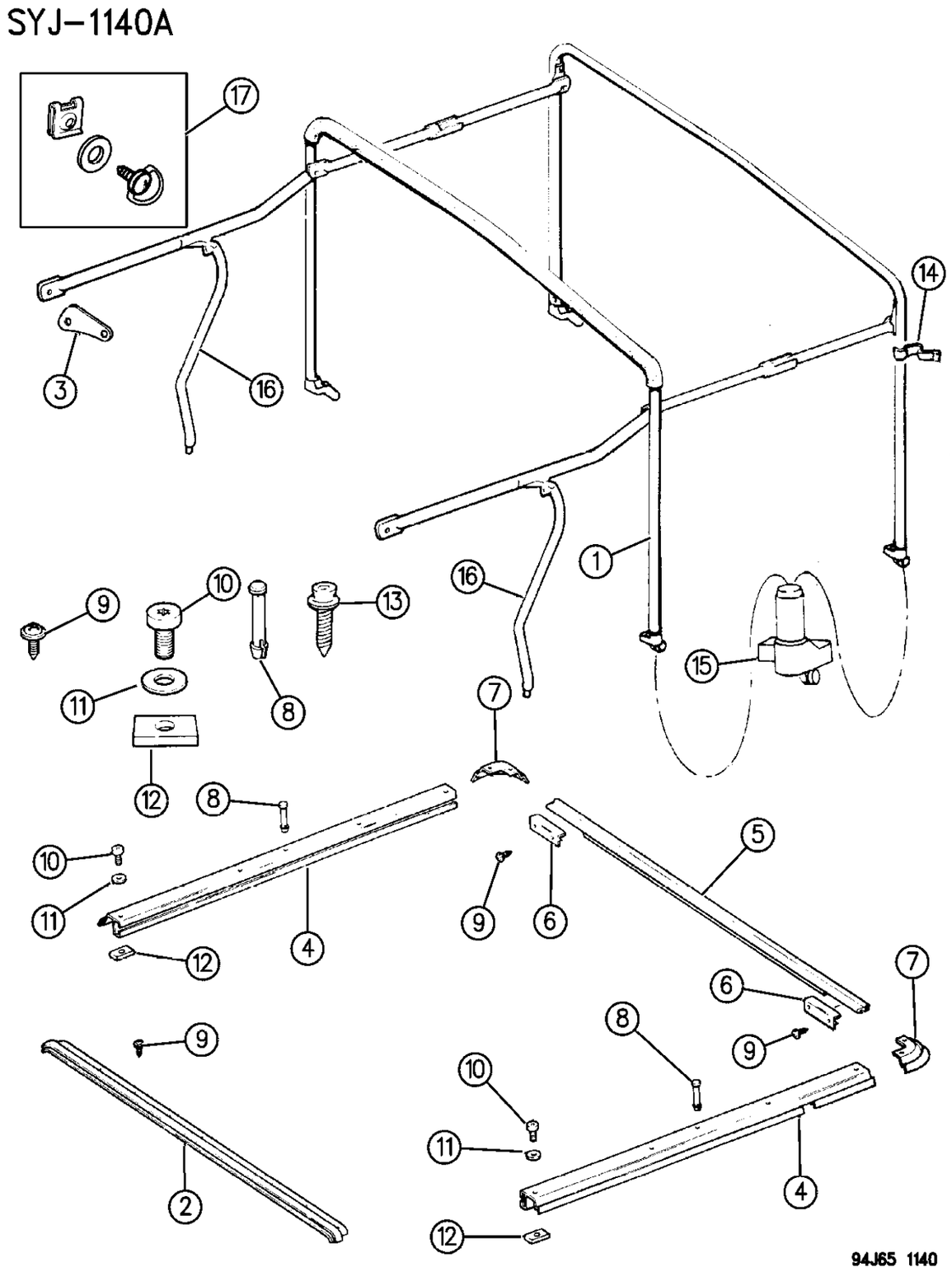

ITEM	PART NUMBER	QTY	BODY	MODEL	DESCRIPTION
1	5252 835	1			BOW AND DOOR FRAME ASSEMBLY, (Does not include the vertile door supports, item 16) ***
2					RETAINER, Windshield
	8220 0921	1			1994
	5517 6350	1			1995
3	8350 5014-5	1			BRACKET, Windshield
4					RETAINER, Side Belt Rail
	8350 5018	1			Right
	8350 5017	1			Left
5	5517 4546	1			RETAINER, Tailgate Opening
6	5502 0534-5	1			CLIP, Tailgate Retainer
7	5501 0734	2			RETAINER, Rear Corner Belt Rail
8	5501 5114	4			PIN
9	J400 7487	15			SCREW, .38" Long ***
	J400 3671	15			SCREW, .625" Long ***
10	J400 7484	12			BOLT
11	J012 0393	12			WASHER
12	J096 8155	12			PLATE, Tapping
13	J400 7545	2			SCREW, Snap Head
14	5501 6035	1			STRAP, Bow Tie Down
15					SLIDE, included in bow and door frame assy.
16	5252 355	1			SUPPORT
17	4773 633	1			SCREW PACKAGE, Attach Windshield Bracket To Support ***

MODEL CODES:

72=2 DR Wagon
74=4 DR Wagon
77=Open Body 93" Whlbase
78=Open Body 103" Whlbase - Export
T=2WD
J,N=4WD
U=4WD (RHD)

BODY STYLES:

YJ=Wrangler (4X4) "S"
Weangler (4X4) SE
Wrangler (4X4) Sahara
Wrangler (4X4) Renegade
XJ=Cherokee SE
Cherokee Sport
Cherokee Country
ZJ=Grand Cherokee SE
Grand Cherokee Laredo
Grand Cherolee Limited
ZG=Grand Cherokee European
Y1=Wrangler
X1=Cherokee
Z1=Grand Cherokee
KDX=Vehicles

AR = Use as Required - = Non Illustrated Part P.A.R. = Paint as Required

« RETURN TO GROUP INDEX

SOFT TOP AND WINDOWS WITH FULL HARD DOORS WRANGLER, YJ
Figure SYJ-1150

SYJ–1150

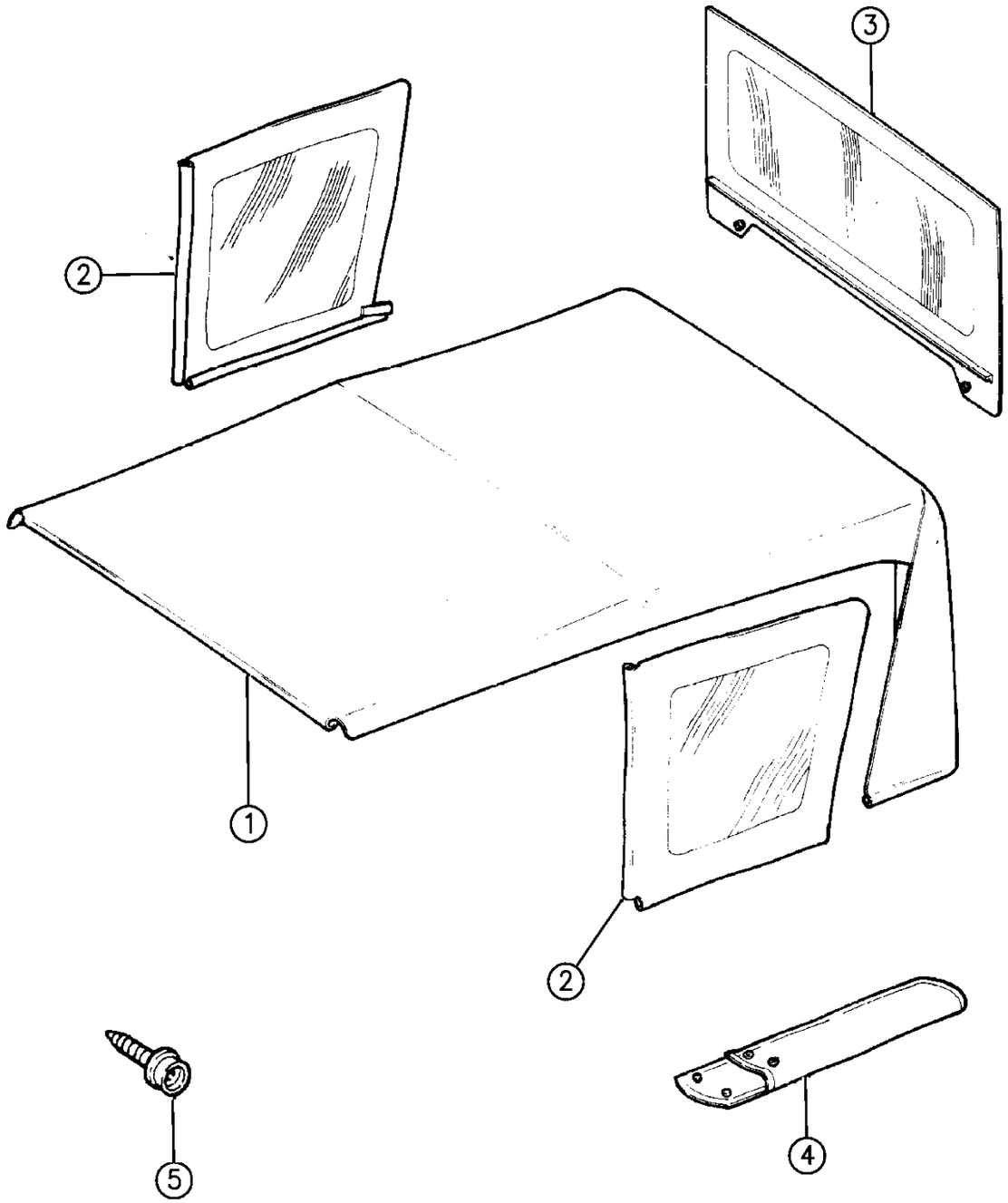

ITEM	PART NUMBER	QTY	BODY	MODEL	DESCRIPTION
1					TOP, Soft
	8350 5031	1			Black Denim
	4637 404	1			Khaki
	4740 360	1			Spice
	4637 403	1			Frost White
2					WINDOW, Quarter ***
	8350 5034-5	1			Black Denim
	4637 410-1	1			Khaki
	4740 358-9	1			Spice
	4637 408-9	1			Frost White
3					WINDOW, Tailgate ***
	5AF7 7JX7	1			Black
	4637 374	1			Khaki
	4740 357	1			Spice
	4637 372	1			Frost White
4					BAG, Window Stowage
	5AE8 2JX7	2			Black
	5AE8 2JJ5	2			Khaki
5	J400 7545	2			SCREW, Snap Head
	4778 470	1			SNAP KIT, (Contains 10 Male Snaps, 10 Sliders) ***

MODEL CODES:

72=2 DR Wagon
74=4 DR Wagon
77=Open Body 93" Whlbase
78=Open Body 103" Whlbase - Export
T=2WD
J,N=4WD
U=4WD (RHD)

BODY STYLES:

YJ=Wrangler (4X4) "S"
Weangler (4X4) SE
Wrangler (4X4) Sahara
Wrangler (4X4) Renegade
XJ=Cherokee SE
Cherokee Sport
Cherokee Country
ZJ=Grand Cherokee SE
Grand Cherokee Laredo
Grand Cherolee Limited
ZG=Grand Cherokee European
Y1=Wrangler
X1=Cherokee
Z1=Grand Cherokee
KDX=Vehicles

AR = Use as Required - = Non Illustrated Part P.A.R. = Paint as Required

« RETURN TO GROUP INDEX

SOFT TOP, AND WINDOWS EUROPE, KDX, Y1
Figure SYJ-1160

SYJ-1160

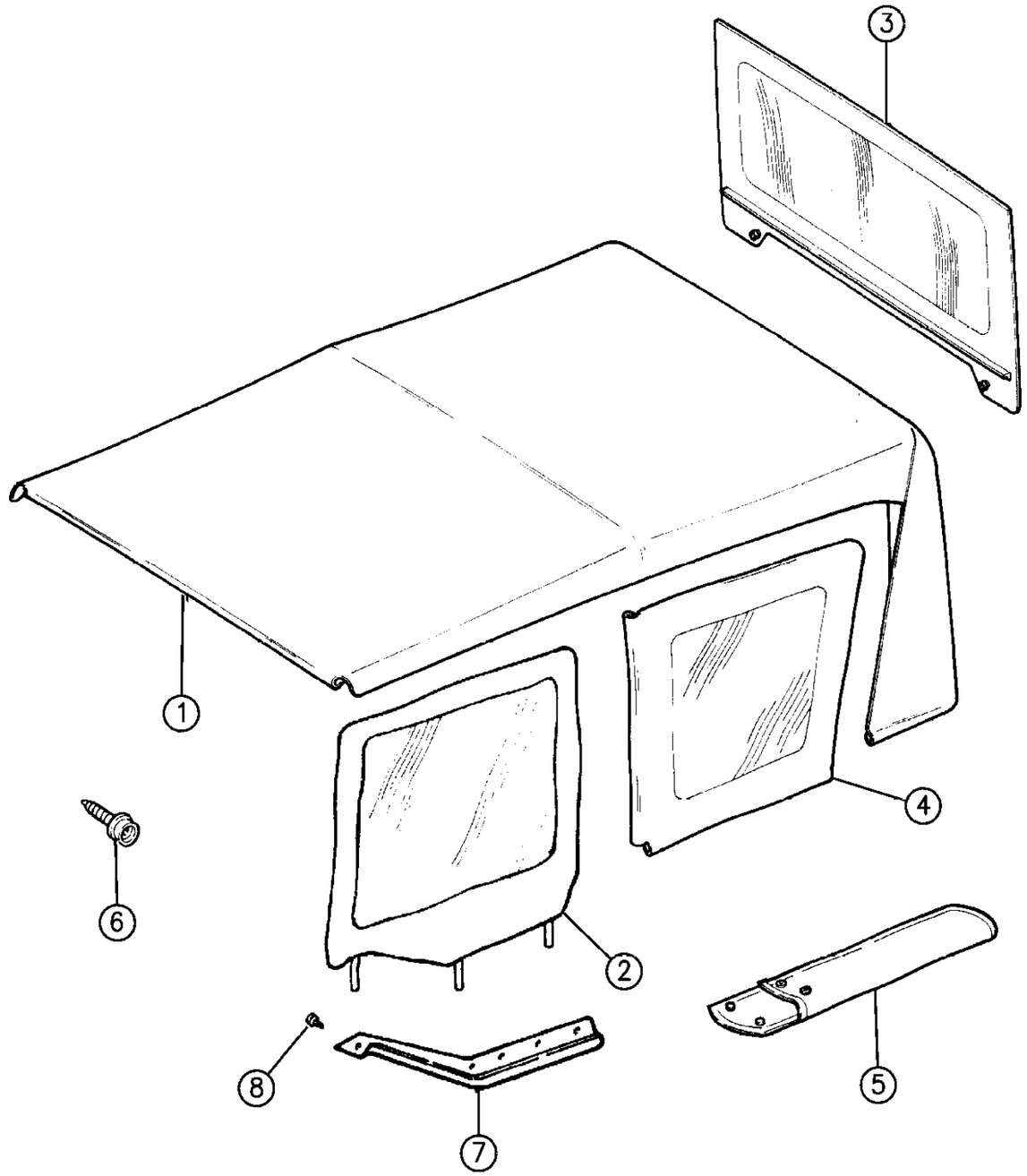

ITEM	PART NUMBER	QTY	BODY	MODEL	DESCRIPTION
1		1			TOP, Soft
					1994
	5BN7 9KJ7			77	Khaki
					1994-95
	5BN7 9JX7			77	Black
	5BN7 9LTB			77	Spice
	5BN7 9KWC			77	White
					1994
	5CK1 0KJ7			78	Khaki, KDX
					1994-95
	5CK1 0KX7			78	Black, KDX
	5CK1 0LTB			78	Spice, KDX
	5CK1 0KWC			78	White, KDX
2		1			DOOR, Upper Soft
					1994
	5BA10-1 KJ7				Khaki
					1994-95
	5BA10-1 JX7				Black
	5BA10-1 LTB				Spice
	5BA10-1 KWC				White
3		1			GLASS, Tailgate
					1994
	5DL3 0MJ7			77	Khaki
					1994-95
	5DL3 0MX7			77	Black
	5DL3 0MTB			77	Spice
	5DL3 0MWC			77	White
					1994
	5CK1 3KJ7			78	Khaki, KDX
					1994-95
	5CK1 3KX7			78	Black, KDX
	5CK1 3LTB			78	Spice, KDX
	5CK1 3KWC			78	Iris Blue White, KDX
	5CK1 3RW1			78	White, 1995, KDX
4		1			GLASS, Quarter
					1994
	5AF78-9 KJ7				Khaki
					1994-95
	5AF78-9 JX7			77	Black
	5AF78-9 LTB			77	Spice
	5AF78-9 KWC			77	White
					1994

MODEL CODES:

72=2 DR Wagon
74=4 DR Wagon
77=Open Body 93" Whlbase
78=Open Body 103" Whlbase - Export
T=2WD
J,N=4WD
U=4WD (RHD)

BODY STYLES:

YJ=Wrangler (4X4) "S"
Weangler (4X4) SE
Wrangler (4X4) Sahara
Wrangler (4X4) Renegade

XJ=Cherokee SE
Cherokee Sport
Cherokee Country

ZJ=Grand Cherokee SE
Grand Cherokee Laredo
Grand Cherolee Limited
ZG=Grand Cherokee European

Y1=Wrangler
X1=Cherokee
Z1=Grand Cherokee
KDX=Vehicles

AR = Use as Required - = Non Illustrated Part P.A.R. = Paint as Required

SOFT TOP, AND WINDOWS EUROPE, KDX, Y1
Figure SYJ-1160

SYJ–1160

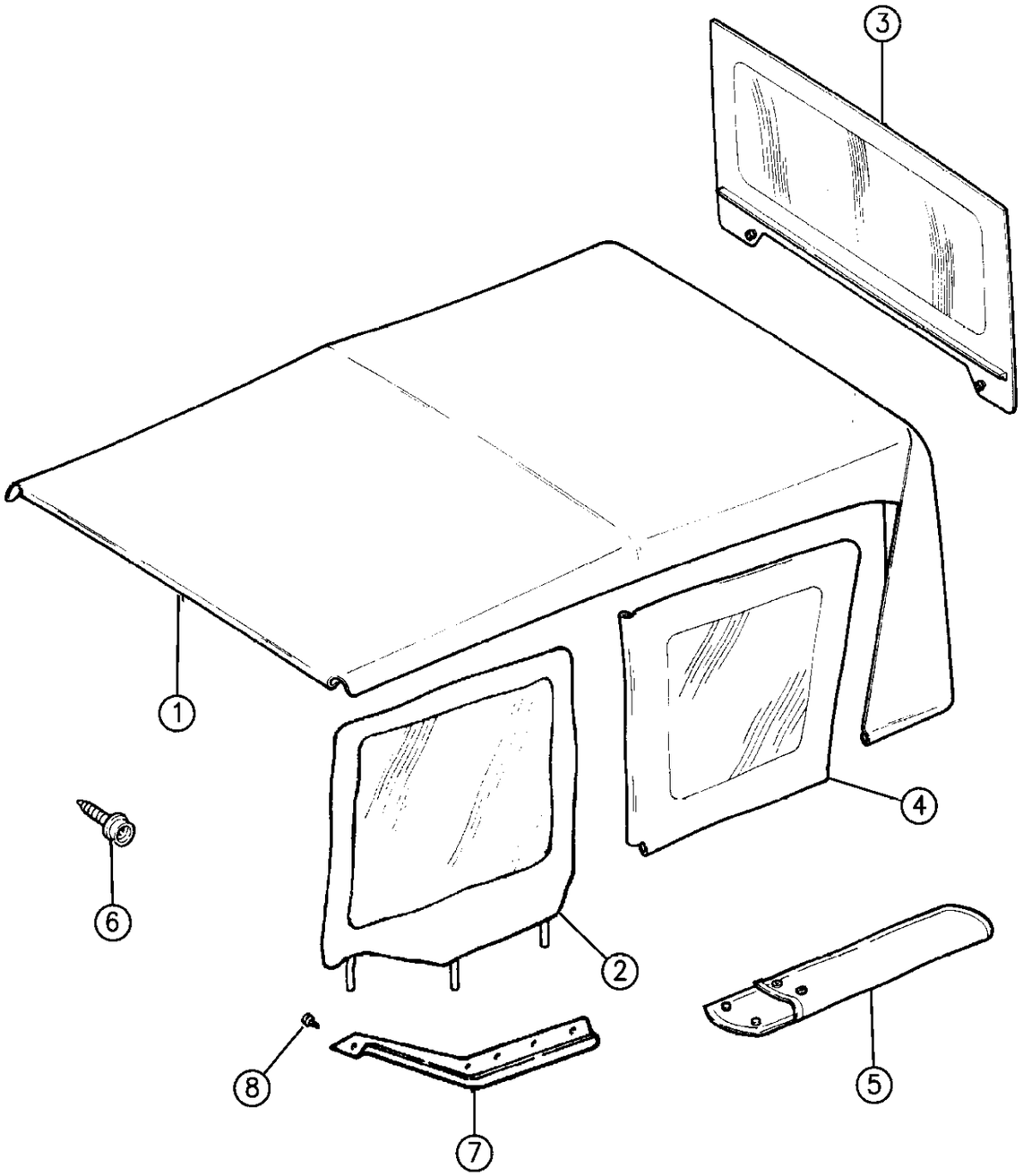

ITEM	PART NUMBER	QTY	BODY	MODEL	DESCRIPTION
	5CK78-9 KJ7				Khaki
					1994-95
	5CK78-9 KX7			78	Black, KDX
	5CK78-9 LTB			78	Spice, KDX
	5CK78-9 KWC			78	Iris Blue White, KDX
	5CK78-9 RW1			78	White, 1995, KDX
5	5AE8 2JX7	2			BAG, Window Stowage, Black
6	J400 7545	12			SCREW, Snap Head
	4778 470	1			SNAP KIT, (Includes 10 Male Snaps & 10 Sliders) ***
7	5501 7744-5	1			RETAINER, Door
8	J400 7487	12			SCREW

MODEL CODES:

72=2 DR Wagon
74=4 DR Wagon
77=Open Body 93" Whlbase
78=Open Body 103" Whlbase - Export
T=2WD
J,N=4WD
U=4WD (RHD)

BODY STYLES:

YJ=Wrangler (4X4) "S"
Weangler (4X4) SE
Wrangler (4X4) Sahara
Wrangler (4X4) Renegade
XJ=Cherokee SE
Cherokee Sport
Cherokee Country
ZJ=Grand Cherokee SE
Grand Cherokee Laredo
Grand Cherolee Limited
ZG=Grand Cherokee European
Y1=Wrangler
X1=Cherokee
Z1=Grand Cherokee
KDX=Vehicles

AR = Use as Required - = Non Illustrated Part P.A.R. = Paint as Required

TAILGATE WRANGLER, YJ
Figure SYJ-1310

SYJ-1310

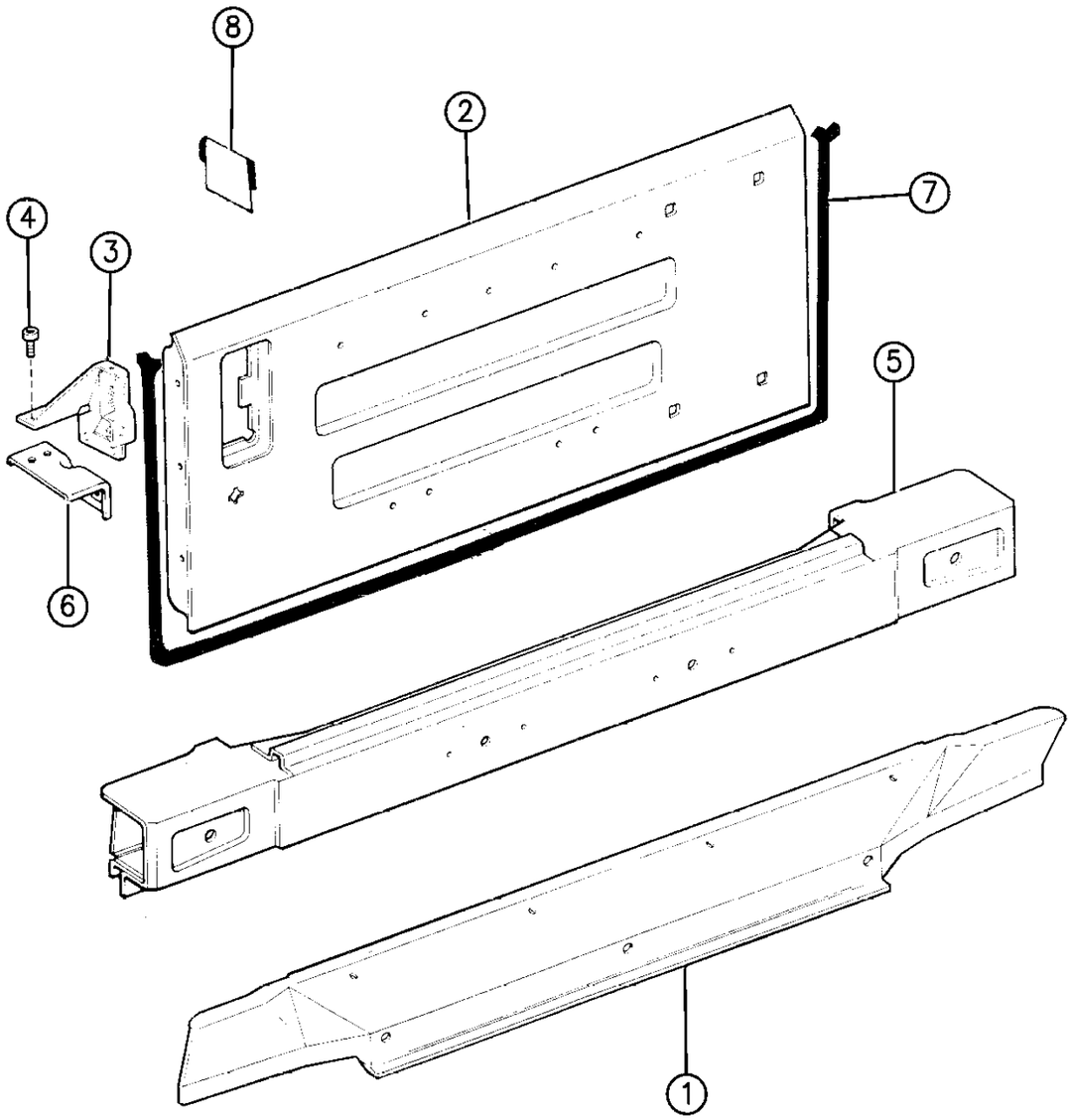

94J65 1310

ITEM	PART NUMBER	QTY	BODY	MODEL	DESCRIPTION
1					PANEL
	J546 0669	1			1994-95, Up to 2-20-95
	5517 5790	1			1995, After 2-20-95
2	5534 5787	1			TAILGATE
3	5501 5904	1			BRACKET
-	J400 6303	2			RIVET
4	J400 7536	10			SCREW
5					PANEL, Lower
	5505 0024	1			1994-95, Up to 2-13-95
	5517 5788	1			1995, After 2-13-95
6	5517 4770	1			REINFORCEMENT
7					WEATHERSTRIP
	5500 9742	1			1994
	5517 5043	1			1995
8	5502 5280	1			WATERSHIELD, Latch ***

MODEL CODES:

72=2 DR Wagon
74=4 DR Wagon
77=Open Body 93" Whlbase
78=Open Body 103" Whlbase - Export
T=2WD
J,N=4WD
U=4WD (RHD)

BODY STYLES:

YJ=Wrangler (4X4) "S"
Weangler (4X4) SE
Wrangler (4X4) Sahara
Wrangler (4X4) Renegade
XJ=Cherokee SE
Cherokee Sport
Cherokee Country
ZJ=Grand Cherokee SE
Grand Cherokee Laredo
Grand Cherolee Limited
ZG=Grand Cherokee European
Y1=Wrangler
X1=Cherokee
Z1=Grand Cherokee
KDX=Vehicles

AR = Use as Required - = Non Illustrated Part P.A.R. = Paint as Required

« RETURN TO GROUP INDEX

HINGES, TAILGATE WRANGLER, YJ
Figure SYJ-1320

SYJ–1320

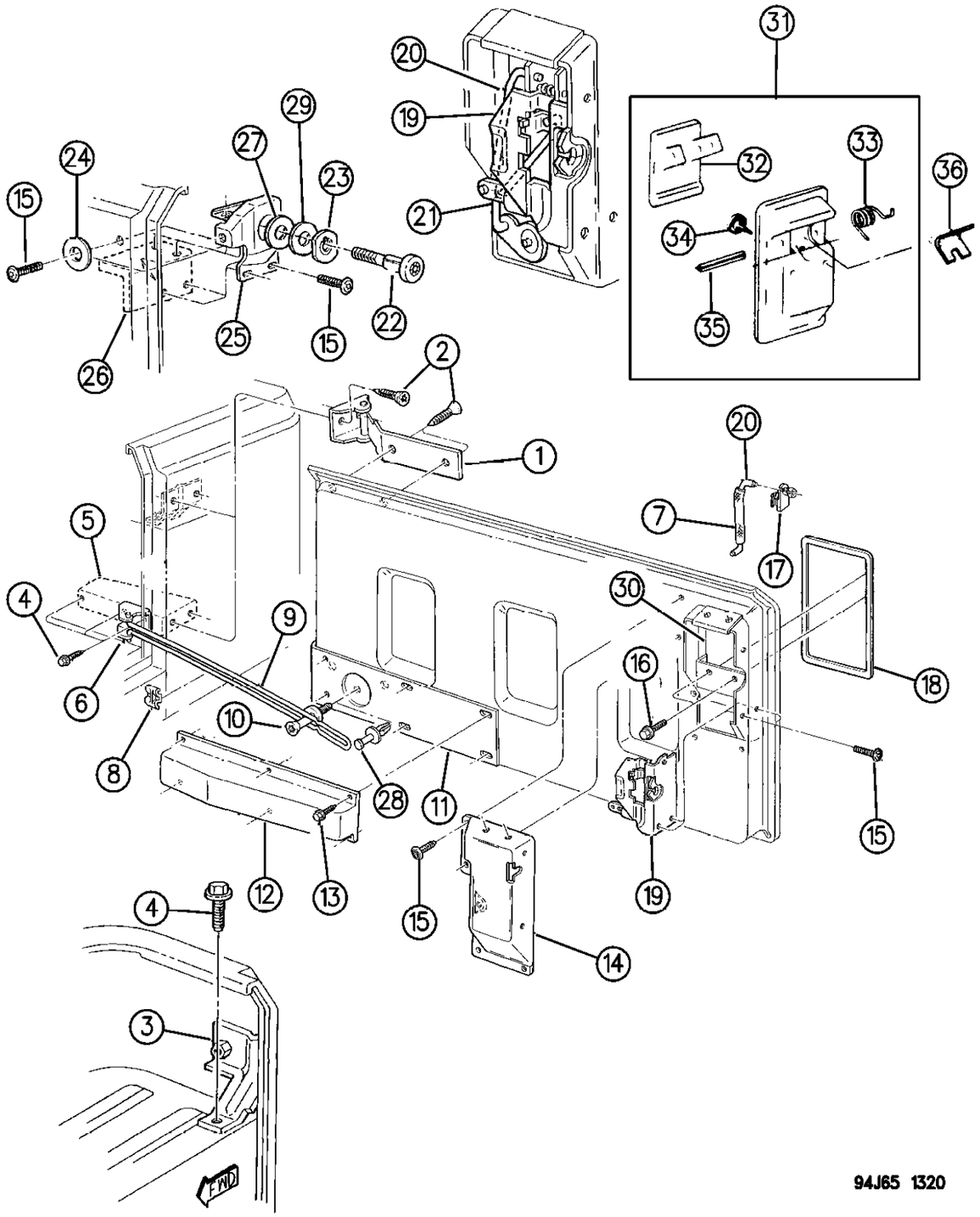

ITEM	PART NUMBER	QTY	BODY	MODEL	DESCRIPTION
1					HINGE, Tailgate
	5507 5616	2			
	5507 5641	2			w/Pintle Hook, (EUROPE, MIDEAST, KDX)
2	J400 4956	8			SCREW, .312-18x.800
3	5500 8262	1			REINFORCEMENT, Taigate Hinge Upper on Body
4	J400 4455	AR			SCREW
5	5500 9132	1			REINFORCEMENT, Tailgate Hinge Lower
6	5500 9448	1			BRACKET, Check Rod to Body, (Renegade or KDX)
7		1			SLEEVE, Handle to Latch Rod, Not Serviced
8	5500 9440	1			CLAMP, Check Rod Spacer, (Renegade or KDX)
9	5507 4905	1			ROD, Tailgate Check, (Renegade or KDX)
10	5500 9447	1			PIN, Check Rod Slide, (Renegade or KDX)
11	5500 9445	1			SHIELD, Tailgate Check Rod
12	5500 9444	1			COVER, Check Rod
13		6			SCREW, .190-16x.88, Not Serviced
14	5501 5300	1			COVER, Tailgate Latch Trim
15	J400 7536	AR			SCREW
16	6034 980	2			SCREW
17	J400 4532	1			RETAINER, Rod
18	J374 3608	1			SEAL, Door Handle
19	5507 4947	1			LATCH, Tailgate
20	5500 8127	1			ROD, Tailgate Latch to Handle
21		1			ROD, Latch to Lock Cylinder
	5502 6849				1994
	5507 6011				1995
22		1			STRIKER, Door Latch For Tailgate
	J575 8191				1994
	5507 6217				1995
23		1			PLATE, Striker Mounting
	5502 4905				1994
	5507 4800				1995
24		1			WASHER, Flat, Not Serviced
25		1			BRACKET, Tailgate Striker Mounting
	5501 5904				
	5501 8540				BRACKET ASSEMBLY, KDX, w/Soft Top, Swing Away w/o Pintle 15" Tire ***
	5501 8541				BRACKET, KDX, (Contained in 55018540)
	5501 8542				REINFORCEMENT, KDX, (Contained in 55018540)
26		1			BRACKET, Not Serviced, See Panel 65-810
27	S012 0390	1			WASHER, Flat
28	5507 4801	1			PLUG
29	5503 3620	1			WASHER, Flat

MODEL CODES:

72=2 DR Wagon
74=4 DR Wagon
77=Open Body 93" Whlbase
78=Open Body 103" Whlbase - Export
T=2WD
J,N=4WD
U=4WD (RHD)

BODY STYLES:

YJ=Wrangler (4X4) "S"
Weangler (4X4) SE
Wrangler (4X4) Sahara
Wrangler (4X4) Renegade
XJ=Cherokee SE
Cherokee Sport
Cherokee Country
ZJ=Grand Cherokee SE
Grand Cherokee Laredo
Grand Cherolee Limited
ZG=Grand Cherokee European
Y1=Wrangler
X1=Cherokee
Z1=Grand Cherokee
KDX=Vehicles

AR = Use as Required - = Non Illustrated Part P.A.R. = Paint as Required

HINGES, TAILGATE WRANGLER, YJ
Figure SYJ-1320

SYJ–1320

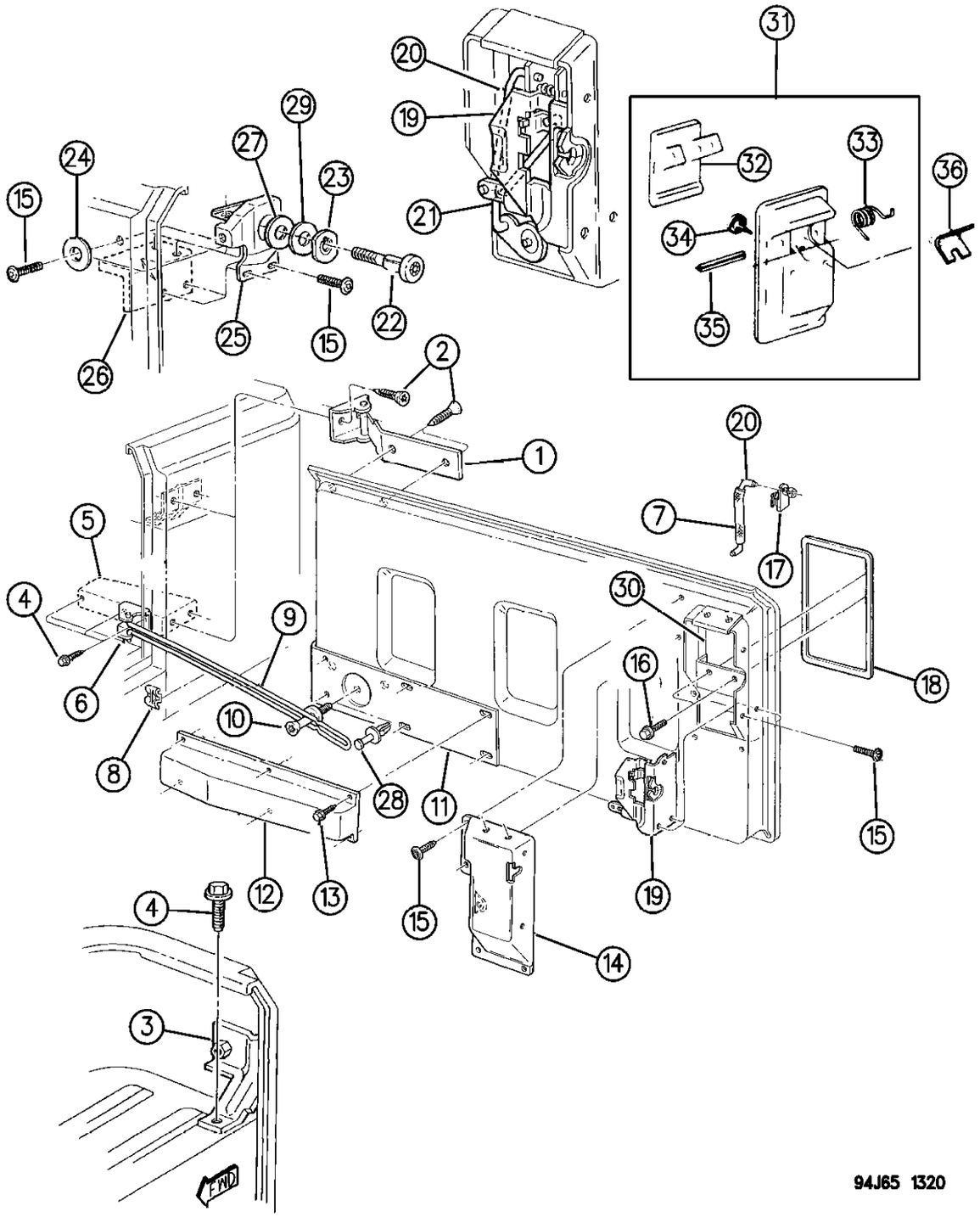

ITEM	PART NUMBER	QTY	BODY	MODEL	DESCRIPTION
30	5500 8273	1			BRACKET, Tailgate Latch Mounting
31		1			HANDLE ASSY., Tailgate ***
	5500 8895				1994
	5507 5882				1995
32		1			HANDLE
	5500 8902				1994
	5507 5881				1995
33	J363 1218	1			SPRING, Return
34	J400 3110	1			BUMPER, Door Handle
35		1			PIN, Spring, Not Serviced
36	5502 0076	1			SEAL
	6031 044	1			CAP, T/Gate Outer

MODEL CODES:

72=2 DR Wagon
74=4 DR Wagon
77=Open Body 93" Whlbase
78=Open Body 103" Whlbase - Export
T=2WD
J,N=4WD
U=4WD (RHD)

BODY STYLES:

YJ=Wrangler (4X4) "S"
Weangler (4X4) SE
Wrangler (4X4) Sahara
Wrangler (4X4) Renegade
XJ=Cherokee SE
Cherokee Sport
Cherokee Country
ZJ=Grand Cherokee SE
Grand Cherokee Laredo
Grand Cherolee Limited
ZG=Grand Cherokee European
Y1=Wrangler
X1=Cherokee
Z1=Grand Cherokee
KDX=Vehicles

AR = Use as Required - = Non Illustrated Part P.A.R. = Paint as Required

ADD-A-TRUNK WRANGLER YJ
Figure SYJ-1330

SYJ–1330

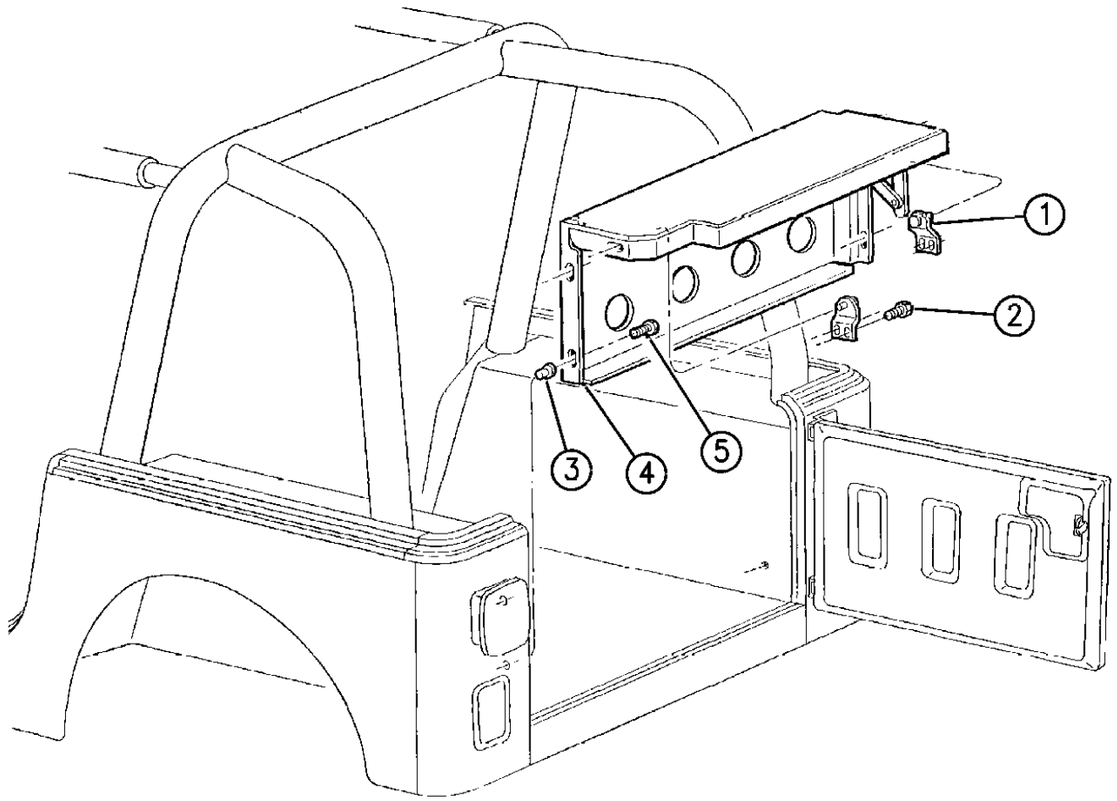

94J65 1330

ITEM	PART NUMBER	QTY	BODY	MODEL	DESCRIPTION
1	5521 5680	2			LATCH
2	0153 856	4			SCREW, .190-16x.625
3	6502 751	4			REV-NUT ***
4	5521 5678	1			PANEL
5	5521 5679	4			SCREW

MODEL CODES:

72=2 DR Wagon
74=4 DR Wagon
77=Open Body 93" Whlbase
78=Open Body 103" Whlbase - Export
T=2WD
J,N=4WD
U=4WD (RHD)

BODY STYLES:

YJ=Wrangler (4X4) "S"
Weangler (4X4) SE
Wrangler (4X4) Sahara
Wrangler (4X4) Renegade

XJ=Cherokee SE
Cherokee Sport
Cherokee Country

ZJ=Grand Cherokee SE
Grand Cherokee Laredo
Grand Cherolee Limited
ZG=Grand Cherokee European

Y1=Wrangler
X1=Cherokee
Z1=Grand Cherokee
KDX=Vehicles

AR = Use as Required - = Non Illustrated Part P.A.R. = Paint as Required

« RETURN TO GROUP INDEX

SPORT BAR WRANGLER, YJ
Figure SYJ-1610

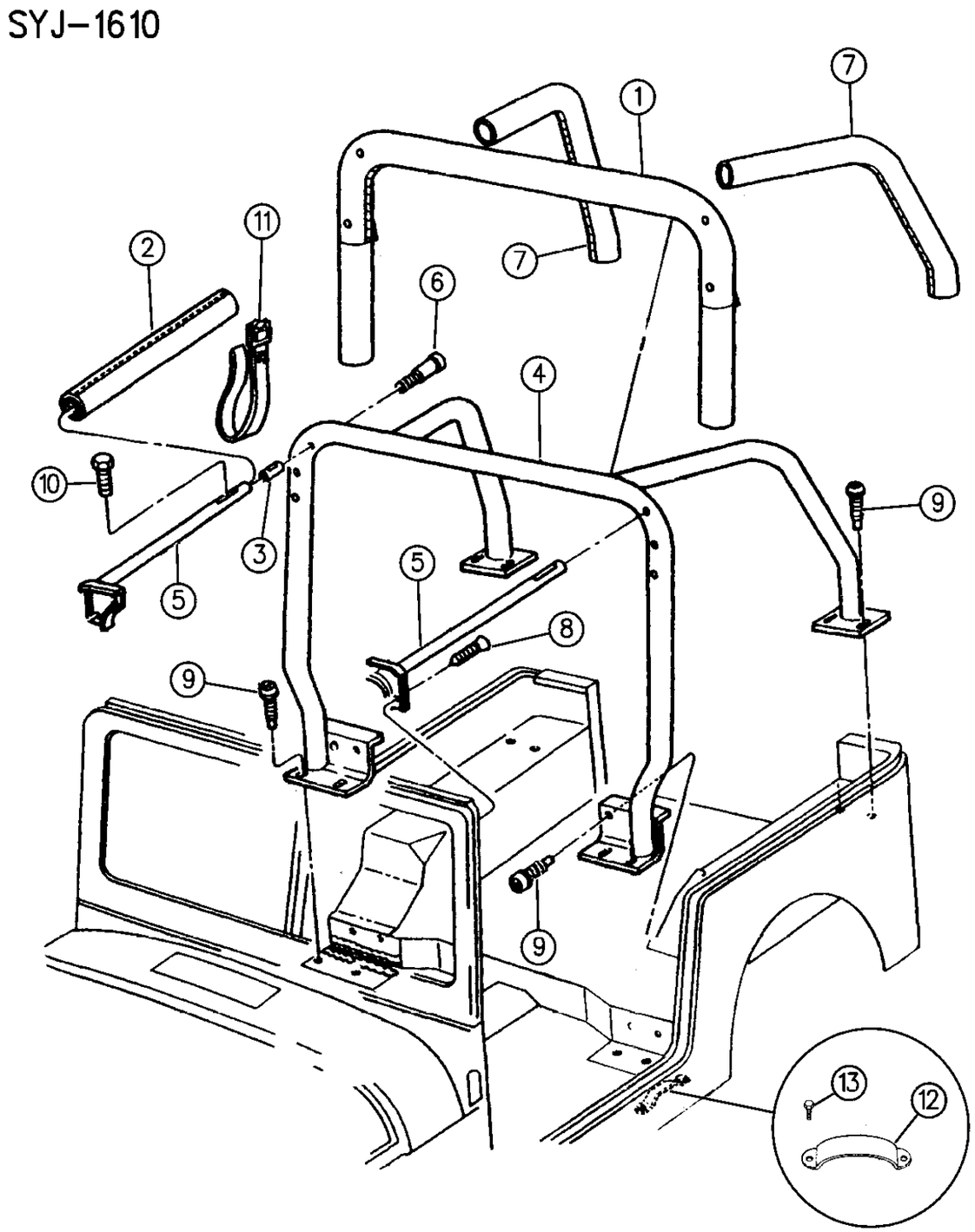

ITEM	PART NUMBER	QTY	BODY	MODEL	DESCRIPTION
1					PAD ASSEMBLY, Sport Bar Center ***
	5CE4 0LX7	1			Black
	5CE4 0LTB	1			Spice
	5CE4 1LX7	1			Black, EUROPE
	5CE4 1LTB	1			Spice, EUROPE
NOTE: Pad must be modified for use w/speakers. e Adhesive #312.					
2					COVER ASSEMBLY, Side Bar ***
	5AE9 9KX7	2			Black, w/o Speaker
	5BJ2 3KX7	2			Black w/Speakers
	5AE9 9LTB	2			Spice, w/o Speakers
	5BJ2 3LTB	2			Spice, w/Speakers
3	5501 6410-1	1			ADAPTER ASSEMBLY, Side Bar to Sport Bar ***
4					BAR ASSEMBLY, Sport ***
	5534 6189	1			Except Europe
	5534 6198	1			EUROPE
	5517 4774	1		77	KDX, Export
	5517 4776	1		78	KDX, Export
5	5517 4746-7	1			SIDE BAR ASSEMBLY, Windshield to Sport Bar ***
6	J400 7446	2			BOLT, Side Bar to Sport Bar
7					PAD ASSEMBLY, Sport Bar Rear ***
	5CE64-5 LX7	1			Black
	5CE64-5 LTB	1			Spice
8	6035 162	2			SCREW, .312-18x1.00
9	6034 359	12			SCREW, Sport Bar to Floor
10	6035 336	2			BOLT, Side Bar Mounting
11	5501 5916	4			STRAP, Side Bar Stowage
12	5501 3668	4			FOOTMAN LOOP, Side Rail Stowage ***
13	0154 605	8			BOLT, Footman Loop

MODEL CODES:

72=2 DR Wagon
74=4 DR Wagon
77=Open Body 93" Whlbase
78=Open Body 103" Whlbase - Export
T=2WD
J,N=4WD
U=4WD (RHD)

BODY STYLES:

YJ=Wrangler (4X4) "S"
Weangler (4X4) SE
Wrangler (4X4) Sahara
Wrangler (4X4) Renegade
XJ=Cherokee SE
Cherokee Sport
Cherokee Country
ZJ=Grand Cherokee SE
Grand Cherokee Laredo
Grand Cherolee Limited
ZG=Grand Cherokee European
Y1=Wrangler
X1=Cherokee
Z1=Grand Cherokee
KDX=Vehicles

AR = Use as Required - = Non Illustrated Part P.A.R. = Paint as Required

« RETURN TO GROUP INDEX

SAGIPARTS

GROUP-SXJ

BODY SHEET METAL, GLASS EXCEPT DOORS

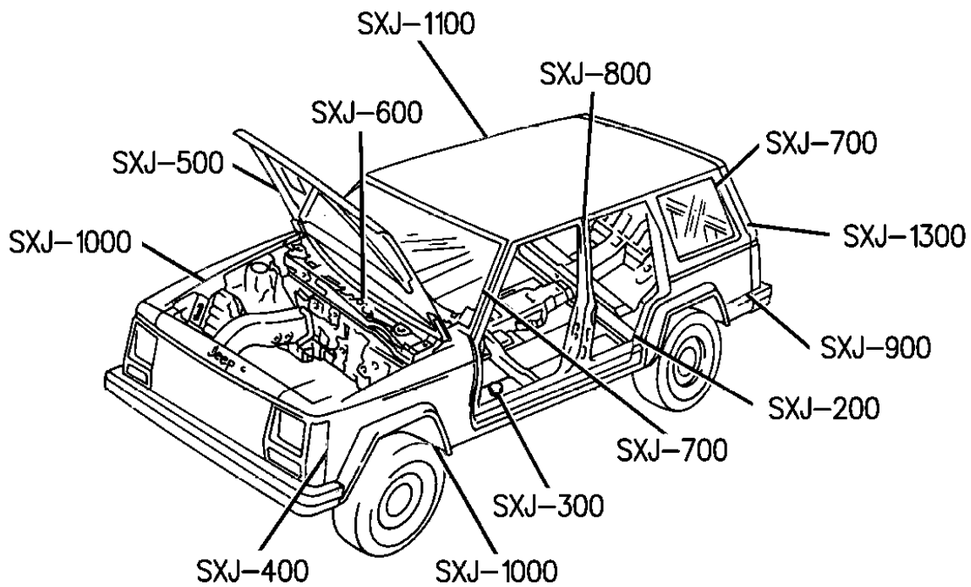

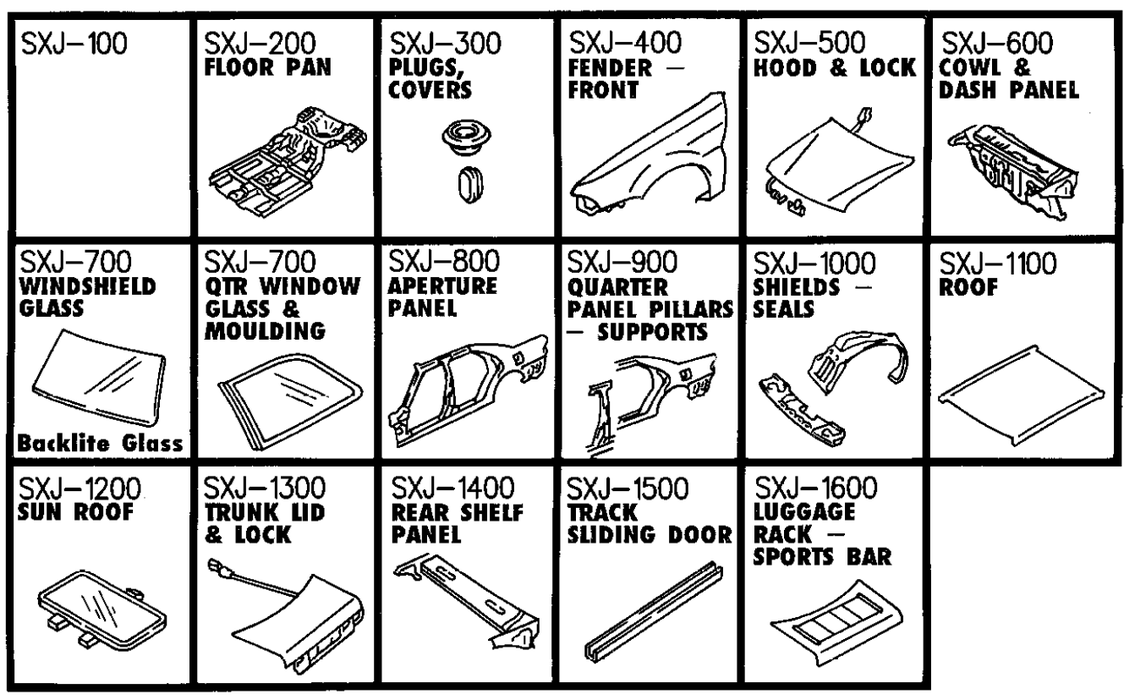

GROUP SXJ - SHEET METAL - BODY CHEROKEE

ILLUSTRATION TITLE	GROUP-FIG. NO.
FLOOR PAN	
PANS, FLOOR CHEROKEE XJ	Fig. SXJ-220
PLATES, UNDERBODY SKID CHEROKEE XJ	Fig. SXJ-230
PANELS, LOAD BARRIER AND AUXILIARY FLOOR CHEROKEE 2 DOOR, FRENCH COMMERCIAL PACKAGE XJ	Fig. SXJ-240
PLUGS	
PLUGS CHEROKEE XJ	Fig. SXJ-310
PANELS, FRONT END INNER AND WHEELHOUSE CHEROKEE XJ	Fig. SXJ-430
FENDERS, FRONT CHEROKEE XJ	Fig. SXJ-440
HOOD & HOOD RELEASE	
HOOD, LATCH AND HINGES CHEROKEE XJ	Fig. SXJ-520
COWL AND DASH PANEL	
PANELS, COWL AND DASH CHEROKEE XJ	Fig. SXJ-620
COWL AND DASH PANEL R.H.D. XJ	Fig. SXJ-630
GLASS AND MIRRORS	
GLASS, WINDSHIELD, BACKLITE AND MIRROR CHEROKEE XJ	Fig. SXJ-750
WINDOWS, QUARTER 2 AND 4 DOOR CHEROKEE XJ	Fig. SXJ-760
APPERTURE PANELS	
PANELS, BODY SIDE CHEROKEE XJ, 2 DOOR	Fig. SXJ-820
PANELS, BODY SIDE CHEROKEE, XJ, 4 DOOR	Fig. SXJ-830
QUARTER PANELS, PILLAR AND SUPPORTS	
PANELS, REAR QUARTER CHEROKEE XJ, 2 DOOR	Fig. SXJ-920
FUEL FILLER HOUSING & DOOR CHEROKEE XJ	Fig. SXJ-930
PANELS, REAR QUARTER CHEROKEE, 4 DOOR, XJ	Fig. SXJ-940
APPLIQUES, REAR QUARTER PANEL CHEROKEE XJ	Fig. SXJ-950
ROOF PANELS AND TOPS	
ROOF PANEL CHEROKEE XJ	Fig. SXJ-1175
TAILGATE AND LIFT DOOR	
LIFT DOOR, LATCH AND HINGES CHEROKEE XJ	Fig. SXJ-1340
LUGGAGE RACK	
RACK, ROOF LUGGAGE CHEROKEE, XJ	Fig. SXJ-1620

PANS, FLOOR CHEROKEE XJ
Figure SXJ-220

SXJ-220B

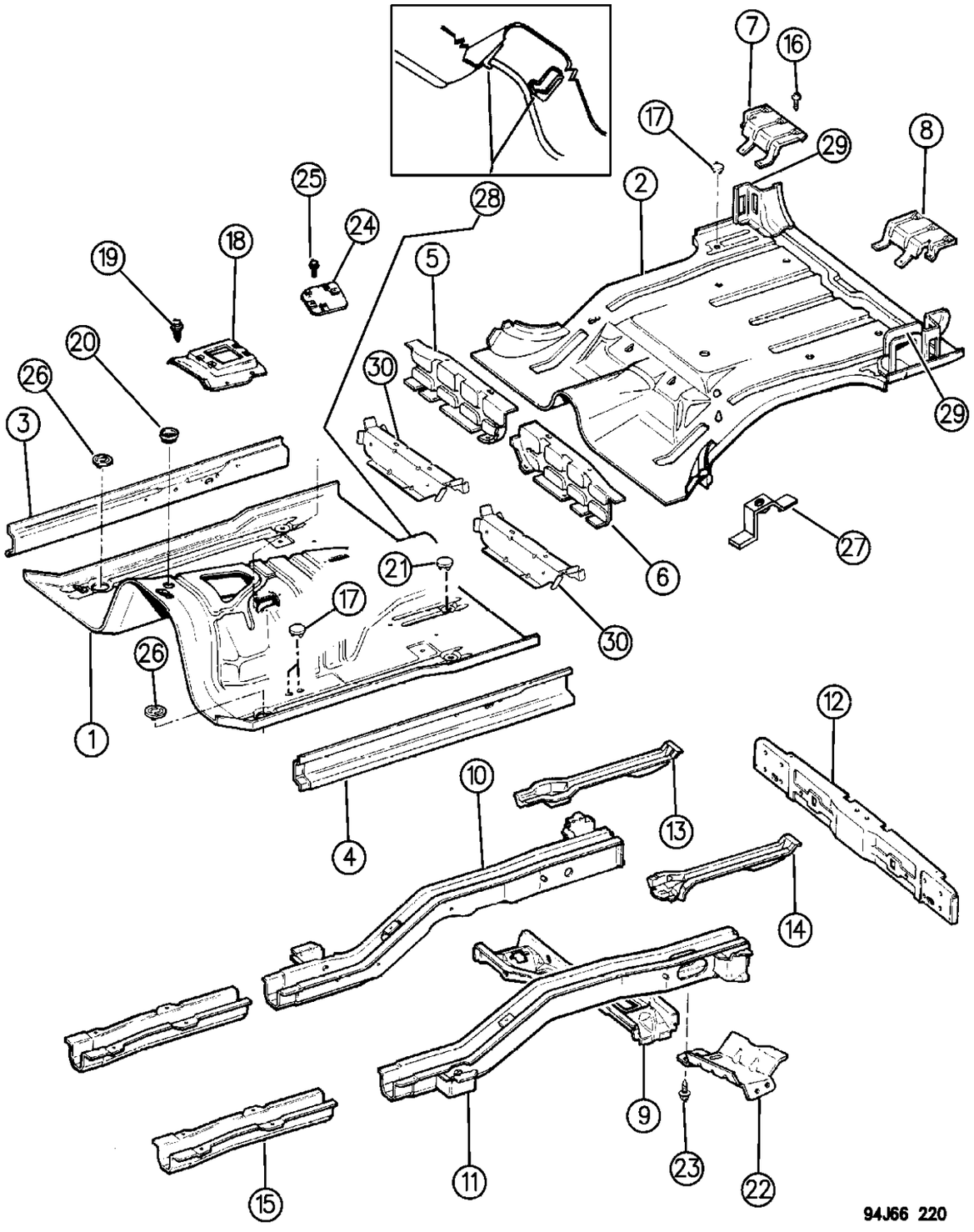

ITEM	PART NUMBER	QTY	BODY	MODEL	DESCRIPTION
1					PAN, Front Floor ***
	5523 5148	1			1994
	5517 4806	1			1995,96
	5523 5148	1			KDX, China, 1995
2					PAN, Rear Floor ***
	5534 5662	1			1994-95-96, Up to 8-21-95
	5523 5379	1			1996, After 8-21-95
3-4		1			SILL, Front Pan ***
	5517 4740-1				1994
	5517 5088-9				1995,96
5	5500 0008	1			CROSSMEMBER, Seat Right
6	5502 7851	1			CROSSMEMBER, Seat Left
7-8	5500 2230-1	1			SUPPORT, Rear Floor Cover
9	5523 5018	1			CROSSMEMBER, Shock
10					SILL, Rear Side, Right ***
	5523 5030	1			1994,95
	5523 5436	1			1996
11					SILL, Rear Side, Left ***
	5523 5031	1			1994,95
	5523 5437	1			1996
12		1			SILL, Rear Cross ***
	5500 0023				1994
	5517 5691				1995,96
13	5700 0022	1			SUPPORT, Fuel Tank Right
14	5500 2935	1			SUPPORT, Fuel Tank Left
15		2			SILL, Center ***
	5500 1206				1994
	5517 5047				1995,96
	5500 1206				1995,96, w/ 1 Barrel Low Compression, KDX
16	3420 2035	6			SCREW
17	5500 6578	10			PLUG, Drain
18					COVER, Transmission
	5300 0580	1			4 Cyl. Engine w/Manual Trans.
	5300 5141	1			6 Cyl. Engine w/Manual Trans.
	5517 4983	1			Diesel Engine w/Manual Trans.
	5300 0704	1			w/Floor Mounted Gear Shift, w/Auto. Trans.
	5500 9171	1			w/Column Shift and 4 W.D.
	5500 7376	1			w/Column Shift and 2 W.D.
19	J400 1701	AR			SCREW
20	J400 0499	1			PLUG
21	5500 6579	5			PLUG
22	5500 3285	1			SHIELD, Splash

MODEL CODES:

72=2 DR Wagon
74=4 DR Wagon
77=Open Body 93" Whlbase
78=Open Body 103" Whlbase - Export
T=2WD
J,N=4WD
U=4WD (RHD)

BODY STYLES:

YJ=Wrangler (4X4) "S"
Weangler (4X4) SE
Wrangler (4X4) Sahara
Wrangler (4X4) Renegade
XJ=Cherokee SE
Cherokee Sport
Cherokee Country
ZJ=Grand Cherokee SE
Grand Cherokee Laredo
Grand Cherolee Limited
ZG=Grand Cherokee European
Y1=Wrangler
X1=Cherokee
Z1=Grand Cherokee
KDX=Vehicles

AR = Use as Required - = Non Illustrated Part P.A.R. = Paint as Required

PANS, FLOOR CHEROKEE XJ
Figure SXJ-220

SXJ-220B

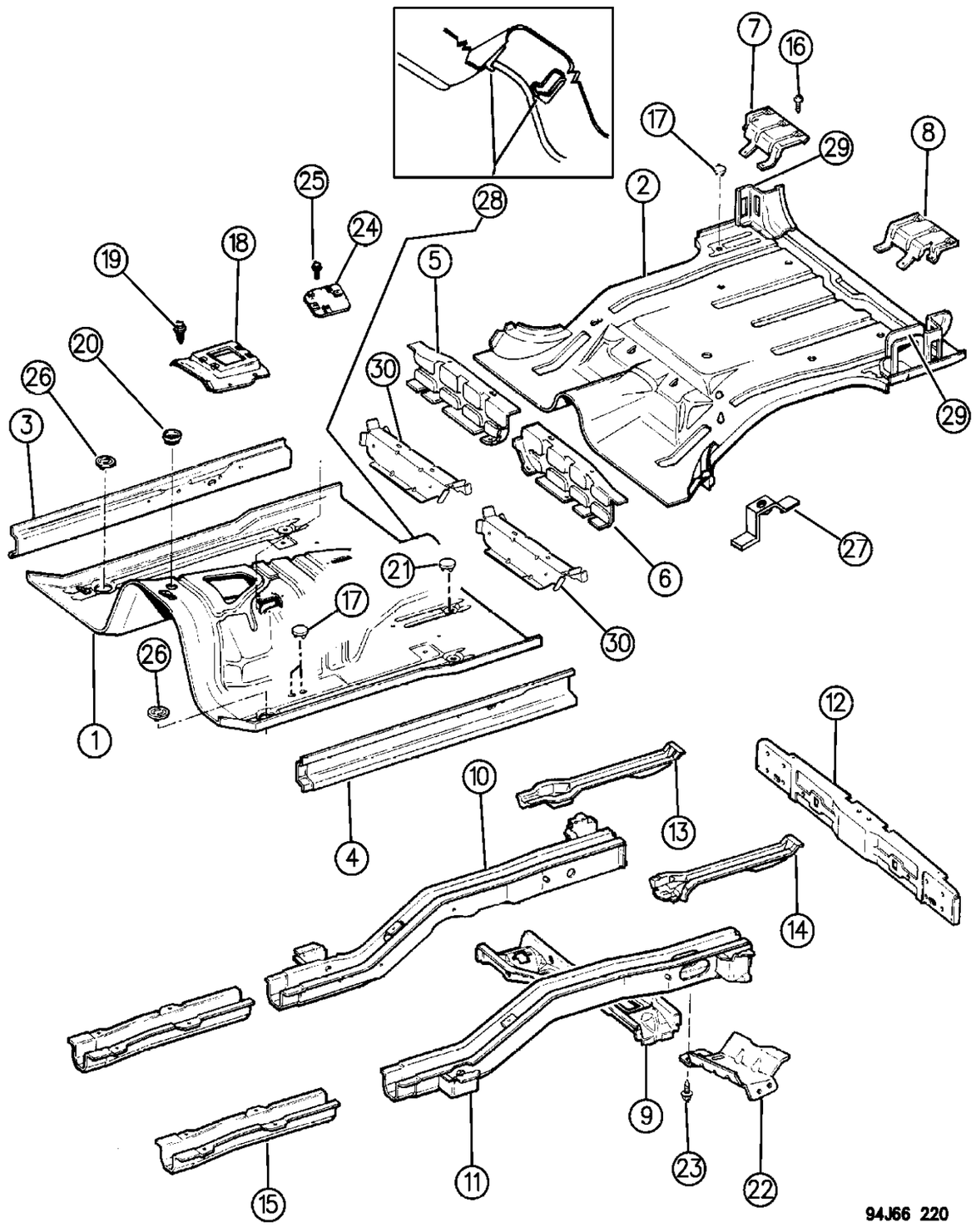

ITEM	PART NUMBER	QTY	BODY	MODEL	DESCRIPTION
23	3420 1895	4			SCREW
24	5501 0460	1			COVER, Transfer Case 2WD
25	3420 1277	5			SCREW, 2WD
26	4586 052	2			PLUG
27	5500 1903	1			BRACKET, Jack
28	5523 4712	2			BRACKET, Hand Brake Cable Mounting
29	5534 5172-3	1			GUSSET, Liftgate Opening Pillar to Floor
30					REINFORCEMENT, Front Seat Front Mounting, 1995,96
	5517 4756	1			Right
	5517 4759	1			Left

MODEL CODES:

72=2 DR Wagon
74=4 DR Wagon
77=Open Body 93" Whlbase
78=Open Body 103" Whlbase - Export
T=2WD
J,N=4WD
U=4WD (RHD)

BODY STYLES:

YJ=Wrangler (4X4) "S"
Weangler (4X4) SE
Wrangler (4X4) Sahara
Wrangler (4X4) Renegade
XJ=Cherokee SE
Cherokee Sport
Cherokee Country
ZJ=Grand Cherokee SE
Grand Cherokee Laredo
Grand Cherolee Limited
ZG=Grand Cherokee European
Y1=Wrangler
X1=Cherokee
Z1=Grand Cherokee
KDX=Vehicles

AR = Use as Required - = Non Illustrated Part P.A.R. = Paint as Required

PLATES, UNDERBODY SKID CHEROKEE XJ
Figure SXJ-230

SXJ-230

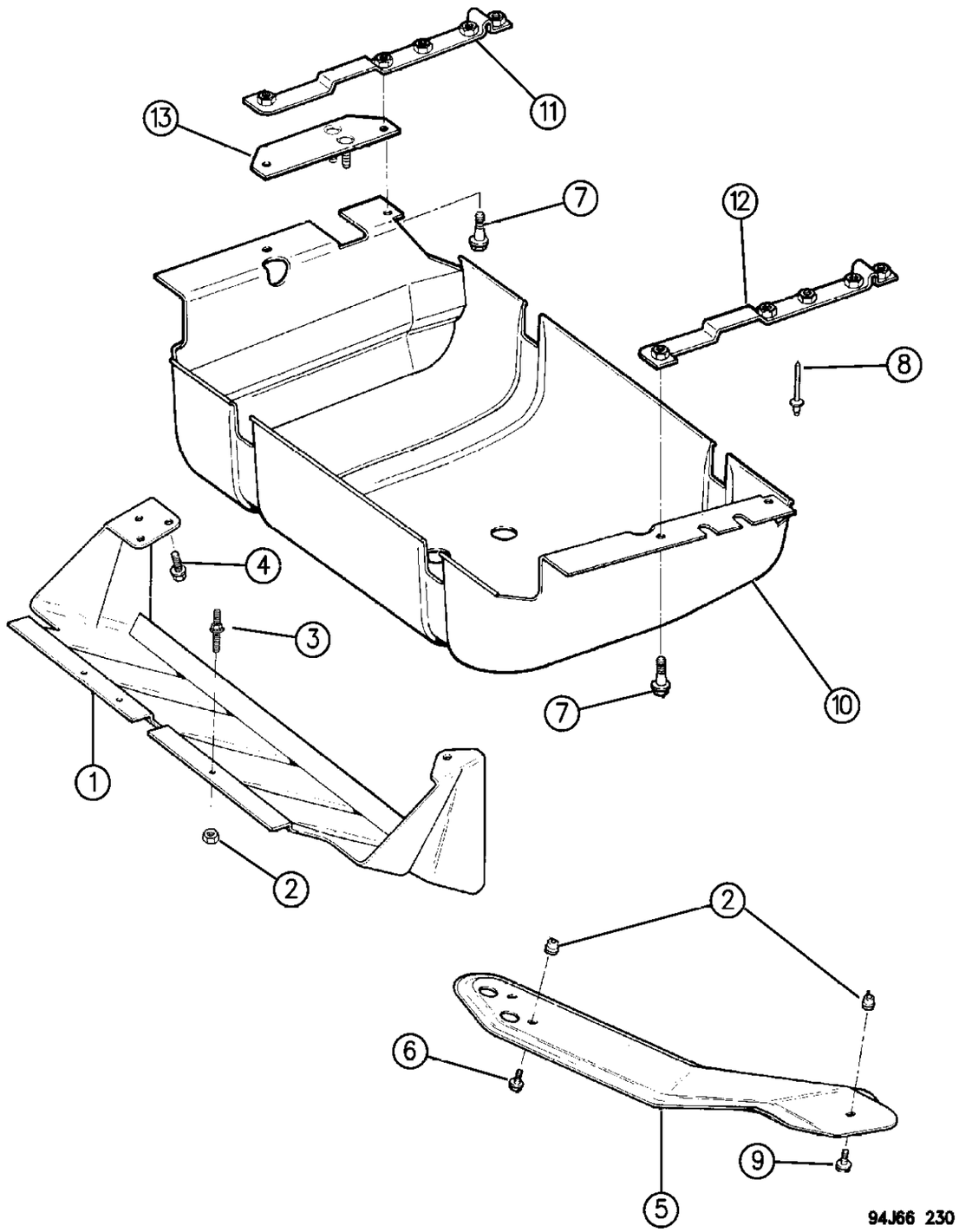

ITEM	PART NUMBER	QTY	BODY	MODEL	DESCRIPTION
1	8220 0613	1			PLATE, Skid Front Axle
2	J420 0046	3			NUTSERT ***
3	3420 2209	3			STUD
4		3			SCREW
	6502 467				4.0L
	3420 2219				2.5L
5	8220 0616	1			PLATE, Skid Transfer Case
6	1150 2850	2			BOLT, 20 mm Long
7	3420 1964	4			BOLT
8	3420 1353	4			RIVET
9	1150 2850	1			BOLT, 35mm Long
10	5200 1512	1			PLATE, Skid Fuel Tank
11-12	5200 1174-5	1			REINFORCEMENT, Sill
13	5200 1511	1			BRACKET, ASSEMBLY

MODEL CODES:

72=2 DR Wagon
74=4 DR Wagon
77=Open Body 93" Whlbase
78=Open Body 103" Whlbase - Export
T=2WD
J,N=4WD
U=4WD (RHD)

BODY STYLES:

YJ=Wrangler (4X4) "S"
Weangler (4X4) SE
Wrangler (4X4) Sahara
Wrangler (4X4) Renegade

XJ=Cherokee SE
Cherokee Sport
Cherokee Country

ZJ=Grand Cherokee SE
Grand Cherokee Laredo
Grand Cherolee Limited
ZG=Grand Cherokee European

Y1=Wrangler
X1=Cherokee
Z1=Grand Cherokee
KDX=Vehicles

AR = Use as Required - = Non Illustrated Part P.A.R. = Paint as Required

« RETURN TO GROUP INDEX

PANELS, LOAD BARRIER AND AUXILIARY FLOOR CHEROKEE 2 DOOR, FRENCH COMMERCIAL PACKAGE XJ
Figure SXJ-240

SXJ-240

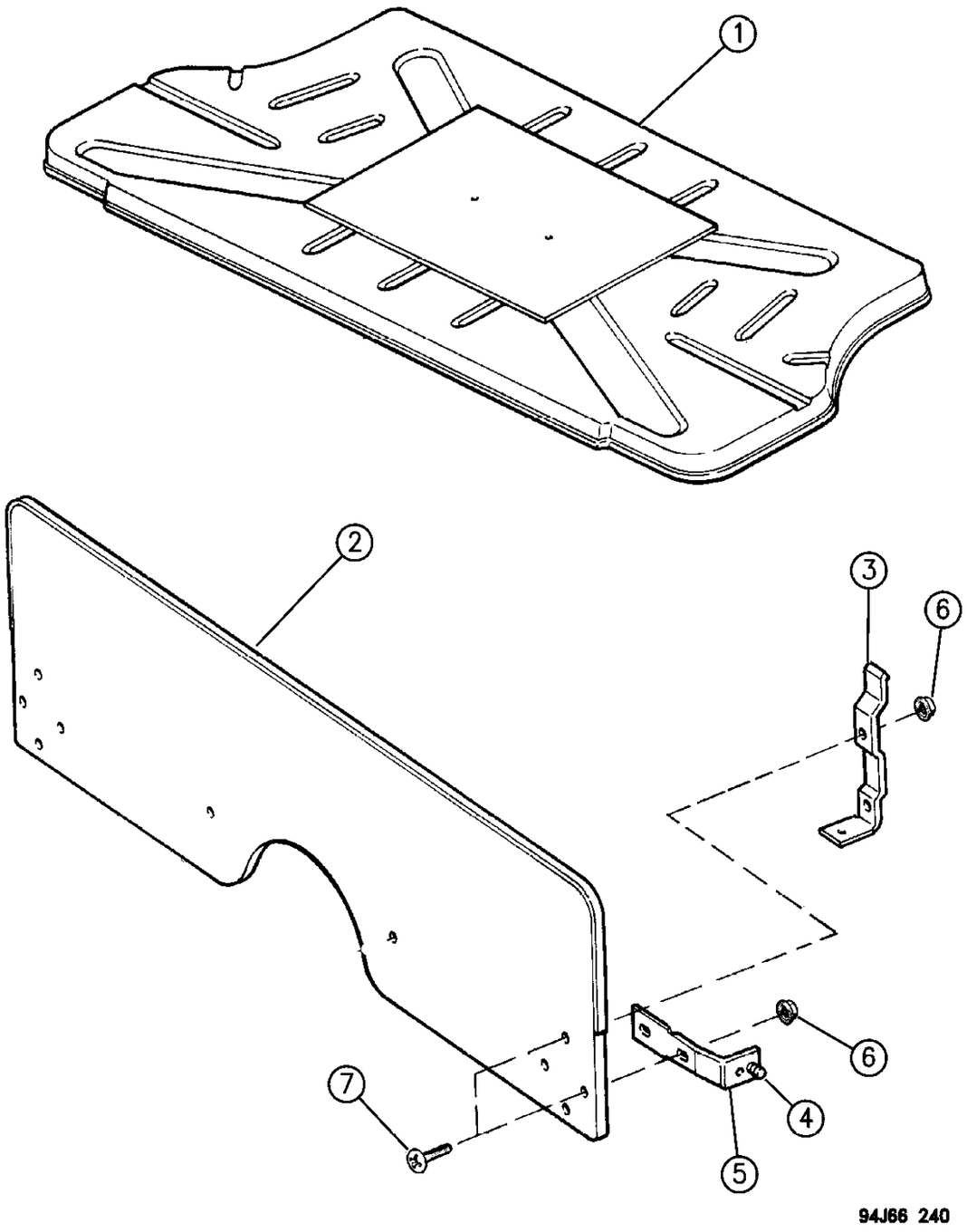

ITEM	PART NUMBER	QTY	BODY	MODEL	DESCRIPTION
1	5502 6020	1			PANEL, Floor
2					PANEL, Load Barrier, (Not Serviced)
3	5AD7 7KA8	2			BRACKET, Floor Dark Charcoal
4	3420 1749	2			BOLT
5	5AK4 8KA8	2			BRACKET, Sill, Dark Charcoal
5	5AK4 8KA8	1			BRACKET, Sill
6	J400 3909	8			NUT
7	J400 5651	8			SCREW

MODEL CODES:

72=2 DR Wagon
74=4 DR Wagon
77=Open Body 93" Whlbase
78=Open Body 103" Whlbase - Export
T=2WD
J,N=4WD
U=4WD (RHD)

BODY STYLES:

YJ=Wrangler (4X4) "S"
Weangler (4X4) SE
Wrangler (4X4) Sahara
Wrangler (4X4) Renegade

XJ=Cherokee SE
Cherokee Sport
Cherokee Country

ZJ=Grand Cherokee SE
Grand Cherokee Laredo
Grand Cherolee Limited
ZG=Grand Cherokee European

Y1=Wrangler
X1=Cherokee
Z1=Grand Cherokee
KDX=Vehicles

AR = Use as Required - = Non Illustrated Part P.A.R. = Paint as Required

« RETURN TO GROUP INDEX

PLUGS CHEROKEE XJ
Figure SXJ-310

SXJ-310B

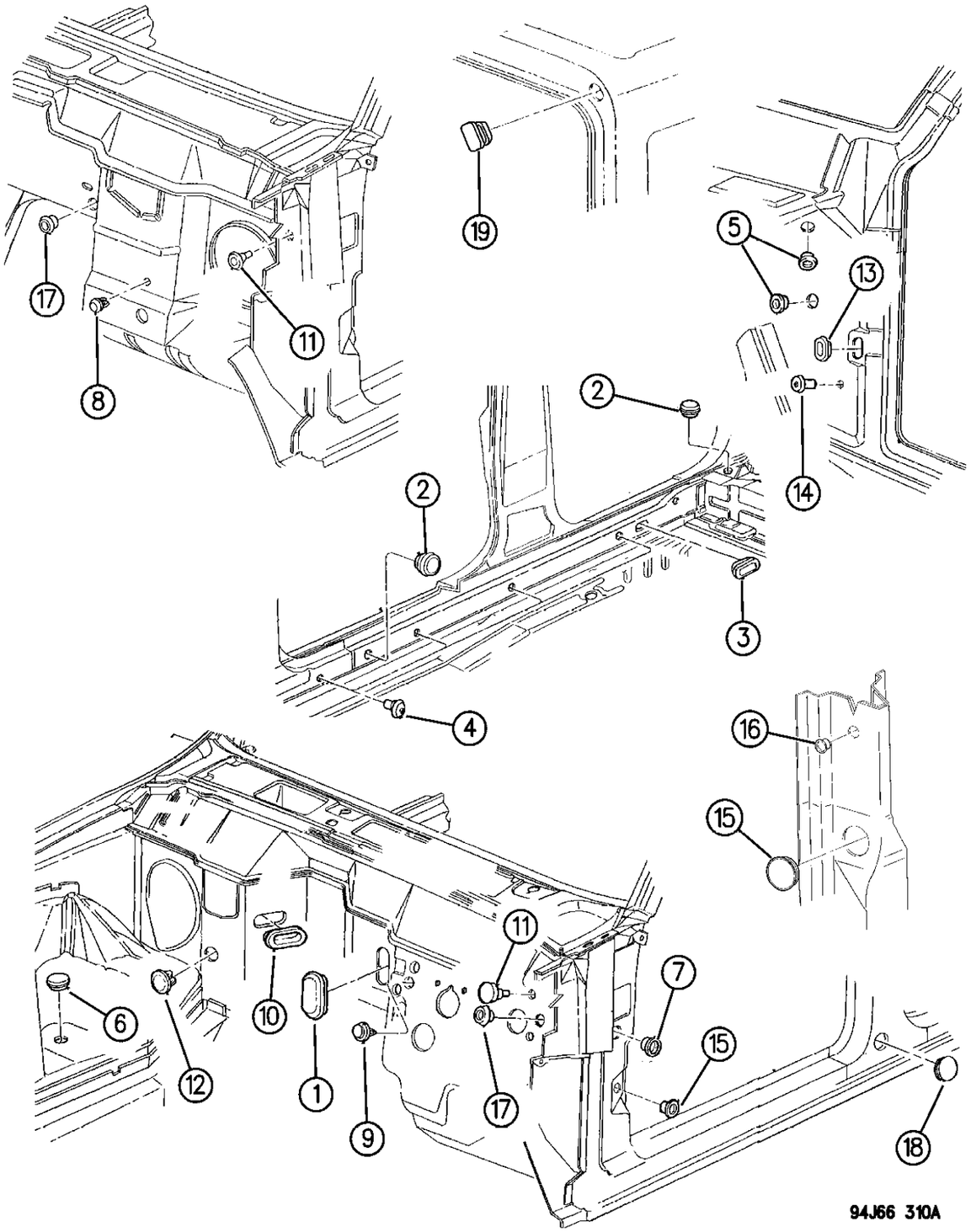

ITEM	PART NUMBER	QTY	BODY	MODEL	DESCRIPTION
1	3420 2215	1			PLUG
2	3420 1532	4			PLUG
3	3420 1613	2			PLUG
4	3420 1973	4			PLUG
5	J400 4649	3			PLUG
6	J400 5015	AR			PLUG
7	J400 0377	2			PLUG
8	5500 6578	1			PLUG, Dash Panel Opening, RHD
9	J400 0334	1			PLUG
10	6502 246	1			PLUG
11		1			PLUG, Not Serviced
12	5500 9554	1			PLUG
13	5500 5400	2			PLUG
14	3420 1973	3			PLUG
15	5500 2367	4			PLUG, (Also used on 55346270-1)
16	3420 1614	2			PLUG
17	6034 362	1			PLUG
18	J400 0377	2			PLUG
19	5515 4659	1			PLUG, Roof, Less Wiper

MODEL CODES:

72=2 DR Wagon
74=4 DR Wagon
77=Open Body 93" Whlbase
78=Open Body 103" Whlbase - Export
T=2WD
J,N=4WD
U=4WD (RHD)

BODY STYLES:

YJ=Wrangler (4X4) "S"
Weangler (4X4) SE
Wrangler (4X4) Sahara
Wrangler (4X4) Renegade

XJ=Cherokee SE
Cherokee Sport
Cherokee Country

ZJ=Grand Cherokee SE
Grand Cherokee Laredo
Grand Cherolee Limited
ZG=Grand Cherokee European

Y1=Wrangler
X1=Cherokee
Z1=Grand Cherokee
KDX=Vehicles

AR = Use as Required - = Non Illustrated Part P.A.R. = Paint as Required

« RETURN TO GROUP INDEX

PANELS, FRONT END INNER AND WHEELHOUSE CHEROKEE XJ
Figure SXJ-430

SXJ-430B

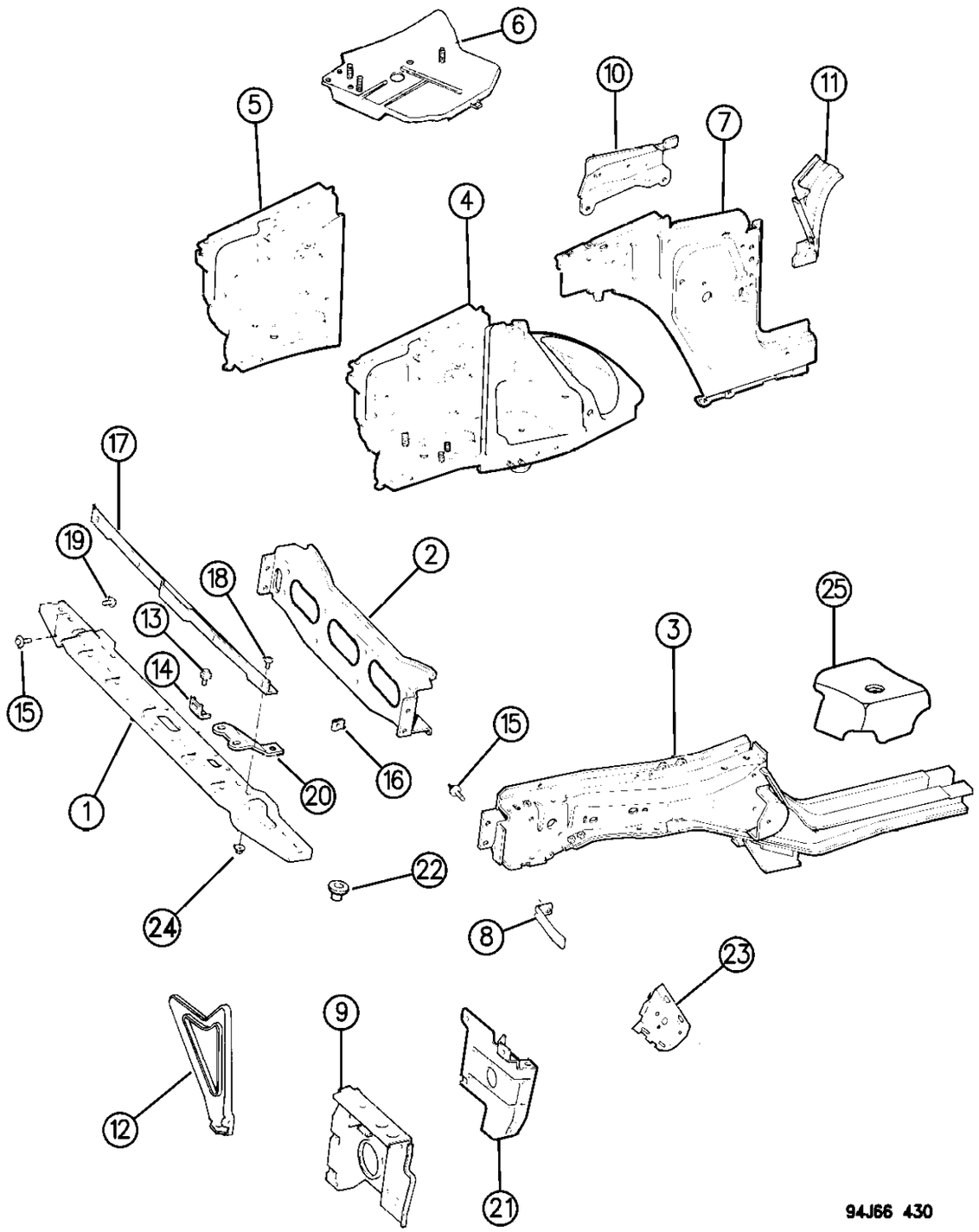

ITEM	PART NUMBER	QTY	BODY	MODEL	DESCRIPTION
1					CROSSMEMBER, Radiator
	5534 5545	1			Gas Engine
		1			Diesel Engine
	5501 1035	1			1994
	5517 4973	1			1995,96
2	5534 5942	1			CROSSMEMBER, Front Sill
3					SILL, Body Side
	4798 084-5	1			
	5523 5082-3	1			KDX - RHD
4					WHEELHOUSE, Assembly ***
	5534 5572-3	1			1994
	5517 5640	1			Right, 1995,96
	5517 5641	1			Left, 1995
	5523 5517	1			Left, 1996
-		1			PANEL, Front Wheelhouse Rear, RHD
					Right
	5534 5466				1994
	5517 5636				1995,96
					Left
	5534 5561				1994
	5517 5637				1995,96
	9428 962	3			SCREW, Left Side Only, .250-20.625
5					WHEELHOUSE ***
	5502 6304-5	1			1994
	5517 4976	1			Right, 1995,96
	5517 4977	1			Left, 1995
	5523 5513	1			Left, 1996
					SUPPORT, Front Spring Shock Mounting
	5534 5972-3	1			1994
	5517 4992-3	1			1995,96
6	5501 5210	1			REINFORCEMENT, Battery Tray
7		1			PANEL, Cowl Side
	5534 5854-5				1994
	5517 4988				1995-96, Right
	5517 4989				1995-96, Left
8	5501 9221	2			REINFORCEMENT, (Fastend to Brace 55013176-7)
9					BAFFLE, Radiator ***
	5534 5132-3	1			1994
					1995, Right
	5534 5132	1			Gas Engine
	5517 4980	1			Diesel Engine
	5523 5220	1			1996, All Engines

MODEL CODES:

72=2 DR Wagon
74=4 DR Wagon
77=Open Body 93" Whlbase
78=Open Body 103" Whlbase - Export
T=2WD
J,N=4WD
U=4WD (RHD)

BODY STYLES:

YJ=Wrangler (4X4) "S"
Weangler (4X4) SE
Wrangler (4X4) Sahara
Wrangler (4X4) Renegade
XJ=Cherokee SE
Cherokee Sport
Cherokee Country
ZJ=Grand Cherokee SE
Grand Cherokee Laredo
Grand Cherolee Limited
ZG=Grand Cherokee European
Y1=Wrangler
X1=Cherokee
Z1=Grand Cherokee
KDX=Vehicles

AR = Use as Required - = Non Illustrated Part P.A.R. = Paint as Required

PANELS, FRONT END INNER AND WHEELHOUSE CHEROKEE XJ
Figure SXJ-430

SXJ-430B

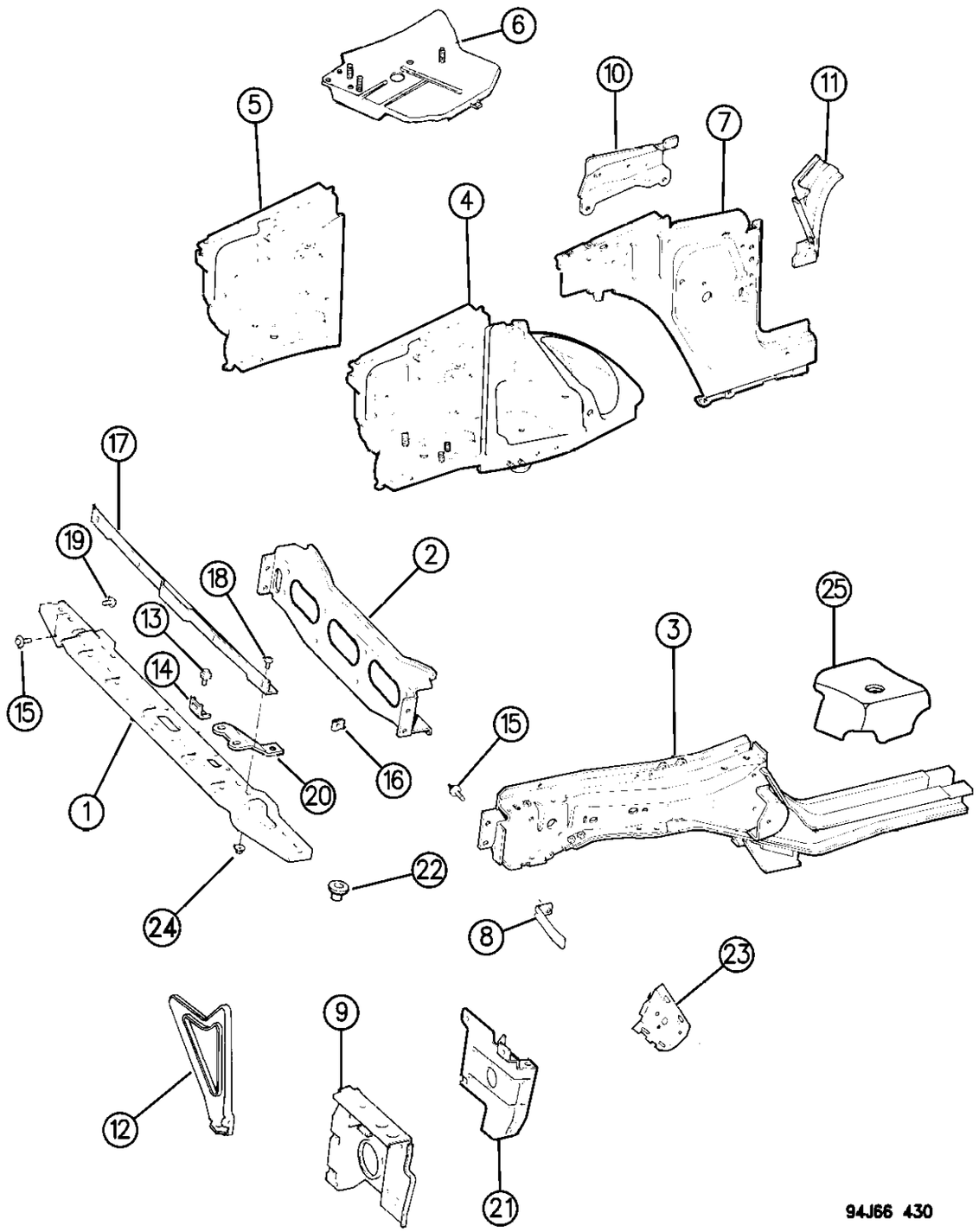

ITEM	PART NUMBER	QTY	BODY	MODEL	DESCRIPTION
	5517 4981	1			1995, Left, (All Engines)
	5523 5221	1			1996, Left, (All Engines)
-	6504 147	2			SCREW and WASHER, Baffle to Fender, M6x1.0x16.00
-	5500 9776-7	1			REINFORCEMENT, Radiator Baffle, (Serviced in 55345132-3)
10	5534 5340-1	1			REINFORCEMENT, Cowl
11	5534 6028-9	1			REINFORCEMENT, Pillar
12	5501 3176-7	1			BRACE, Side Sill
13	3420 1809	8			SCREW
14	5500 9473	1			BRACKET
15	3420 1808	5			SCREW
16	1150 3714	7			NUT
17	5501 0074	1			BRACKET, (Attaches header panel to radiator support)
18	3420 1450	4			SCREW
19	3420 2399	2			SCREW
20		1			BRACE
	5501 9697				1994
	5517 5247				1995,96
21					SUPPORT, Radiator 4 Cyl. or Diesel Engine
	5500 9188	1			Right
	5534 5449	1			Left
22	3420 1348	2			NUT, Well
23	5500 6948-9	1			REINFORCEMENT, Inner Sill
24	3420 1246	4			NUT, Hex
25	5534 6022-3	1			REINFORCEMENT, Front Spring & Shock Mounting

MODEL CODES:

72=2 DR Wagon
74=4 DR Wagon
77=Open Body 93" Whlbase
78=Open Body 103" Whlbase - Export
T=2WD
J,N=4WD
U=4WD (RHD)

BODY STYLES:

YJ=Wrangler (4X4) "S"
Weangler (4X4) SE
Wrangler (4X4) Sahara
Wrangler (4X4) Renegade
XJ=Cherokee SE
Cherokee Sport
Cherokee Country
ZJ=Grand Cherokee SE
Grand Cherokee Laredo
Grand Cherolee Limited
ZG=Grand Cherokee European
Y1=Wrangler
X1=Cherokee
Z1=Grand Cherokee
KDX=Vehicles

AR = Use as Required - = Non Illustrated Part P.A.R. = Paint as Required

FENDERS, FRONT CHEROKEE XJ
Figure SXJ-440

SXJ-440

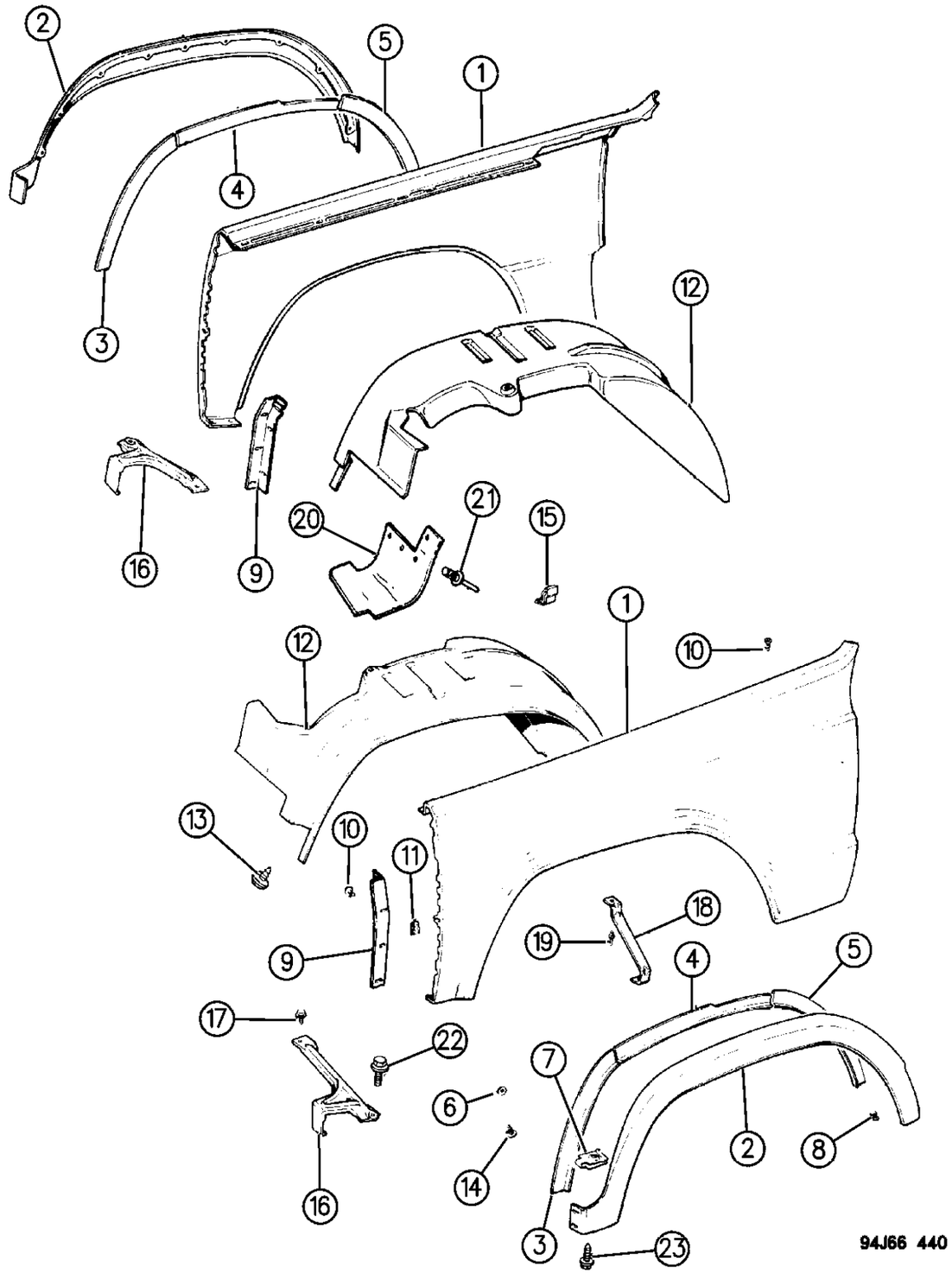

ITEM	PART NUMBER	QTY	BODY	MODEL	DESCRIPTION
1					FENDER, Modification Required ***
	5502 9858-9	1			1994
	5517 5174-5	1			1995
	5523 5226-7	1			1996
	5517 4974-5	1			1995, Export
	5523 5216-7	1			1996, Export
2					APPLIQUE, Fender, P.A.R.
					Gloss Black
	5AG08-9 JX8	1			1994
	5EG22-3 RX8	1			1995
	4798 782-3	1			1996
		1			Flat Black
	5AG30-1 JX9	1			1994
	5EG20-1 RX9	1			1995
	5EU60-1 SX9	1			1996
3	5500 3232-3	1			RETAINER, Applique
4	5500 3234	2			RETAINER, Applique
5	5500 3236-7	1			RETAINER, Applique
6	J420 0408	18			NUT
7	J044 5446	2			NUT
8	1150 2843	4			SCREW
9	5500 1112-3	1			SUPPORT, (Goes between fender and rad. support)
10	3420 1661	AR			SCREW
11	1150 3714	AR			NUT
12	5517 5008-9	1			PANEL, Inner Protective
13	J400 4919	16			FASTENER
14	J400 7117	14			SCREW
15	J368 9548	2			BUMPER, Hood
16	5500 4222-3	1			BRACE, (Goes between fender/rad. support & front spoiler)
17	3420 2575	2			SCREW
18	5500 3652	2			BRACE
19	3420 1208	2			RIVET
20	5500 6274	2			SEAL
21	6500 911	8			RIVET
22	3420 1895	2			SCREW
23	3420 2358	4			SCREW

MODEL CODES:

72=2 DR Wagon
74=4 DR Wagon
77=Open Body 93" Whlbase
78=Open Body 103" Whlbase - Export
T=2WD
J,N=4WD
U=4WD (RHD)

BODY STYLES:

YJ=Wrangler (4X4) "S"
Weangler (4X4) SE
Wrangler (4X4) Sahara
Wrangler (4X4) Renegade
XJ=Cherokee SE
Cherokee Sport
Cherokee Country
ZJ=Grand Cherokee SE
Grand Cherokee Laredo
Grand Cherolee Limited
ZG=Grand Cherokee European
Y1=Wrangler
X1=Cherokee
Z1=Grand Cherokee
KDX=Vehicles

AR = Use as Required - = Non Illustrated Part P.A.R. = Paint as Required

« RETURN TO GROUP INDEX

HOOD, LATCH AND HINGES CHEROKEE XJ
Figure SXJ-520

SXJ–520A

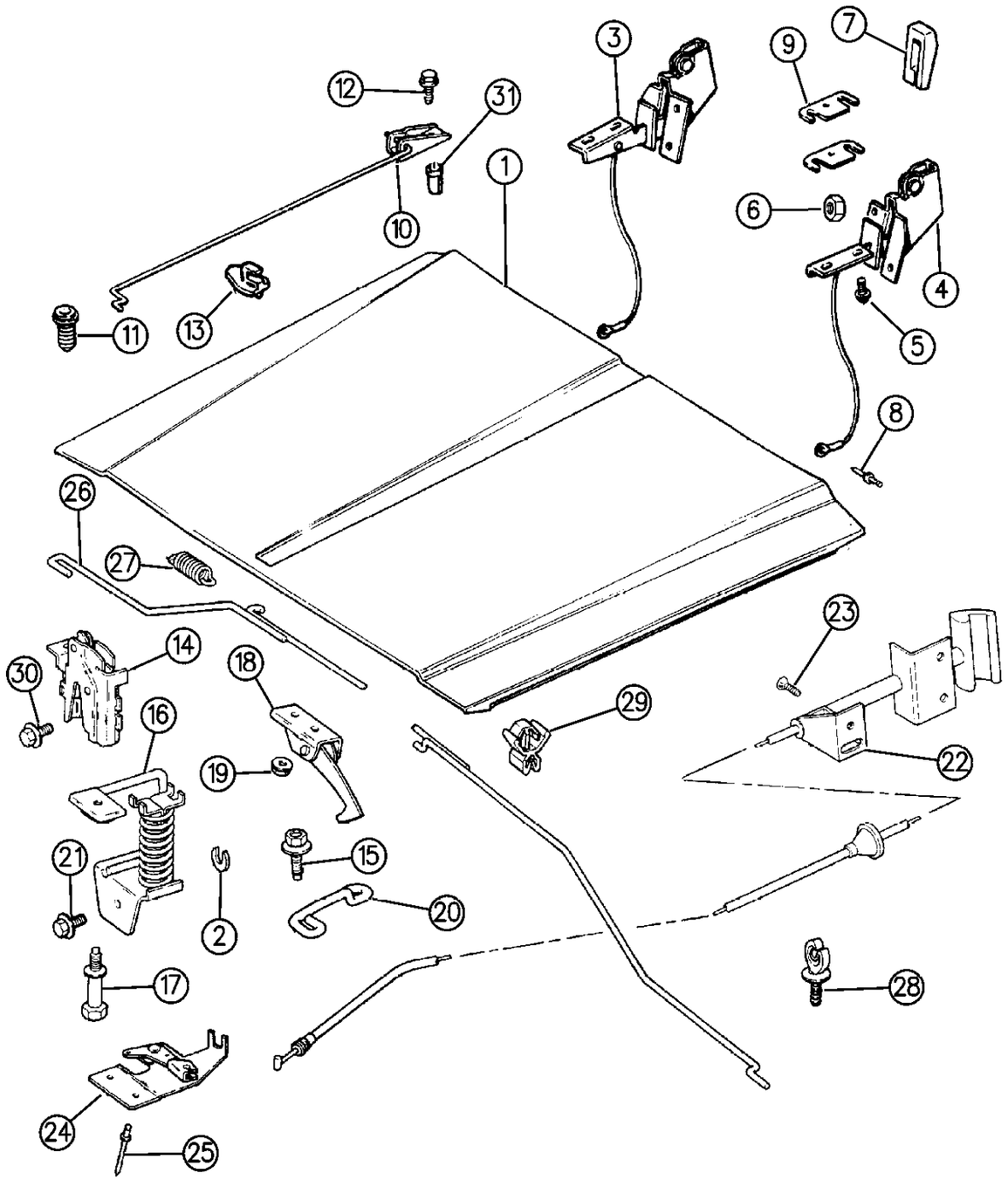

ITEM	PART NUMBER	QTY	BODY	MODEL	DESCRIPTION
1					HOOD ***
	5525 4574	1			
	5523 5451	1			EXPORT
2	3420 2581	AR			SHIM
3-4	5507 5180-1	1			HINGE, Hood
5	3420 1818	4			SCREW
6	6500 284	6			NUT and WASHER
7	5500 1982	2			SEAL
8	J400 5791	2			RIVET
9	J068 0435	4			SHIM
10	5501 7480	1			ROD
11	4103 165	1			STOP, Hood, (Behind Lock Assy.)
12	3420 1807	2			SCREW
13		1			CLIP, Hood Prop Rod
	5502 7404				w/Diesel
	5507 5480				w/o Diesel
14	5500 9172	2			LOCK ASSEMBLY, Hood
15	6504 641	2			SCREW
16	5507 5884	2			STRIKER, Latch
17	3420 2679	2			BOLT
18	5500 9998	1			LOCK ASSEMBLY, Hood
19	1150 3750	2			NUT
20	5500 9999	1			STRIKER, Latch
21		2			SCREW, M8x1.25x20.00, Not Serviced
22					CABLE, Hood Release
	5502 6030	1			
	5507 5570	1			KDX - RHD
23	3420 1453	3			SCREW
24	5507 4526	1			BELLCRANK ASSEMBLY ***
25	3420 1208	2			RIVET
26	5507 5442	1			ROD, Hood Latch
27	5502 9718	1			SPRING
28	3200 0404	2			CLIP
29	3420 2688	2			CLIP
30	3420 2005	2			SCREW
31	3420 1595	1			NUT, Insert

MODEL CODES:

72=2 DR Wagon
74=4 DR Wagon
77=Open Body 93" Whlbase
78=Open Body 103" Whlbase - Export
T=2WD
J,N=4WD
U=4WD (RHD)

BODY STYLES:

YJ=Wrangler (4X4) "S"
Weangler (4X4) SE
Wrangler (4X4) Sahara
Wrangler (4X4) Renegade

XJ=Cherokee SE
Cherokee Sport
Cherokee Country

ZJ=Grand Cherokee SE
Grand Cherokee Laredo
Grand Cherolee Limited
ZG=Grand Cherokee European

Y1=Wrangler
X1=Cherokee
Z1=Grand Cherokee
KDX=Vehicles

AR = Use as Required - = Non Illustrated Part P.A.R. = Paint as Required

« RETURN TO GROUP INDEX

PANELS, COWL AND DASH CHEROKEE XJ
Figure SXJ-620

SXJ-620

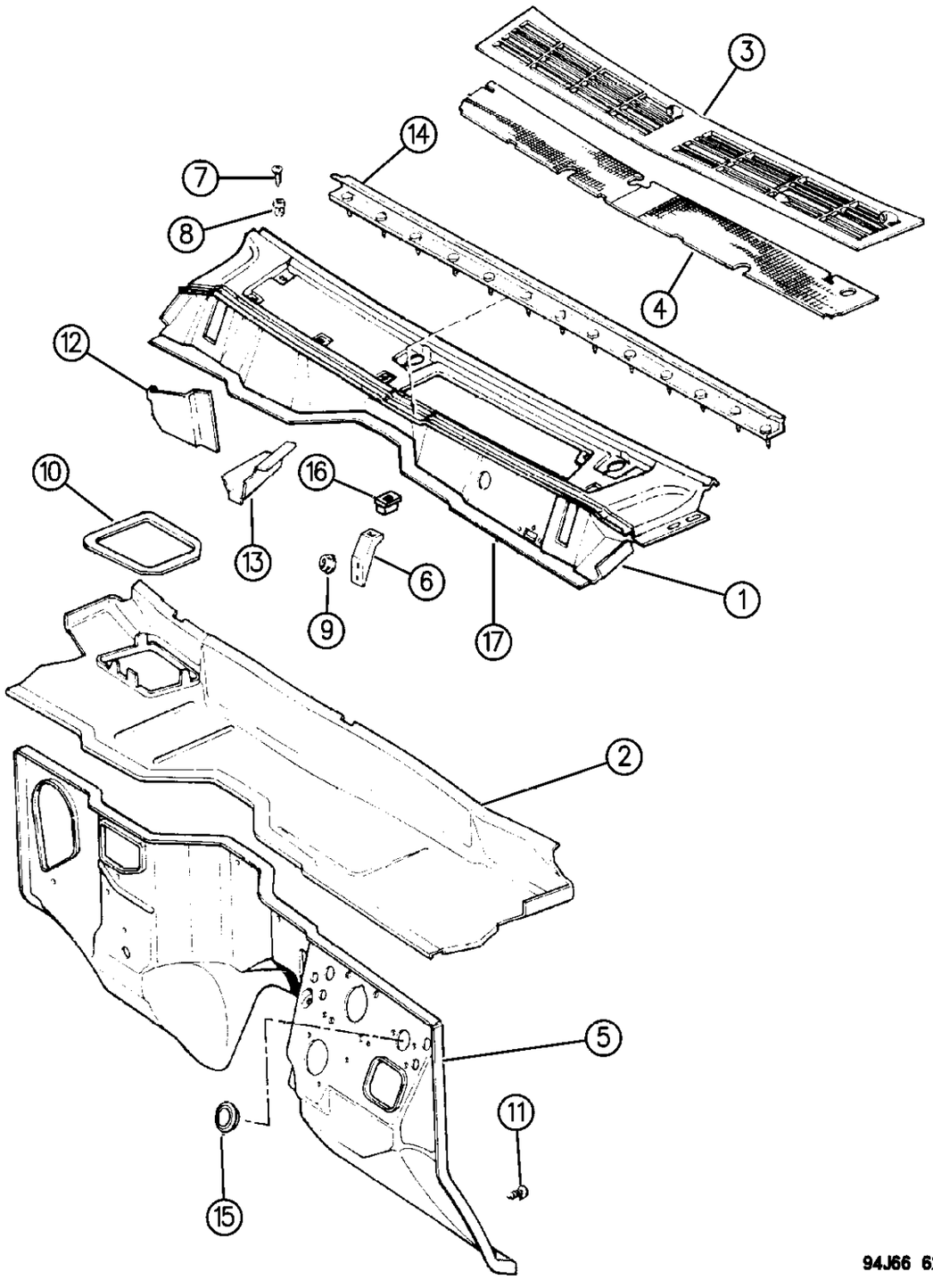

ITEM	PART NUMBER	QTY	BODY	MODEL	DESCRIPTION
1		1			PANEL, Cowl Top
	5534 5056				1994
	5517 5647				1995,96
					R.H.D.
	5700 9015				1994, Malaysia
	5700 9063				1995,96, Malaysia, Indonsia
2					PANEL, Air Chamber, KDX
	5517 5021	1			1994
	5517 5527	1			1995
	5523 5280	1			1996, w/2.5L Carb.
	5523 5279	1	X1		1996
-	5503 7128	1			BAFFLE ASSY., Air Inlet ***
3	5500 8832	1			GRILLE, Cowl Top
4	5500 8833	1			SCREEN, Grille
5					PANEL, Dash
	5534 6292	1			1994
	5517 4784	1			1995,96
6	5523 5370	1			BRACKET, Extension
7	3420 1230	8			SCREW
8	J400 5242	6			NUT
9	3420 1358	2			NUT
10		1			SEAL, Heater Opening
	5517 4737				
	5500 1008				KDX
11	J400 7117	6			FASTENER
12	5500 6544	1			SHIELD, Plenum Drain
13	5500 4918	1			SHIELD, Cowl Top
14					SEAL, Cowl Top
	5513 4984	1			w/Rivets
	5523 5178	1			Stick-on Type
15	J400 0334	1			PLUG
16	3420 1872	1			NUT
17		1			EXTENSION, Cowl Top
	5534 5055				1994
	5517 5638				1995,96

MODEL CODES:

72=2 DR Wagon
74=4 DR Wagon
77=Open Body 93" Whlbase
78=Open Body 103" Whlbase - Export
T=2WD
J,N=4WD
U=4WD (RHD)

BODY STYLES:

YJ=Wrangler (4X4) "S"
Weangler (4X4) SE
Wrangler (4X4) Sahara
Wrangler (4X4) Renegade
XJ=Cherokee SE
Cherokee Sport
Cherokee Country
ZJ=Grand Cherokee SE
Grand Cherokee Laredo
Grand Cherolee Limited
ZG=Grand Cherokee European
Y1=Wrangler
X1=Cherokee
Z1=Grand Cherokee
KDX=Vehicles

AR = Use as Required - = Non Illustrated Part P.A.R. = Paint as Required

« RETURN TO GROUP INDEX

COWL AND DASH PANEL R.H.D. XJ
Figure SXJ-630

SXJ-630B

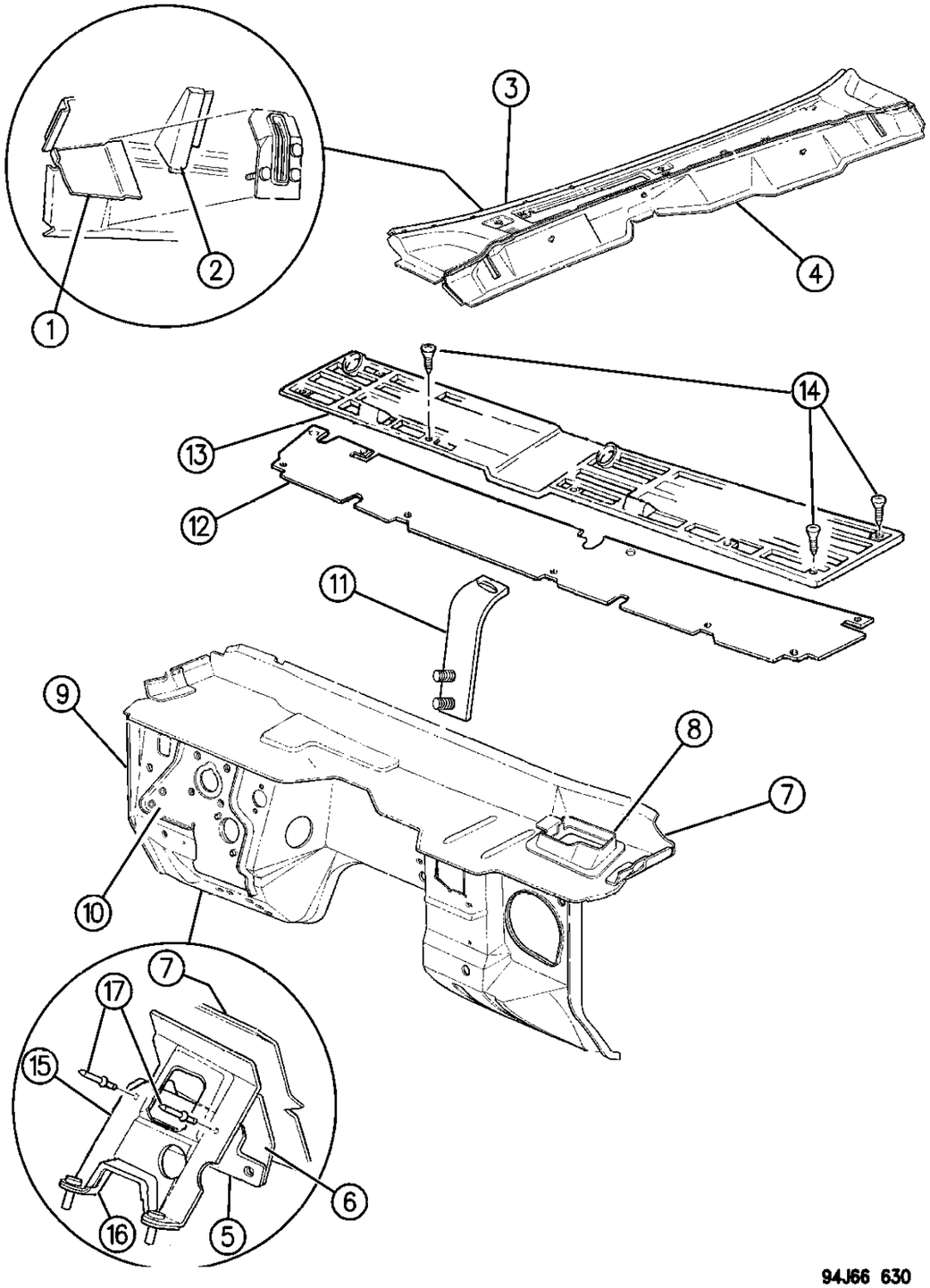

ITEM	PART NUMBER	QTY	BODY	MODEL	DESCRIPTION
1	5502 7542	1			SHIELD, Plemun Drain
2	5502 7543	1			SHIELD, Cowl Top
3	5502 7536	1			PANEL, Cowl Top
4		1			EXTENSION, Cowl Top
	5502 7537				RHD, China
	5517 5639				RHD
5	5502 7527	1			BRACE, Brake Pedal Bracket to Steering Column Support
6	5502 7523	1			SUPPORT, Cowl Air Chanber to Brake Pedal Bracket
7					PANEL, Cowl Air Chamber
	5502 7524	1			1994,95
	5523 5388	1			1996
8					DEFLECTOR, Cowl Air Chamber ***
	5534 4552	1			1994,95
	5503 7128	1			1996, Baffle Assy., Air Inlet
9		1			PANEL, Dash
	5700 9013				1994
	5700 9049				1995,96
10		1			REINFORCEMENT, Brake Cylinder
	5502 7521				1994
	5700 9050				1995,96
11	5523 5371	1			BRACKET, Grille to Cowl Extension
12	5502 7697	1			SCREEN
13	5502 7696	1			GRILLE, Panel Cowl Top
14	3420 1230	7			SCREW
15		1			SUPPORT, Cowl Air Chamber to Steering Bracket
	5502 7526	1			1994
	5517 4823	1			1995,96
16	5517 5526	1			BRACKET, Steering Column Support Upper
17	3420 1208	2			RIVET

MODEL CODES:

72=2 DR Wagon
74=4 DR Wagon
77=Open Body 93" Whlbase
78=Open Body 103" Whlbase - Export
T=2WD
J,N=4WD
U=4WD (RHD)

BODY STYLES:

YJ=Wrangler (4X4) "S"
Weangler (4X4) SE
Wrangler (4X4) Sahara
Wrangler (4X4) Renegade
XJ=Cherokee SE
Cherokee Sport
Cherokee Country
ZJ=Grand Cherokee SE
Grand Cherokee Laredo
Grand Cherolee Limited
ZG=Grand Cherokee European
Y1=Wrangler
X1=Cherokee
Z1=Grand Cherokee
KDX=Vehicles

AR = Use as Required - = Non Illustrated Part P.A.R. = Paint as Required

GLASS, WINDSHIELD, BACKLITE AND MIRROR CHEROKEE XJ
Figure SXJ-750

SXJ-750

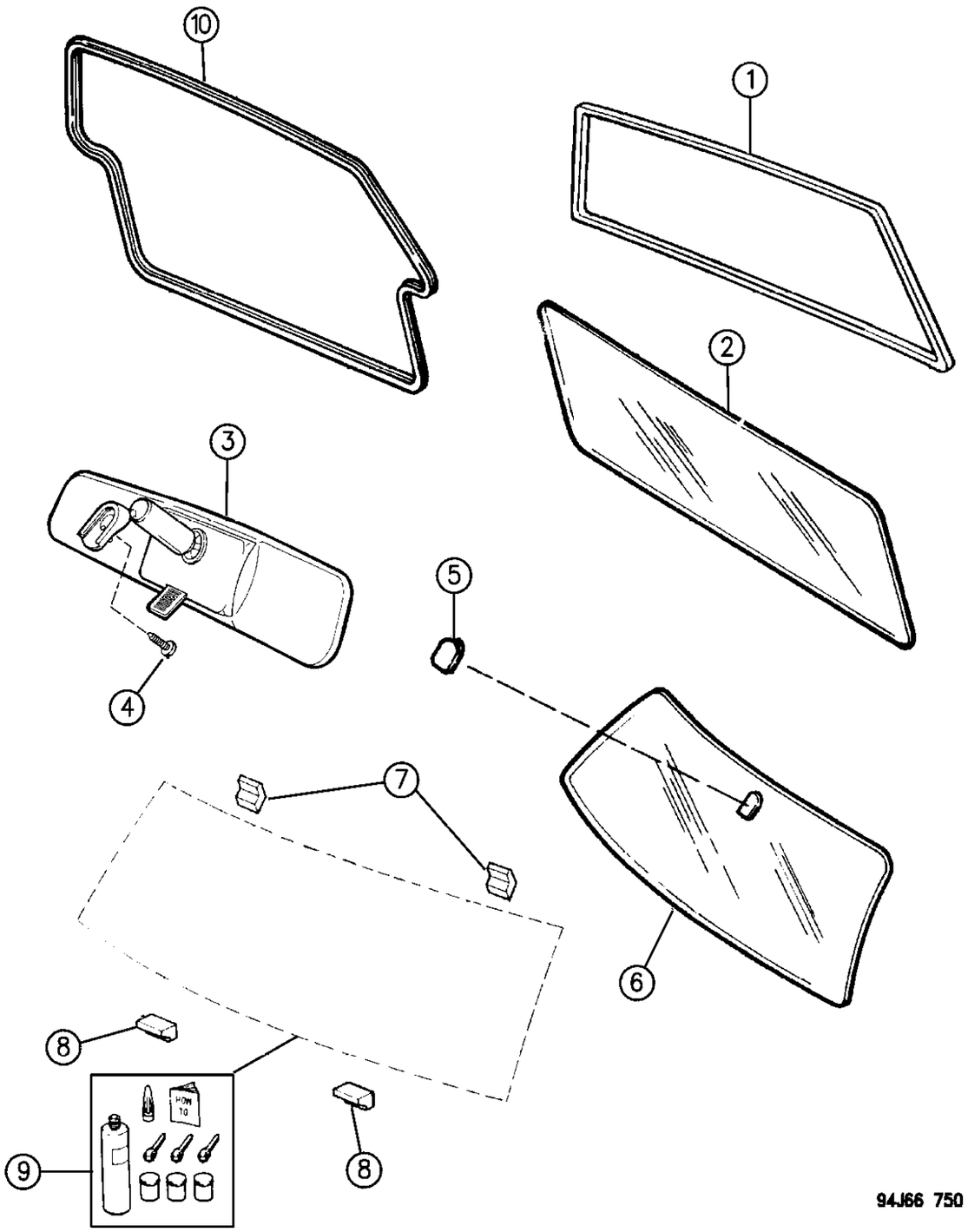

ITEM	PART NUMBER	QTY	BODY	MODEL	DESCRIPTION
1	5500 7134	1			SEAL, Lift Door Glass
2		1			BACKLITE
	5513 4744				Tinted
	5513 5102				Tinted, Heated
					Privacy, Heated
	5513 4742				1994
	5517 5090				1995,96, EUROPE
3	4520 336	1			MIRROR, Inside Rear View
4	6031 094	1			SCREW
5	4054 098	1			BUTTON, Mirror
6					GLASS, Windshield Tinted
	5513 4793	1			1994
	5515 4994	1			1995,96
7	5505 2617	2			SPACER, Windshield Top
8	5500 2604	2			SPACER, Windshield Bottom
9	8310 0051	AR			MOUNTING KIT, Windshield ***
10					SEAL, Liftgate to Body
	5501 5783	1			1994,95, Up to 4-3-95
	5523 5403	1			1995,96, After 4-3-95
-	4864 015	1			INSTALLATION PACKAGE, Windshield ***

MODEL CODES:

72=2 DR Wagon
74=4 DR Wagon
77=Open Body 93" Whlbase
78=Open Body 103" Whlbase - Export
T=2WD
J,N=4WD
U=4WD (RHD)

BODY STYLES:

YJ=Wrangler (4X4) "S"
Weangler (4X4) SE
Wrangler (4X4) Sahara
Wrangler (4X4) Renegade
XJ=Cherokee SE
Cherokee Sport
Cherokee Country
ZJ=Grand Cherokee SE
Grand Cherokee Laredo
Grand Cherolee Limited
ZG=Grand Cherokee European
Y1=Wrangler
X1=Cherokee
Z1=Grand Cherokee
KDX=Vehicles

AR = Use as Required - = Non Illustrated Part P.A.R. = Paint as Required

« RETURN TO GROUP INDEX

WINDOWS, QUARTER 2 AND 4 DOOR CHEROKEE XJ
Figure SXJ-760

SXJ-760A

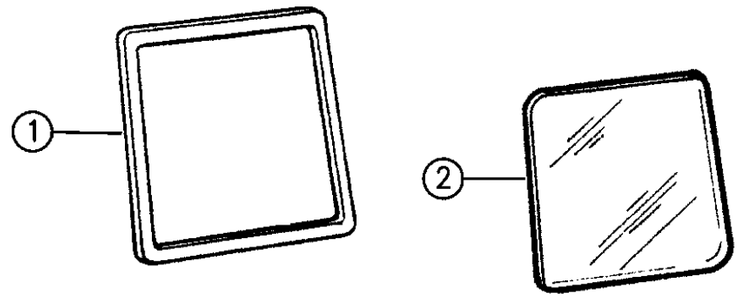

4 DOOR

2 DOOR

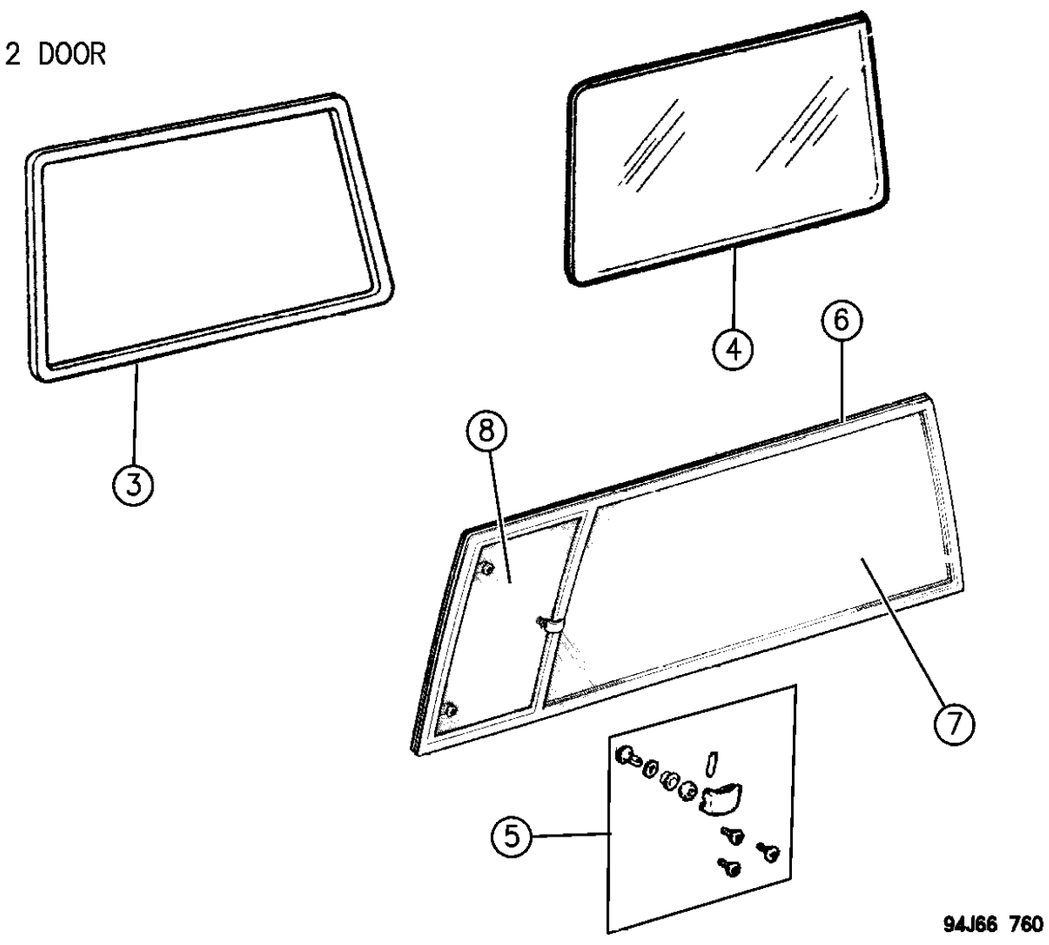

ITEM	PART NUMBER	QTY	BODY	MODEL	DESCRIPTION
1		1	74		SEAL, Quarter Window
	5500 7128				Right
	5502 5249				Left
2		1	74		GLASS, Quarter
	5500 0700-1				Tinted
					Privacy
	5501 8654-5				Up to 5-27-94
	5517 4998-9				After 5-27-94, 1995,96
3	5500 7130-1	1	72		SEAL, Quarter Window
4	5500 0186-7	1	72		GLASS, Quarter, Tinted
5	4773 489	1	72		LATCH, Package
6	5513 4642-3	1	72		GLASS, Quarter and Vent, Privacy
7	4713 872-3	1	72		GLASS, Quarter, Privacy
8	5513 4644-5	1	72		GLASS, Quarter Vent, Privacy
	4762 241	2			HINGE KIT, Quarter Window Vent ***

MODEL CODES:

72=2 DR Wagon
74=4 DR Wagon
77=Open Body 93" Whlbase
78=Open Body 103" Whlbase - Export
T=2WD
J,N=4WD
U=4WD (RHD)

BODY STYLES:

YJ=Wrangler (4X4) "S"
Weangler (4X4) SE
Wrangler (4X4) Sahara
Wrangler (4X4) Renegade

XJ=Cherokee SE
Cherokee Sport
Cherokee Country

ZJ=Grand Cherokee SE
Grand Cherokee Laredo
Grand Cherolee Limited
ZG=Grand Cherokee European

Y1=Wrangler
X1=Cherokee
Z1=Grand Cherokee
KDX=Vehicles

AR = Use as Required - = Non Illustrated Part P.A.R. = Paint as Required

PANELS, BODY SIDE CHEROKEE XJ, 2 DOOR
Figure SXJ-820

SXJ-820A

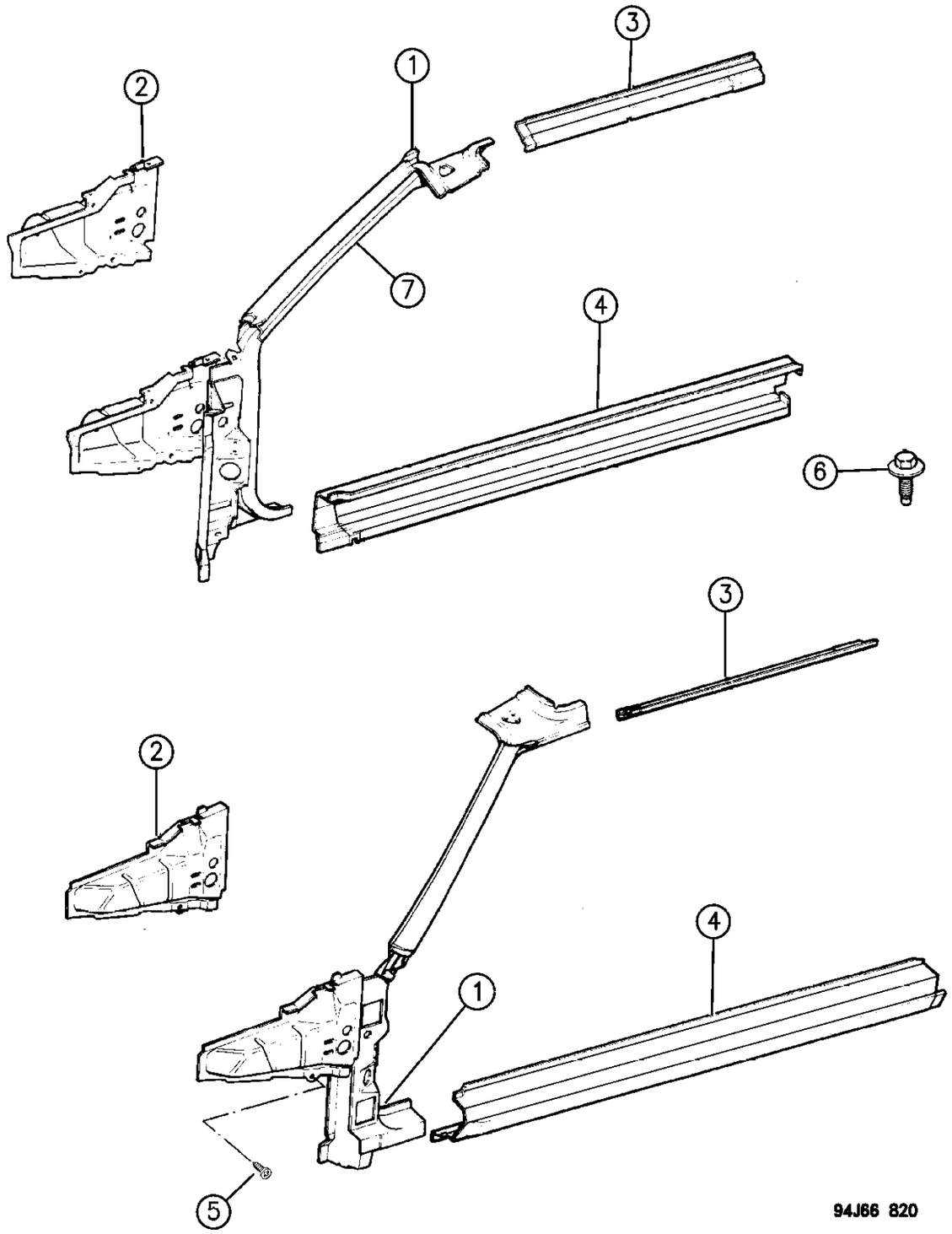

ITEM	PART NUMBER	QTY	BODY	MODEL	DESCRIPTION
1					PILLAR, Hinge ***
	5534 5810-1	1			
	5534 5812-3	1			KDX, 2.5l.w/Fuel Injection Only, All 6-Cyl.
2		1			PANEL, Cowl Side
					Right
	5534 5338				1994,95,96 Up to 8-10-95
	5523 5484				1996, After 8-10-95
					Left
	5500 0849				1994,95,96, Up to 8-10-95
	5523 5485				1996, After 8-10-95
3	5534 5844-5	1			RAIL, Roof Side
4	5523 5088-9	1			PANEL, Rocker
					SEAL, Rocker Panel
	5517 5029	2			1995
	5523 5478	2			1996
5	J400 7117	4			FASTENER, Cowl Panel
6	3420 1768	2			SCREW
7	5534 5832-3	1			REINFORCEMENT, Front Pillar Upper

MODEL CODES:

72=2 DR Wagon
74=4 DR Wagon
77=Open Body 93" Whlbase
78=Open Body 103" Whlbase - Export
T=2WD
J,N=4WD
U=4WD (RHD)

BODY STYLES:

YJ=Wrangler (4X4) "S"
Weangler (4X4) SE
Wrangler (4X4) Sahara
Wrangler (4X4) Renegade
XJ=Cherokee SE
Cherokee Sport
Cherokee Country
ZJ=Grand Cherokee SE
Grand Cherokee Laredo
Grand Cherolee Limited
ZG=Grand Cherokee European
Y1=Wrangler
X1=Cherokee
Z1=Grand Cherokee
KDX=Vehicles

AR = Use as Required - = Non Illustrated Part P.A.R. = Paint as Required

« RETURN TO GROUP INDEX

PANELS, BODY SIDE CHEROKEE, XJ, 4 DOOR
Figure SXJ-830

SXJ-830B

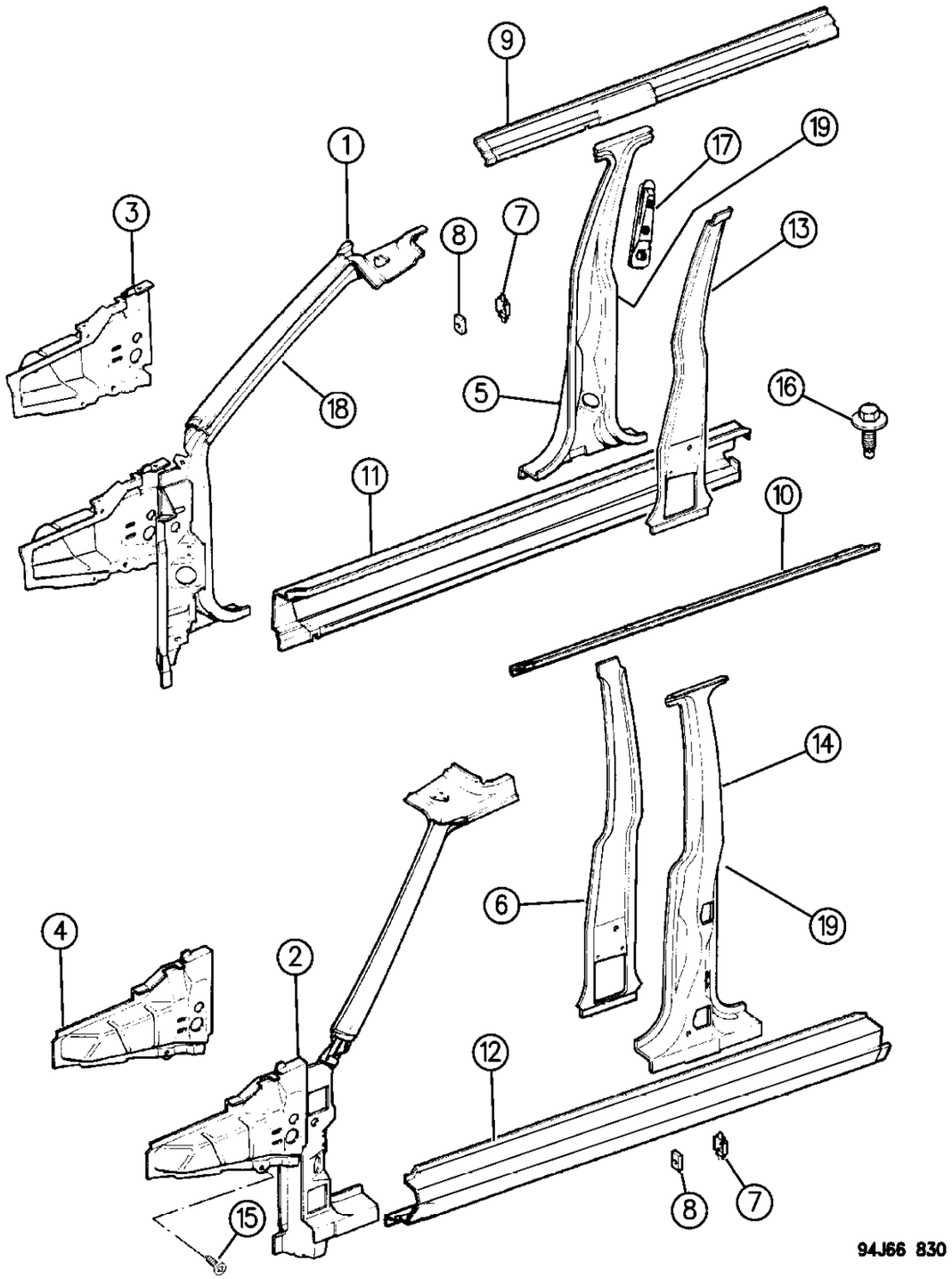

ITEM	PART NUMBER	QTY	BODY	MODEL	DESCRIPTION
1-2					PILLAR, Hinge
	5534 5810-1	1			
	5534 5812-3	1			KDX, 2.5l.w/Fuel Injection Only, All 6-Cyl.
	5534 6044-5				China, 2.5L w/Gas & Carb.
	5534 6046	1			REINFORCEMENT, Front Pillar & Cowl Outer, Right, (Also Serviced in 55346044)
	5534 5340-1	1			REINFORCEMENT, Cowl Side
3	5534 5338	1			PANEL, Cowl Side, Right
4	5500 0849	1			PANEL, Cowl Side, Left
5					PANEL, Center Pillar, Right
	8350 7076	1			(Contains Pillar & Switch)
	5517 4516	1			Center Pillar, KDX
6	5534 4717	1			REINFORCEMENT, Left
7	5500 1284	2			RETAINER, Striker
8	5500 1286	2			PLATE, Striker
9-10	5534 5842-3	1			RAIL, Roof Side
11-12	5523 5090-1	1			PANEL, Rocker
-					SEAL, Rocker Panel, Front Door, EXPORT
	5517 5027	2			1995
	5523 5479	2			1996
-					SEAL, Rocker Panel, Rear Door
	5517 5028	2			1995
	5523 5480	2			1996
13	5534 4716	1			REINFORCEMENT, Right
14					PANEL, Center Pillar, Left
	8350 7077	1			(Contains Pillar & Switch)
	5517 4517	1			Center Pillar, KDX
15	J400 7117	4			FASTENER, Cowl Panel
16	3420 1768	6			SCREW
17	5502 9144	1			PLATE, Tapping, Shoulder Belt
18	5534 5832-3	1			REINFORCEMENT, Front Pillar Upper
-	5534 6266-7	1			BRACKET ASSY., Retractor Mounting, KDX- Argintina, China, Egypt, Malaysia, Venezuela and Indonesia ***

MODEL CODES:

72=2 DR Wagon
74=4 DR Wagon
77=Open Body 93" Whlbase
78=Open Body 103" Whlbase - Export
T=2WD
J,N=4WD
U=4WD (RHD)

BODY STYLES:

YJ=Wrangler (4X4) "S"
Weangler (4X4) SE
Wrangler (4X4) Sahara
Wrangler (4X4) Renegade
XJ=Cherokee SE
Cherokee Sport
Cherokee Country
ZJ=Grand Cherokee SE
Grand Cherokee Laredo
Grand Cherolee Limited
ZG=Grand Cherokee European
Y1=Wrangler
X1=Cherokee
Z1=Grand Cherokee
KDX=Vehicles

AR = Use as Required - = Non Illustrated Part P.A.R. = Paint as Required

« RETURN TO GROUP INDEX

PANELS, REAR QUARTER CHEROKEE XJ, 2 DOOR
Figure SXJ-920

SXJ-920C

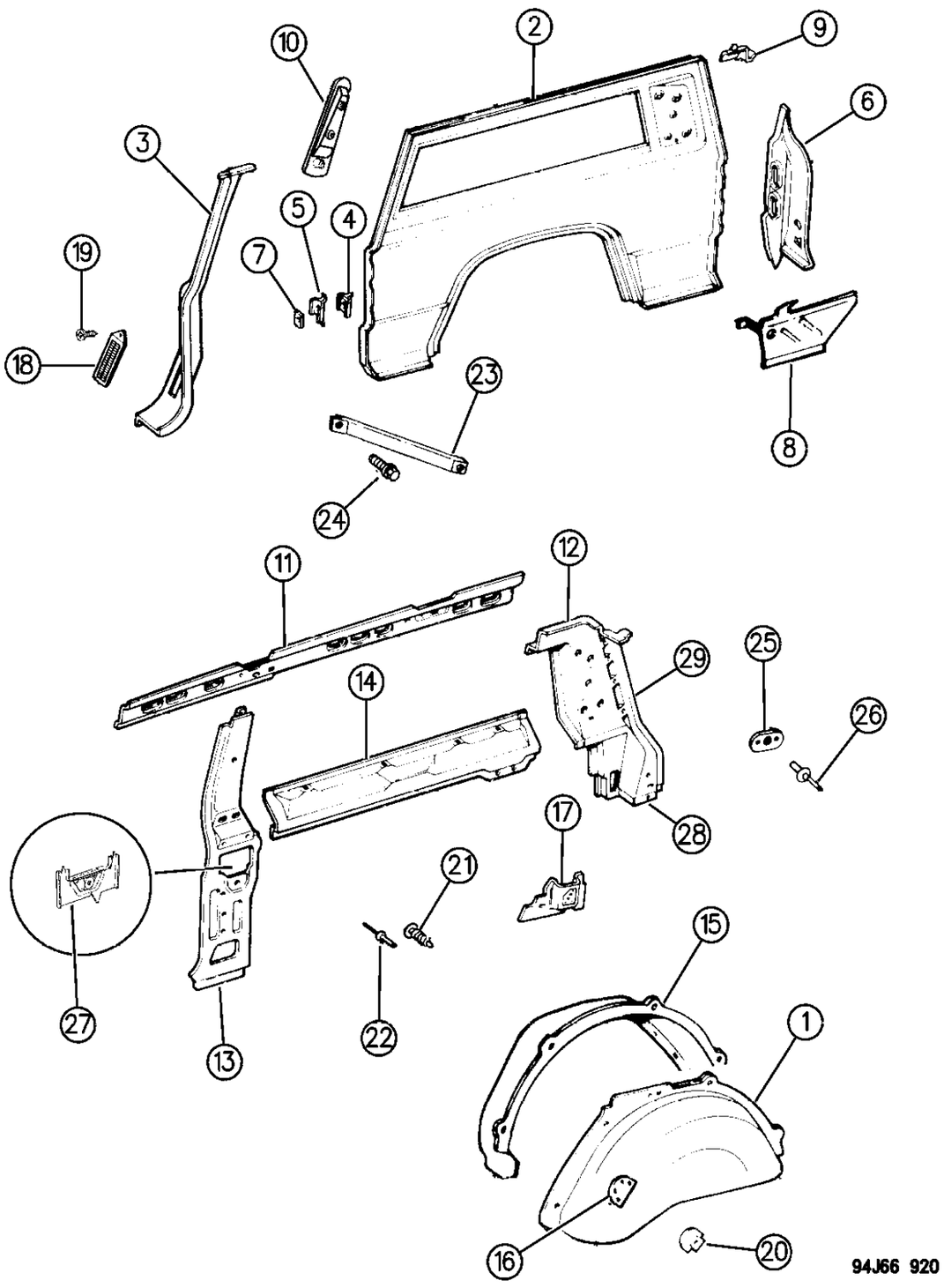

ITEM	PART NUMBER	QTY	BODY	MODEL	DESCRIPTION
1		1			PANEL, Wheelhouse, Inner
	5502 7694				Right
	5500 0147				Left
2					PANEL, Rear Quarter
	5502 5790-1	1			1994,95
	4864 370-1	1			1996
3	5500 0866-7	1			PILLAR, Lock
4	5700 0576	2			PLATE, ASSEMBLY, Striker
5	5500 1284	2			RETAINER, Striker
6	5534 6270-1				PANEL, Taillamp
7	5500 1286	2			PLATE, Striker
8					PANEL, Side Extension
	5534 5164-5	1			1994,95,96, Up to 12-11-95
	5523 5534-5	1			1996, After 12-11-95
9	5500 1014-5	1			EXTENSION, Panel
10	5502 9144	2			PLATE , Tapping, Shoulder Belt
11		1			RAIL, Roof Side
	5534 6251	1			Right
	5534 5188				Right, KDX
	5534 6253				Left
-	4490 111	1			TAPPING PLATE ***
12	4763 100-1	1			PILLAR, Lift Door Opening
13	5534 5808-9	1			REINFORCEMENT
14	5534 4582-3	1			RAIL, Rear Quarter Belt
15	5500 0144-5	1			PANEL, Wheelhouse Outer
16	5502 6758	2			DOUBLER, Rear Wheelhouse Inner To Support Bracket, Rear Seat Hinge
17	5500 2120-1	1			BRACKET, Seat Latch
18	5500 1980	2			EXHAUSTER, Air ***
19	1150 1609	2			SCREW
20	5500 1231	1			BRACKET, Hinge Pivot
21	J400 7117	2			FASTENER
22	3420 1032	8			RIVET
23	5500 6218	2			BRACE, Door Lock Striker
24	3420 2036	4			SCREW
25					PLATE, Shoulder Harness, (Serviced in Roof Side Rail)
26	3420 1353	4			RIVET
27	5534 5291	2			BRACKET ASSY., Retractor Mounting ***
28	5534 5162-3	1			PILLAR, Liftdoor Opening, Lower, (Also Serviced in Item #12) ***
29	5502 9604-5	1			PILLAR, Liftdoor Opening Upper, (Also Serviced in Item #12) ***

MODEL CODES:

72=2 DR Wagon
74=4 DR Wagon
77=Open Body 93" Whlbase
78=Open Body 103" Whlbase - Export
T=2WD
J,N=4WD
U=4WD (RHD)

BODY STYLES:

YJ=Wrangler (4X4) "S"
Weangler (4X4) SE
Wrangler (4X4) Sahara
Wrangler (4X4) Renegade
XJ=Cherokee SE
Cherokee Sport
Cherokee Country
ZJ=Grand Cherokee SE
Grand Cherokee Laredo
Grand Cherolee Limited
ZG=Grand Cherokee European
Y1=Wrangler
X1=Cherokee
Z1=Grand Cherokee
KDX=Vehicles

AR = Use as Required - = Non Illustrated Part P.A.R. = Paint as Required

« RETURN TO GROUP INDEX

FUEL FILLER HOUSING & DOOR CHEROKEE XJ
Figure SXJ-930

SXJ-930

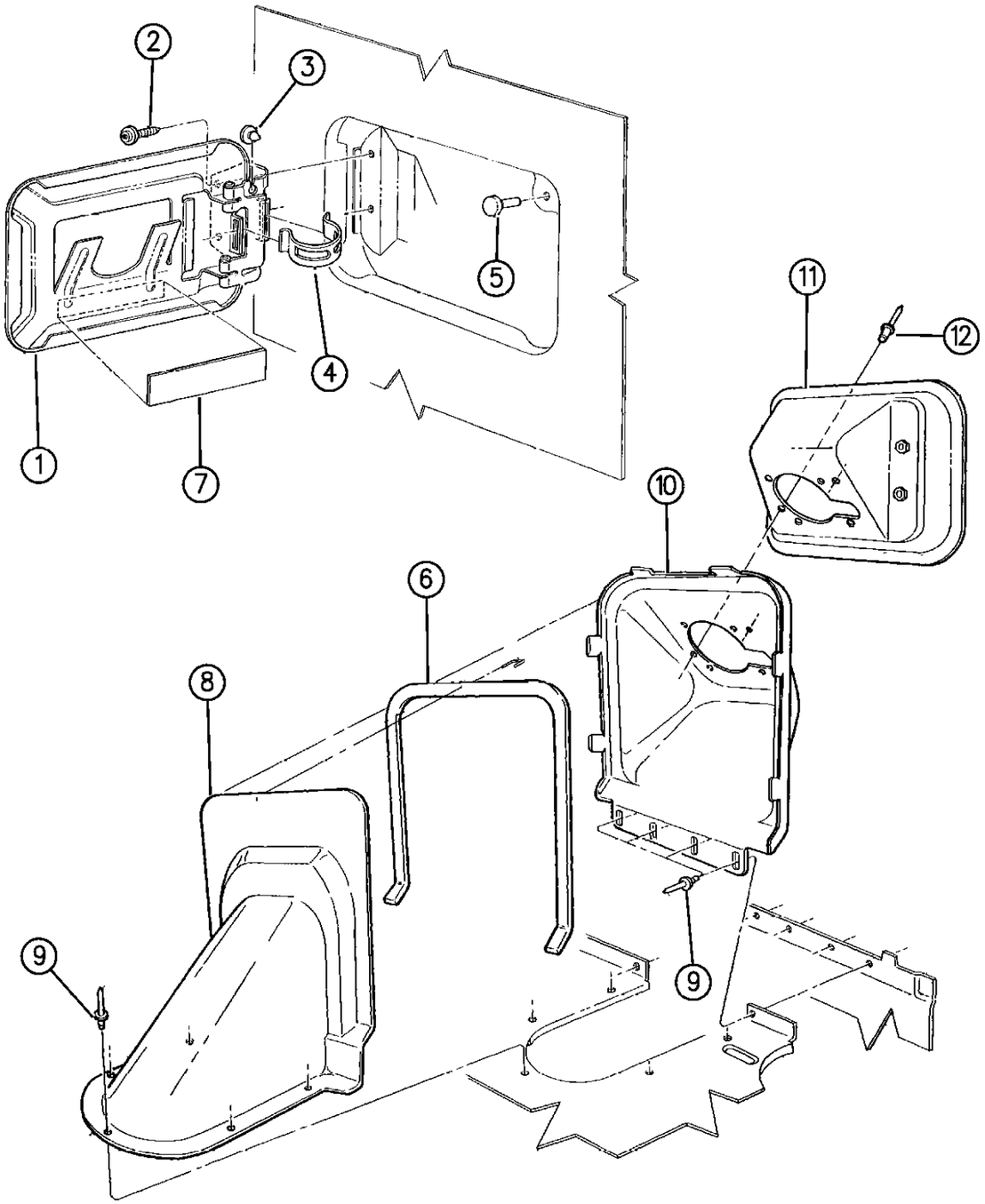

ITEM	PART NUMBER	QTY	BODY	MODEL	DESCRIPTION
1	5500 0819	1			DOOR, Fuel Filler
2	3420 2399	2			SCREW
3	J063 5787	1			BUMPER, Door
4	5500 4206	1			SPRING, Door
5	3420 1812	1			BUMPER
6	5534 5178	1			SEAL, Fuel Filler Flange
7		1			LABEL
					UNLEADED FUEL ONLY
	J369 6393				English
	J369 6394				Bilingual
	J546 4900				DIESEL FUEL ONLY
8	5534 5623	1			HOUSING, Fuel Filler, (w/Seal)
9	3420 1208	AR			RIVET
10					EXTENSION, Fuel Filler Housing
	5534 5622	1			1994,95,96, Up to 10-23-95
	5523 5533	1			1996, After 10-23-95
11	5534 5621	1			HOUSING, Fuel Filler Support
12	3420 1684	2			RIVET

MODEL CODES:

72=2 DR Wagon
74=4 DR Wagon
77=Open Body 93" Whlbase
78=Open Body 103" Whlbase - Export
T=2WD
J,N=4WD
U=4WD (RHD)

BODY STYLES:

YJ=Wrangler (4X4) "S"
Weangler (4X4) SE
Wrangler (4X4) Sahara
Wrangler (4X4) Renegade
XJ=Cherokee SE
Cherokee Sport
Cherokee Country
ZJ=Grand Cherokee SE
Grand Cherokee Laredo
Grand Cherolee Limited
ZG=Grand Cherokee European
Y1=Wrangler
X1=Cherokee
Z1=Grand Cherokee
KDX=Vehicles

AR = Use as Required - = Non Illustrated Part P.A.R. = Paint as Required

« RETURN TO GROUP INDEX

PANELS, REAR QUARTER CHEROKEE, 4 DOOR, XJ
Figure SXJ-940

SXJ-940A

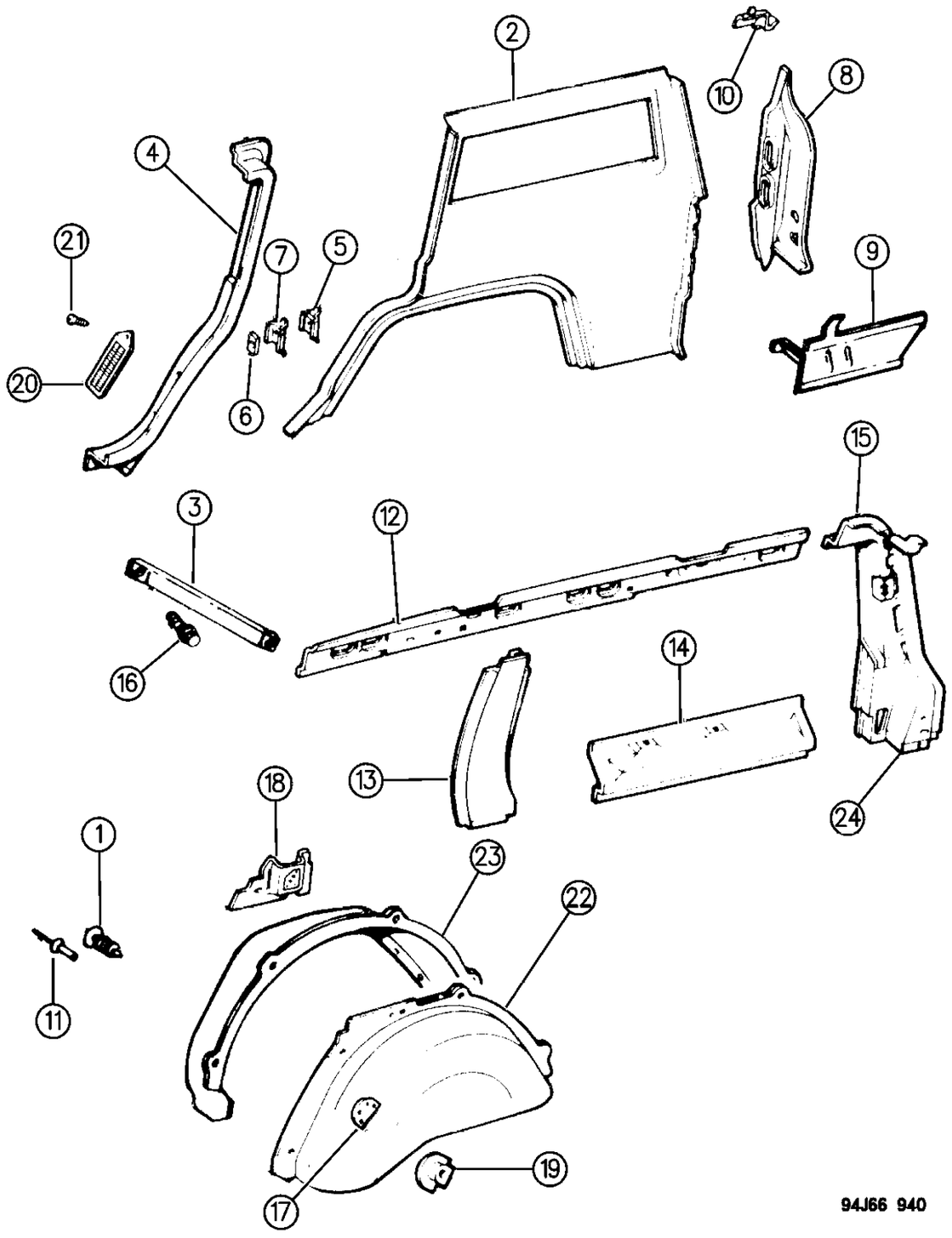

ITEM	PART NUMBER	QTY	BODY	MODEL	DESCRIPTION
1	J400 7117	2			FASTENER
2					PANEL, Rear Quarter
	5500 0094-5	1			1994,95
	4864 364-5	1			1996
3	5500 6218	2			BRACE, Door Lock Striker
4	5500 0844-5	1			PILLAR, Lock
5	5700 0160	2			PLATE, ASSEMBLY, Includes Item 6,7
6	5500 1286	2			PLATE, Striker
7	5500 1284	2			RETAINER, Striker
8	5534 6270-1				PANEL, Taillamp
9	5534 5164-5				PANEL, Side Extension
10	5500 1014-5	1			EXTENSION, Panel
11	3420 1032-3	8			RIVET
12					RAIL, Roof Side
	5534 6256	1			Right
	5534 6255				Left
-	4490 111	1			TAPPING PLATE ***
13	5500 0116-7	1			REINFORCEMENT
14	5502 9602-3	1			RAIL, Rear Quarter Belt
15	4762 092-3	1			PILLAR, Lift Door Opening
16	3420 2036	4			SCREW
17	5502 6758	2			DOUBLER, Rear Wheelhouse Inner To Support Bracket, Rear Seat Hinge
18	5500 2120-1	1			BRACKET, Seat Latch
19	5500 1231	1			BRACKET, Rear Seat Hinge Pivot
20	5500 1980	2			EXHAUSTER, Air ***
21	1150 1609	2			SCREW
22	5500 0146-7	1			PANEL, Wheelhouse Inner
23	5500 0144-5	1			PANEL, Wheelhouse Outer
24	5534 5162-3	1			PILLAR, Liftdoor Opening, Lower, (Included in Item #15) ***

MODEL CODES:

72=2 DR Wagon
74=4 DR Wagon
77=Open Body 93" Whlbase
78=Open Body 103" Whlbase - Export
T=2WD
J,N=4WD
U=4WD (RHD)

BODY STYLES:

YJ=Wrangler (4X4) "S"
Weangler (4X4) SE
Wrangler (4X4) Sahara
Wrangler (4X4) Renegade
XJ=Cherokee SE
Cherokee Sport
Cherokee Country
ZJ=Grand Cherokee SE
Grand Cherokee Laredo
Grand Cherolee Limited
ZG=Grand Cherokee European
Y1=Wrangler
X1=Cherokee
Z1=Grand Cherokee
KDX=Vehicles

AR = Use as Required - = Non Illustrated Part P.A.R. = Paint as Required

« RETURN TO GROUP INDEX

APPLIQUES, REAR QUARTER PANEL CHEROKEE XJ
Figure SXJ-950

SXJ-950

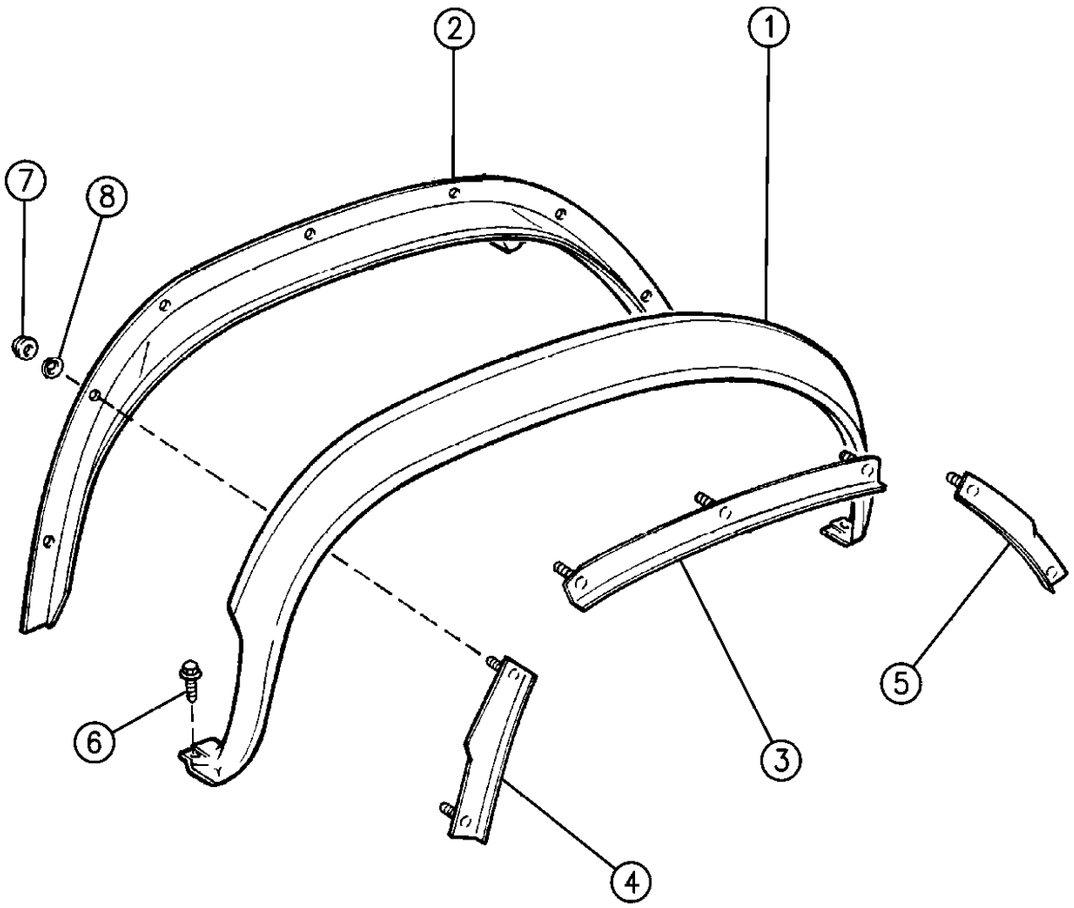

94J66 950

ITEM	PART NUMBER	QTY	BODY	MODEL	DESCRIPTION
1					APPLIQUE, Rear Quarter, P.A.R.
					Flat Black, w/Vinyl Mouldings, P.A.R.
	5AG24-5 JX9	1			1994,95
	5EU62-3 SX9	1			1996
	5AG18-9 JX8	1			Gloss Black, w/o Vinyl Mouldings, P.A.R.
2					PANEL, Inner Protective
	5500 4032-3	1			1994,95
	5515 5290-1	1			1996
3	5500 3240	2			RETAINER, Applique
4	5500 3238-9	1			RETAINER, Applique
5	5500 3242-3	1			RETAINER, Applique
6	1150 2843	4			SCREW
7	J420 0408	AR			NUT
8	6100 839	6			NUT

MODEL CODES:

72=2 DR Wagon
74=4 DR Wagon
77=Open Body 93" Whlbase
78=Open Body 103" Whlbase - Export
T=2WD
J,N=4WD
U=4WD (RHD)

BODY STYLES:

YJ=Wrangler (4X4) "S"
Weangler (4X4) SE
Wrangler (4X4) Sahara
Wrangler (4X4) Renegade
XJ=Cherokee SE
Cherokee Sport
Cherokee Country
ZJ=Grand Cherokee SE
Grand Cherokee Laredo
Grand Cherolee Limited
ZG=Grand Cherokee European
Y1=Wrangler
X1=Cherokee
Z1=Grand Cherokee
KDX=Vehicles

AR = Use as Required - = Non Illustrated Part P.A.R. = Paint as Required

« RETURN TO GROUP INDEX

ROOF PANEL CHEROKEE XJ
Figure SXJ-1175

SXJ-1175

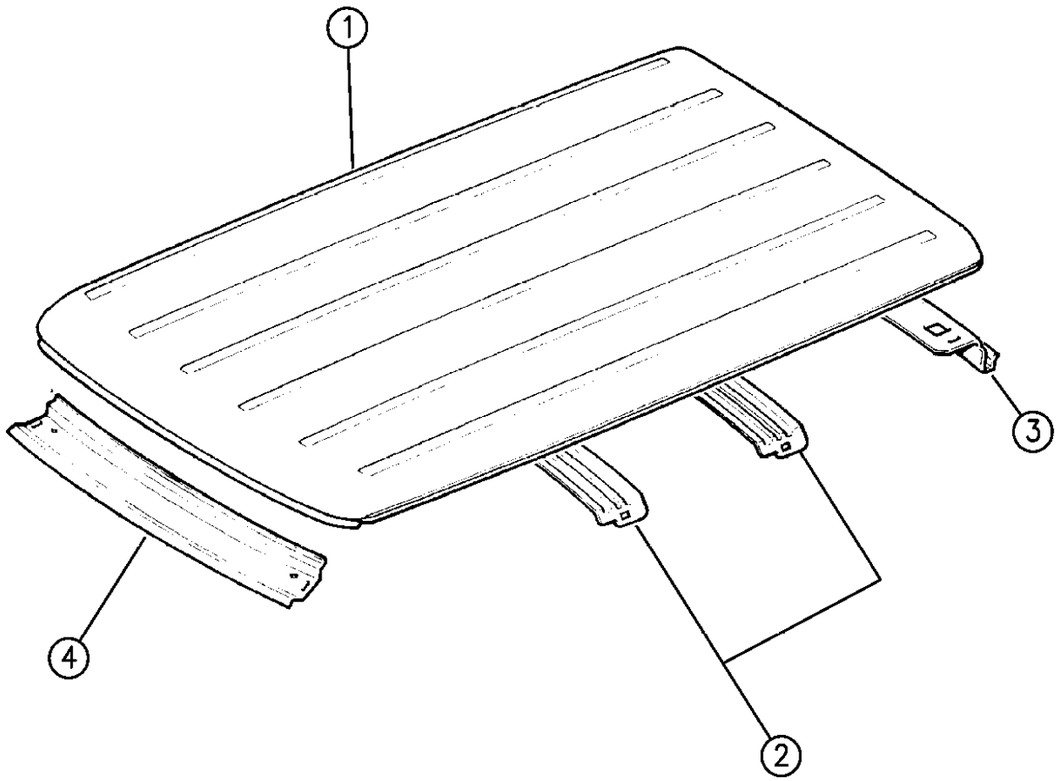

94J66 1175

ITEM	PART NUMBER	QTY	BODY	MODEL	DESCRIPTION
1		1			PANEL, Roof
	5507 4541				w/o Luggage Rack
	5525 4639				w/Luggage Rack
2	5500 0138	2			SUPPORT, Roof
3	5700 2012	1			HEADER, Door ***
4					HEADER, Front ***
	5534 5802	1			1994,95
	5523 5339	1			1996

MODEL CODES:

72=2 DR Wagon
74=4 DR Wagon
77=Open Body 93" Whlbase
78=Open Body 103" Whlbase - Export
T=2WD
J,N=4WD
U=4WD (RHD)

BODY STYLES:

YJ=Wrangler (4X4) "S"
Weangler (4X4) SE
Wrangler (4X4) Sahara
Wrangler (4X4) Renegade
XJ=Cherokee SE
Cherokee Sport
Cherokee Country
ZJ=Grand Cherokee SE
Grand Cherokee Laredo
Grand Cherolee Limited
ZG=Grand Cherokee European
Y1=Wrangler
X1=Cherokee
Z1=Grand Cherokee
KDX=Vehicles

AR = Use as Required - = Non Illustrated Part P.A.R. = Paint as Required

« RETURN TO GROUP INDEX

LIFT DOOR, LATCH AND HINGES CHEROKEE XJ
Figure SXJ-1340

SXJ-1340B

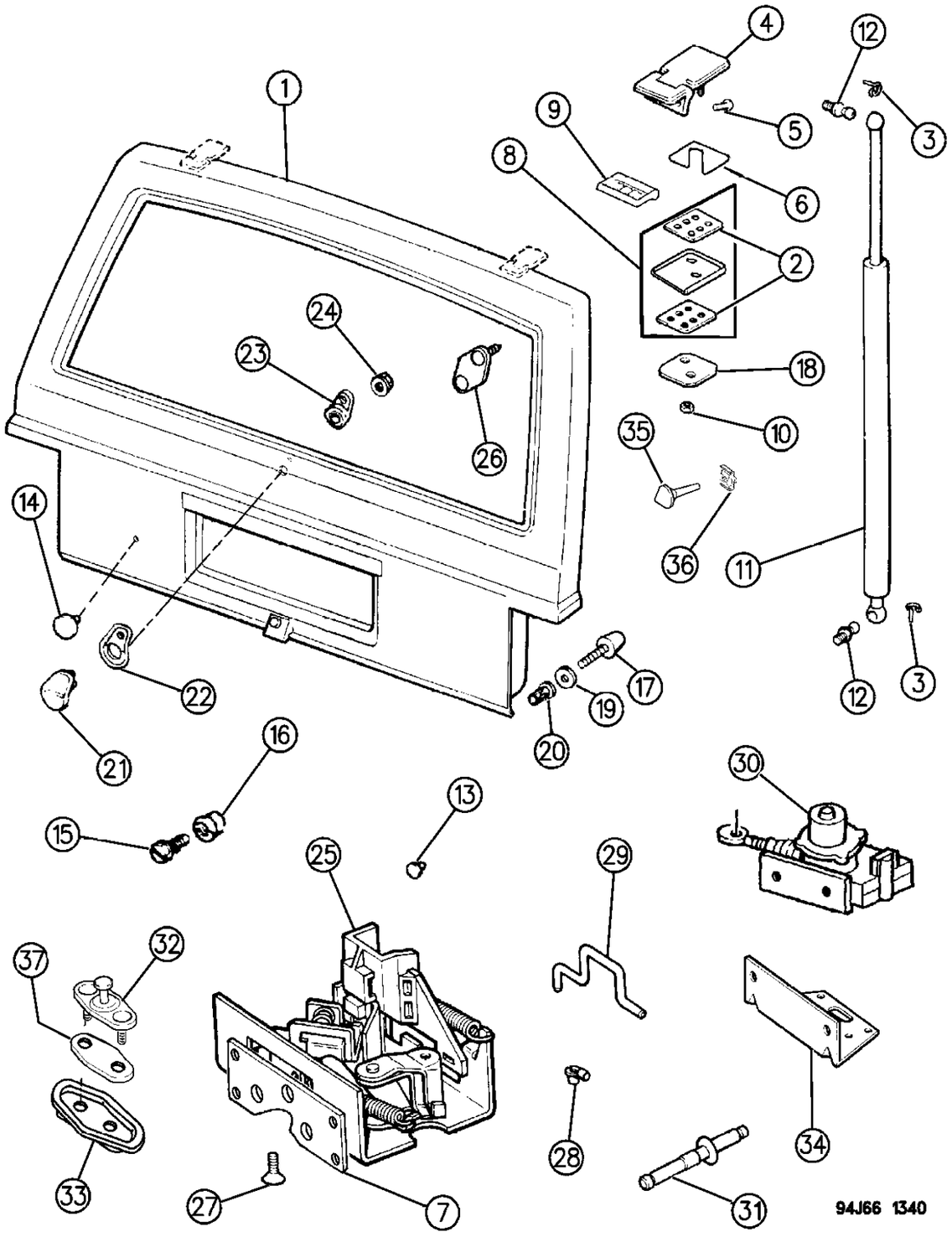

ITEM	PART NUMBER	QTY	BODY	MODEL	DESCRIPTION
1					DOOR, Lift
	5534 5947	1			1994, 1995 Up to 2-1-95
	5523 5324	1			1995,96, After 2-1-95
2	5507 4538	4			SEAL, Hinge
3					CLIP
	J367 9830	4			1994,95
	5529 5745	4			1996
4	5507 5294-5	1			HINGE, Lift Door
5	3420 1925	4			SCREW
6	5507 4539	2			SHIM
7	5501 5398	1			PLATE, Liftgate Latch
8	5507 4536-7	1			GASKET
9	5500 1992-3	1			GASKET, Hinge
10	6500 284	4			NUT, Washer
11					SUPPORT, Lift Door
	5502 7180	2			1994
	5523 5214	2			1995,96
12	5507 5204	4			STUD, Ball
13	J400 4227	2			BUMPER, License, w/o Outside Spare Tire Mount
14	J323 4895	2			BUMPER, License, w/Outside Spare Tire Mount
15	6502 407	2			SCREW, License Plate Mounting
16	3420 1672	2			NUT, License Plate Mounting
17	5500 5608	2			STOP, Lift Door
18	5507 4953	2			SHIM
19	5500 6770	2			SHIM
20	3420 1977	2			NUT
21	5500 6292	1			PLUG
22	5500 6293	1			GASKET
23	5500 6294	1			SPACER
24	J400 3084	1			NUT
25		1			LATCH, Lift Door
					w/ Cargo Lamp Switch
	5507 6351				1994,95, Up to 5-15-95
	5523 5390				1995,96, After 5-15-95
					w/o Cargo Lamp Switch
	5507 5905				1994,95, Up to 1-19-95
	5507 6350				1995, After 1-19-95, Up to 5-15-95
	5523 5389				1995,96, After 5-15-95
26	5515 4662	1			PLUG, Liftgate w/o Wiper
27					SCREW
	3420 1996	3			1994, Up to 2-24-94
	6503 729	3			1994 After 2-24-94, 1995,96

MODEL CODES:

72=2 DR Wagon
74=4 DR Wagon
77=Open Body 93" Whlbase
78=Open Body 103" Whlbase - Export
T=2WD
J,N=4WD
U=4WD (RHD)

BODY STYLES:

YJ=Wrangler (4X4) "S"
Weangler (4X4) SE
Wrangler (4X4) Sahara
Wrangler (4X4) Renegade
XJ=Cherokee SE
Cherokee Sport
Cherokee Country
ZJ=Grand Cherokee SE
Grand Cherokee Laredo
Grand Cherolee Limited
ZG=Grand Cherokee European
Y1=Wrangler
X1=Cherokee
Z1=Grand Cherokee
KDX=Vehicles

AR = Use as Required - = Non Illustrated Part P.A.R. = Paint as Required

LIFT DOOR, LATCH AND HINGES CHEROKEE XJ
Figure SXJ-1340

SXJ-1340B

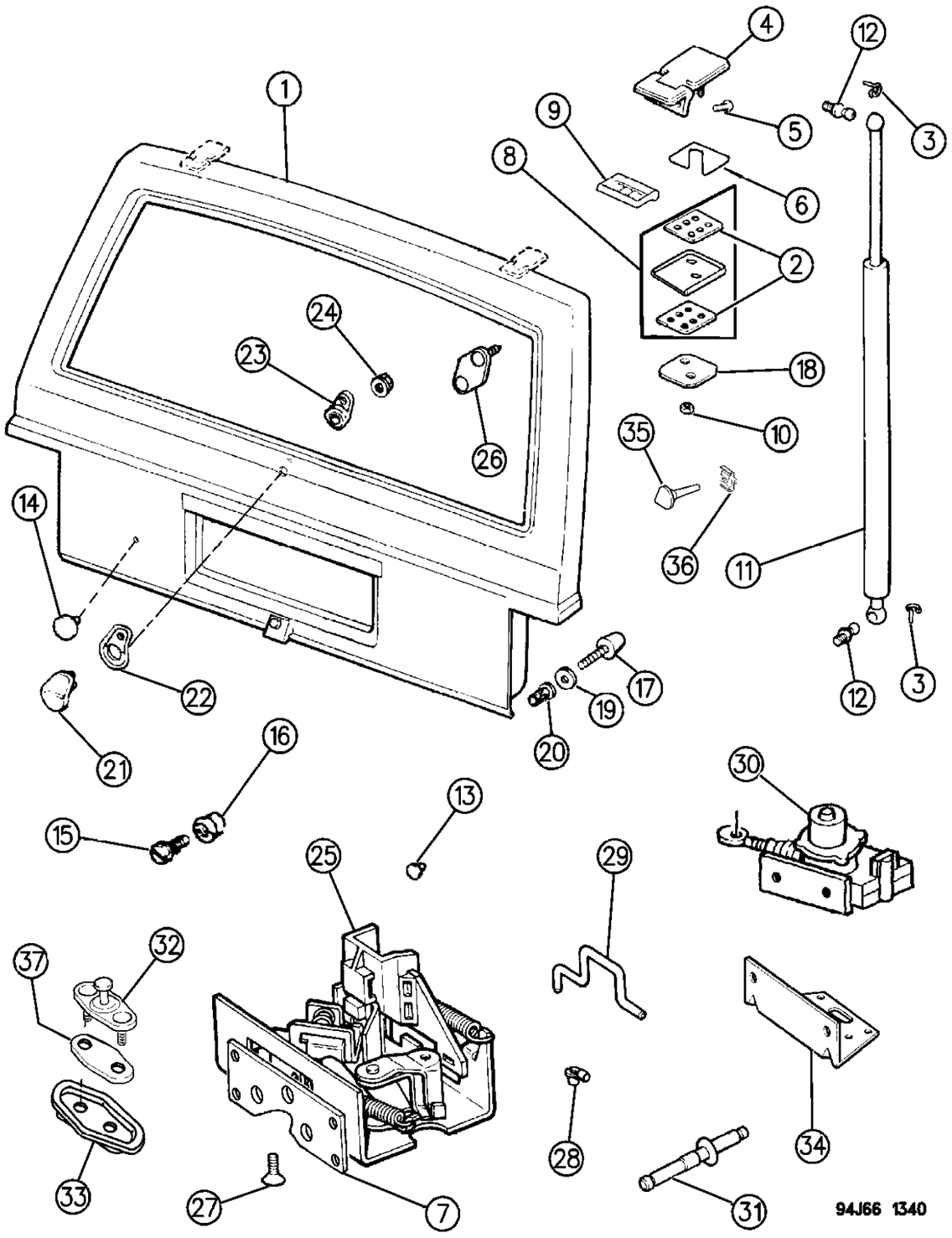

ITEM	PART NUMBER	QTY	BODY	MODEL	DESCRIPTION
28	J400 3673	1			RETAINER
29	5500 0730	1			ROD, Lock Actuator
30	J813 4627	1			ACTUATOR, Power Lock
31	3420 1353	2			RIVET
32	5507 4641				STRIKER, Latch
	4713 437	1			STRIKER, Pkg. (Contains Striker, Tapping Plate, Nut & Washer)
33	5500 4352	1			RETAINER
34	J371 9474	1			BRACKET, Actuator
35	5534 5762	2			BUMPER, Liftgate (Attached to Body)
36	6034 937	2			NUTSERT, (For Bumper Attached to Body) ***
37	5500 2756	1			SHIM, Liftgate Latch ***

MODEL CODES:

72=2 DR Wagon
74=4 DR Wagon
77=Open Body 93" Whlbase
78=Open Body 103" Whlbase - Export
T=2WD
J,N=4WD
U=4WD (RHD)

BODY STYLES:

YJ=Wrangler (4X4) "S"
Weangler (4X4) SE
Wrangler (4X4) Sahara
Wrangler (4X4) Renegade
XJ=Cherokee SE
Cherokee Sport
Cherokee Country
ZJ=Grand Cherokee SE
Grand Cherokee Laredo
Grand Cherolee Limited
ZG=Grand Cherokee European
Y1=Wrangler
X1=Cherokee
Z1=Grand Cherokee
KDX=Vehicles

AR = Use as Required - = Non Illustrated Part P.A.R. = Paint as Required

RACK, ROOF LUGGAGE CHEROKEE, XJ
Figure SXJ-1620

SXJ-1620

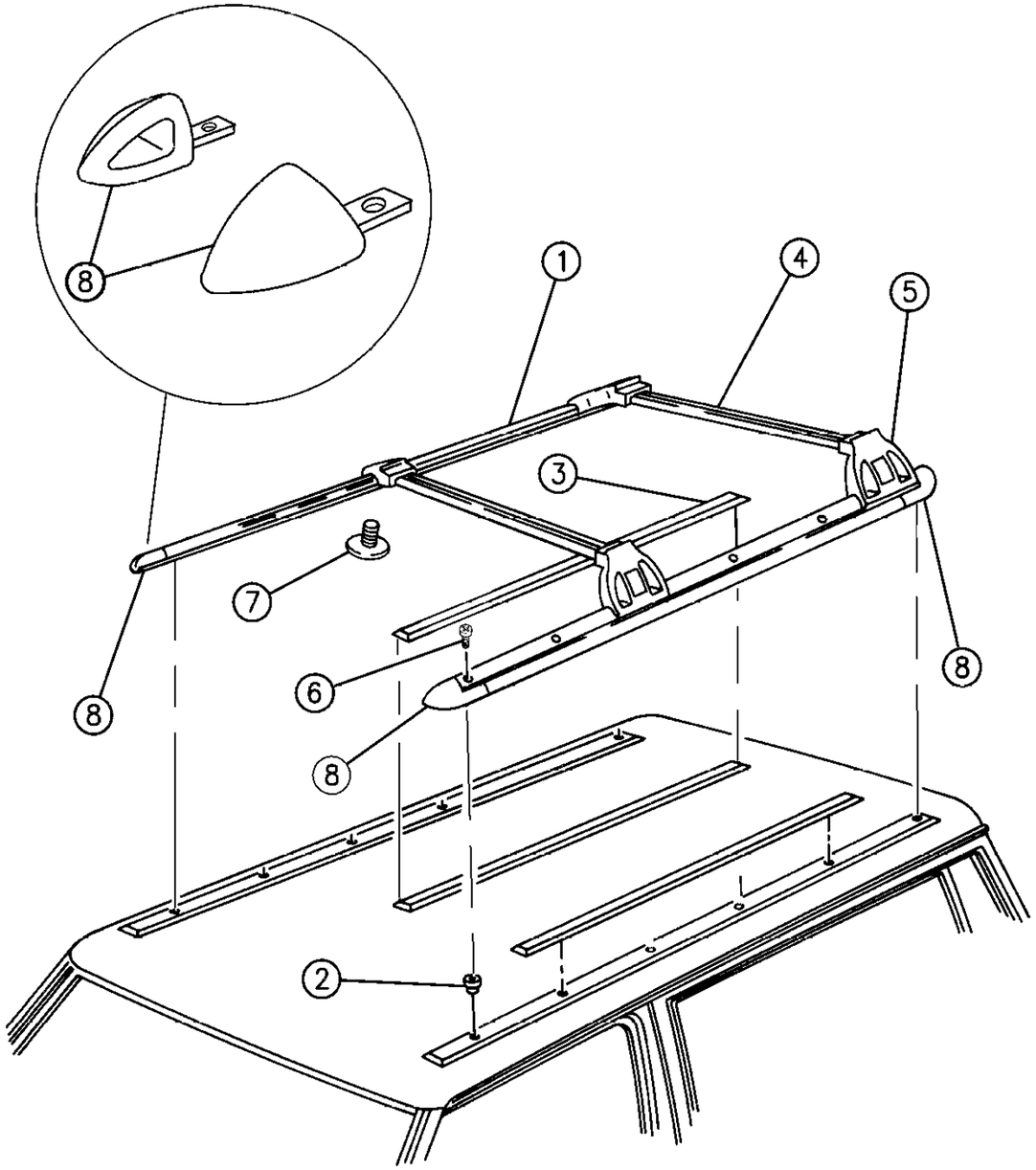

ITEM	PART NUMBER	QTY	BODY	MODEL	DESCRIPTION
1	5507 5115	2			RAIL, Slide
2					NUT
	6502 751	12			1994,95,96, Up to 12-4-95
	6503 910	12			1996, After 12-4-95
3	5507 5106	1			STRIP, Skid
4					RAIL, Cross
	5502 5809	2			1994,95
	5523 5239	2			1996
5	5507 4633	4			STANCHION, Assy.
6	6502 667	12			SCREW
7	5507 4653	4			SCREW, Crossrail to Stanchion
8	5507 5084-5	2			END CAP

MODEL CODES:

72=2 DR Wagon
74=4 DR Wagon
77=Open Body 93" Whlbase
78=Open Body 103" Whlbase - Export
T=2WD
J,N=4WD
U=4WD (RHD)

BODY STYLES:

YJ=Wrangler (4X4) "S"
Weangler (4X4) SE
Wrangler (4X4) Sahara
Wrangler (4X4) Renegade
XJ=Cherokee SE
Cherokee Sport
Cherokee Country
ZJ=Grand Cherokee SE
Grand Cherokee Laredo
Grand Cherolee Limited
ZG=Grand Cherokee European
Y1=Wrangler
X1=Cherokee
Z1=Grand Cherokee
KDX=Vehicles

AR = Use as Required - = Non Illustrated Part P.A.R. = Paint as Required

« RETURN TO GROUP INDEX

SAGIPARTS

GROUP-SZJ

BODY SHEET METAL, GLASS EXCEPT DOORS

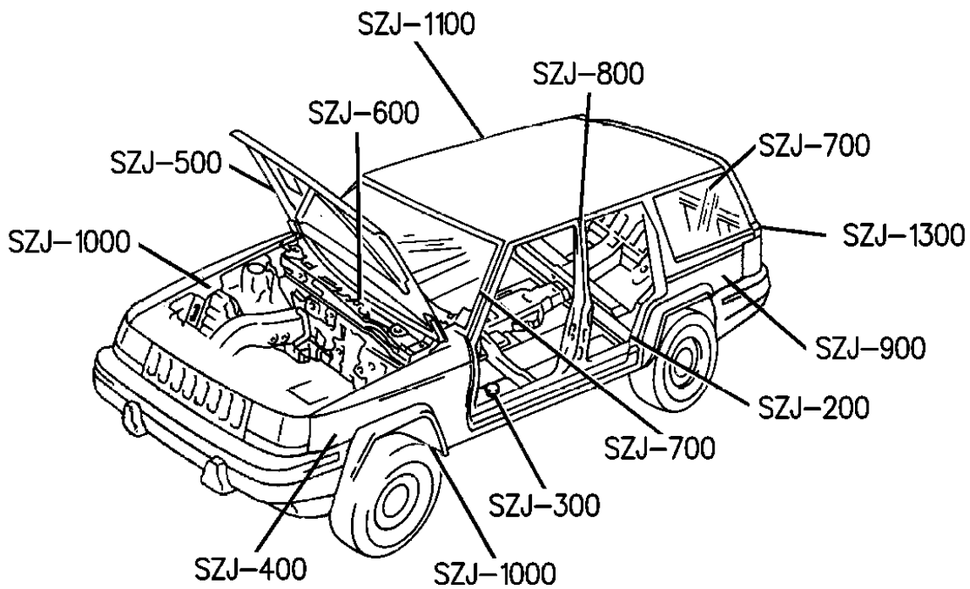

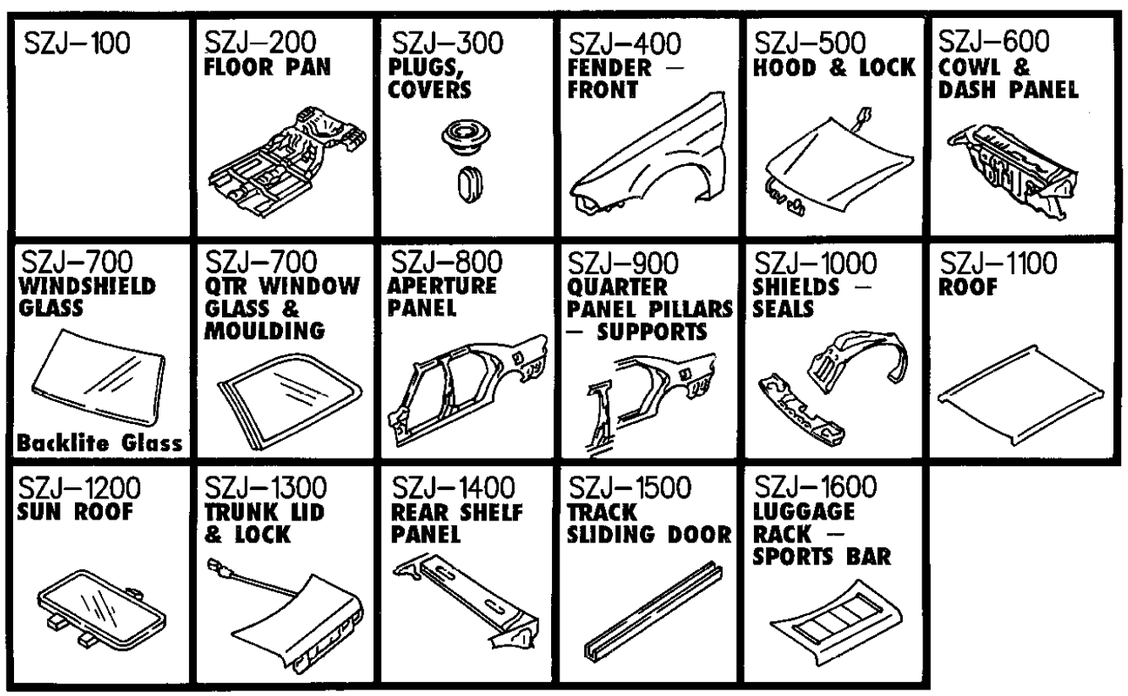

GROUP SZJ - SHEET METAL - BODY GRAND CHEROKEE

ILLUSTRATION TITLE	GROUP-FIG. NO.
FLOOR PAN	
PANS, FLOOR GRAND CHEEROKEE, ZJ	Fig. SZJ-250
FRONT END SKID PLATES GRAND CHEROKEE, ZJ	Fig. SZJ-260
PLUGS	
PLUGS, BODY GRAND CHEROKEE, ZJ	Fig. SZJ-320
FENDERS, FRONT GRAND CHEROKEE, ZJ	Fig. SZJ-450
PANELS, FRONT END INNER AND WHEELHOUSE GRAND CHEROKEE, ZJ	Fig. SZJ-460
HOOD & HOOD RELEASE	
HOOD, LATCH AND HINGES GRAND CHEROKEE, ZJ	Fig. SZJ-530
COWL AND DASH PANEL	
PANELS, COWL AND DASH GRAND CHEROKEE, ZJ	Fig. SZJ-640
GLASS AND MIRRORS	
GLASS, WINDSHIELD, QUARTER AND REAR VIEW MIRROR GRAND CHEROKEE, ZJ	Fig. SZJ-770
GLASS, BACKLITE GRAND CHEROKEE, ZJ	Fig. SZJ-775
APPERTURE PANELS	
PANELS, BODY SIDE GRAND CHEROKEE, ZJ	Fig. SZJ-840
QUARTER PANELS, PILLAR AND SUPPORTS	
PANELS, REAR QUARTER GRAND CHEROKEE, ZJ	Fig. SZJ-960
ROOF PANELS AND TOPS	
PANELS, ROOF GRAND CHEROKEE, ZJ	Fig. SZJ-1180
SUN ROOFS	
SUNROOF COMPONENT PARTS GRAND CHEROKEE, ZJ	Fig. SZJ-1210
TAILGATE AND LIFT DOOR	
LIFT DOOR, LATCH AND HINGES GRAND CHEROKEE, ZJ	Fig. SZJ-1350
SPORT BAR AND LUGGAGE RACK	
ROOF RACK GRAND CHEROKEE, ZJ	Fig. SZJ-1630

PANS, FLOOR GRAND CHEEROKEE, ZJ
Figure SZJ-250

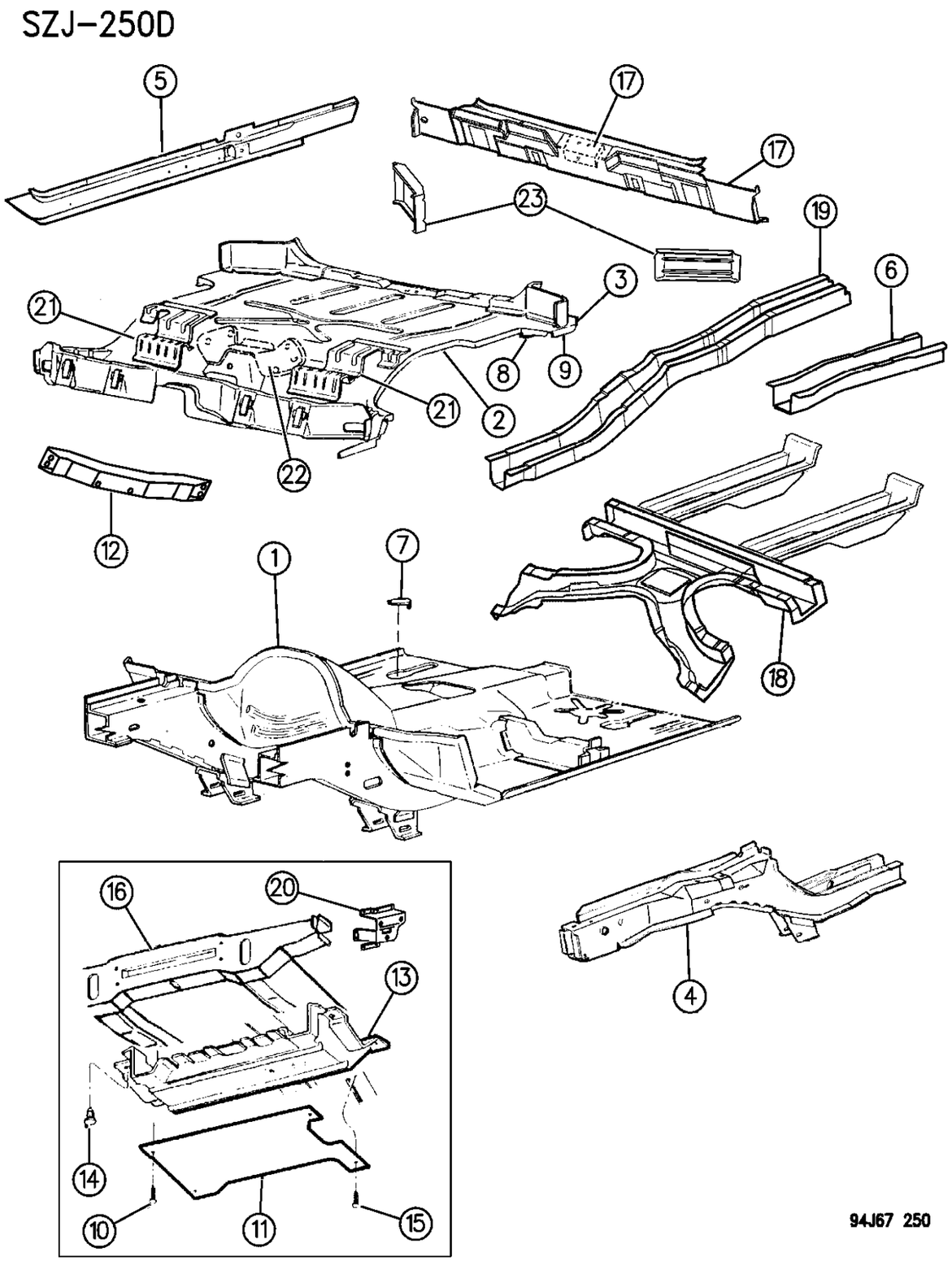

ITEM	PART NUMBER	QTY	BODY	MODEL	DESCRIPTION
1					PAN, Front Floor ***
	5525 5228	1			1994,95
	5525 5062	1	ZJ		1996
	5535 5655	1	ZG		1996
	5535 5720	1	ZG		1996 6 Cyl. Eng. (RHD)
	5535 5721	1	ZG		1996 Diesel Eng. (RHD)
-	5525 5292	1	ZG		REINFORCEMENT, Tunnel Front Floor
2					PAN, Rear Floor ***
	4762 903	1			1994
	4796 691	1			1995
	4864 264	1			1996
3	5503 1440-1	1			GUSSET, Liftgate Opening to Floor
4					SILL, Front ***
	4746 172-3	1	ZJ		1994-96
	4746 172-3	1	ZG		1994,95
	4856 830-1	1	ZG		1996 (RHD)
	5529 6046-7	1	ZG		REINFORCEMENT, Front Sill
5					SILL, Side ***
	5523 4744-5	1			1994,95
	5529 5740-1	1			1996
6	5523 4743	2			SILL, Center
7	4586 055	18			PLUG, Floor Pan
8	5600 6276	2			PLUG
9	5507 5527	2			PLUG, w/Valve
10		4			RETAINER, (Not Serviced)
11	5534 6021	1			SHIELD, Underbody Splash
12					CROSSMEMBER, Trans. Support
	5205 8656	1			1994-95
	5205 8765	1			1996
13	5503 5951	1			AIR DEFLECTOR, Radiator Lower
14	6503 221	4			CLIP, Air Deflector
15	6030 441	4			RETAINER, Radiator Baffle
16	5503 1446	1			CROSSMEMBER, Front Lower
17	4741 365	1			CROSSMEMBER ASSY., Rear ***
18	4740 090	1			CROSSMEMBER ASSY., Floor & Fuel Tank ***
19		1			Sill, Rear ***
	4740 094-5				1994
	4796 684-5				1995,96
20	5503 2816-7	1			BRACKET, Fender & Fascia Attach
21		2			STRIKER, Rear Seat Cushion Latch
	5503 1442				1994
	5525 4989				1995,96

MODEL CODES:

72=2 DR Wagon
74=4 DR Wagon
77=Open Body 93" Whlbase
78=Open Body 103" Whlbase - Export
T=2WD
J,N=4WD
U=4WD (RHD)

BODY STYLES:

YJ=Wrangler (4X4) "S"
Weangler (4X4) SE
Wrangler (4X4) Sahara
Wrangler (4X4) Renegade
XJ=Cherokee SE
Cherokee Sport
Cherokee Country
ZJ=Grand Cherokee SE
Grand Cherokee Laredo
Grand Cherolee Limited
ZG=Grand Cherokee European
Y1=Wrangler
X1=Cherokee
Z1=Grand Cherokee
KDX=Vehicles

AR = Use as Required - = Non Illustrated Part P.A.R. = Paint as Required

PANS, FLOOR GRAND CHEEROKEE, ZJ
Figure SZJ-250

SZJ-250D

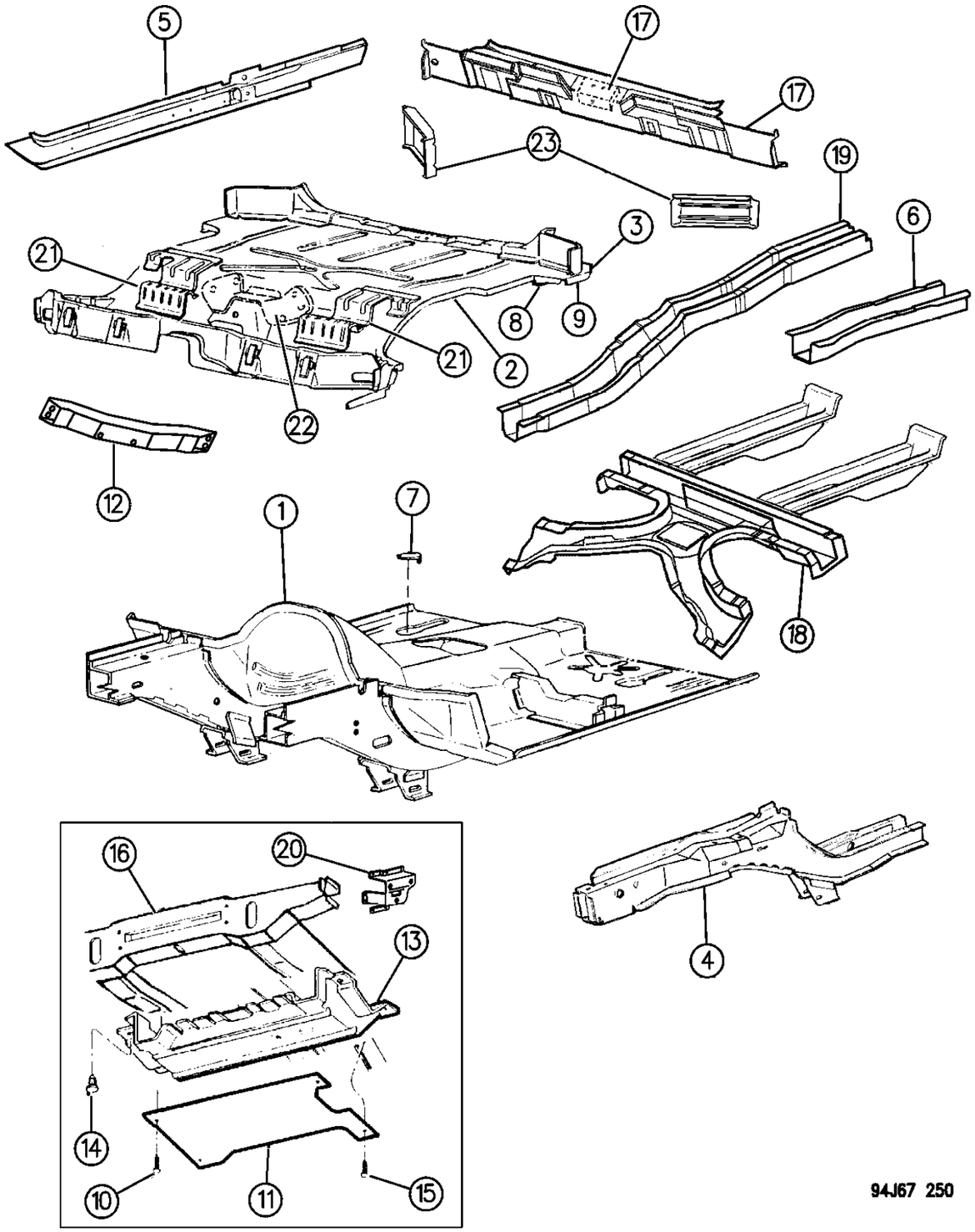

ITEM	PART NUMBER	QTY	BODY	MODEL	DESCRIPTION
22	5525 5813	2			REINFORCEMENT, Seat Belt Mounting, 1995,96
23	5503 4314-5	1			REINFORCEMENT, Sill to Rear Crossmember

MODEL CODES:

72=2 DR Wagon
74=4 DR Wagon
77=Open Body 93" Whlbase
78=Open Body 103" Whlbase - Export
T=2WD
J,N=4WD
U=4WD (RHD)

BODY STYLES:

YJ=Wrangler (4X4) "S"
Weangler (4X4) SE
Wrangler (4X4) Sahara
Wrangler (4X4) Renegade
XJ=Cherokee SE
Cherokee Sport
Cherokee Country
ZJ=Grand Cherokee SE
Grand Cherokee Laredo
Grand Cherolee Limited
ZG=Grand Cherokee European
Y1=Wrangler
X1=Cherokee
Z1=Grand Cherokee
KDX=Vehicles

AR = Use as Required - = Non Illustrated Part P.A.R. = Paint as Required

FRONT END SKID PLATES GRAND CHEROKEE, ZJ
Figure SZJ-260

SZJ-260

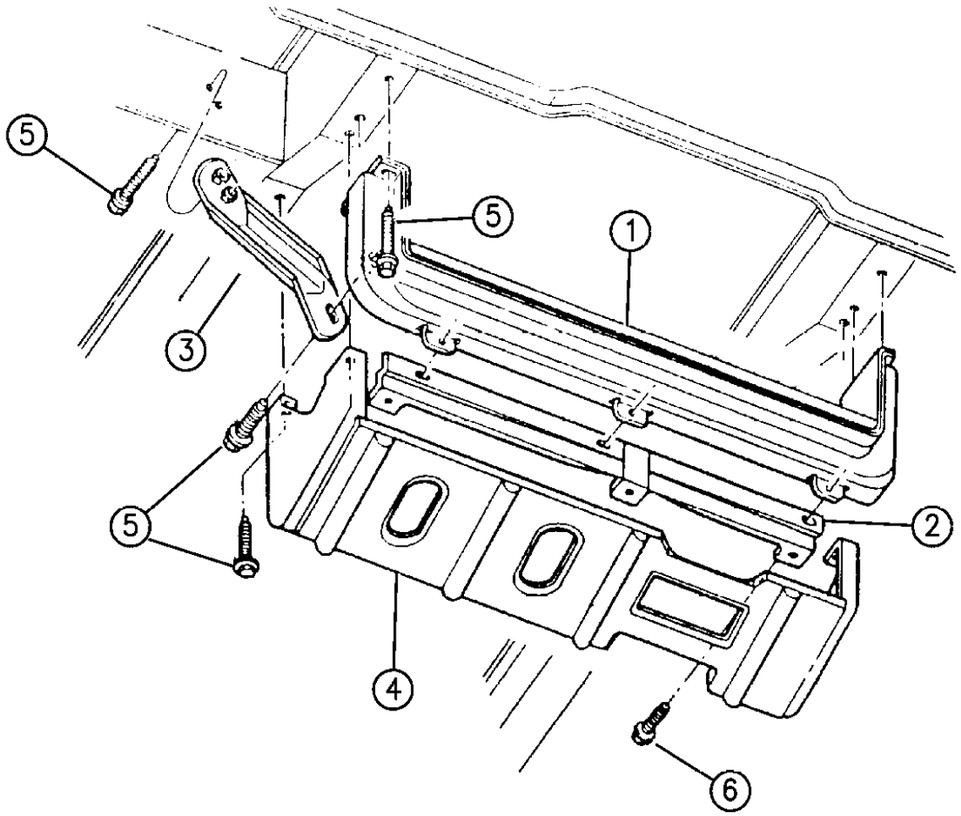

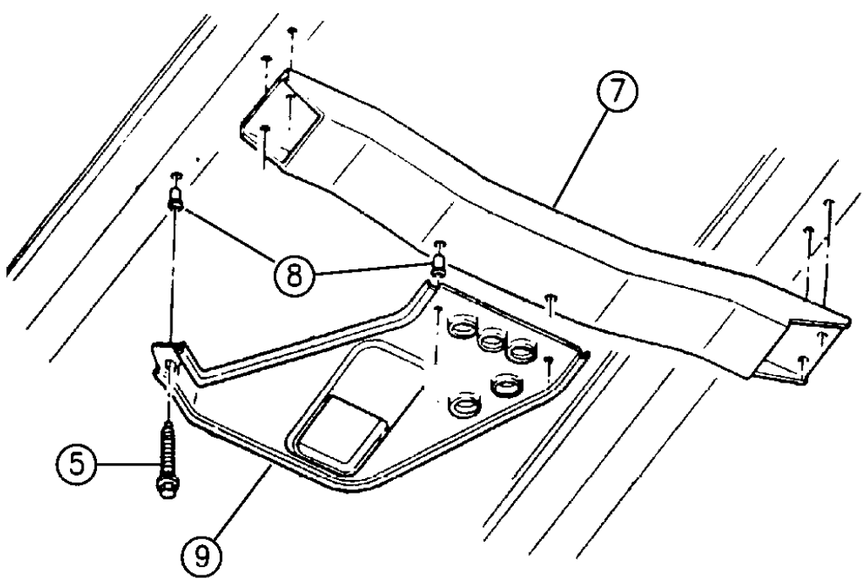

94J67 260

ITEM	PART NUMBER	QTY	BODY	MODEL	DESCRIPTION
1	5205 8196	1			CROSSMEMBER, Radiator Support, Lower
2	5205 8271	1			BRACKET, Fascia Support
3	5205 7506-7	1			SUPPORT, Bracket, H/LP Panel
4	5205 8358	1			SKID PLATE ***
	5305 4221	1	ZG		1996 (RHD)
5		AR			SCREW and WASHER, M10x1.50x35, (Not Serviced)
6		3			SCREW, Tapping, 10x5/8, (Not Serviced)
7					CROSSMEMBER, Trans. Support
	5205 8656	1			1994-95
	5205 8765	1			1996
8	6502 662	3			NUTSERT, Skid Plate Mounting ***
9	5200 5437	1			PLATE, Skid, Transfer Case

MODEL CODES:

72=2 DR Wagon
74=4 DR Wagon
77=Open Body 93" Whlbase
78=Open Body 103" Whlbase - Export
T=2WD
J,N=4WD
U=4WD (RHD)

BODY STYLES:

YJ=Wrangler (4X4) "S"
Weangler (4X4) SE
Wrangler (4X4) Sahara
Wrangler (4X4) Renegade
XJ=Cherokee SE
Cherokee Sport
Cherokee Country
ZJ=Grand Cherokee SE
Grand Cherokee Laredo
Grand Cherolee Limited
ZG=Grand Cherokee European
Y1=Wrangler
X1=Cherokee
Z1=Grand Cherokee
KDX=Vehicles

AR = Use as Required - = Non Illustrated Part P.A.R. = Paint as Required

« RETURN TO GROUP INDEX

PLUGS, BODY GRAND CHEROKEE, ZJ
Figure SZJ-320

SZJ-320D

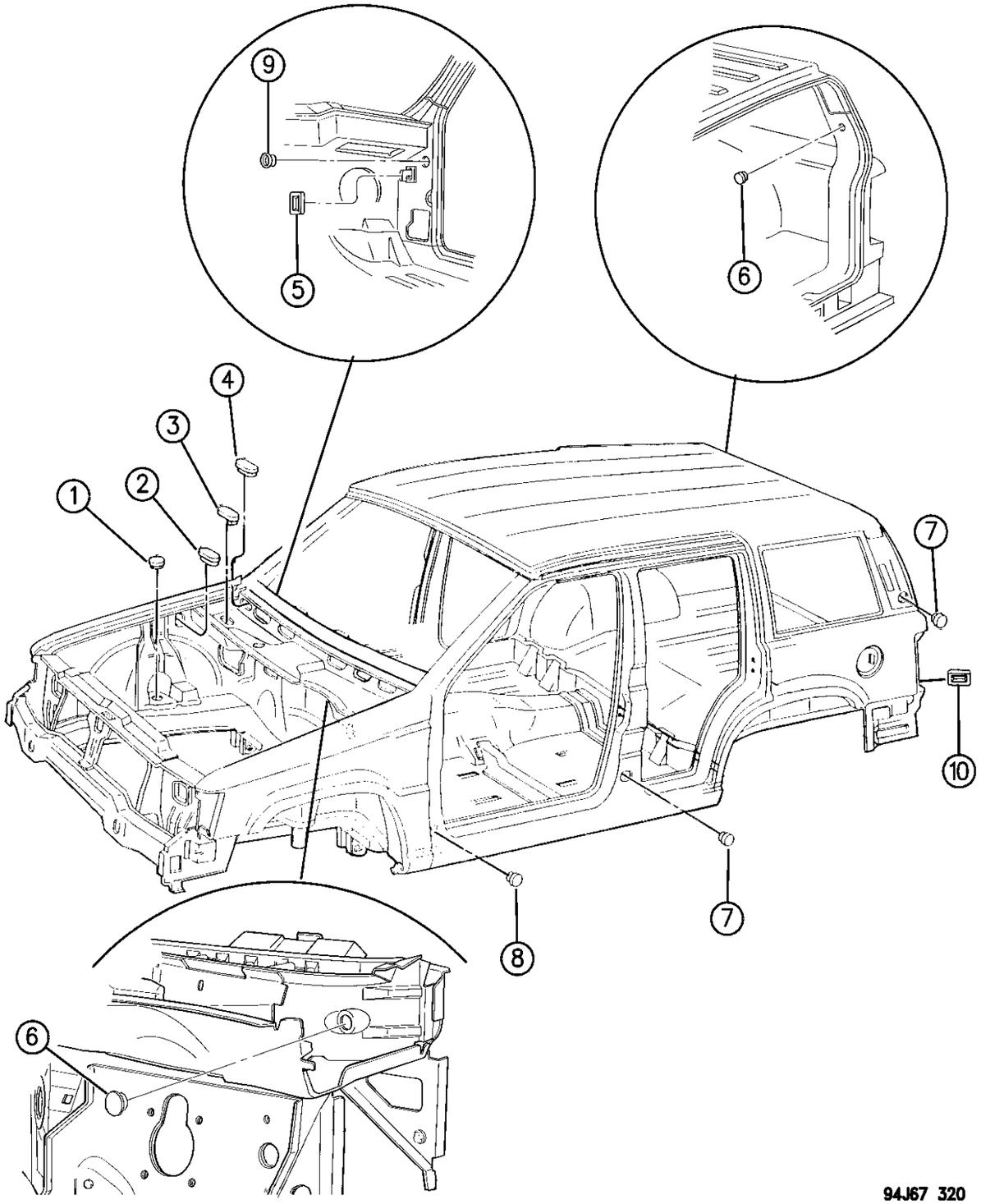

ITEM	PART NUMBER	QTY	BODY	MODEL	DESCRIPTION
1	4084 000	2			PLUG, Round
2	6004 507	2			PLUG, Rubber Cowl Side
3	4586 055	1			PLUG, Plenum
4	5500 2368	1			PLUG, Oval
5					PLUG, Cowl Side, Rectangular
	5513 4838	2			1994,95
	5529 5694	2			1996
6	2860 332	2			PLUG, 'D' Pillar
7	3420 2804	4			PLUG, Oval
8	2480 957	2			PLUG, Round
9	4337 950	2			PLUG, Door Ajar
10	5600 6276	AR			PLUG, Rear Quarter Panel, w/o Trailer Harness
-	5525 4958	1			PLUG, Hinge Access Hole Left Hand Cowl Side

MODEL CODES:

72=2 DR Wagon
74=4 DR Wagon
77=Open Body 93" Whlbase
78=Open Body 103" Whlbase - Export
T=2WD
J,N=4WD
U=4WD (RHD)

BODY STYLES:

YJ=Wrangler (4X4) "S"
Weangler (4X4) SE
Wrangler (4X4) Sahara
Wrangler (4X4) Renegade
XJ=Cherokee SE
Cherokee Sport
Cherokee Country
ZJ=Grand Cherokee SE
Grand Cherokee Laredo
Grand Cherolee Limited
ZG=Grand Cherokee European
Y1=Wrangler
X1=Cherokee
Z1=Grand Cherokee
KDX=Vehicles

AR = Use as Required - = Non Illustrated Part P.A.R. = Paint as Required

« RETURN TO GROUP INDEX

FENDERS, FRONT GRAND CHEROKEE, ZJ
Figure SZJ-450

SZJ-450

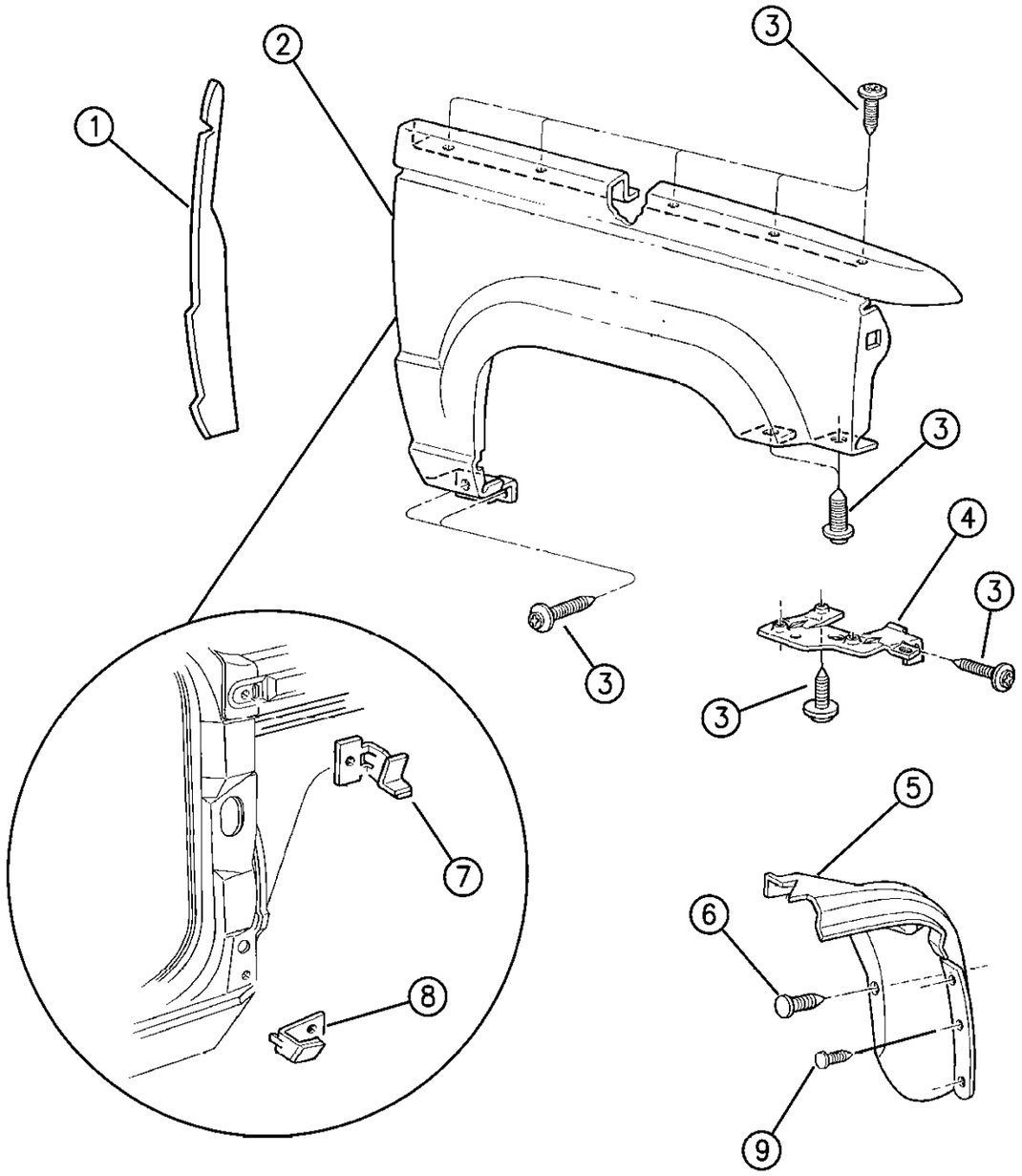

94J67 450

ITEM	PART NUMBER	QTY	BODY	MODEL	DESCRIPTION
1	5513 4804-5	1			SEAL, Fender to Cowl
2	5503 1834-5	1			FENDER
3	6503 686	AR			SCREW, Torx Round, M6-1.0 X 20.0
4	5503 3572-3	1			BRACKET, Fender Mounting, Front
5					LINER, Front Fender
	5503 1712-3	1			1994,95
	5529 5592-3	1			1996
-	6502 871	6			BOLT and RETAINER, Fender Liner to Front Fascia ***
6	J400 4919	10			FASTENER
7	5525 4832-3	1			REINFORCEMENT, Upper Rear
8	5525 4660-1	1			REINFORCEMENT, Lower Rear
9	3420 1631	6			RIVET, Plastic

MODEL CODES:

72=2 DR Wagon
74=4 DR Wagon
77=Open Body 93" Whlbase
78=Open Body 103" Whlbase - Export
T=2WD
J,N=4WD
U=4WD (RHD)

BODY STYLES:

YJ=Wrangler (4X4) "S"
Weangler (4X4) SE
Wrangler (4X4) Sahara
Wrangler (4X4) Renegade
XJ=Cherokee SE
Cherokee Sport
Cherokee Country
ZJ=Grand Cherokee SE
Grand Cherokee Laredo
Grand Cherolee Limited
ZG=Grand Cherokee European
Y1=Wrangler
X1=Cherokee
Z1=Grand Cherokee
KDX=Vehicles

AR = Use as Required - = Non Illustrated Part P.A.R. = Paint as Required

« RETURN TO GROUP INDEX

PANELS, FRONT END INNER AND WHEELHOUSE GRAND CHEROKEE, ZJ
Figure SZJ-460

SZJ-460C

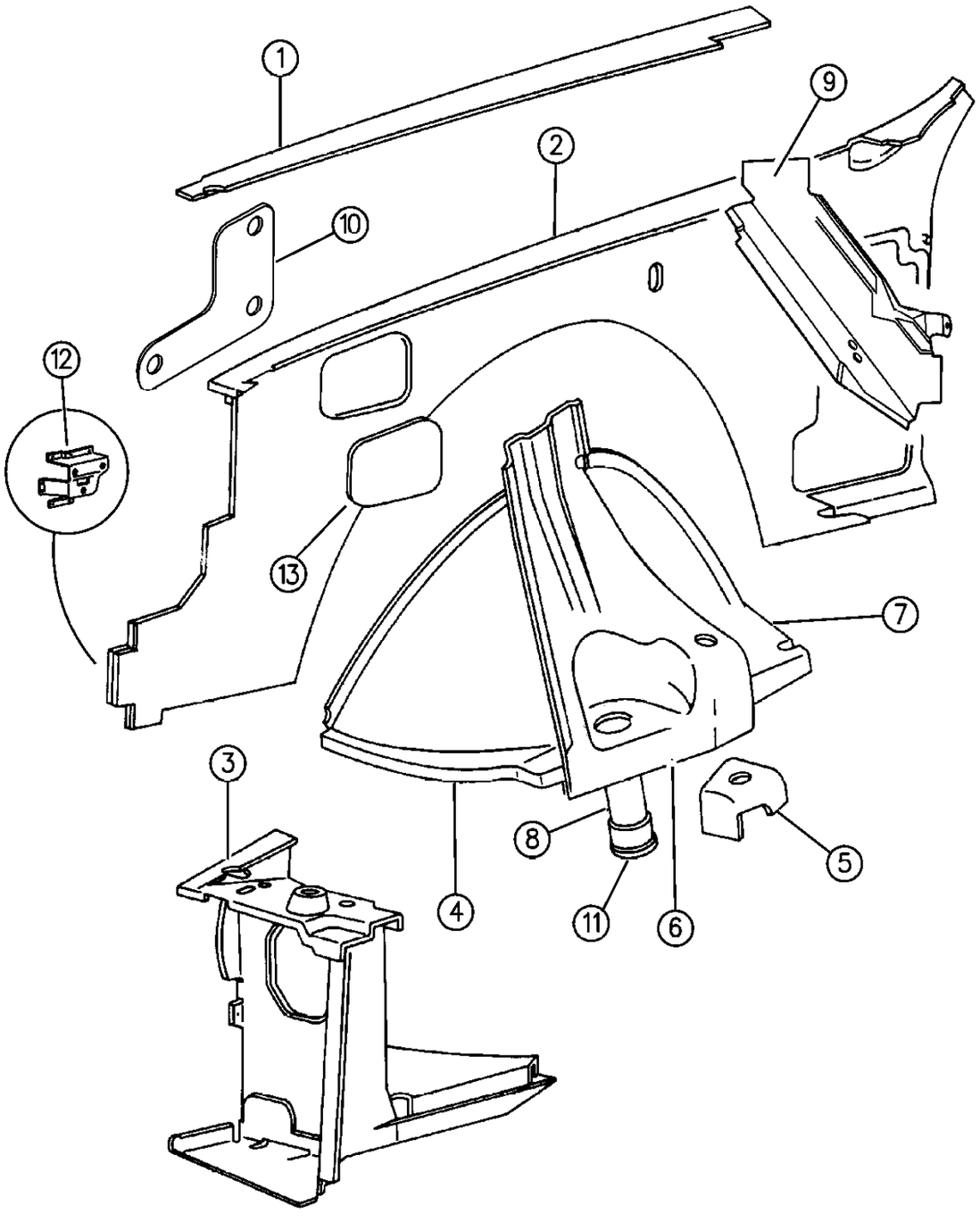

ITEM	PART NUMBER	QTY	BODY	MODEL	DESCRIPTION
1					REINFORCEMENT, Cowl Side, Upper
	5503 1564-5	1			1994,95
	5529 5888-9	1			1996
2					PANEL, Cowl Side
	5525 4986-7	1			Up to 2-14-94
	5525 5258-9	1			After 2-14-94
	5525 5674-5	1			1995
	5525 5038-9	1			1996
	5535 5656-7	1			1996, EXPORT
3					PANEL, Radiator Side
	5525 4738-9	1			1994
	5525 5256-7	1			1995
	5525 5580-1	1			1996
4					PANEL, Front Wheelhouse, Front
	5503 3612	1			Right
	5503 1509	1			Left
5	5503 1838-9	1			REINFORCEMENT, Spring and Shock Mounting Support
6	5525 4566-7	1			SUPPORT ASSY., Front Suspension ***
7					PANEL, Front Wheelhouse, Rear
	5503 2510-1	1			1994,95
					1996
	5503 2510	1			Right
	5535 5690	1		ZG, Z1	Left, Export
	5503 2511	1		ZJ	Left
8	5525 5050	1			GUIDE ASSY., Front Suspension Spring Retainer, Outer,
					Consists of Guide and Reinforcement ***
9	5503 3348-9	1			REINFORCEMENT, Cowl Side, Lower
10	5525 4583	1			PLATE, Tapping, Hood Release to Cowl Side, Left Only
11	5208 7635	2			RETAINER, Front Axle Jounce Bumper
12	5503 2816-7	1			BRACKET, Fender & Fascia Attach
13	5529 5760	1			COVER, Cowl Side Panel, (1996 Only)
	5208 7636	2			JOUNCE BUMPER, Front ***
	6100 402	2			BOLT, Attach Front Jounce Bumper

MODEL CODES:

72=2 DR Wagon
74=4 DR Wagon
77=Open Body 93" Whlbase
78=Open Body 103" Whlbase - Export
T=2WD
J,N=4WD
U=4WD (RHD)

BODY STYLES:

YJ=Wrangler (4X4) "S"
Weangler (4X4) SE
Wrangler (4X4) Sahara
Wrangler (4X4) Renegade
XJ=Cherokee SE
Cherokee Sport
Cherokee Country
ZJ=Grand Cherokee SE
Grand Cherokee Laredo
Grand Cherolee Limited
ZG=Grand Cherokee European
Y1=Wrangler
X1=Cherokee
Z1=Grand Cherokee
KDX=Vehicles

AR = Use as Required - = Non Illustrated Part P.A.R. = Paint as Required

« RETURN TO GROUP INDEX

HOOD, LATCH AND HINGES GRAND CHEROKEE, ZJ
Figure SZJ-530

SZJ-530B

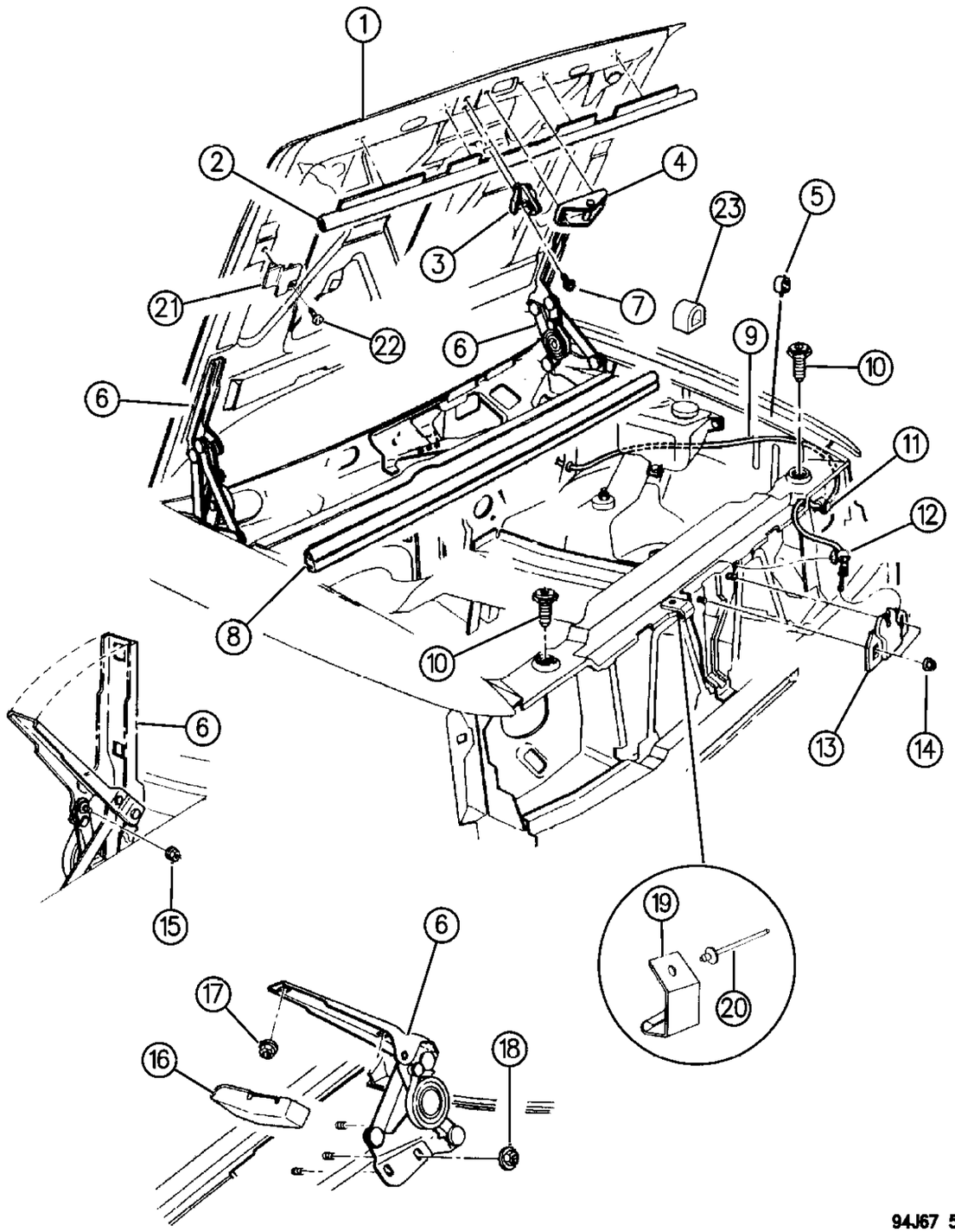

ITEM	PART NUMBER	QTY	BODY	MODEL	DESCRIPTION
1		1			HOOD ***
	5503 3810				1994
	5525 5640				1995
	5529 5753				1996
					INSULATION, Hood
	5521 5330	1			
	5507 4731	1			w/Diesel
-	6003 351	16			CLIP, Push-In, Hood Insulation
2	5503 5971	1			SEAL, Hood
3	5507 5322	1			CATCH, Assy. Secondary
4		1			STRIKER, Hood Latch
	5503 0115				Up to 8-3-93
	5507 5754				After 8-3-93
5	5525 4775	2			BUMPER, Hood Front Side
6		1			HINGE
	5507 5324-5				Up to 11-15-93
	5507 5960-1				After 11-15-93
7	6502 064	1			SCREW, Catch Assy.
8	5503 0432	1			SEAL, Assy, Hood
9		1			CABLE, Hood Release
	5503 0118				Up to 4-25-94
	5507 6109				After 4-25-94
10	4103 165	2			BUMPER, Croosmember Hood Slam
11	6502 784	1			CLIP
12	3420 1966	1			CLIP
13	5507 5323	1			LATCH, Hood
14	6503 664	2			NUT and WASHER
15		2			NUT, Locking M8x1.25, (Not Serviced)
16	5513 5118-9	1			SEAL, Hood to Plenum End
17	6100 051	4			NUT and WASHER
18	6101 445	6			NUT and WASHER
19	5503 2768	1			SKID PLATE, Hood Secondary Catch ***
20	3420 1032	1			RIVET
21	5600 7200	1			STRIKER, Security Alarm
22		1			SCREW, .164-15x.500, (Not Serviced)
23		2			BUMPER, Hood
	5525 4803				Up to 10-14-94, w/Adhesive
	5529 5690				After 10-14-94, Adjustable
-	5303 0451	1			LABEL, General Information

MODEL CODES:

72=2 DR Wagon
74=4 DR Wagon
77=Open Body 93" Whlbase
78=Open Body 103" Whlbase - Export
T=2WD
J,N=4WD
U=4WD (RHD)

BODY STYLES:

YJ=Wrangler (4X4) "S"
Weangler (4X4) SE
Wrangler (4X4) Sahara
Wrangler (4X4) Renegade
XJ=Cherokee SE
Cherokee Sport
Cherokee Country
ZJ=Grand Cherokee SE
Grand Cherokee Laredo
Grand Cherolee Limited
ZG=Grand Cherokee European
Y1=Wrangler
X1=Cherokee
Z1=Grand Cherokee
KDX=Vehicles

AR = Use as Required - = Non Illustrated Part P.A.R. = Paint as Required

« RETURN TO GROUP INDEX

PANELS, COWL AND DASH GRAND CHEROKEE, ZJ
Figure SZJ-640

SZJ-640A

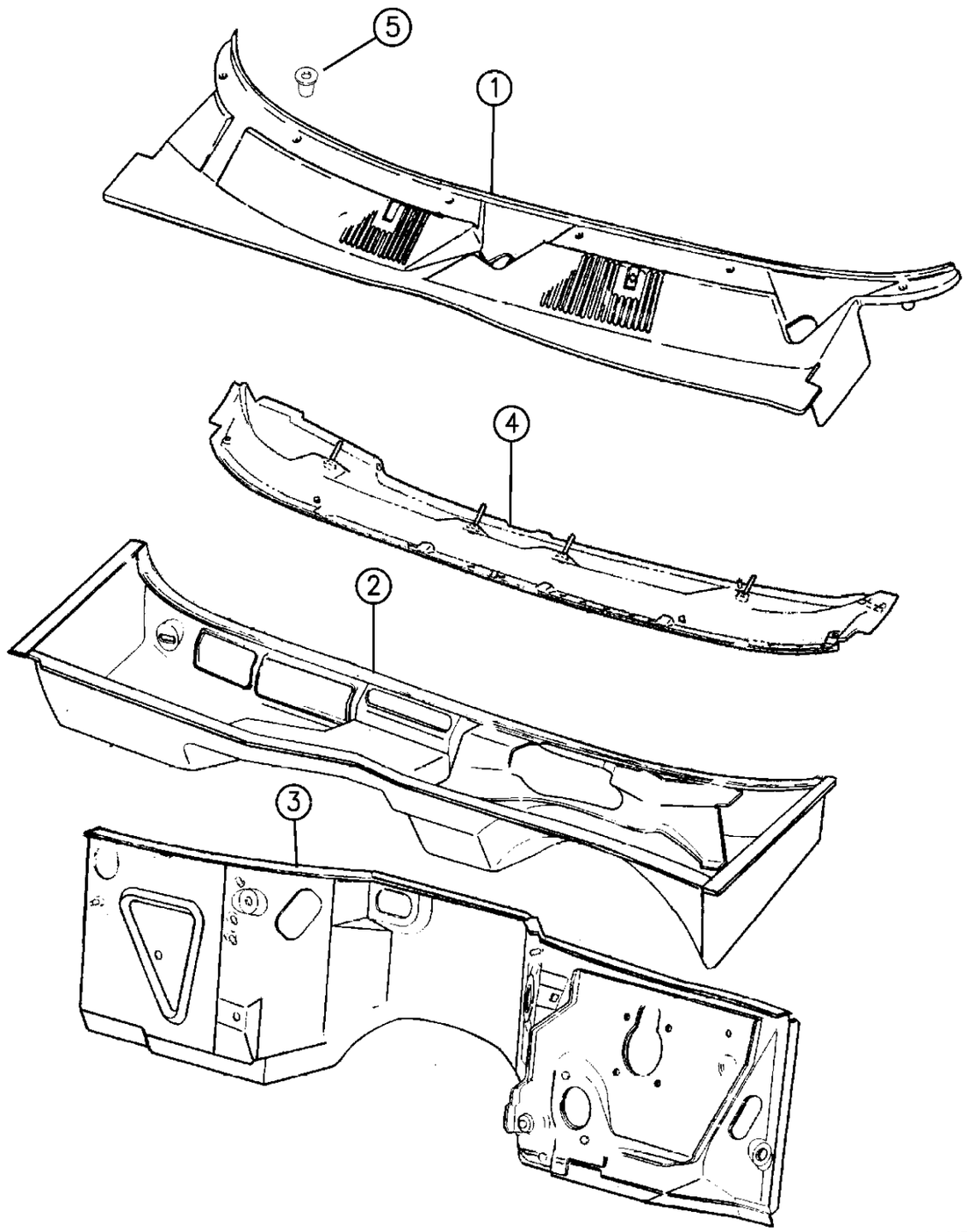

ITEM	PART NUMBER	QTY	BODY	MODEL	DESCRIPTION
1					COVER, Cowl Grille
	5503 5947	1			Up to 2-4-94
	5503 6480	1			After 2-4-94, Up to 11-20-95 Casting# 55034436
	5511 5794	1			After 11-20-95
Screw used to attach cover for 1994-95 is not serviced. The size is .164-18x1.50. e Adhesive #312.					
	5535 5618	1	ZG		GRILLE, Cowl Top Cover, R.H.D.
2					PLENUM ***
	5503 3275	1			1994,95
	5529 5759	1			1996
	5535 5602	1	ZG		1996, All Gas, R.H.D.
	5535 5704	1	ZG		1996, 4.0L Diesel, R.H.D.
-	5535 5702	1	ZG		PLATE, Plenum End Baffle (RHD)
3					PANEL, Dash
					L.H.D.
	5525 5122	1			Gas Engine
	5525 4854	1			Diesel Engine
					R.H.D.
	5535 5686	1	ZG		Gas Engine
	5535 5691	1	ZG		Diesel Engine
4					PANEL ASSEMBLY, Cowl Top ***
	5503 1824	1			1994,95
	5525 5035	1			1996
	5535 5629	1	ZG		1996, R.H.D.
	5519 6102-3	1	ZG		INSULATOR, Plenum, Upper ***
-	5525 6031	1			PATCH, Sealing ***
5	6503 339	6			NUT, Attach Cover to Cowl Top, 1996

MODEL CODES:

72=2 DR Wagon
74=4 DR Wagon
77=Open Body 93" Whlbase
78=Open Body 103" Whlbase - Export
T=2WD
J,N=4WD
U=4WD (RHD)

BODY STYLES:

YJ=Wrangler (4X4) "S"
Weangler (4X4) SE
Wrangler (4X4) Sahara
Wrangler (4X4) Renegade
XJ=Cherokee SE
Cherokee Sport
Cherokee Country
ZJ=Grand Cherokee SE
Grand Cherokee Laredo
Grand Cherolee Limited
ZG=Grand Cherokee European
Y1=Wrangler
X1=Cherokee
Z1=Grand Cherokee
KDX=Vehicles

AR = Use as Required - = Non Illustrated Part P.A.R. = Paint as Required

« RETURN TO GROUP INDEX

GLASS, WINDSHIELD, QUARTER AND REAR VIEW MIRROR GRAND CHEROKEE, ZJ
Figure SZJ-770

SZJ-770A

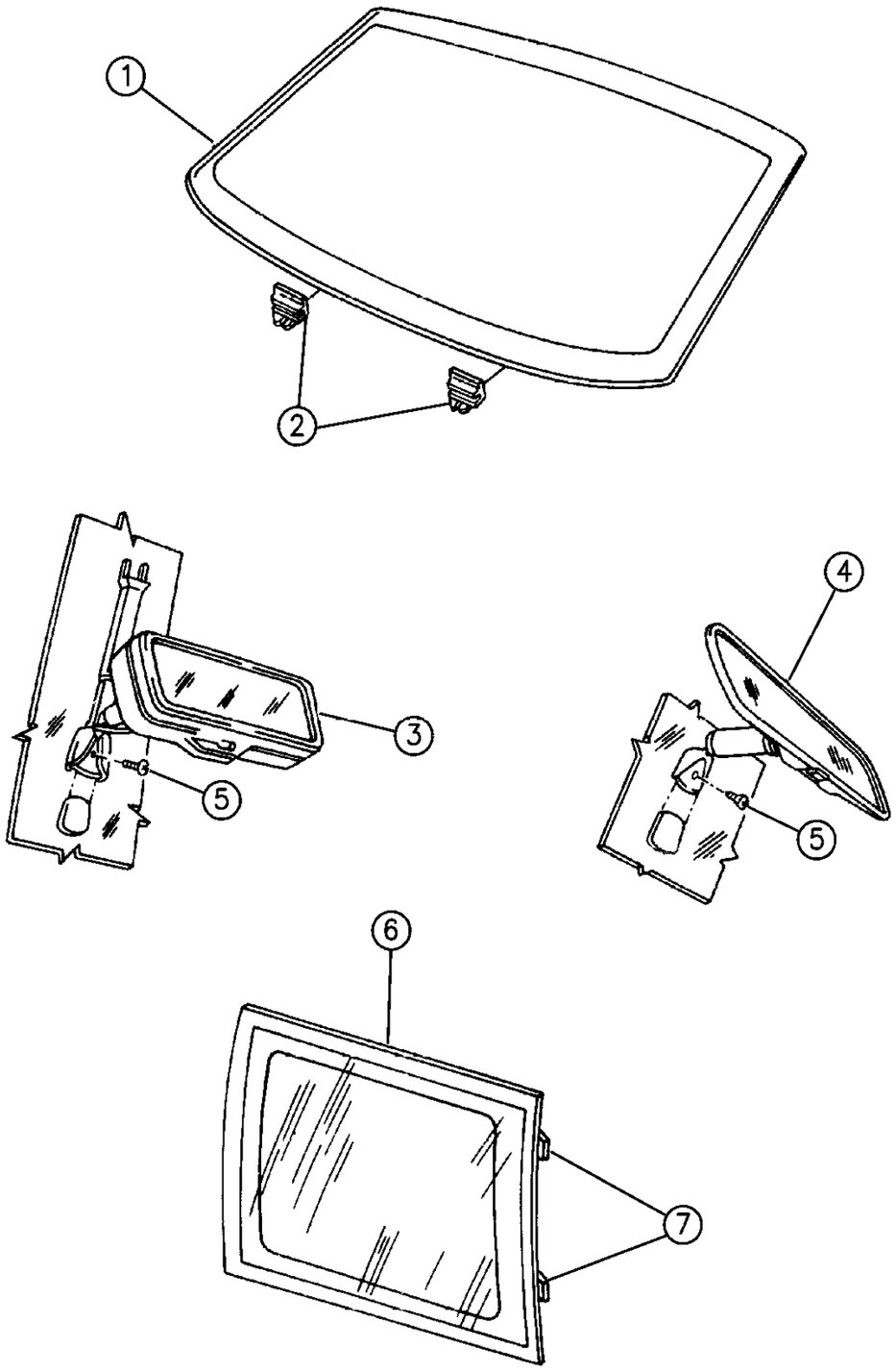

94J67 770

ITEM	PART NUMBER	QTY	BODY	MODEL	DESCRIPTION
1	5515 5077	1			WINDSHIELD, Tinted ***
-	5507 6401	1			BUTTON, Mirror
-	4293 093	1			ADHESIVE, Mirror Attach
2	4416 497	2			SPACER, Windshield Align
3					MIRROR, Electrochromic
	4520 380	1			1994
	5515 4990	1			1995
	5515 5314	1			1996
-	5507 4840	1			WIRE COVER PACKAGE
					MIRROR, w/courtesy read light, (Used in vehicles w/sunroofs)
	5507 5456	1			1994
	5515 4990	1			1995
4	4520 336	1			MIRROR, Prismatic, Day Night
5	6031 094	1			SCREW
6					GLASS, Quarter Window
	5513 5068-9	1			Tinted
					Sunscreen
	5513 5070-1	1			1994
	5525 5600-1	1			1995,96
	5513 5072-3	1			Tinted, Export Equipment Pkg. (S/C-ABE)
7	6004 517	4			CLIP, Glass Retention, (6 per side)
-	4864 015	1			INSTALLATION PACKAGE, Windshield ***

MODEL CODES:

72=2 DR Wagon
74=4 DR Wagon
77=Open Body 93" Whlbase
78=Open Body 103" Whlbase - Export
T=2WD
J,N=4WD
U=4WD (RHD)

BODY STYLES:

YJ=Wrangler (4X4) "S"
Weangler (4X4) SE
Wrangler (4X4) Sahara
Wrangler (4X4) Renegade
XJ=Cherokee SE
Cherokee Sport
Cherokee Country
ZJ=Grand Cherokee SE
Grand Cherokee Laredo
Grand Cherolee Limited
ZG=Grand Cherokee European
Y1=Wrangler
X1=Cherokee
Z1=Grand Cherokee
KDX=Vehicles

AR = Use as Required - = Non Illustrated Part P.A.R. = Paint as Required

« RETURN TO GROUP INDEX

GLASS, BACKLITE GRAND CHEROKEE, ZJ
Figure SZJ-775

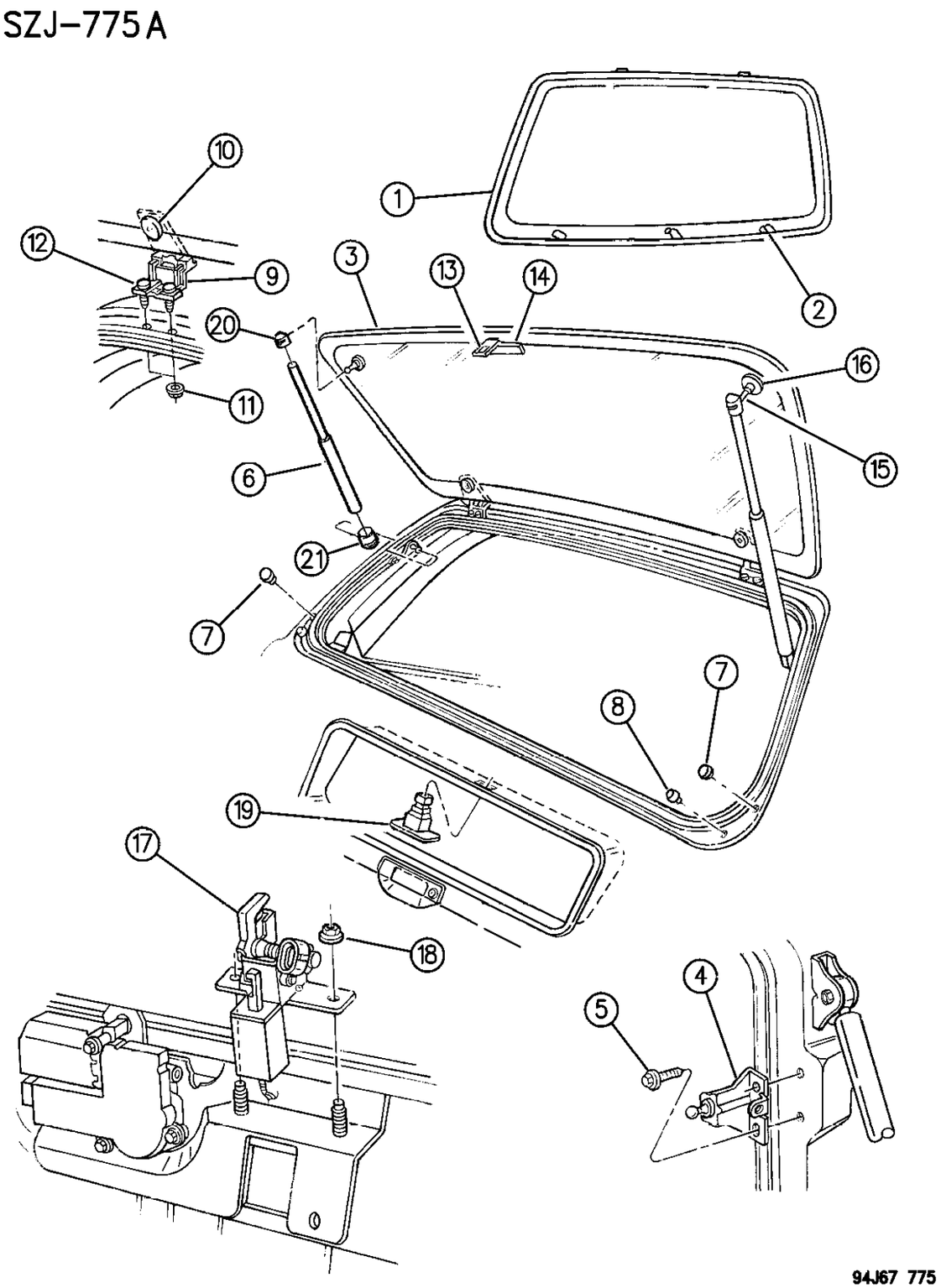

ITEM	PART NUMBER	QTY	BODY	MODEL	DESCRIPTION
1		1			BACKLITE, Fixed ***
					Sunscreen, Heated
	5515 4820				1994
	5525 5596				1995, Up to 1-3-95
	5525 6010				1995,96, After 1-3-95
					Tinted, Heated
	5515 4817				1994, Up to 1-3-95
	5525 6001				1995,96, After 1-3-95
					Tinted, EUROPE
	5525 5358				1994, Up to 1-3-95
	5525 6065				1995,96, After 1-3-95
2	6004 502	7			CLIP
3		1			BACKLITE, Flipper, 1996 ***
	5515 4927				Tinted, Heated
	5525 5594				Sunscreen, Heated
	5525 6063	1			STICKER, Flipper Glass Gas Intrusion Warning ***
	5513 4830	1			WEATHERSTRIP, Flipper Glass
	4661 348	2			TERMINAL, Attach Heated Backlite ***
4	5507 5226-7	1			BALL STUD & BRACKET ASSY., Flipper Glass ***
5	6502 865	4			SCREW, M5x0.8x16.00
6	5507 6210	2			GAS CYLINDER ***
7	3760 482	2			PLUG
8	5507 5377	2			BUMPER
9	5507 5162-3	1			HINGE, Assy.
10	5507 5164	2			GASKET, Liftgate Hinge to Glass
11		2			NUT & WASHER, M5x0.80, Not Serviced ***
12	6502 900	2			SCREW, M6x1.0x12.7
13	5507 5170	1			STRIKER, Liftgate Glass
14	5507 5169	1			HANDLE
	5507 5220	1			GASKET, Handle to Glass
	6035 479	2			STUD
15	5507 5174	2			BALL STUD, Cylinder to Glass ***
16					GASKET, Ball Stud Attach
	5507 5175	2			1994,95
	5529 5914	2			1996
	6502 913	2			STUD, To Ball Stud
17	4773 769	1			LATCH, Less Switch
	4773 770	1			SCREW, To Switch
18	6500 284	2			NUT, Attach Latch to Body
19					SWITCH
	5600 7022	1			Liftgate, Flip Up
	5600 5640	1			Security Alarm/ Cargo Lamp

MODEL CODES:

72=2 DR Wagon
74=4 DR Wagon
77=Open Body 93" Whlbase
78=Open Body 103" Whlbase - Export
T=2WD
J,N=4WD
U=4WD (RHD)

BODY STYLES:

YJ=Wrangler (4X4) "S"
Weangler (4X4) SE
Wrangler (4X4) Sahara
Wrangler (4X4) Renegade
XJ=Cherokee SE
Cherokee Sport
Cherokee Country
ZJ=Grand Cherokee SE
Grand Cherokee Laredo
Grand Cherolee Limited
ZG=Grand Cherokee European
Y1=Wrangler
X1=Cherokee
Z1=Grand Cherokee
KDX=Vehicles

AR = Use as Required - = Non Illustrated Part P.A.R. = Paint as Required

SZJ-775A

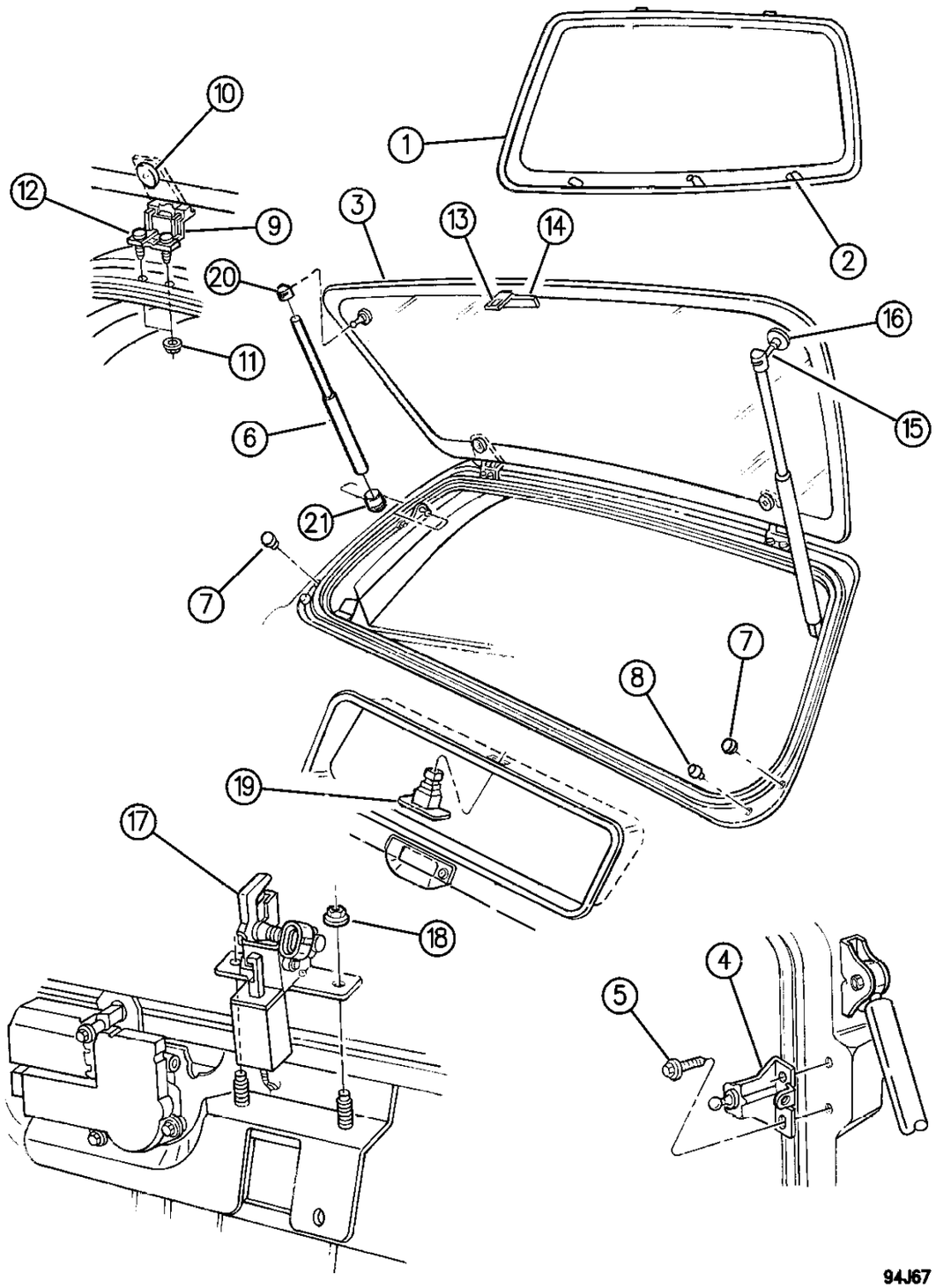

ITEM	PART NUMBER	QTY	BODY	MODEL	DESCRIPTION
20	5507 6299	2			CAP, Cylinder Locking, Small
21	5507 6300	2			CAP, Cylinder, Large

MODEL CODES:

72=2 DR Wagon
74=4 DR Wagon
77=Open Body 93" Whlbase
78=Open Body 103" Whlbase - Export
T=2WD
J,N=4WD
U=4WD (RHD)

BODY STYLES:

YJ=Wrangler (4X4) "S"
Weangler (4X4) SE
Wrangler (4X4) Sahara
Wrangler (4X4) Renegade

XJ=Cherokee SE
Cherokee Sport
Cherokee Country

ZJ=Grand Cherokee SE
Grand Cherokee Laredo
Grand Cherolee Limited
ZG=Grand Cherokee European

Y1=Wrangler
X1=Cherokee
Z1=Grand Cherokee
KDX=Vehicles

AR = Use as Required - = Non Illustrated Part P.A.R. = Paint as Required

PANELS, BODY SIDE GRAND CHEROKEE, ZJ
Figure SZJ-840

SZJ-840B

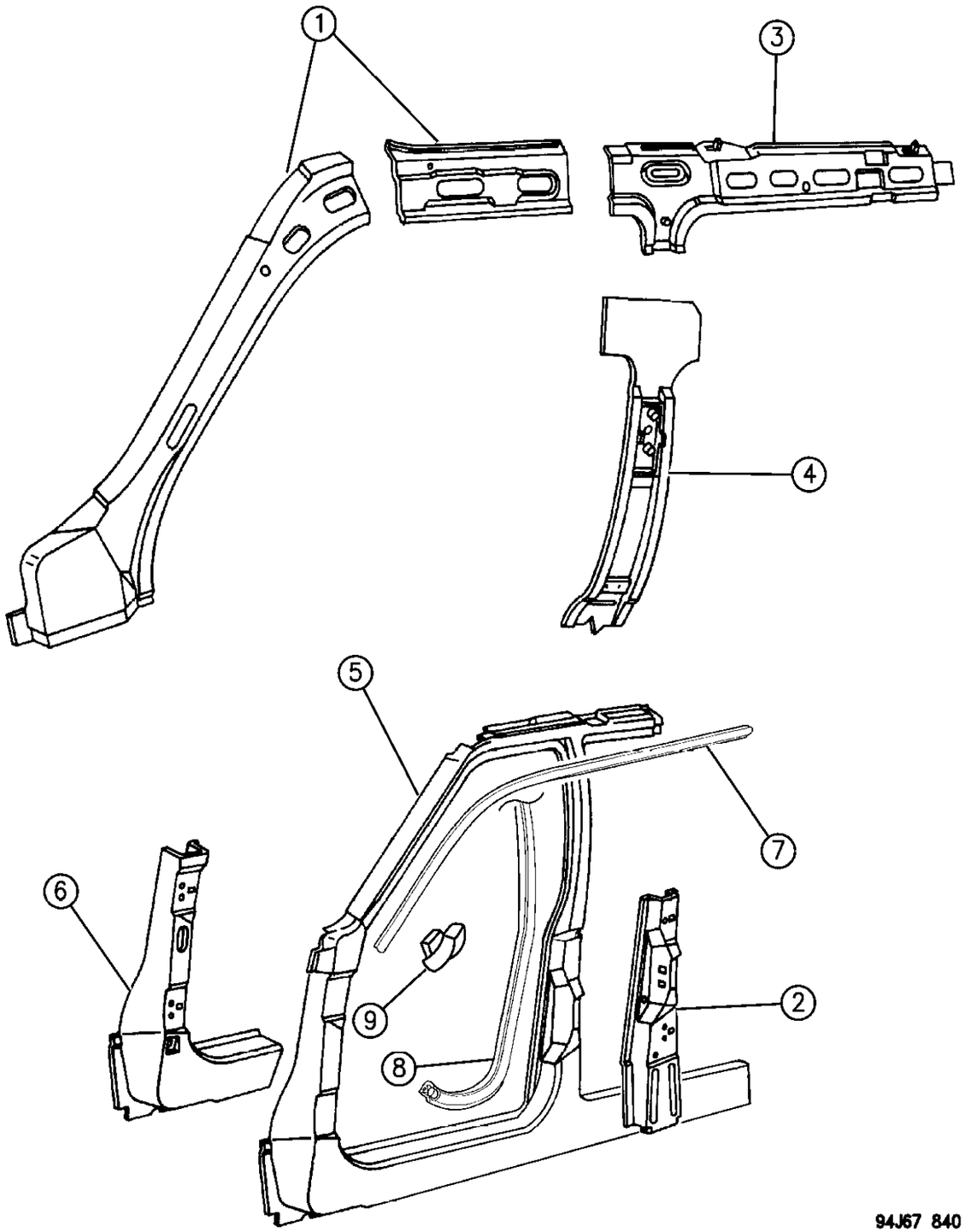

ITEM	PART NUMBER	QTY	BODY	MODEL	DESCRIPTION
1	4740 282-3	1			PILLAR, Upper Front
2					REINFORCEMENT, Rear Door Hinge
	5503 1556-7	1			1994,95
	5525 5004-5	1			1996
3	5503 1598-9	1			RAIL, Roof Side Inner
4					PILLAR, Center, Inner ***
	5525 4842-3	1			1994,95
	5525 4938-9	1			1996
5					PANEL, Bodyside Front, Outer
	5502 7104-5	1			1994,95
	5529 5794-5	1			1996
6	5525 4792-3	1			REINFORCEMENT, Front Door Hinge Pillar
7	5513 4570-1	1			SEAL, Bodyside Upper
8	5513 4722-3	1			SEAL, Front Door, (Green Right, Orange Left)
9	5513 4790	2			BLOCKER, Seal Exterior A-Pillar ***

MODEL CODES:

72=2 DR Wagon
74=4 DR Wagon
77=Open Body 93" Whlbase
78=Open Body 103" Whlbase - Export
T=2WD
J,N=4WD
U=4WD (RHD)

BODY STYLES:

YJ=Wrangler (4X4) "S"
Weangler (4X4) SE
Wrangler (4X4) Sahara
Wrangler (4X4) Renegade
XJ=Cherokee SE
Cherokee Sport
Cherokee Country
ZJ=Grand Cherokee SE
Grand Cherokee Laredo
Grand Cherolee Limited
ZG=Grand Cherokee European
Y1=Wrangler
X1=Cherokee
Z1=Grand Cherokee
KDX=Vehicles

AR = Use as Required - = Non Illustrated Part P.A.R. = Paint as Required

« RETURN TO GROUP INDEX

PANELS, REAR QUARTER GRAND CHEROKEE, ZJ
Figure SZJ-960

SZJ-960A

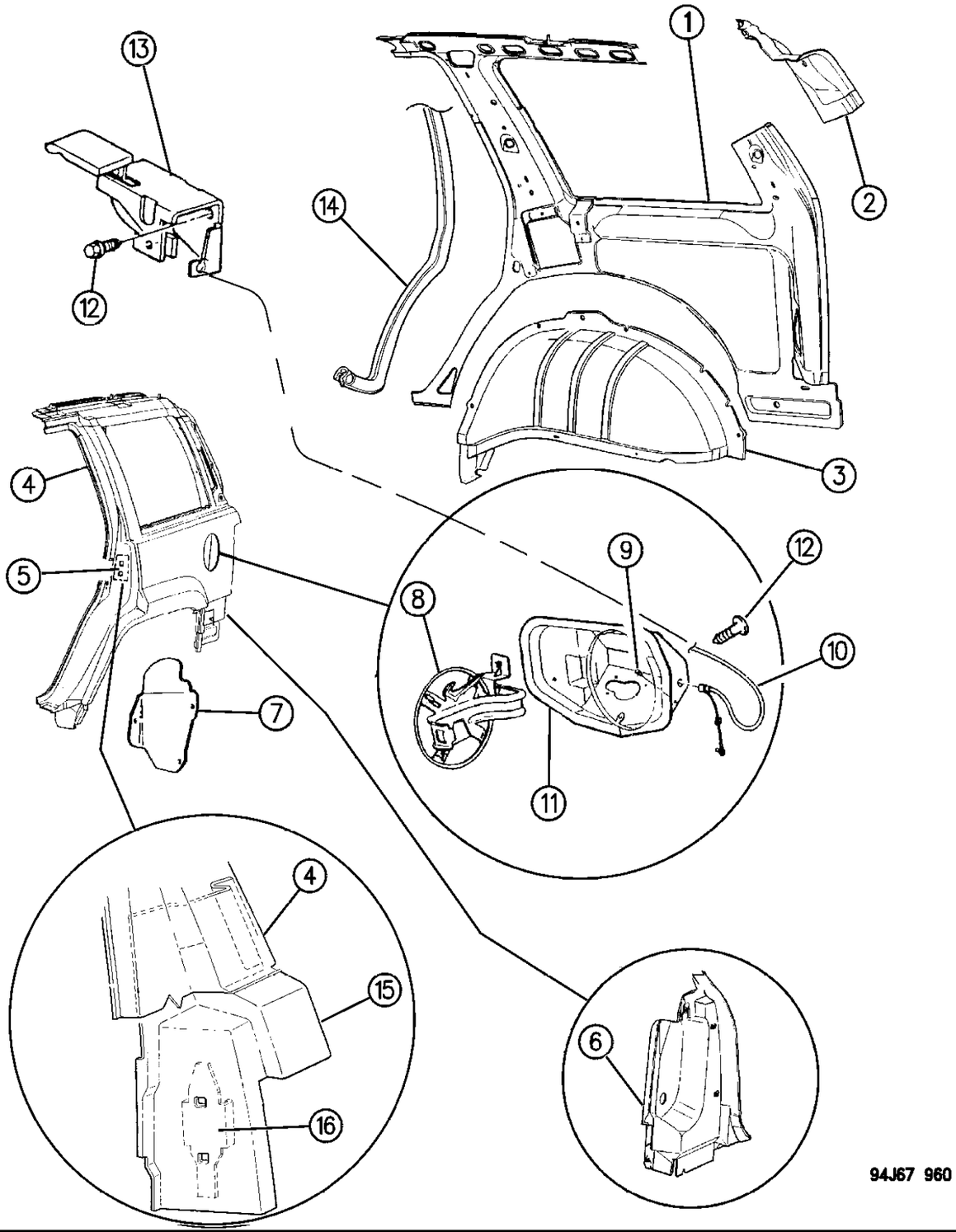

ITEM	PART NUMBER	QTY	BODY	MODEL	DESCRIPTION
1					PANEL, Quarter Inner and Wheelhouse Outer
	4796 428-9	1			1994, 1995 Up to 10-17-94
	4797 536-7	1			1995, After 10-17-94
	4798 774-5	1			1996
2					REINFORCEMENT, Quarter Inner Upper Rear
	5525 5054-5	1			1994,95
	5529 5946-7	1			1996
3					PANEL, Rear Wheelhouse, Inner
	5503 1552	1			Right
	5525 4795	1			Left
4					PANEL, Quarter Outer
	5502 7108-9	1			1994,95,96, Up to 1-2-96 U.S. Built, 2-12-96 AUSTRIA Built
	5529 6054-5	1			1996, After 1-2-96 U.S.Built, 2-12-96 AUSTRIA Built
5	4512 870	2			PLATE, Door Striker
6	5529 5882-3	1			PANEL, Tail Lamp Mounting
7	5503 1994-5	1			SHIELD, Splash, Rear Wheelhouse
-	6502 871	4			BOLT and RETAINER, Splash Shield to Rear Fascia ***
8					DOOR, Fuel Filler
	5503 0007	1			1994-95
	5529 5932	1			1996
-	5529 5855	1			LABEL, "FUEL UNLEADED ONLY"
-	5529 5856	1		ZG	LABEL, "FUEL UNLEADED ONLY", Bilingual
-	5529 5854	1		ZG	LABEL, "DIESEL FUEL ONLY" Bilingual
9					BUMPER
	4337 144	2			1994-95
	5529 5937	2			1996
10	5503 0119	1			CABLE and LATCH, Fuel Filler Door
11					HOUSING, Fuel Filler
	5503 1589	1			1994,95
	5525 5439	1			1996
12		AR			SCREW, M6x1.00x15.00, Not Serviced
13	5503 2190	1			HANDLE, Fuel Filler Door
14	5513 4724-5	1			SEAL, Rear Door
15	5525 4790-1	1			REINFORCEMENT, Quarter Outer & Rear Door Striker
16	4512 871	2			RETAINER, Door Striker Tapping Plate

MODEL CODES:

72=2 DR Wagon
74=4 DR Wagon
77=Open Body 93" Whlbase
78=Open Body 103" Whlbase - Export
T=2WD
J,N=4WD
U=4WD (RHD)

BODY STYLES:

YJ=Wrangler (4X4) "S"
Weangler (4X4) SE
Wrangler (4X4) Sahara
Wrangler (4X4) Renegade
XJ=Cherokee SE
Cherokee Sport
Cherokee Country
ZJ=Grand Cherokee SE
Grand Cherokee Laredo
Grand Cherolee Limited
ZG=Grand Cherokee European
Y1=Wrangler
X1=Cherokee
Z1=Grand Cherokee
KDX=Vehicles

AR = Use as Required - = Non Illustrated Part P.A.R. = Paint as Required

« RETURN TO GROUP INDEX

PANELS, ROOF GRAND CHEROKEE, ZJ
Figure SZJ-1180

SZJ-1180A

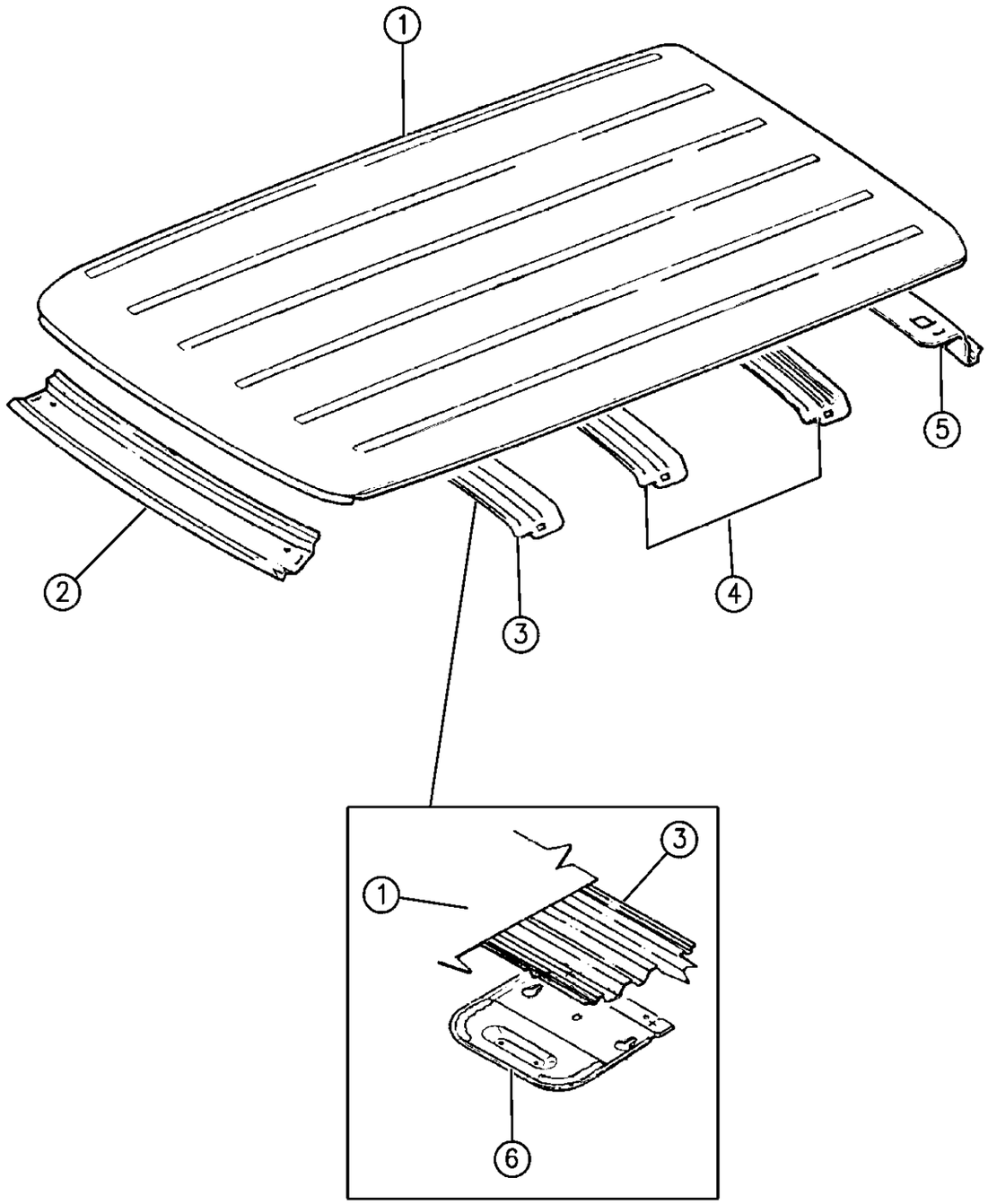

94J67 1180

ITEM	PART NUMBER	QTY	BODY	MODEL	DESCRIPTION
1					PANEL, Roof
					w/o Sunroof, w/luggage Rack
	5525 4980	1			1994,95
	5525 6060	1			1996
					w/Sunroof and Luggage Rack
	5525 4994	1			1994,95
	5529 5742	1			1996
2	5503 1612	1			HEADER, Front ***
3	4723 693	1			BOW
4	5503 1829	2			BOW
5		1			HEADER, Rear, Upper ***
	4457 533				1994
	4796 409				1995,96
	5535 5669	1	ZG		REINFORCEMENT, Header Lower, Rear, R.H.D., (Must Weld to Header For ZG.), 1996
6	5503 2509	1			BRACKET, Dome Lamp Mounting, (Also Serviced in Item 3)

MODEL CODES:

72=2 DR Wagon
74=4 DR Wagon
77=Open Body 93" Whlbase
78=Open Body 103" Whlbase - Export
T=2WD
J,N=4WD
U=4WD (RHD)

BODY STYLES:

YJ=Wrangler (4X4) "S"
Weangler (4X4) SE
Wrangler (4X4) Sahara
Wrangler (4X4) Renegade

XJ=Cherokee SE
Cherokee Sport
Cherokee Country

ZJ=Grand Cherokee SE
Grand Cherokee Laredo
Grand Cherolee Limited
ZG=Grand Cherokee European

Y1=Wrangler
X1=Cherokee
Z1=Grand Cherokee
KDX=Vehicles

AR = Use as Required - = Non Illustrated Part P.A.R. = Paint as Required

SUNROOF COMPONENT PARTS GRAND CHEROKEE, ZJ
Figure SZJ-1210

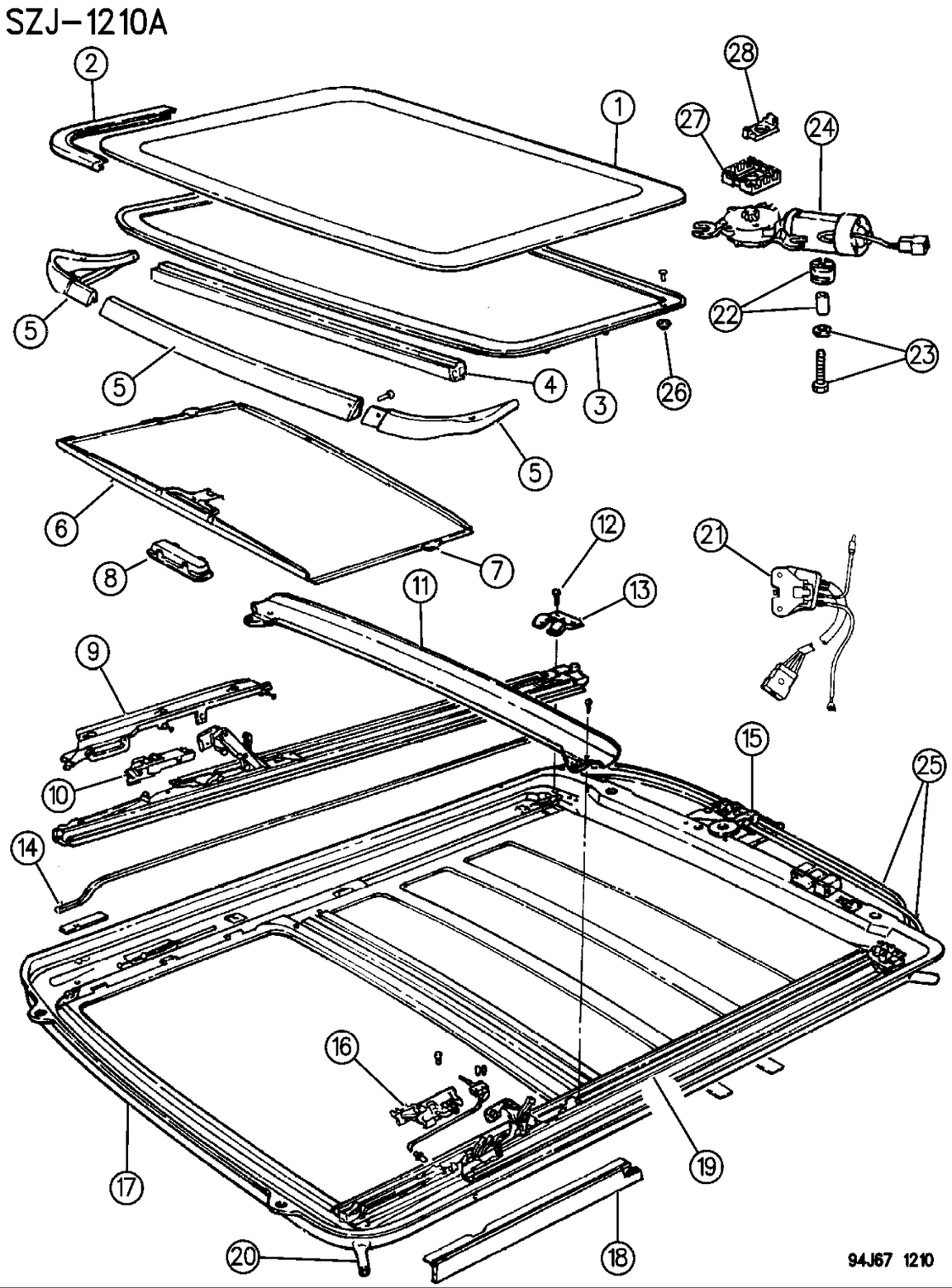

ITEM	PART NUMBER	QTY	BODY	MODEL	DESCRIPTION
1		1			GLASS ASSEMBLY ***
	5253 731				1994
	5507 6207				1995,96
2	4440 278	1			SEAL, (Serviced in Glass Assy.)
3		1			REINFORCEMENT, Serviced w/Glass Assy.
4		1			SUPPORT, Serviced w/Glass Assy.
5					DEFLECTOR ASSEMBLY, Wind ***
	4762 839	1			1994,95
	4856 567	1			1996
6					SUNSHADE ASSEMBLY ***
					1994,95
	5CF5 7MD5	1			Silver
	5CF5 7MF4	1			Light Driftwood
	5CF5 7MV4	1			Light Champagne
					1996
	5EN9 7SAZ	1			Agate
	5EN9 7SC1	1			Mist Gray
	5EN9 7ST6	1			Saddle
7	4440 277	2			CLIP, Sunshade Retainer
8		1			HANDLE, Serviced w/Sunshade Assembly
9	4440 274-5	1			BRACKET ASSEMBLY, Side Adjusting ***
-	5256 034	2			SCREW, Side Adjusting Bracket
-	5256 035	2			WASHER, Side Adjusting Bracket to Screw
10	4440 480	1			LOCATOR, Drive Cable Right ***
11	4440 273	1			CHANNEL ASSEMBLY, Drain ***
12		2			SCREW, Not Serviced
13		2			BRACKET, Not Serviced
14		1			SEAL, Drain, Serviced in Assy.
15	4762 791	1			CABLE & & BRACKET ASSY. Includes motor mount Bracket,
					clamps and drive tubes and cables) ***
16	5256 029	1			LOCATOR, Drive Cable w/Switch, Left ***
17	4740 344	1			TRAY ASSEMBLY ***
18					COVER ASSEMBLY, Mechanism ***
	4440 164-5	1			1994,95
	4856 664-5	1			1996
19					TRACK ASSY. ***
	4386 884	1			Right
	4874 360	1			Left
-	5256 018	8			SCREW, Track Assy. Mounting
20					HOSE, Sunroof Drain
	5507 4988	2			Front
					Rear

MODEL CODES:

72=2 DR Wagon
74=4 DR Wagon
77=Open Body 93" Whlbase
78=Open Body 103" Whlbase - Export
T=2WD
J,N=4WD
U=4WD (RHD)

BODY STYLES:

YJ=Wrangler (4X4) "S"
Weangler (4X4) SE
Wrangler (4X4) Sahara
Wrangler (4X4) Renegade
XJ=Cherokee SE
Cherokee Sport
Cherokee Country
ZJ=Grand Cherokee SE
Grand Cherokee Laredo
Grand Cherolee Limited
ZG=Grand Cherokee European
Y1=Wrangler
X1=Cherokee
Z1=Grand Cherokee
KDX=Vehicles

AR = Use as Required - = Non Illustrated Part P.A.R. = Paint as Required

SUNROOF COMPONENT PARTS GRAND CHEROKEE, ZJ
Figure SZJ-1210

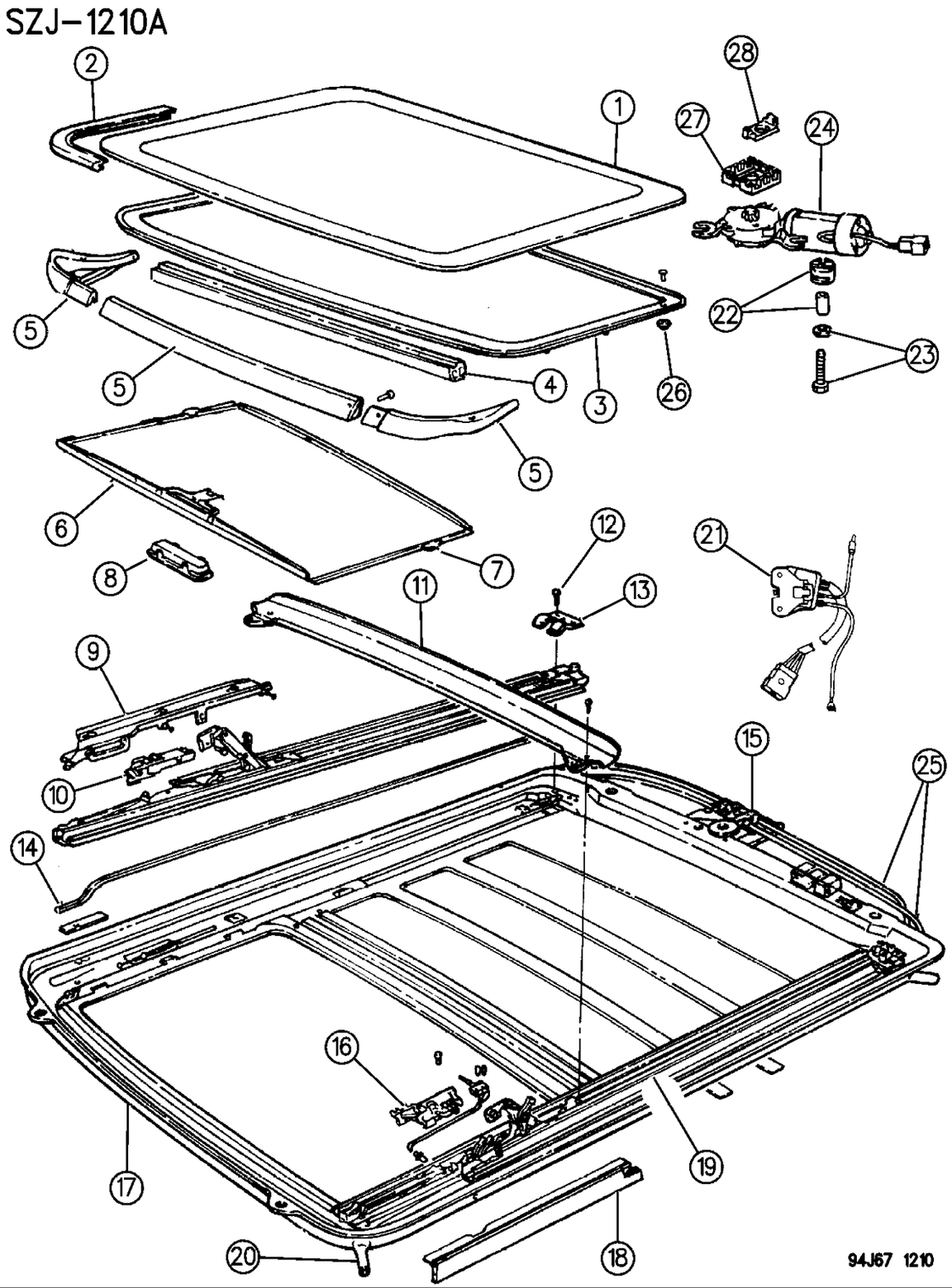

ITEM	PART NUMBER	QTY	BODY	MODEL	DESCRIPTION
	5507 4989	2			1994
	5507 6372	2			1995,96
-	4490 900	4			CLAMP, Sunroof Hose to Spout
-	5507 5179	2			PLUG and ADAPTER Assembly, Sunroof Drain Hose Rear ***
21	5256 025	1			RELAY, (includes bracket)
22	5256 019	3			SPACER ASSEMBLY, Motor Mounting ***
23	5256 021	3			SCREW and WASHER, Motor Mounting
24	4386 890	1			MOTOR ASSEMBLY, Sunroof ***
-	4728 172	1			INSERT, Bracket to Motor
25	4762 790	1			CABLE PACKAGE, Sunroof Drive Cables (right and left) ***
26	5256 024	6			NUT, Glass Assembly (M6x1)
27	4728 173	1			BRACKET, Serviced in item 15
28	4773 594	1			BRACKET, Clamping

MODEL CODES:

72=2 DR Wagon
74=4 DR Wagon
77=Open Body 93" Whlbase
78=Open Body 103" Whlbase - Export
T=2WD
J,N=4WD
U=4WD (RHD)

BODY STYLES:

YJ=Wrangler (4X4) "S"
Weangler (4X4) SE
Wrangler (4X4) Sahara
Wrangler (4X4) Renegade
XJ=Cherokee SE
Cherokee Sport
Cherokee Country
ZJ=Grand Cherokee SE
Grand Cherokee Laredo
Grand Cherolee Limited
ZG=Grand Cherokee European
Y1=Wrangler
X1=Cherokee
Z1=Grand Cherokee
KDX=Vehicles

AR = Use as Required - = Non Illustrated Part P.A.R. = Paint as Required

LIFT DOOR, LATCH AND HINGES GRAND CHEROKEE, ZJ
Figure SZJ-1350

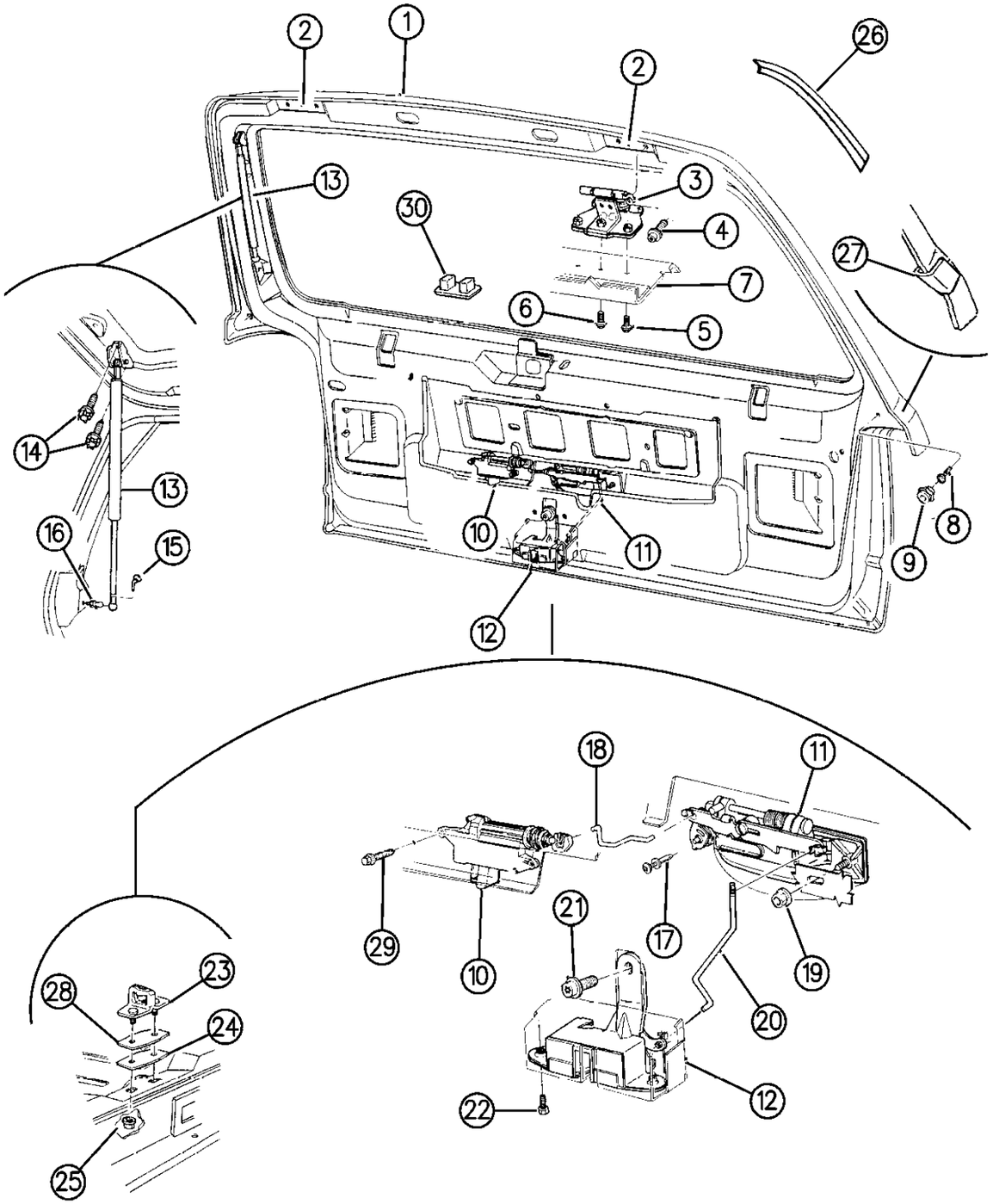

ITEM	PART NUMBER	QTY	BODY	MODEL	DESCRIPTION
1		1			DOOR, Lift
	5525 4852				1994-95, Up to 1-3-95
	5525 4683				1995, After 1-3-95
	5519 6457				1996, w/Flipper
	4886 289AA	1			1996, w/o Flipper
2	5525 4634-5	1			PLATE
3		2			HINGE
	4773 284				1994, Up to 1-3-95
	4796 432				1995,96, After 1-3-95
-	5507 4697	1			GASKET, (Also Serviced in Hinge Assy.)
4	6502 986	4			SCREW
5	6503 764	4			SCREW
6		2			SCREW
	6503 659				1994, M8x1.25x21.00
	6504 462				1995,96, M8x1.25x28.00
7					HEADER ASSY., Reference Only ***
8	6035 228	2			SCREW
9	5525 4847	2			BUMPER
10		1			ACTUATOR, Liftgate, Electric
	5515 4745				Up to 5-30-94
	5515 4974				After 5-30-94
	5529 5716				1996
11		1			HANDLE
	5507 5482				1994
	5507 6016				1995-96, w/o Flipper Glass
	5507 6391				1996, Handle & Switch, w/Flipper Glass
12					LATCH
	4741 386	1	ZJ		Up to 4-19-96
	4741 386	1	ZG		Up to 6-7-96
	4883 254	1	ZJ		After 4-19-96
	4883 254	1	ZG		After 6-7-96
	5600 5640	1			SWITCH, Security Alarm/Cargo Lamp
13		1			SUPPORT, Liftgate Gas Cylinder
	5507 4782-3				1994-95, Up to 1-3-95
	5507 5704-5				1995,96, After 1-3-95
14		4			SCREW, Not Serviced, M6x1.0x25
15					CLIP
	J367 9830	2			1994,95
	5529 5745	2			1996
16	5507 5205	2			BALL STUD ***
17					CLIP
	5507 5139	1			w/o Power

MODEL CODES:

72=2 DR Wagon
74=4 DR Wagon
77=Open Body 93" Whlbase
78=Open Body 103" Whlbase - Export
T=2WD
J,N=4WD
U=4WD (RHD)

BODY STYLES:

YJ=Wrangler (4X4) "S"
Weangler (4X4) SE
Wrangler (4X4) Sahara
Wrangler (4X4) Renegade
XJ=Cherokee SE
Cherokee Sport
Cherokee Country
ZJ=Grand Cherokee SE
Grand Cherokee Laredo
Grand Cherolee Limited
ZG=Grand Cherokee European
Y1=Wrangler
X1=Cherokee
Z1=Grand Cherokee
KDX=Vehicles

AR = Use as Required - = Non Illustrated Part P.A.R. = Paint as Required

LIFT DOOR, LATCH AND HINGES GRAND CHEROKEE, ZJ
Figure SZJ-1350

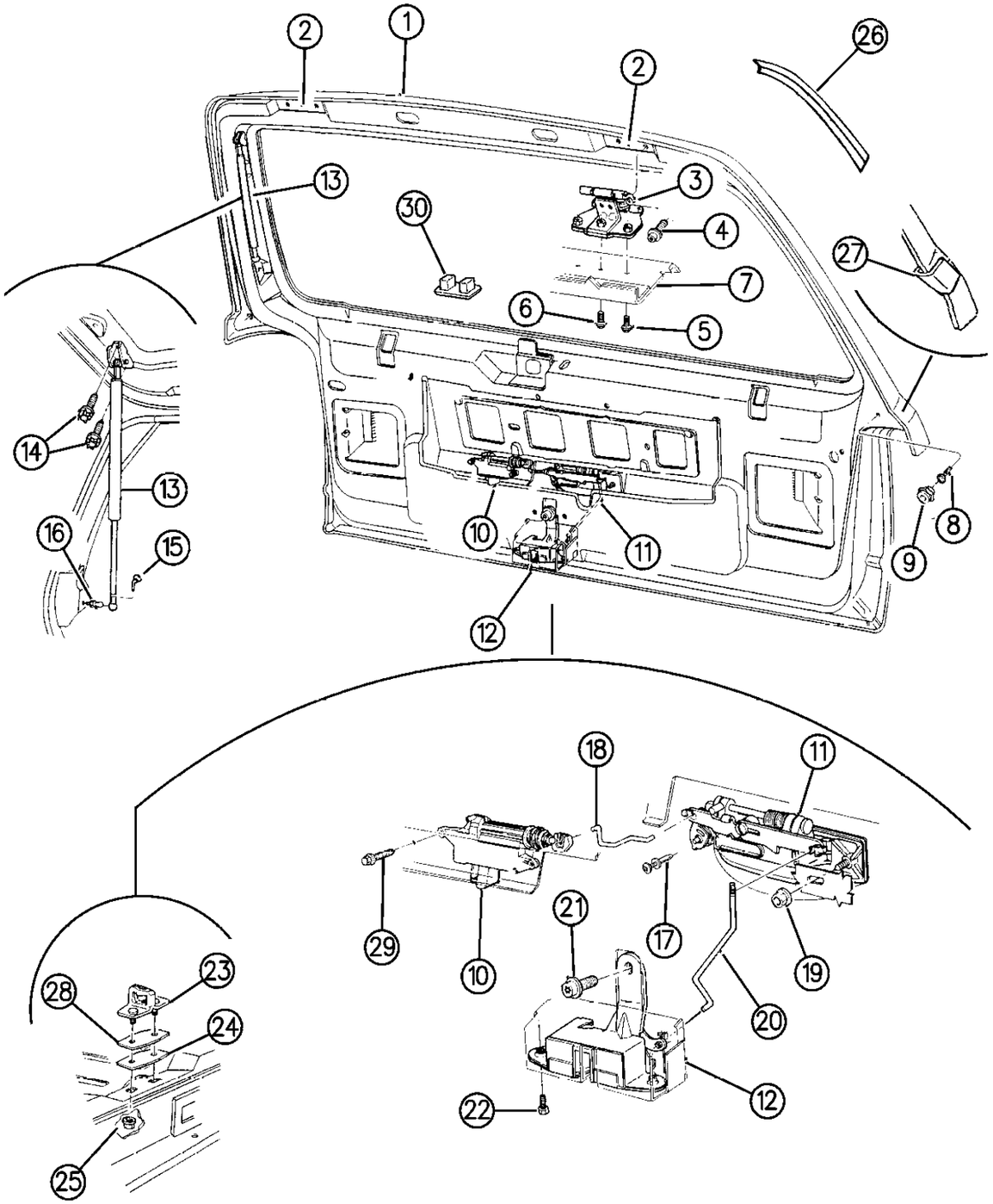

ITEM	PART NUMBER	QTY	BODY	MODEL	DESCRIPTION
	4658 677	1			w/Power
18		1			ROD, Acuator, Power Liftgate
	5515 4749				Up to 2-24-94
	5515 4981				After 2-24-94
	5507 6022				1995,96
19	6501 730	1			NUT, w/Washer
20	5503 1860	1			ROD, Liftgate Handle to Latch
21	6503 154	1			SCREW
22	6502 623	2			SCREW
23		1			STRIKER
	5507 5315				1994
	5507 5637		ZJ		1995,96, Up to 4-19-96
	5507 5637	1	ZG		1995-96, Up to 6-7-96
	5529 6077		ZJ		1996, After 6-7-96
	5529 6077		ZG		1996, After 6-7-96
24	5507 5320	1			PLATE, Striker Seal
25	6101 761	2			NUT
26	5502 9841	1			SEAL, Liftgate to Body
27	5529 5615	2			STRIP, Liftgate Edge Protector
28	5507 5677	1			SEAL, Striker Plate
29		2			SCREW, Not Serviced, .250-14x.750
30	5600 7242	1			PLUG, Flip Up Glass
-	6035 029	4			SCREW, Attach License Plate

MODEL CODES:

72=2 DR Wagon
74=4 DR Wagon
77=Open Body 93" Whlbase
78=Open Body 103" Whlbase - Export
T=2WD
J,N=4WD
U=4WD (RHD)

BODY STYLES:

YJ=Wrangler (4X4) "S"
Weangler (4X4) SE
Wrangler (4X4) Sahara
Wrangler (4X4) Renegade
XJ=Cherokee SE
Cherokee Sport
Cherokee Country
ZJ=Grand Cherokee SE
Grand Cherokee Laredo
Grand Cherolee Limited
ZG=Grand Cherokee European
Y1=Wrangler
X1=Cherokee
Z1=Grand Cherokee
KDX=Vehicles

AR = Use as Required - = Non Illustrated Part P.A.R. = Paint as Required

ROOF RACK GRAND CHEROKEE, ZJ
Figure SZJ-1630

SZJ-1630

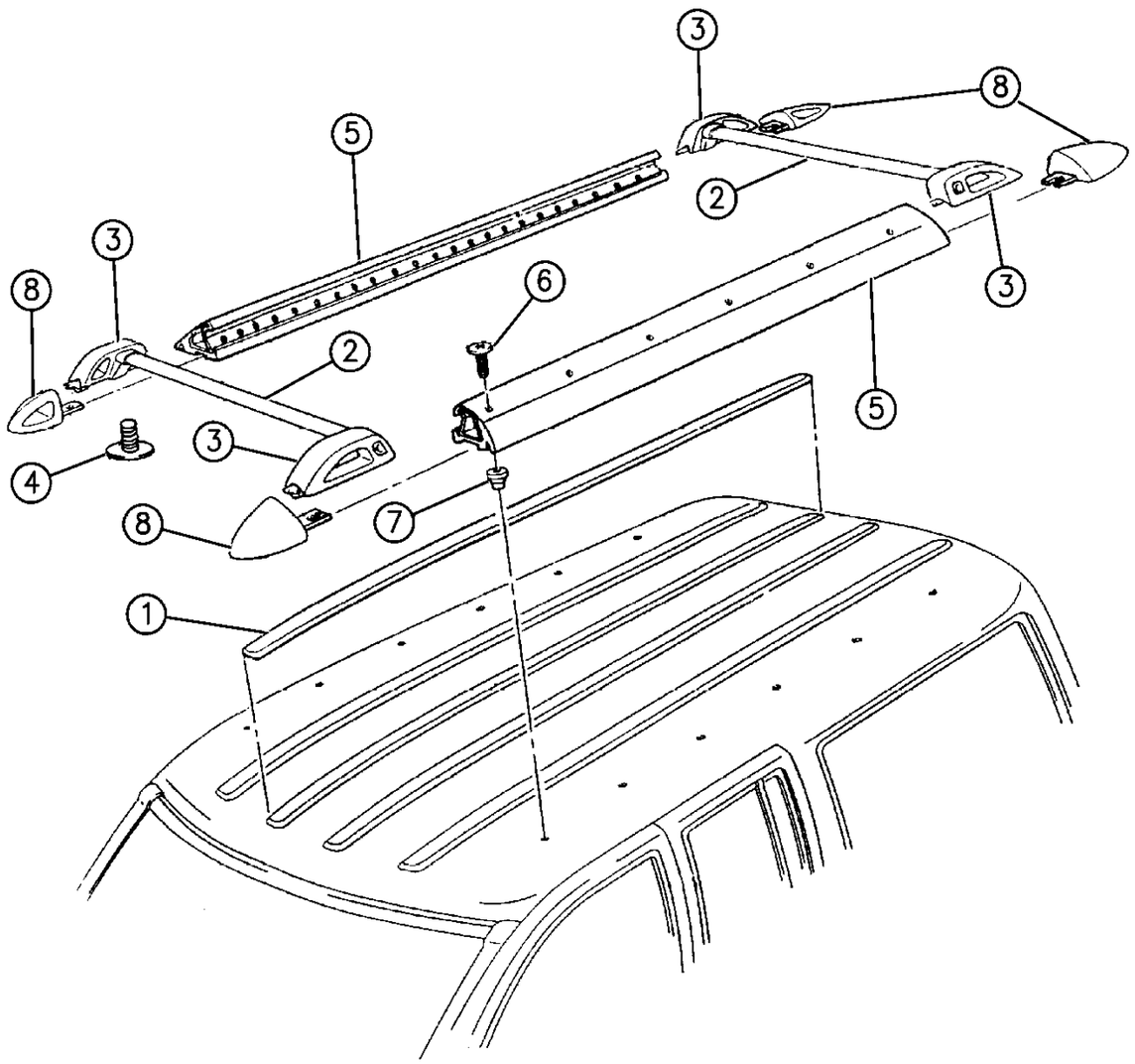

94J67 1630

ITEM	PART NUMBER	QTY	BODY	MODEL	DESCRIPTION
1	5507 5107	4			SKID STRIP, Stick On
2	4762 625	2			CROSS RAIL ***
3		2			STANCHION
	5507 4888-9				1994
	5507 6028-9				1995,96
4					SCREW, Cross Rail to Stanchion
	5507 4653	2			1994
	6035 499	2			1995,96
5	5507 5759	2			RAIL, Roof to Side
6	6502 667	12			SCREW
7					RIVET NUT ***
	6502 751	12			1994,95
	6504 363	12			1996
8	5507 5918-9	2			END CAP

MODEL CODES:

72=2 DR Wagon
74=4 DR Wagon
77=Open Body 93" Whlbase
78=Open Body 103" Whlbase - Export
T=2WD
J,N=4WD
U=4WD (RHD)

BODY STYLES:

YJ=Wrangler (4X4) "S"
Weangler (4X4) SE
Wrangler (4X4) Sahara
Wrangler (4X4) Renegade
XJ=Cherokee SE
Cherokee Sport
Cherokee Country
ZJ=Grand Cherokee SE
Grand Cherokee Laredo
Grand Cherolee Limited
ZG=Grand Cherokee European
Y1=Wrangler
X1=Cherokee
Z1=Grand Cherokee
KDX=Vehicles

AR = Use as Required - = Non Illustrated Part P.A.R. = Paint as Required

« RETURN TO GROUP INDEX

GROUP-DYJ
DOORS AND RELATED PARTS

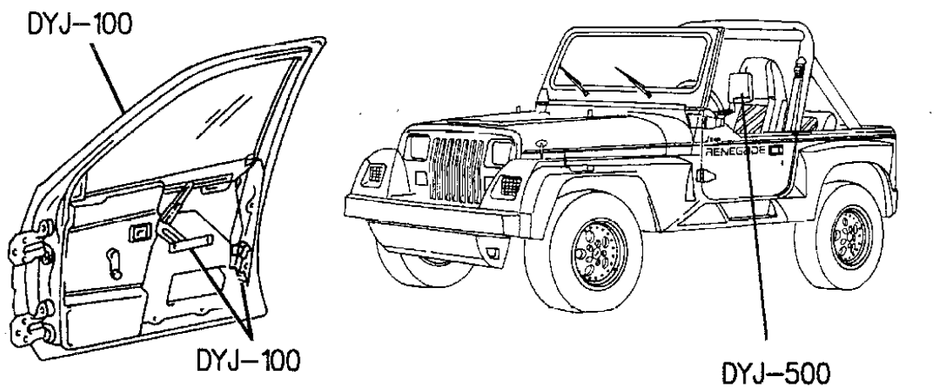

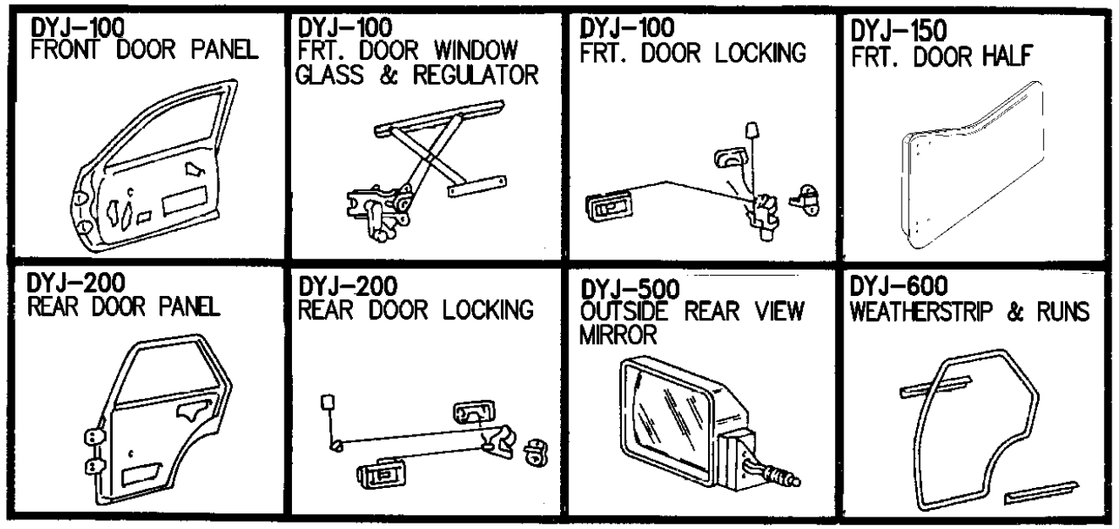

GROUP DYJ - DOORS & RELATED PARTS WRANGLER

ILLUSTRATION TITLE	GROUP-FIG. NO.
DOOR, FRONT, FULL	
DOOR, FRONT, FULL SHELL AND HINGES WRANGLER YJ	Fig. DYJ-110
DOOR, FRONT, FULL GLASS AND REGULATORS WRANGLER YJ	Fig. DYJ-120
DOOR, FRONT, FULL LOCK AND CONTROLS WRANGLER YJ	Fig. DYJ-130
DOOR, FRONT, HALF	
DOOR, FRONT, HALF SHELL AND HINGES WRANGLER YJ	Fig. DYJ-160
DOOR, FRONT, HALF LOCK AND CONTROLS WRANGLER YJ	Fig. DYJ-180
DOOR, REAR	
DOOR, REAR, WORLD CAB SHELL AND HINGES WRANGLER Y1	Fig. DYJ-210
DOOR, REAR, WORLD CAB LOCK AND CONTROLS WRANGLER Y1	Fig. DYJ-230
MIRRORS, EXTERIOR	
MIRRORS, EXTERIOR WRANGLER YJ	Fig. DYJ-510
WEATHERSTRIPS	
DOOR, FRONT AND REAR WEATHERSTRIPS AND SEALS WRANGLER YJ	Fig. DYJ-610

DOOR, FRONT, FULL SHELL AND HINGES WRANGLER YJ
Figure DYJ-110

DYJ-110C

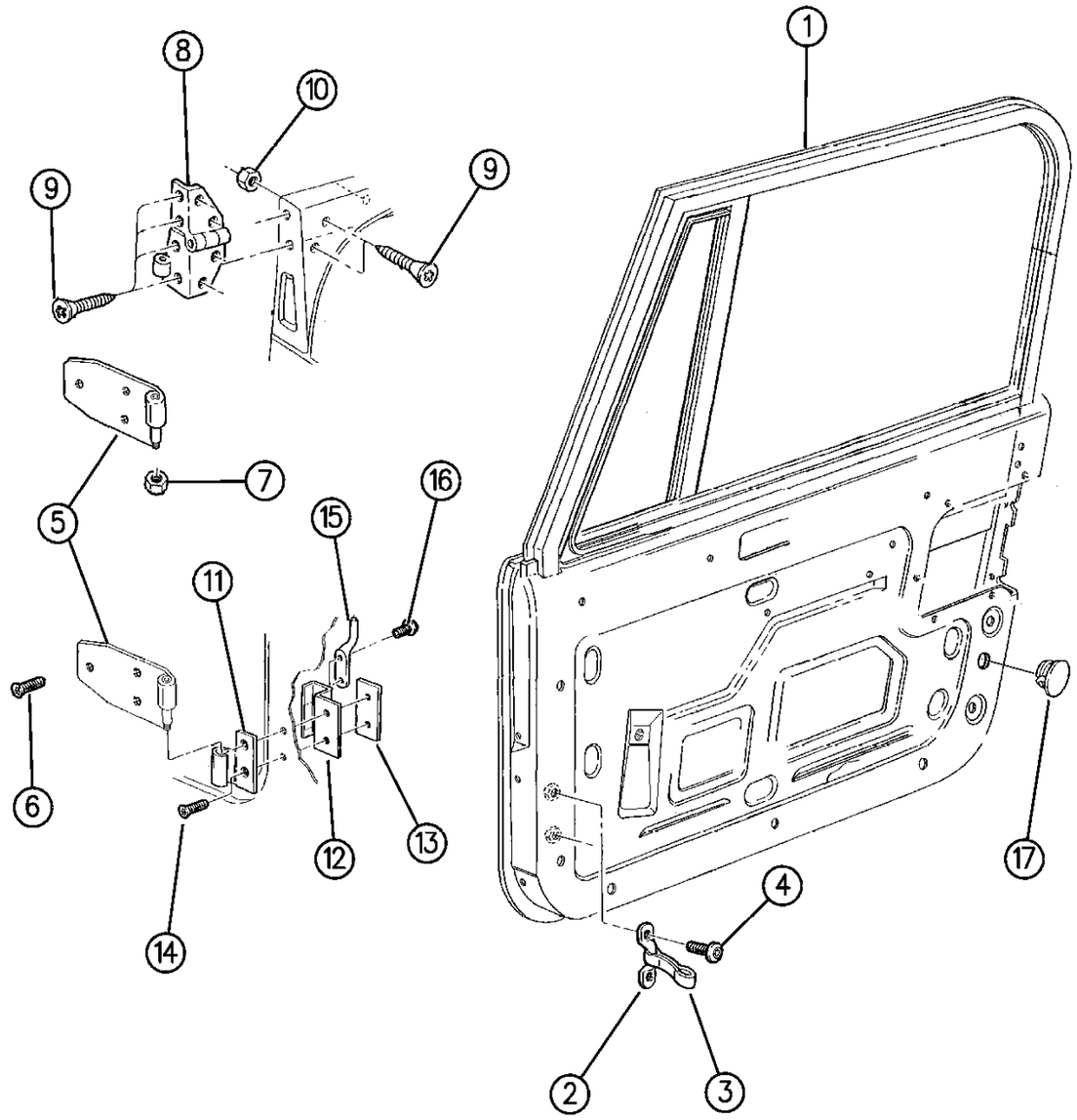

94J68 110

ITEM	PART NUMBER	QTY	BODY	MODEL	DESCRIPTION
					COMPLETE DOOR ASSEMBLY ***
	4762 302-3	1			1994
	4796 670-1	1			1995
1					SHELL, Door ***
	5534 6202-3	1			1994
	5517 5130-1	1			1995
	5534 6210-1	1			w/World Cab, 1994
	5517 5162-3	1			w/World Cab, 1995
					PANEL, Repair
	5534 6204-5	1			
2	5501 3666	2			LOOP, Footman ***
3	J545 9207	2			STRAP, Restraint
4		AR			SCREW, Footman Loop, (Not Serviced)
5					HINGE, Door Half
	5507 5604-5	1			Upper
	5507 4854-5	1			Lower
6	J400 4956	AR			SCREW, Hinge
7	J400 5755	2			NUT, Upper Hinge Pin
8	5507 4880-1	1			HINGE, Body Half Upper
9	J400 4956	AR			SCREW, Hinge
10	J012 0376	AR			NUT, Hinge
11	5507 4864-5	2			HINGE, Body Half, Lower
12	J545 9280	2			BRACKET, Hinge Restraint Pin
13		2			PLATE, HINGE, (Not Serviced)
14		4			SCREW, Hinge, (Not Serviced)
15	J545 9286	2			PIN, Restraint Strap
16	6035 057	4			SCREW, Restraint Strap Pin
17	J400 4949	4			PLUG

MODEL CODES:

72=2 DR Wagon
74=4 DR Wagon
77=Open Body 93" Whlbase
78=Open Body 103" Whlbase - Export
T=2WD
J,N=4WD
U=4WD (RHD)

BODY STYLES:

YJ=Wrangler (4X4) "S"
Weangler (4X4) SE
Wrangler (4X4) Sahara
Wrangler (4X4) Renegade
XJ=Cherokee SE
Cherokee Sport
Cherokee Country
ZJ=Grand Cherokee SE
Grand Cherokee Laredo
Grand Cherolee Limited
ZG=Grand Cherokee European
Y1=Wrangler
X1=Cherokee
Z1=Grand Cherokee
KDX=Vehicles

AR = Use as Required - = Non Illustrated Part P.A.R. = Paint as Required

« RETURN TO GROUP INDEX

DOOR, FRONT, FULL GLASS AND REGULATORS WRANGLER YJ
Figure DYJ-120

DYJ-120B

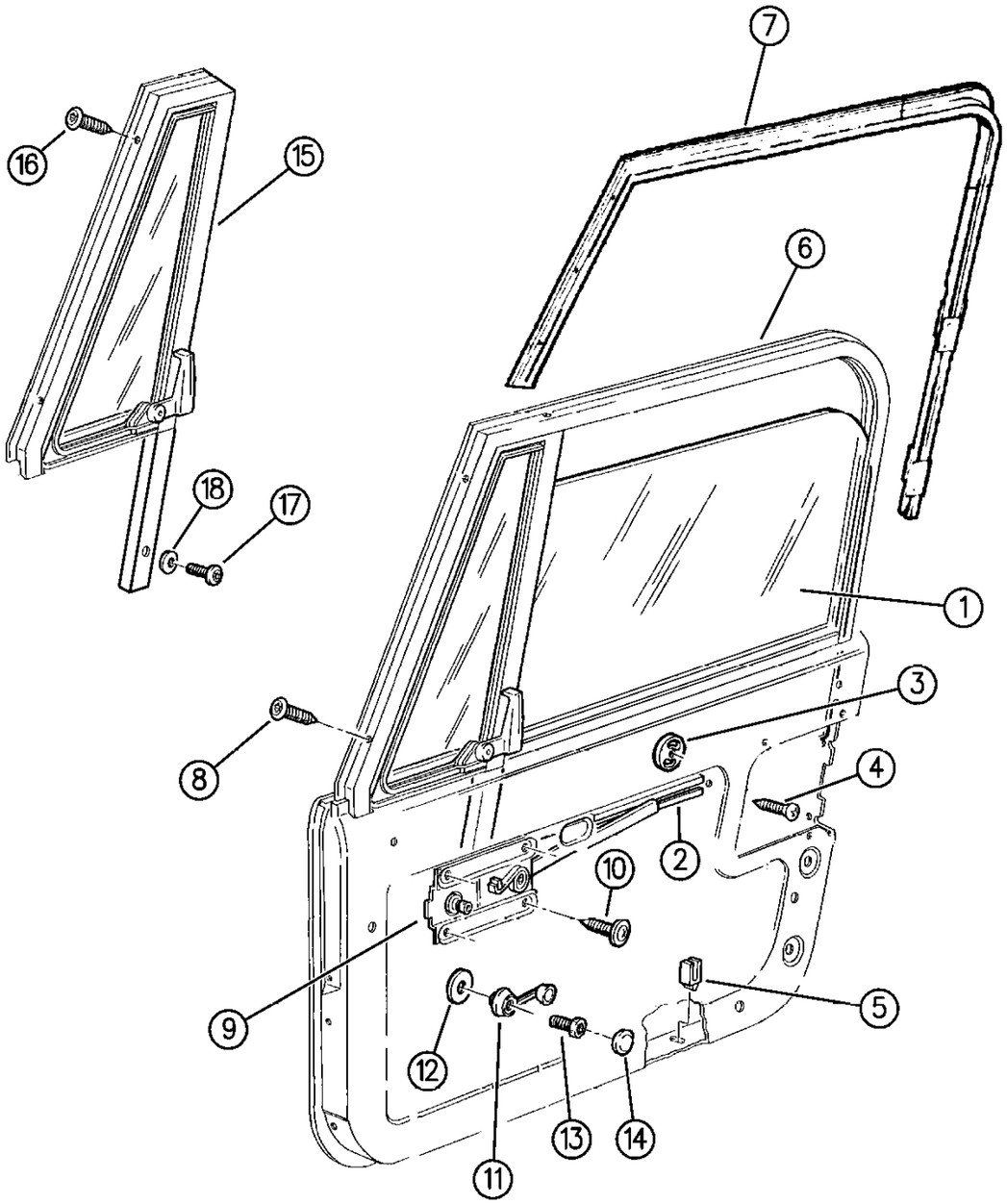

ITEM	PART NUMBER	QTY	BODY	MODEL	DESCRIPTION
1					GLASS, Door
	5502 2404-5	1			Tinted
	J556 7898	1			Right, w/World Cab
	J556 7897	1			Left, w/World Cab
2	J545 4156	2			GUIDE, Regulator Arm
3	J400 3706	4			GROMMET, Lift Plate
4	6035 224	8			SCREW, Guide
5	J576 4621	2			BUMPER, Stop
6					FRAME, Door Glass
	5503 4392-3	1			w/o World Cab
	5503 4394-5	1			w/World Cab
7	J545 7057	2			CHANNEL, Glass
8	6035 049	2			SCREW, Frame
9	5507 4990-1	1			REGULATOR, Glass ***
10	6035 279	AR			SCREW, Regulator
11	4415 820	2			HANDLE, Window Regulator
12	4445 993	2			SPACER, Handle
13		2			SCREW, Handle, (Not Serviced)
14	4415 824	2			COVER, Handle Screw
15	5513 4608-9				WINDOW ASSEMBLY, Vent, Tinted ***
16	6035 214	AR			SCREW
17	6035 215	AR			SCREW
18	J012 0386	2			WASHER

MODEL CODES:

72=2 DR Wagon
74=4 DR Wagon
77=Open Body 93" Whlbase
78=Open Body 103" Whlbase - Export
T=2WD
J,N=4WD
U=4WD (RHD)

BODY STYLES:

YJ=Wrangler (4X4) "S"
Weangler (4X4) SE
Wrangler (4X4) Sahara
Wrangler (4X4) Renegade
XJ=Cherokee SE
Cherokee Sport
Cherokee Country
ZJ=Grand Cherokee SE
Grand Cherokee Laredo
Grand Cherolee Limited
ZG=Grand Cherokee European
Y1=Wrangler
X1=Cherokee
Z1=Grand Cherokee
KDX=Vehicles

AR = Use as Required - = Non Illustrated Part P.A.R. = Paint as Required

« RETURN TO GROUP INDEX

DOOR, FRONT, FULL LOCK AND CONTROLS WRANGLER YJ
Figure DYJ-130

DYJ-130A

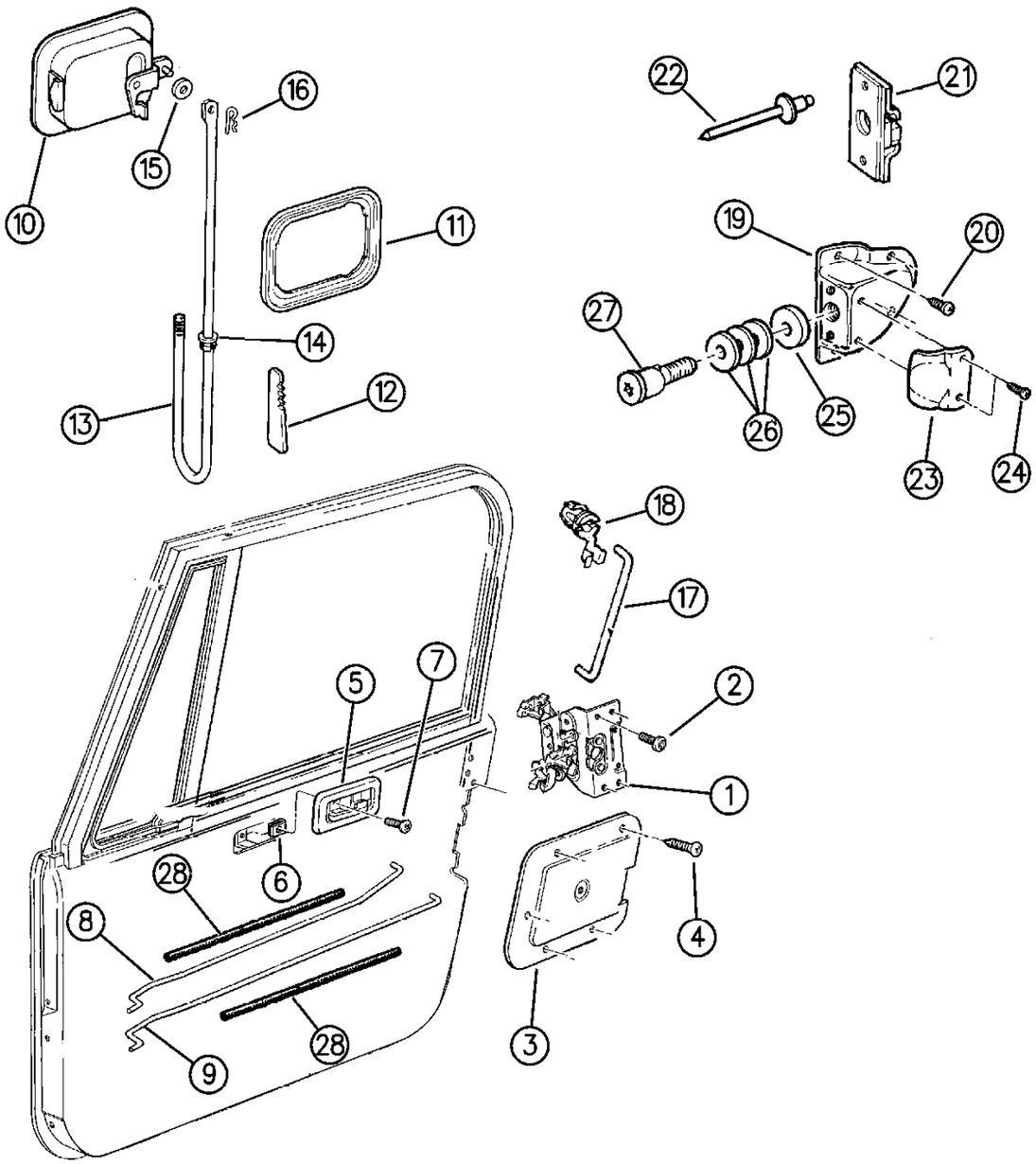

94J68 130

ITEM	PART NUMBER	QTY	BODY	MODEL	DESCRIPTION
1	5507 4948-9	1			LATCH, Door
2	J400 6874	AR			SCREW, Latch
3					COVER, Latch
	5534 4730-1	1			Up To 4-5-94
	5507 5966-7	1			After 4-5-94
4	J448 9487	AR			SCREW, Latch Cover
5	5502 9578-9	1			HANDLE, Remote Control
6	6035 056	2			U-NUT, Handle
7	J400 6870	2			SCREW, Handle
8	5507 4670-1	1			ROD, Locking Lever to Latch
9	5507 4672-3	1			ROD, Release Lever to Latch
10					HANDLE, O/S Door
	5502 8446-7	1			1994
	5507 6222-3	1			1995
55076222 Supersedes to 55176383 and 55076223 supersedes to 55176382. e Adhesive #312.					
11	J575 8174	2			GASKET, O/S Handle
12	J575 8175	4			KEEPER, O/S Handle ***
13	5507 4674-5	1			ROD, O/S Handle to Latch
14		2			BUSHING, Rod, (Not Serviced)
15	3420 1846	2			WASHER. Latch Rod ***
16	J400 5122	AR			PIN, Latch Rod
17					ROD, Lock Cylinder to Latch
	5502 6850	2			1994
	5507 6010	2			1995
18	J400 4532	2			CLIP, Lock Cylinder Rod
19					COVER, Striker
	5502 9454-5	1			Up To, 9-20-94
	5507 6328-9	1			After, 9-20-94
20	6035 004	4			SCREW, Striker Cover
21	J575 8194	2			PLATE, Tapping
22	J400 2185	4			RIVET, Tapping Plate
23	5502 9453	2			PROTECTOR, Striker
24	6035 004	4			SCREW, Striker Protector
25	5507 4800	2			WASHER, Striker
26	5503 3620	AR			WASHER, Striker Shim
27					PIN, Striker
	5534 4721	2			Up To 3-24-94
	5507 6217	2			After 3-24-94
28	3502 3980	4			SLEEVE, Anti-Rattle

MODEL CODES:

72=2 DR Wagon
74=4 DR Wagon
77=Open Body 93" Whlbase
78=Open Body 103" Whlbase - Export
T=2WD
J,N=4WD
U=4WD (RHD)

BODY STYLES:

YJ=Wrangler (4X4) "S"
Weangler (4X4) SE
Wrangler (4X4) Sahara
Wrangler (4X4) Renegade
XJ=Cherokee SE
Cherokee Sport
Cherokee Country
ZJ=Grand Cherokee SE
Grand Cherokee Laredo
Grand Cherolee Limited
ZG=Grand Cherokee European
Y1=Wrangler
X1=Cherokee
Z1=Grand Cherokee
KDX=Vehicles

AR = Use as Required - = Non Illustrated Part P.A.R. = Paint as Required

« RETURN TO GROUP INDEX

DOOR, FRONT, HALF SHELL AND HINGES WRANGLER YJ
Figure DYJ-160

DYJ–160

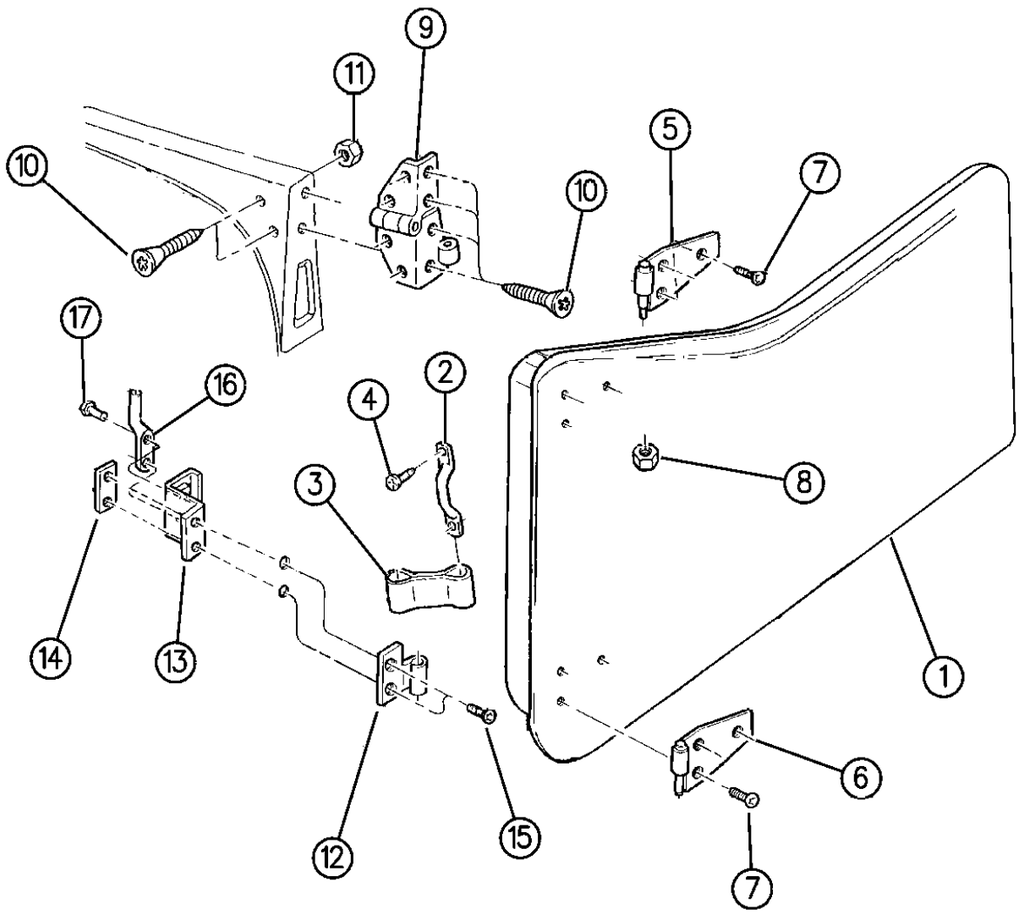

94J68 160

ITEM	PART NUMBER	QTY	BODY	MODEL	DESCRIPTION
	8220 1809	1			DOOR KIT, For Converting To 1/2 Hard Doors From Full
					Doors. Includes Right and Left Doors, w/Handles, Latches,
					Mirrors, Hinges, Seals and Hardware.***
1					SHELL, Door ***
	5534 5414-5	1			1994
	5517 5124-5	1			1995
	5534 5540-1	1			PANEL, Repair
2	5501 3666	2			LOOP, Footman ***
3	J545 9207	2			STRAP, Restraint
4		4			SCREW, Footman Loop, (Not Serviced)
5					HINGE, Door Half, Upper
					Right
	5507 4862	1			w/o Right Mirror
	5507 5128	1			w/Right Mirror
	5507 5129	1			Left
6	5507 4854-5	1			HINGE, Door Half, Lower
7	J400 4956	AR			SCREW, Hinge
8	J400 5755	2			NUT, Upper Hinge Pin
9	5507 4880-1	1			HINGE, Body Half, Upper
10	J400 4956	AR			SCREW, Hinge
11	J012 0376	AR			NUT, Hinge
12	5507 4864-5	1			HINGE, Body Half, Lower
13	J545 9280-1	2			Bracket, Hinge ***
14	J545 9281	2			PLATE, Hinge
15	J400 4956	4			SCREW, Hinge
16	J545 9286	2			PIN, Restraint Strap
17	6035 057	4			SCREW, Restraint Strap Pin

MODEL CODES:

72=2 DR Wagon
74=4 DR Wagon
77=Open Body 93" Whlbase
78=Open Body 103" Whlbase - Export
T=2WD
J,N=4WD
U=4WD (RHD)

BODY STYLES:

YJ=Wrangler (4X4) "S"
Weangler (4X4) SE
Wrangler (4X4) Sahara
Wrangler (4X4) Renegade
XJ=Cherokee SE
Cherokee Sport
Cherokee Country
ZJ=Grand Cherokee SE
Grand Cherokee Laredo
Grand Cherolee Limited
ZG=Grand Cherokee European
Y1=Wrangler
X1=Cherokee
Z1=Grand Cherokee
KDX=Vehicles

AR = Use as Required - = Non Illustrated Part P.A.R. = Paint as Required

« RETURN TO GROUP INDEX

DOOR, FRONT, HALF LOCK AND CONTROLS WRANGLER YJ
Figure DYJ-180

DYJ-180

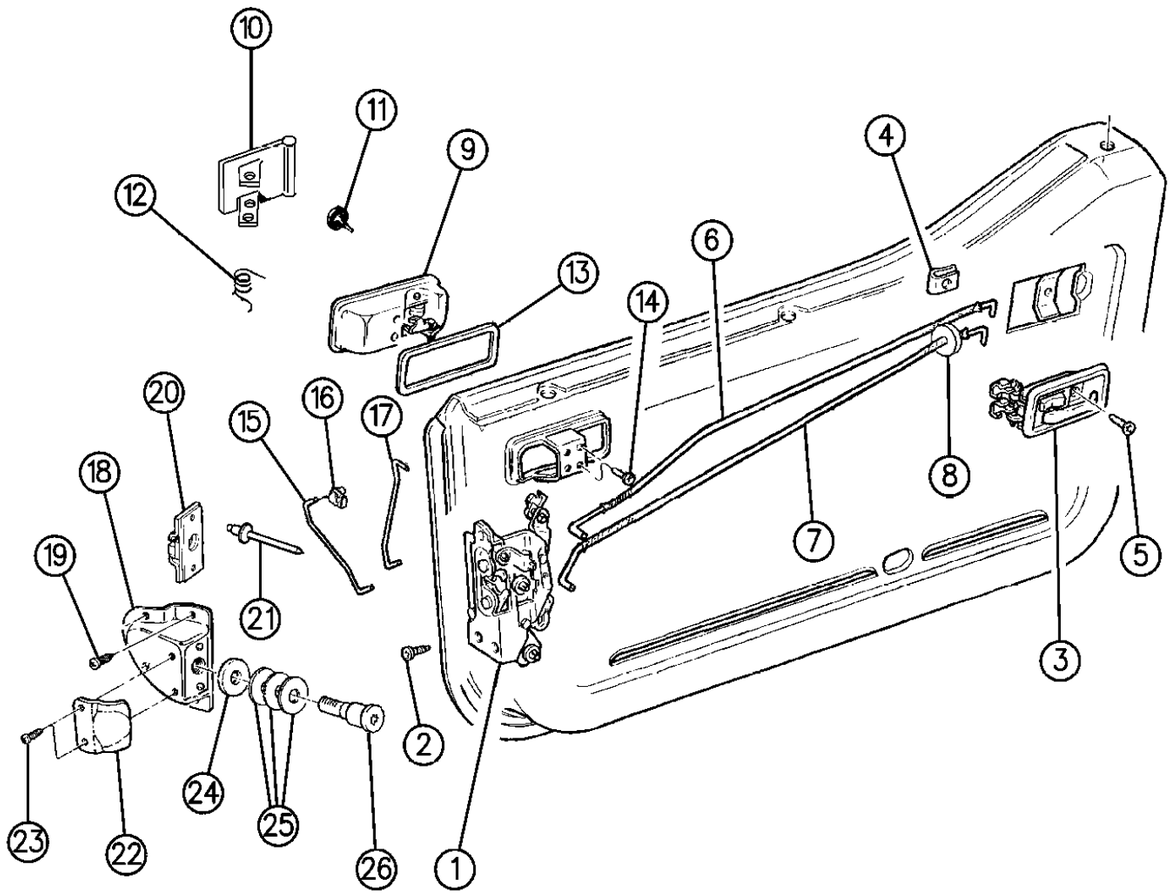

94J68 180

ITEM	PART NUMBER	QTY	BODY	MODEL	DESCRIPTION
1	5507 4950-1	1			LATCH, Door
2	J400 6874	6			SCREW, Latch
3	5502 9578-9	1			HANDLE, Remote Control
4	J149 4251	2			NUT, Handle
5	J400 6870	2			SCREW, Handle
6					ROD, Locking Lever To Latch
	5507 4770-1	1			Up To 2-14-94
	5507 5888-9	1			After 2-14-94
7					ROD, Release Lever to Latch
	5507 4774-5	1			Up To 2-14-94
	5507 5890-1	1			After 2-14-94
8	5507 4657	2			SILENCER, Lock and Release Rod
9					HANDLE ASSEMBLY, O/S Door
	5507 5882	1			Right
	5507 5883	1			Left
10					HANDLE, O/S
	5500 8902	1			Right
	5501 5315	1			Left
11	J400 3110	2			BUMPER, Handle
12	J363 1218-9	1			SPRING, Return
13	J374 3608	2			SEAL, O/S Handle
14	6034 980	4			SCREW, O/S Handle
15					ROD, O/S Handle To Latch
	5507 4776-7	1			Up To 3-22-94
	5507 5886-7	1			After 3-22-94
16					RETAINER, O/S Handle to Latch
	J400 3673	AR			Black
	J400 3672	AR			White
17					ROD, Lock Cylinder To Latch
	5502 6852-3	1			1994
	5507 6012-3	1			1995
18					COVER, Striker
	5502 9454-5	1			Up To, 9-20-94
	5507 6328-9	1			After, 9-20-94
19	6035 004	8			SCREW, Striker Cover
20	J575 8194	2			PLATE, Tapping
21	J400 2185	4			RIVET, Tapping Plate
22	5502 9453	2			PROTECTOR, Striker
23	6035 004	AR			SCREW, Striker Protector
24	5507 4800	2			WASHER, Striker
25	5503 3620	AR			WASHER, Striker Shim
26					PIN, Striker

MODEL CODES:

72=2 DR Wagon
74=4 DR Wagon
77=Open Body 93" Whlbase
78=Open Body 103" Whlbase - Export
T=2WD
J,N=4WD
U=4WD (RHD)

BODY STYLES:

YJ=Wrangler (4X4) "S"
Weangler (4X4) SE
Wrangler (4X4) Sahara
Wrangler (4X4) Renegade
XJ=Cherokee SE
Cherokee Sport
Cherokee Country
ZJ=Grand Cherokee SE
Grand Cherokee Laredo
Grand Cherolee Limited
ZG=Grand Cherokee European
Y1=Wrangler
X1=Cherokee
Z1=Grand Cherokee
KDX=Vehicles

AR = Use as Required - = Non Illustrated Part P.A.R. = Paint as Required

DOOR, FRONT, HALF LOCK AND CONTROLS WRANGLER YJ
Figure DYJ-180

DYJ-180

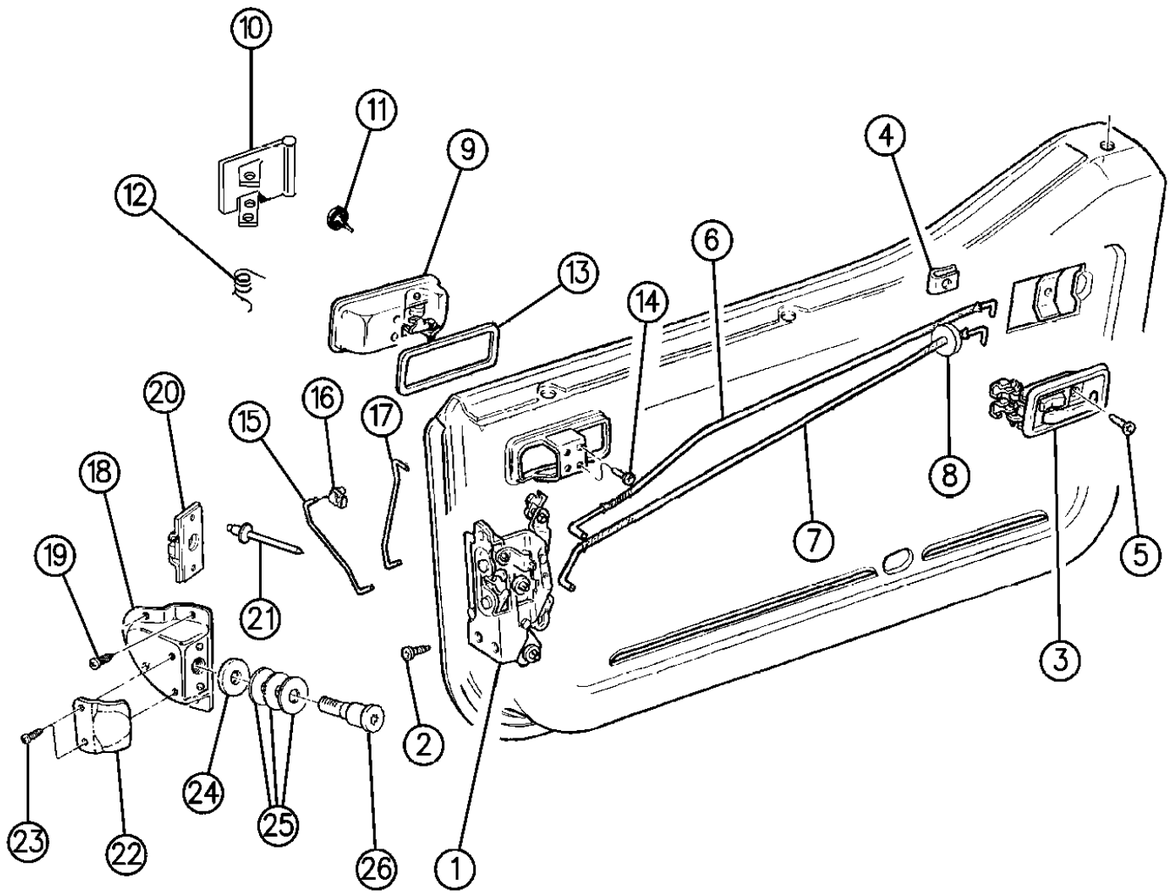

94J68 180

ITEM	PART NUMBER	QTY	BODY	MODEL	DESCRIPTION
	5534 4721	2			Up To 3-24-94
	5507 6217	1			After 3-24-94

MODEL CODES:

72=2 DR Wagon
74=4 DR Wagon
77=Open Body 93" Whlbase
78=Open Body 103" Whlbase - Export
T=2WD
J,N=4WD
U=4WD (RHD)

BODY STYLES:

YJ=Wrangler (4X4) "S"
Weangler (4X4) SE
Wrangler (4X4) Sahara
Wrangler (4X4) Renegade

XJ=Cherokee SE
Cherokee Sport
Cherokee Country

ZJ=Grand Cherokee SE
Grand Cherokee Laredo
Grand Cherolee Limited
ZG=Grand Cherokee European

Y1=Wrangler
X1=Cherokee
Z1=Grand Cherokee
KDX=Vehicles

AR = Use as Required - = Non Illustrated Part P.A.R. = Paint as Required

DOOR, REAR, WORLD CAB SHELL AND HINGES WRANGLER Y1
Figure DYJ-210

DYJ-210

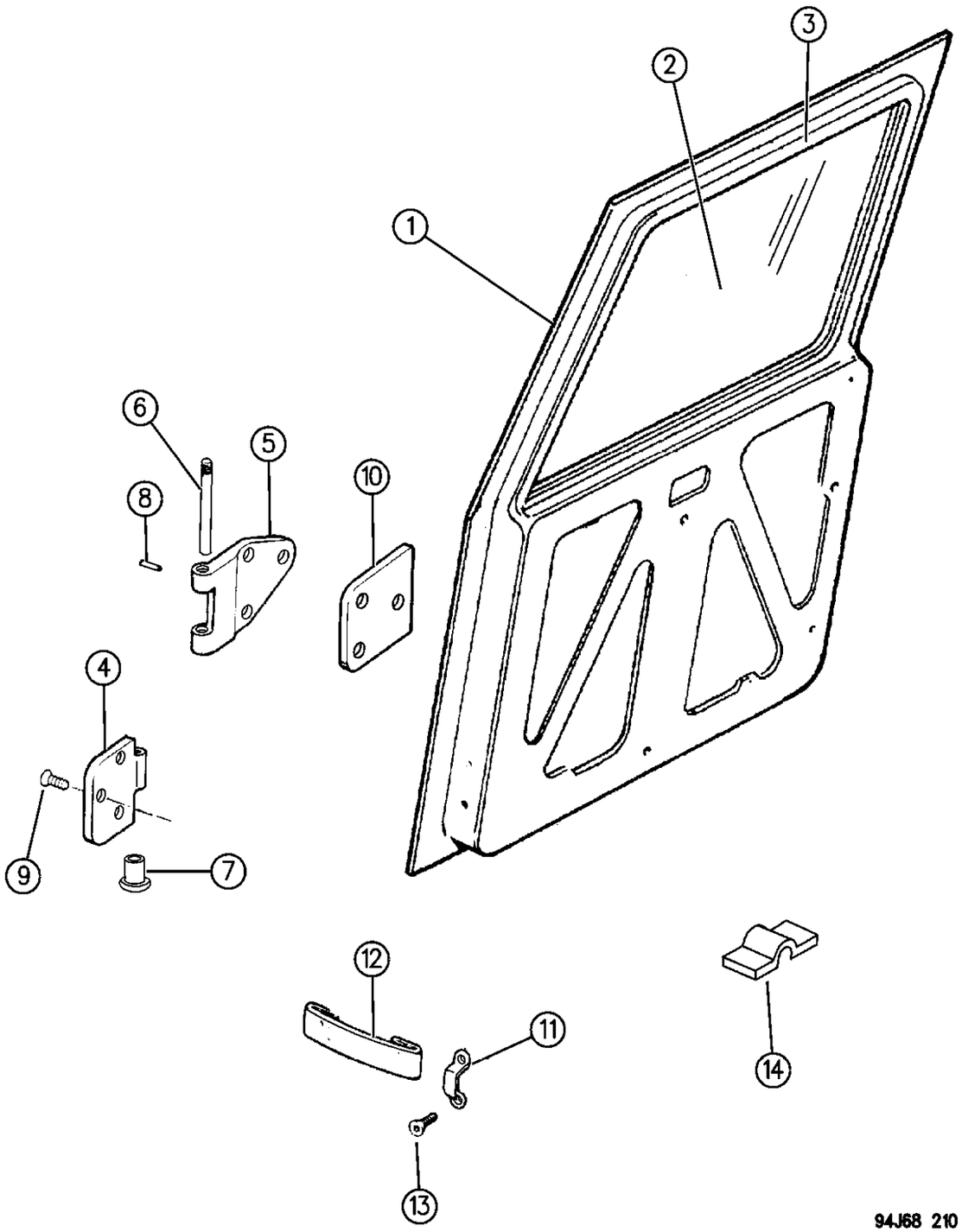

ITEM	PART NUMBER	QTY	BODY	MODEL	DESCRIPTION
1	5517 5162-3	1			DOOR ASSEMBLY ***
		1			SHELL, Door, (Purchased Locally) ***
2	J805 2574	1			GLASS, Door, Tinted
3	J805 2122	1			SEAL, Glass
4	J805 2160	2			HINGE, Door Half
5	J805 2161	2			HINGE, Body Half
6	J805 2194	2			PIN, Hinge
7	J805 2193	4			BEARING, Hinge
8	J027 3936	2			PIN, Lock
9	J400 5831	AR			SCREW, Hinge
10	J805 2037	2			PLATE, Hinge Tapping
11	5501 3666	2			LOOP, Footman ***
12	J545 9207	1			STRAP, Footman Loop
13	J400 7088	4			SCREW, Footman Loop
14	J805 3241	2			CLIP, Drain

MODEL CODES:

72=2 DR Wagon
74=4 DR Wagon
77=Open Body 93" Whlbase
78=Open Body 103" Whlbase - Export
T=2WD
J,N=4WD
U=4WD (RHD)

BODY STYLES:

YJ=Wrangler (4X4) "S"
Weangler (4X4) SE
Wrangler (4X4) Sahara
Wrangler (4X4) Renegade
XJ=Cherokee SE
Cherokee Sport
Cherokee Country
ZJ=Grand Cherokee SE
Grand Cherokee Laredo
Grand Cherolee Limited
ZG=Grand Cherokee European
Y1=Wrangler
X1=Cherokee
Z1=Grand Cherokee
KDX=Vehicles

AR = Use as Required - = Non Illustrated Part P.A.R. = Paint as Required

« RETURN TO GROUP INDEX

DOOR, REAR, WORLD CAB LOCK AND CONTROLS WRANGLER Y1
Figure DYJ-230

DYJ–230

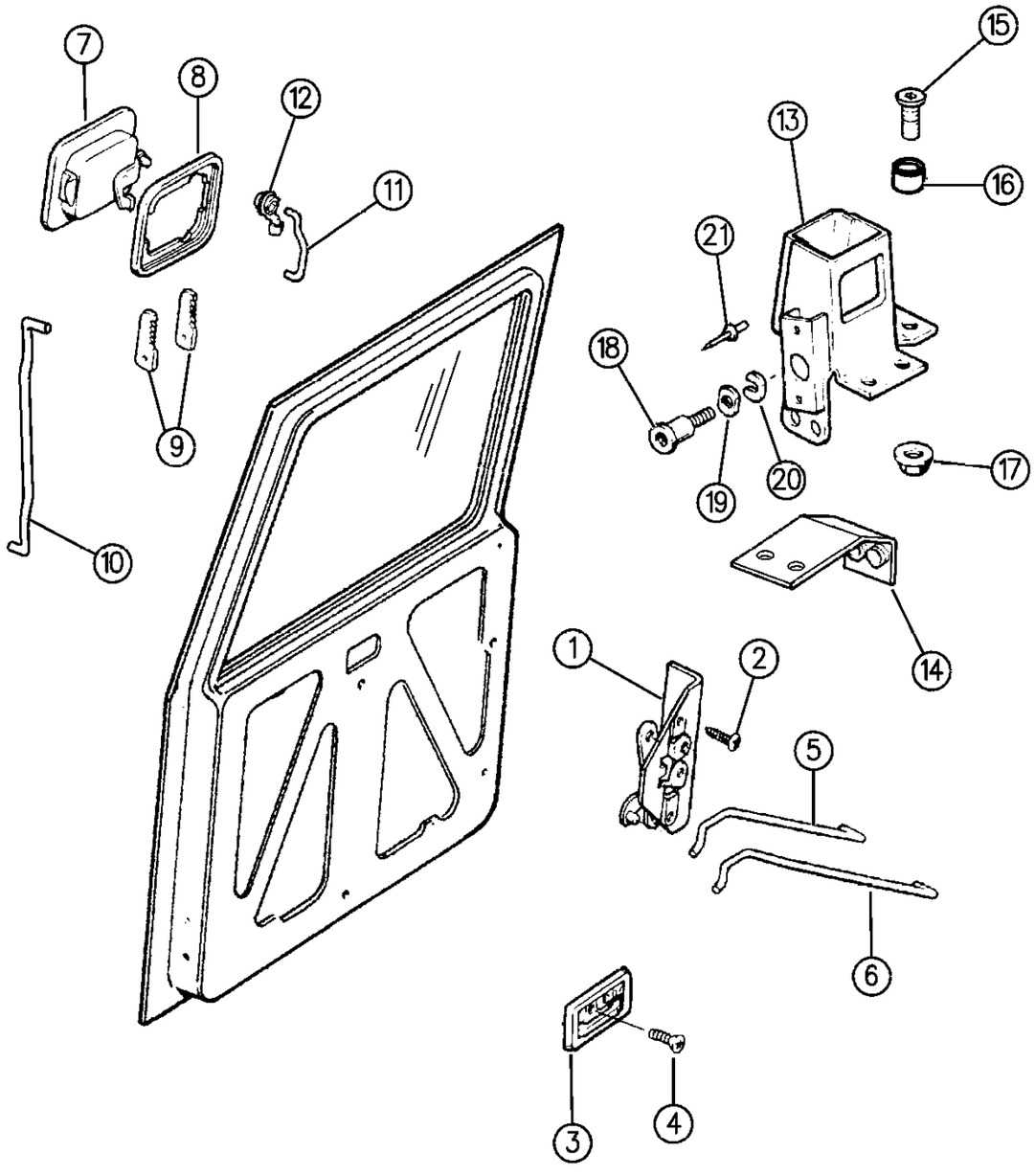

94J68 230

ITEM	PART NUMBER	QTY	BODY	MODEL	DESCRIPTION
1	5507 4948	1			LATCH, Door
2	J018 0020	4			SCREW, Latch
3	5502 9578	1			HANDLE, Remote Control
4	J400 6870	1			SCREW, Handle
5	5507 5374	1			ROD, Lock Lever to Latch
6	5507 5376	1			ROD, Release Lever to Latch
7	5502 8447	1			HANDLE, O/S Door
8	J575 8174	1			GASKET, O/S Handle
9	J575 8175	2			KEEPER, O/S Handle ***
10	5507 5372	1			ROD, O/S Handle To Latch
11					ROD, Lock Cylinder to Latch
	5507 5378	1			1994
	5507 6080	1			1995
12	J400 4532	2			CLIP, Lock Cylinder to Latch Rod
13	J805 2568	1			REINFORCEMENT ASSEMBLY ***
14	J805 2408	1			REINFORCEMENT
15	J400 6307	8			BOLT, Reinforcement
16	J400 6826	1			WASHER, Reinforcement
17	J400 6001	1			NUT, Reinforcement
18					STRIKER, Door
	5534 4721	1			Up To 3-24-94
	5507 6217	1			After 3-24-94
19	5507 4800	1			PLATE, Striker
20	J575 8193	1			SHIM, Striker ***
21	J400 6990	2			RIVET, Striker

MODEL CODES:

72=2 DR Wagon
74=4 DR Wagon
77=Open Body 93" Whlbase
78=Open Body 103" Whlbase - Export
T=2WD
J,N=4WD
U=4WD (RHD)

BODY STYLES:

YJ=Wrangler (4X4) "S"
Weangler (4X4) SE
Wrangler (4X4) Sahara
Wrangler (4X4) Renegade
XJ=Cherokee SE
Cherokee Sport
Cherokee Country
ZJ=Grand Cherokee SE
Grand Cherokee Laredo
Grand Cherolee Limited
ZG=Grand Cherokee European
Y1=Wrangler
X1=Cherokee
Z1=Grand Cherokee
KDX=Vehicles

AR = Use as Required - = Non Illustrated Part P.A.R. = Paint as Required

« RETURN TO GROUP INDEX

MIRRORS, EXTERIOR WRANGLER YJ
Figure DYJ-510

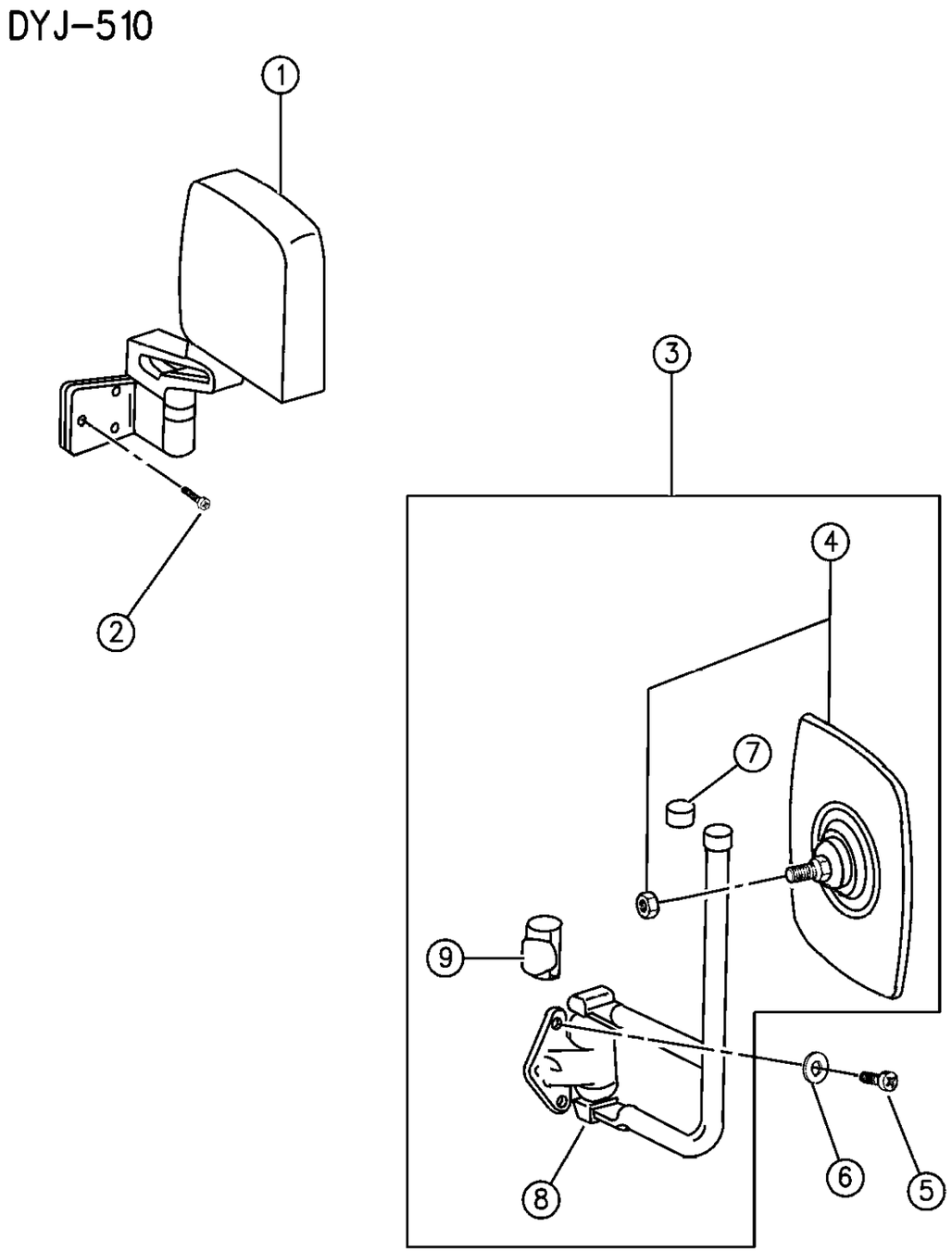

ITEM	PART NUMBER	QTY	BODY	MODEL	DESCRIPTION
1					MIRROR ASSEMBLY ***
	5515 4882-3	1			Except Europe
	5507 5594-5				Europe, Up to 12-23-93
	5515 4880-1	1			Europe, After 12-23-93
2	6034 566	6			SCREW, Mirror
3	5501 2570-1	1			MIRROR ASSEMBLY, KDX ***
					Consists of:
4	5501 2573	2			1-Mirror Head
5	6034 981	6			1-Screw
6		6			1-Washer, (Not Serviced)
7	8350 4073	2			1-Cap
8	5501 2574-5	1			1-Arm, w/Bracket
9	5501 2576	2			1-Cap, Protection

MODEL CODES:

72=2 DR Wagon
74=4 DR Wagon
77=Open Body 93" Whlbase
78=Open Body 103" Whlbase - Export
T=2WD
J,N=4WD
U=4WD (RHD)

BODY STYLES:

YJ=Wrangler (4X4) "S"
Weangler (4X4) SE
Wrangler (4X4) Sahara
Wrangler (4X4) Renegade

XJ=Cherokee SE
Cherokee Sport
Cherokee Country

ZJ=Grand Cherokee SE
Grand Cherokee Laredo
Grand Cherolee Limited
ZG=Grand Cherokee European

Y1=Wrangler
X1=Cherokee
Z1=Grand Cherokee
KDX=Vehicles

AR = Use as Required - = Non Illustrated Part P.A.R. = Paint as Required

DOOR, FRONT AND REAR WEATHERSTRIPS AND SEALS WRANGLER YJ
Figure DYJ-610

DYJ-610

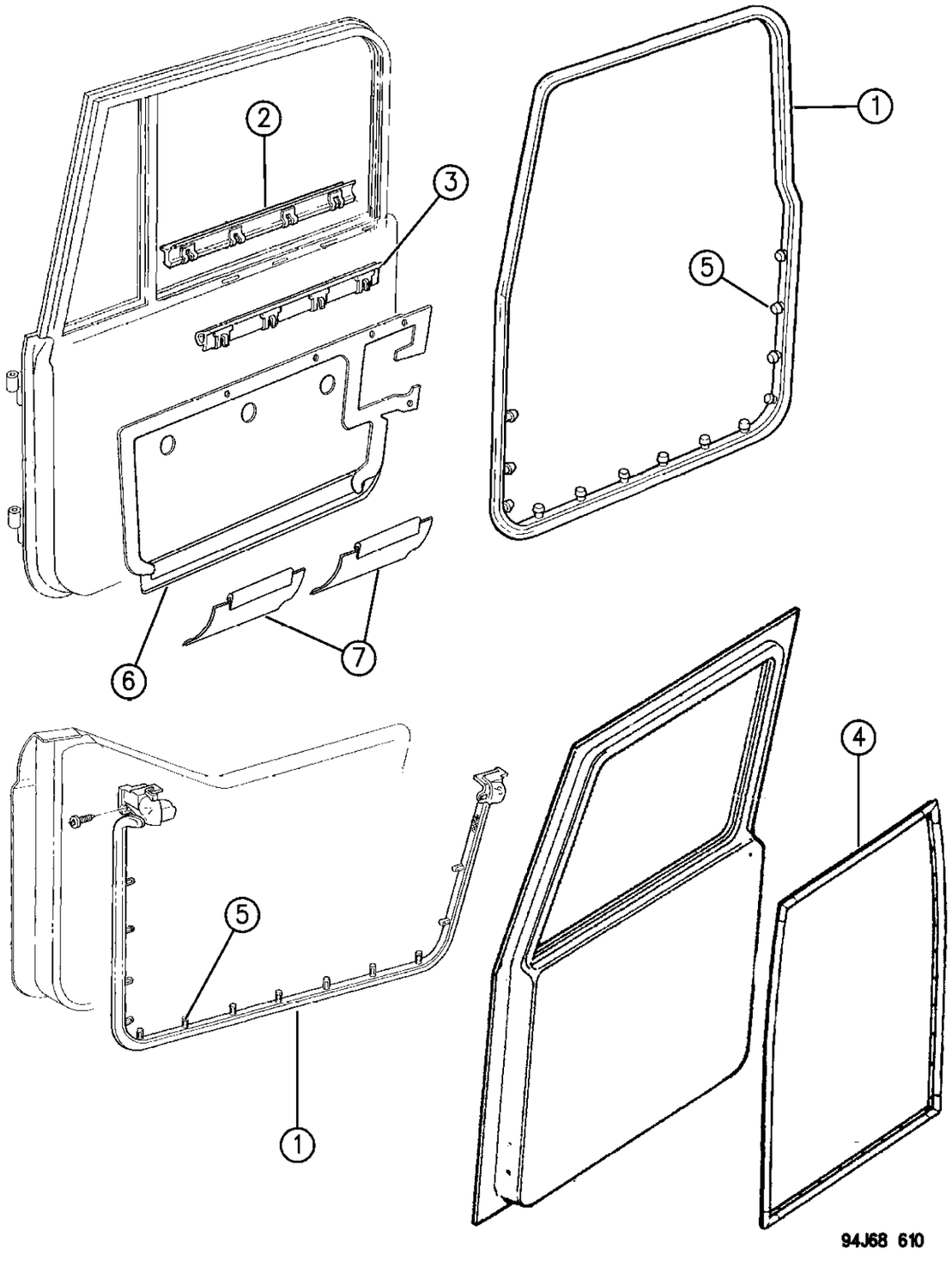

ITEM	PART NUMBER	QTY	BODY	MODEL	DESCRIPTION
1					WEATHERSTRIP, Front Door
					w/o World Cab
	5517 5724-5	1			Full
	5500 9828-9	1			Half
					w/World Cab
	J805 3259	1			Right
	J805 3258	1			Left
2	5502 4254-5	1			WEATHERSTRIP, Belt Outer, Front Door
3	J576 2384-5	1			WEATHERSTRIP, Belt Inner, Front Door
4	J805 2123	1			WEATHERSTRIP, Rear Door, w/World Cab
5	J400 1916	AR			FASTENER, Weatherstrip
6	5521 4766-7	1			WATERSHIELD, Front Door ***
7	J576 6604	4			WATERSHIELD, Secondary, Front Door ***

MODEL CODES:

72=2 DR Wagon
74=4 DR Wagon
77=Open Body 93" Whlbase
78=Open Body 103" Whlbase - Export
T=2WD
J,N=4WD
U=4WD (RHD)

BODY STYLES:

YJ=Wrangler (4X4) "S"
Weangler (4X4) SE
Wrangler (4X4) Sahara
Wrangler (4X4) Renegade

XJ=Cherokee SE
Cherokee Sport
Cherokee Country

ZJ=Grand Cherokee SE
Grand Cherokee Laredo
Grand Cherolee Limited
ZG=Grand Cherokee European

Y1=Wrangler
X1=Cherokee
Z1=Grand Cherokee
KDX=Vehicles

AR = Use as Required - = Non Illustrated Part P.A.R. = Paint as Required

« RETURN TO GROUP INDEX

SAGIPARTS

GROUP-DXJ
DOORS AND RELATED PARTS

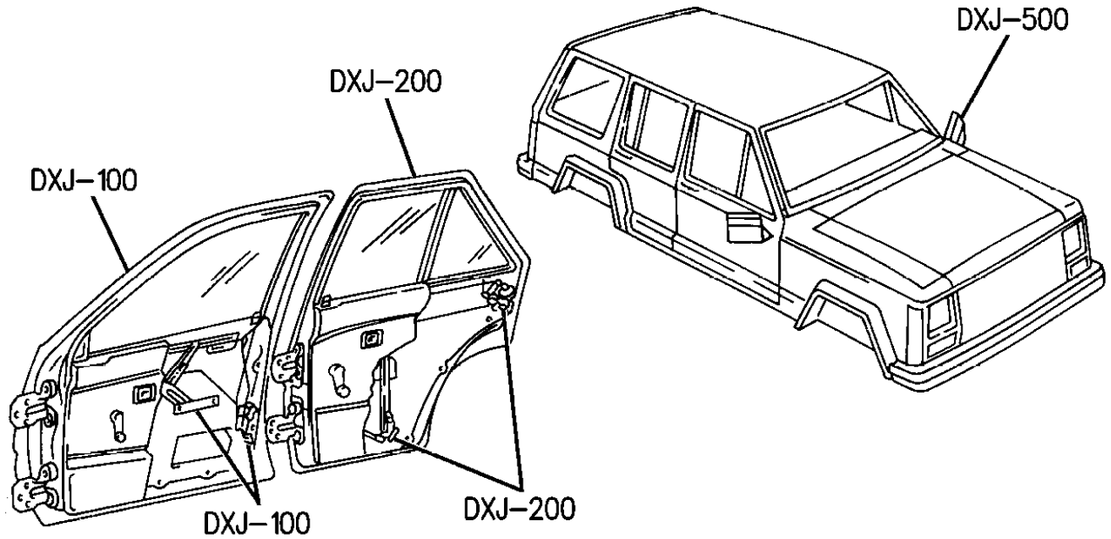

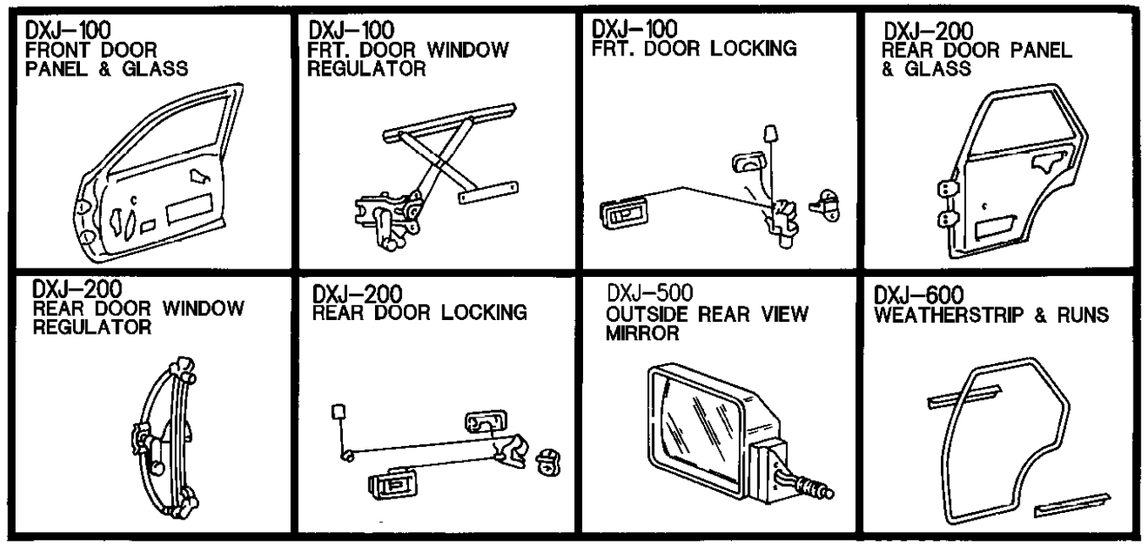

GROUP DXJ - DOORS & RELATED PARTS CHEROKEE

ILLUSTRATION TITLE	GROUP-FIG. NO.
DOOR, FRONT	
DOOR, FRONT SHELL AND HINGES XJ BODY	Fig. DXJ-110
DOOR, FRONT GLASS AND REGULATORS XJ BODY	Fig. DXJ-120
DOOR, FRONT LOCK AND CONTROLS XJ BODY	Fig. DXJ-130
DOOR, REAR	
DOOR, REAR SHELL AND HINGES XJ BODY	Fig. DXJ-210
DOOR, REAR GLASS AND REGULATORS XJ BODY	Fig. DXJ-220
DOOR, REAR LOCK AND CONTROLS CHEROKEE XJ	Fig. DXJ-230
MIRRORS, EXTERIOR	
MIRRORS, EXTERIOR XJ BODY	Fig. DXJ-510
WEATHERSTRIPS	
DOOR, FRONT WEATHERSTRIPS AND SEALS XJ BODY	Fig. DXJ-610
DOOR, REAR WEATHERSTRIPS AND SEALS XJ BODY	Fig. DXJ-620

DOOR, FRONT SHELL AND HINGES XJ BODY
Figure DXJ-110

DXJ-110B

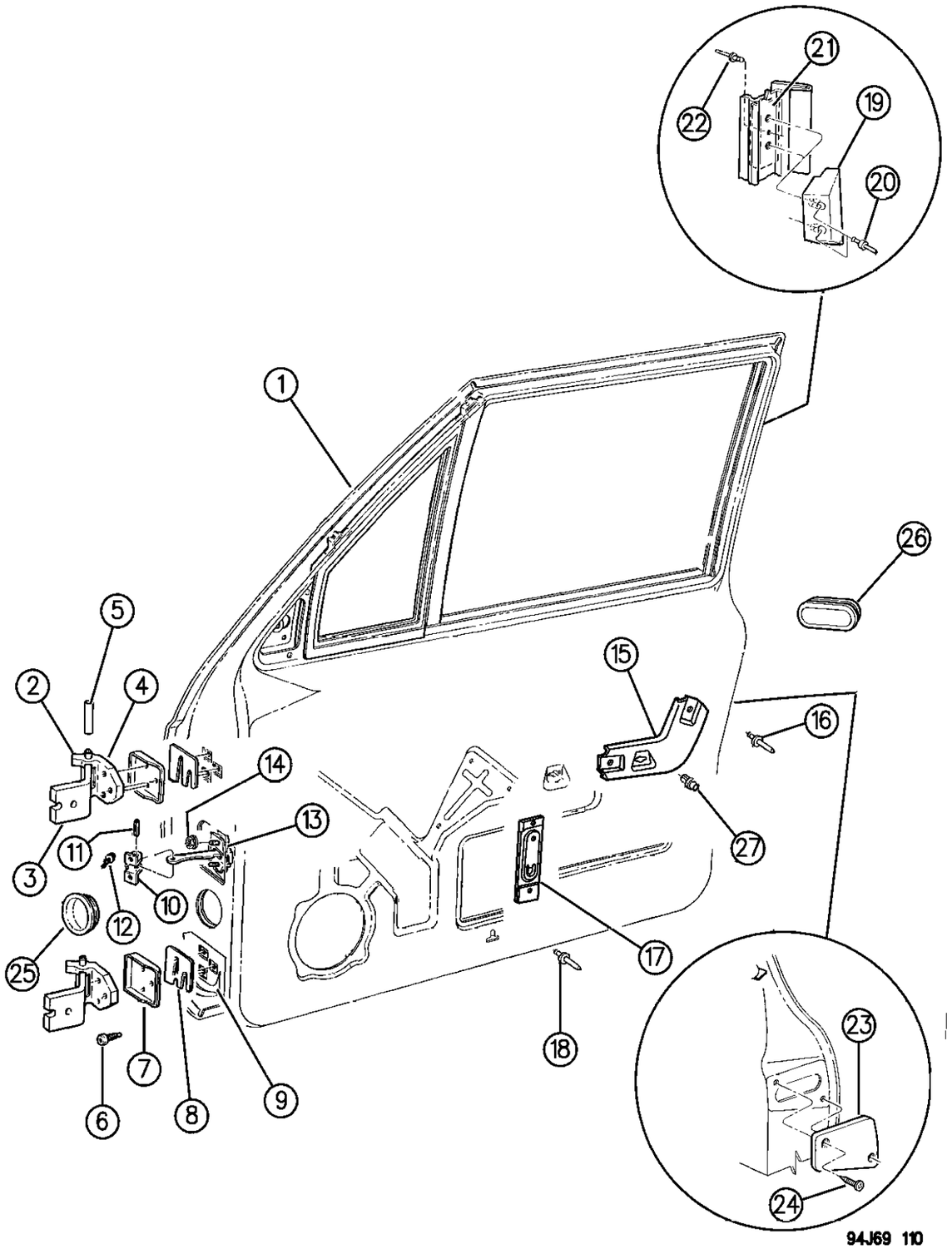

ITEM	PART NUMBER	QTY	BODY	MODEL	DESCRIPTION
1					SHELL, Door ***
					TWO DOOR
	5517 5774-5	1			1994-95
	5523 5240-1	1			1996
					FOUR DOOR
	5517 5776-7	1			1994-95
	5523 5250-1	1			1996
	J363 1398	AR			BUMPER, Door
					PANEL, Repair
					TWO DOOR
	5502 7434-5	1			1994-95
	4798 746-7	1			1996
					FOUR DOOR
	5502 9920-1	1			1994-95
	4798 748-9	1			1996
2	5507 4634	4			HINGE, Complete
3	5507 4638	4			HINGE, Door Half
4	5507 4634	4			HINGE, Body Half
5	4638 276	4			PIN, w/Bushing, Hinge
6	3420 1987	AR			BOLT, Hinge
7	5500 4597	4			PLATE, Hinge Shim
8	5500 4920	AR			SHIM, Hinge
9					PLATE, Hinge Tapping
	5500 4600-1	1			Upper
	5500 0248-9	1			Lower
10	5500 2361	4			BRACKET, Check Arm
11	5501 2900	2			PIN, Check Arm
12		8			SCREW (DNS)
13	5507 5258	2			ARM, Check
14	1150 3750	8			NUT, Check Arm
15	5500 1278-9	1			BRACKET, Armrest
16		4			RIVET (DNS)
17	5500 5444	2			STRAP, Inner Panel Support
18		2			RIVET (DNS)
19	5507 4908-9	1			SPACER, Upper
20	J400 6990	AR			RIVET, Upper Spacer
21	5500 6216	2			REINFORCEMENT, Upper Spacer
22	3420 1684	2			RIVET, Upper Spacer Reinforcement
23	5507 4906-7	1			SPACER, Lower
24	1150 0055	4			SCREW, Lower Spacer
25	5500 2367	2			PLUG, Hole
26	5500 2368	2			PLUG, Access Hole

MODEL CODES:

72=2 DR Wagon
74=4 DR Wagon
77=Open Body 93" Whlbase
78=Open Body 103" Whlbase - Export
T=2WD
J,N=4WD
U=4WD (RHD)

BODY STYLES:

YJ=Wrangler (4X4) "S"
Weangler (4X4) SE
Wrangler (4X4) Sahara
Wrangler (4X4) Renegade
XJ=Cherokee SE
Cherokee Sport
Cherokee Country
ZJ=Grand Cherokee SE
Grand Cherokee Laredo
Grand Cherolee Limited
ZG=Grand Cherokee European
Y1=Wrangler
X1=Cherokee
Z1=Grand Cherokee
KDX=Vehicles

AR = Use as Required - = Non Illustrated Part P.A.R. = Paint as Required

DOOR, FRONT SHELL AND HINGES XJ BODY
Figure DXJ-110

DXJ-110B

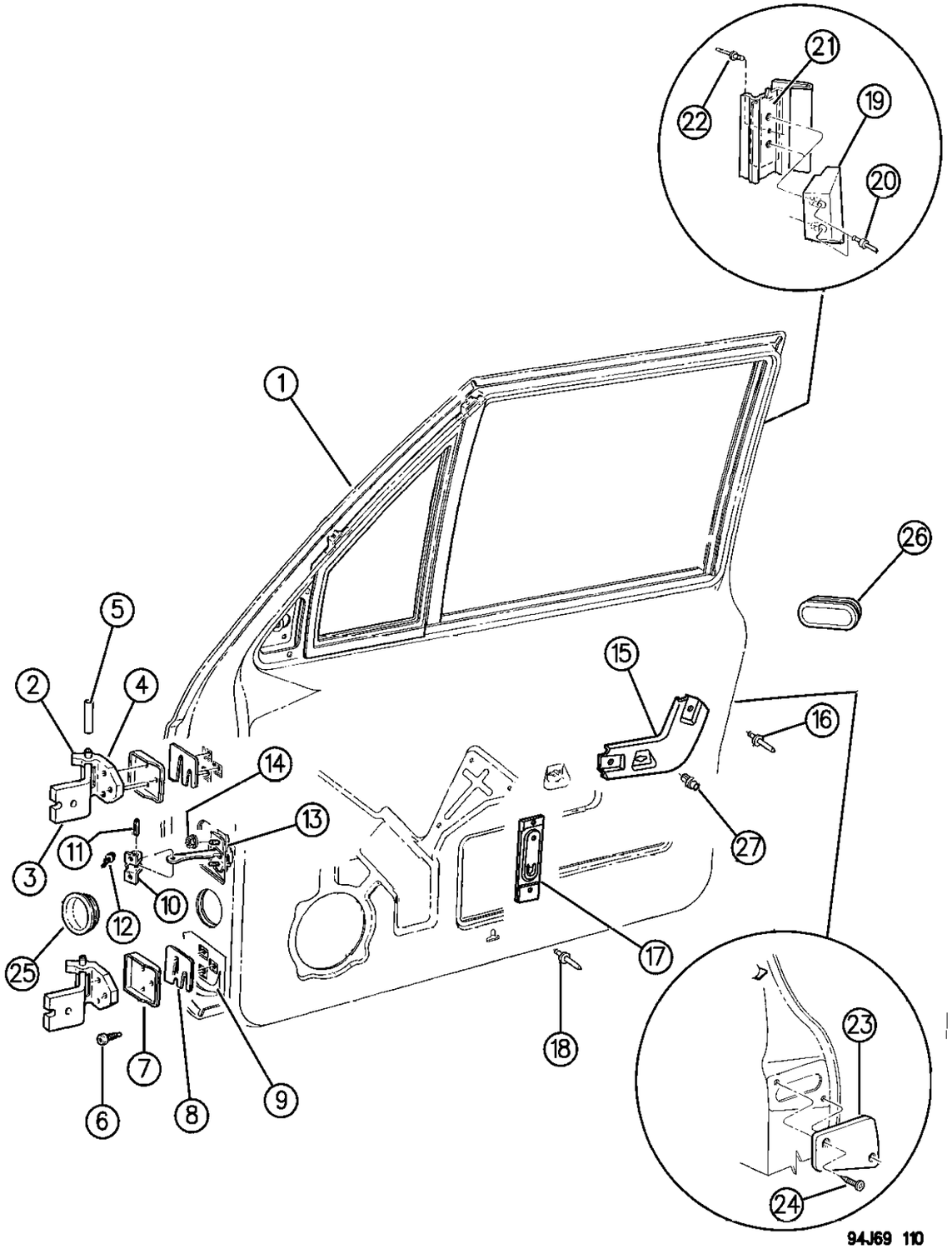

ITEM	PART NUMBER	QTY	BODY	MODEL	DESCRIPTION
27	6502 112	2			CLIP, Mounting

MODEL CODES:

72=2 DR Wagon	77=Open Body 93" Whlbase	T=2WD	U=4WD (RHD)
74=4 DR Wagon	78=Open Body 103" Whlbase - Export	J,N=4WD	

BODY STYLES:

YJ=Wrangler (4X4) "S"	XJ=Cherokee SE	ZJ=Grand Cherokee SE	Y1=Wrangler
Weangler (4X4) SE	Cherokee Sport	Grand Cherokee Laredo	X1=Cherokee
Wrangler (4X4) Sahara	Cherokee Country	Grand Cherolee Limited	Z1=Grand Cherokee
Wrangler (4X4) Renegade		ZG=Grand Cherokee European	KDX=Vehicles

AR = Use as Required - = Non Illustrated Part P.A.R. = Paint as Required

DOOR, FRONT GLASS AND REGULATORS XJ BODY
Figure DXJ-120

DXJ-120

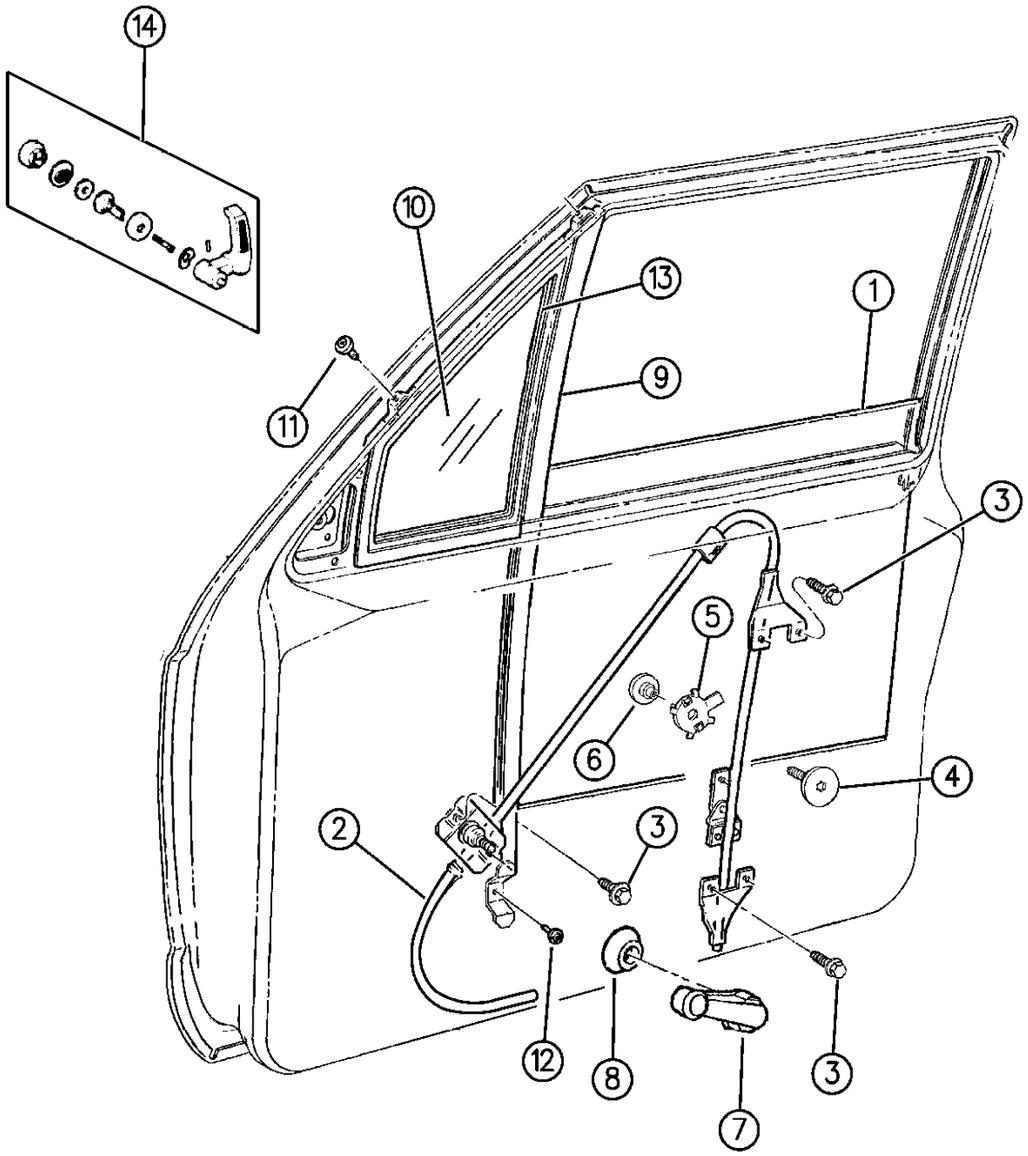

94J69 120

ITEM	PART NUMBER	QTY	BODY	MODEL	DESCRIPTION
1					GLASS, Front Door, Tinted
	5500 0580-1	1			Two Door
	5500 0576-7	1			Four Door
2					REGULATOR, Window
	5515 4716-7	1			Manual
	5515 4794-5	1			Electric, w/Motor
					Electric, w/Motor
	5523 5646	1			Right, 1996
	5523 5647	1			Left, 1996
3					SCREW, Regulator
	3420 1450	AR			Up To 2-14-94
	6501 230	AR			After 2-14-94
4	5515 4752	2			SCREW, w/Bushing, Glass to Regulator
5	3502 6818	2			RETAINER, Glass to Regulator
6	4415 943	2			RETAINER, Glass to Regulator
7	5AB8 4LX9	2			HANDLE, Regulator
8	5AB8 6MX9	2			SPACER, Handle
9					WINDOW, Tinted Vent ***
	4728 926-7	1			Fixed, Up to 5-17-95
	4863 934-5	1			Fixed, After 5-17-95
	4728 924-5	1			Pivoting
10					GLASS, Vent Window
	5502 7410-1	1			Fixed
	5513 4730-1	1			Pivoting
11		4			SCREW (DNS)
12					SCREW, Vent Window, Lower
	3420 1450	2			Up To 2-14-94
	6501 230	2			After 2-14-94
13					WEATHERSTRIP, Vent Glass
		2			Fixed, (Serviced in Assy)
	5502 4300-1	1			Pivoting
14					PACKAGE, Vent Window Handle
	8350 4102	1			Right
	8350 4101	1			Left

MODEL CODES:

72=2 DR Wagon
74=4 DR Wagon
77=Open Body 93" Whlbase
78=Open Body 103" Whlbase - Export
T=2WD
J,N=4WD
U=4WD (RHD)

BODY STYLES:

YJ=Wrangler (4X4) "S"
Weangler (4X4) SE
Wrangler (4X4) Sahara
Wrangler (4X4) Renegade

XJ=Cherokee SE
Cherokee Sport
Cherokee Country

ZJ=Grand Cherokee SE
Grand Cherokee Laredo
Grand Cherolee Limited
ZG=Grand Cherokee European

Y1=Wrangler
X1=Cherokee
Z1=Grand Cherokee
KDX=Vehicles

AR = Use as Required - = Non Illustrated Part P.A.R. = Paint as Required

DOOR, FRONT LOCK AND CONTROLS XJ BODY
Figure DXJ-130

DXJ-130A

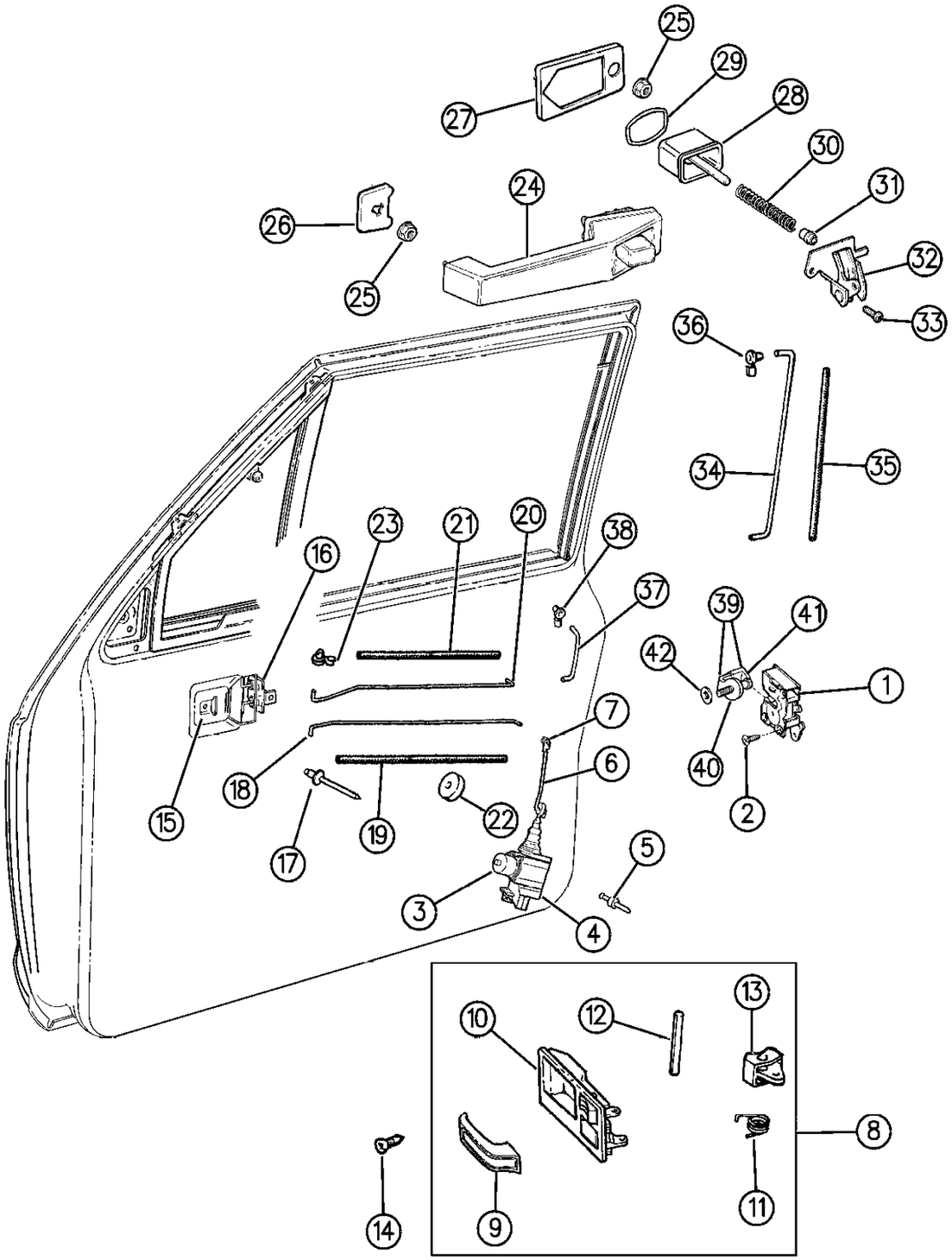

ITEM	PART NUMBER	QTY	BODY	MODEL	DESCRIPTION
1	5500 0766-7	1			LATCH, Door
2	6501 220	6			SCREW, Latch
3	J813 4627	2			SOLENOID, Lock
4	J371 9474	2			BRACKET, Solenoid
5		AR			RIVET (DNS)
6					ROD, Solenoid to Latch
	5500 0836-7	1			Two Door
	5500 0780-1	2			Four Door
7	J400 3672-3	2			CLIP, Solenoid
8	5500 0870-1	1			HANDLE ASSEMBLY, Remote Control
9	5500 2182-3	1			HANDLE, Remote Control
10	5500 2154-5	1			CUP, Remote Control
11	5500 2184	2			SPRING, Remote Control
12	5500 2873	2			PIN, Remote Control
13	5500 2186-7	1			BUTTON, Remote Control
14	S150 0405	2			SCREW, Remote Control
15	1150 0654	2			U-NUT, Remote Control
16	5500 2083	2			RETAINER, Release and Lock Rod
17	3420 1197	2			RIVET, Retainer
18					ROD, Release Lever to Latch
	5507 5288-9	2			Two Door
	5507 5286-7	2			Four Door
19		2			SLEEVE, Release Lever to Latch Rod (DNS)
20					ROD, Lock Lever to Latch
	5507 5292-3	2			Two Door
	5507 5290-1	2			Four Door
21					SLEEVE, Lock Lever to Latch Rod
	3502 3988	2			Two Door
	5502 4862	2			Four Door
22	5507 4657	2			SILENCER, Rod
23					CLIP, Release and Lock Rod
	5257 478	AR			White
	5257 479	AR			Black
24					HANDLE, Exterior
	5502 4926-7	1			Black
	5507 5656-7	1			Bright
25	J420 0306	4			NUT, Handle
26	5500 2180	2			GASKET, Front
27	5507 5024	2			GASKET, Rear
28					BUTTON, Push, w/Rod
	4638 701	2			Black
	5500 2173	2			Bright

MODEL CODES:

72=2 DR Wagon
74=4 DR Wagon
77=Open Body 93" Whlbase
78=Open Body 103" Whlbase - Export
T=2WD
J,N=4WD
U=4WD (RHD)

BODY STYLES:

YJ=Wrangler (4X4) "S"
Weangler (4X4) SE
Wrangler (4X4) Sahara
Wrangler (4X4) Renegade
XJ=Cherokee SE
Cherokee Sport
Cherokee Country
ZJ=Grand Cherokee SE
Grand Cherokee Laredo
Grand Cherolee Limited
ZG=Grand Cherokee European
Y1=Wrangler
X1=Cherokee
Z1=Grand Cherokee
KDX=Vehicles

AR = Use as Required - = Non Illustrated Part P.A.R. = Paint as Required

DOOR, FRONT LOCK AND CONTROLS XJ BODY
Figure DXJ-130

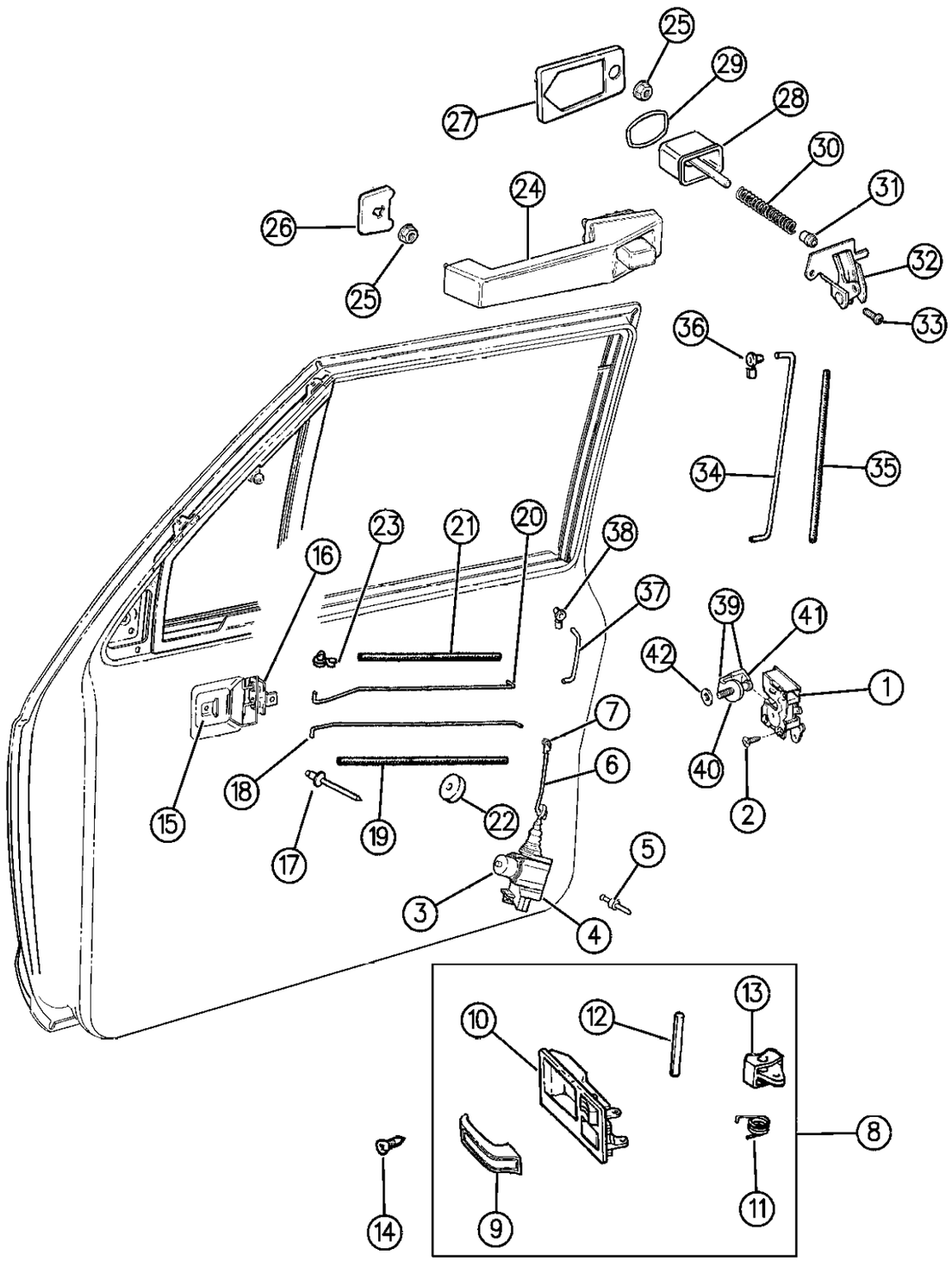

ITEM	PART NUMBER	QTY	BODY	MODEL	DESCRIPTION
29	5500 2176	2			GASKET, Push Button
30	5500 2177	2			SPRING, Push Button
31	5500 2178	2			BUSHING, Push Button
32	5500 2188-9	1			BELLCRANK, Exterior Handle
33	6503 345	2			SCREW, Bellcrank
34					ROD, Exterior Handle to Latch
	5500 0563	2			Two Door, 1994
	5507 6122	2			Two Door, 1995-96
	5500 1954-5	1			Four Door
35		2			SLEEVE, Exterior Handle to Latch Rod (DNS)
36	J400 3672-3	1			CLIP, Exterior Handle to Latch Rod
37					ROD, Lock Cylinder to Latch
	5507 4920-1	1			Two Door, 1994
	5507 4922-3	1			Four Door, 1994
	5507 6278-9	1			Two Door, 1995-96
	5507 6280-1	1			Four Door, 1995-96
38	4336 136	2			CLIP, Lock Cylinder to Latch Rod
39	5503 4166	2			STRIKER, Latch, w/Bracket
40	5502 8499	2			STRIKER, Latch
41	5502 7898	2			SHIELD, Striker
42	6034 196	AR			WASHER, Striker Shim

MODEL CODES:

72=2 DR Wagon
74=4 DR Wagon
77=Open Body 93" Whlbase
78=Open Body 103" Whlbase - Export
T=2WD
J,N=4WD
U=4WD (RHD)

BODY STYLES:

YJ=Wrangler (4X4) "S"
Weangler (4X4) SE
Wrangler (4X4) Sahara
Wrangler (4X4) Renegade
XJ=Cherokee SE
Cherokee Sport
Cherokee Country
ZJ=Grand Cherokee SE
Grand Cherokee Laredo
Grand Cherolee Limited
ZG=Grand Cherokee European
Y1=Wrangler
X1=Cherokee
Z1=Grand Cherokee
KDX=Vehicles

AR = Use as Required - = Non Illustrated Part P.A.R. = Paint as Required

DOOR, REAR SHELL AND HINGES XJ BODY
Figure DXJ-210

DXJ-210D

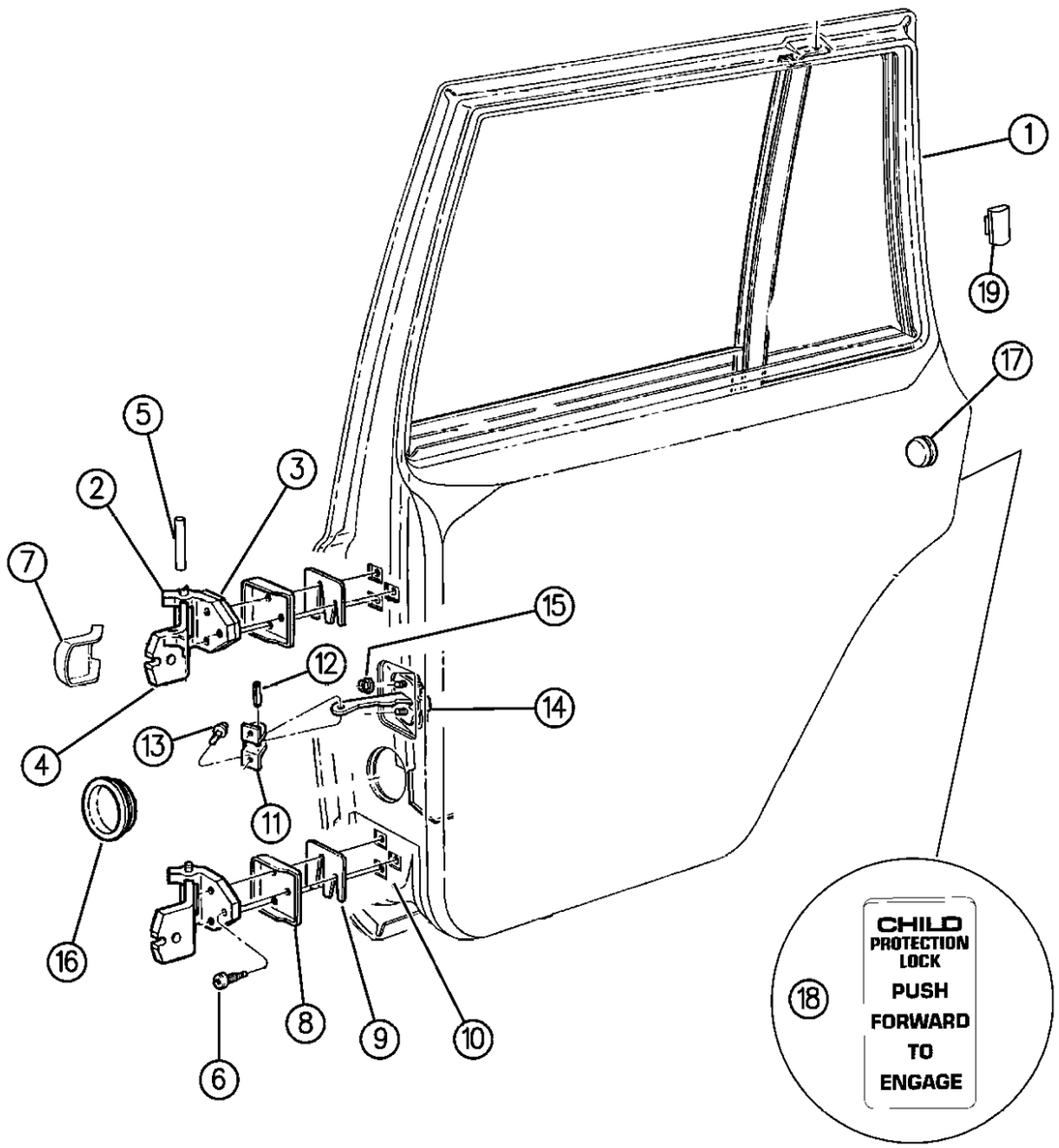

ITEM	PART NUMBER	QTY	BODY	MODEL	DESCRIPTION
1	5534 6112-3	1			SHELL, Door ***
	5700 2666-7	1			PANEL, Repair
2	5507 4635	4			HINGE ASSEMBLY
3	5507 4638	4			HINGE, Door Half
4	5507 4637	4			HINGE, Body Half
5	4638 276	4			PIN, w/Bushing, Hinge
6	3420 1987	AR			BOLT, Hinge
7	5507 4942	4			COVER, Hinge
8	5500 4597	4			PLATE, Hinge Shim
9	5500 4920	AR			SHIM, Hinge
10					PLATE, Hinge Tapping
	5500 4600-1	1			Upper
	5500 0248-9	1			Lower
11	5500 2361	2			BRACKET, Check Arm
12	5501 2900	2			PIN, Check Arm
13		4			SCREW (DNS)
14	5507 5259	2			ARM, Check
15	1150 3750	4			NUT, Check Arm
16	5500 2367	2			PLUG, Hole
17	3420 2049	2			PLUG, Access Hole
18	4445 060	2			LABEL, Child Protection Door Lock
	4615 730	1			French
19	J363 1398	2			BUMPER

MODEL CODES:

72=2 DR Wagon
74=4 DR Wagon
77=Open Body 93" Whlbase
78=Open Body 103" Whlbase - Export
T=2WD
J,N=4WD
U=4WD (RHD)

BODY STYLES:

YJ=Wrangler (4X4) "S"
Weangler (4X4) SE
Wrangler (4X4) Sahara
Wrangler (4X4) Renegade
XJ=Cherokee SE
Cherokee Sport
Cherokee Country
ZJ=Grand Cherokee SE
Grand Cherokee Laredo
Grand Cherolee Limited
ZG=Grand Cherokee European
Y1=Wrangler
X1=Cherokee
Z1=Grand Cherokee
KDX=Vehicles

AR = Use as Required - = Non Illustrated Part P.A.R. = Paint as Required

« RETURN TO GROUP INDEX

DOOR, REAR GLASS AND REGULATORS XJ BODY
Figure DXJ-220

DXJ-220E

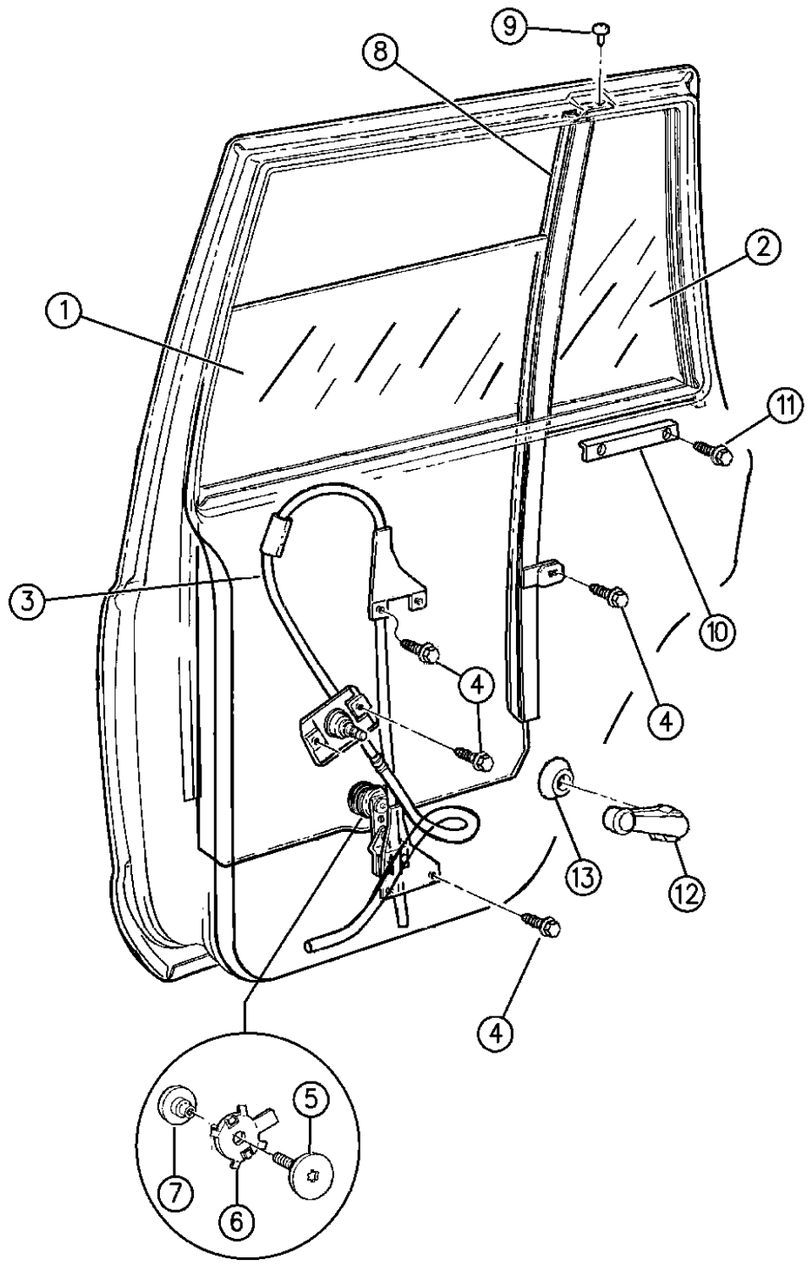

94J69 220

ITEM	PART NUMBER	QTY	BODY	MODEL	DESCRIPTION
1					GLASS, Door
	5500 0590-1	1			Tinted
	5501 8650-1	1			Privacy, Up To 5-27-94
	5517 5066-7	1			Privacy, After 5-27-94
2					GLASS, Door, Stationary
	5500 0620-1	1			Tinted
	5501 8652-3	1			Privacy, Up To 5-27-94
	5517 5068-9	1			Privacy, After 5-27-94
3					REGULATOR, Window
	5507 5928-9	1			Manual
	5515 4898-9	1			Electric, w/Motor
4	6501 230	AR			SCREW, Regulator
5	5515 4752	2			BOLT, w/Bushing, Glass to Regulator
6	3502 6818	2			RETAINER, Glass to Regulator
7	4415 943	2			RETAINER, Glass to Regulator
8	4728 932-3	1			BAR, Division
9		2			SCREW (DNS)
10	5513 4925	2			RETAINER, Glass
11	3420 1450	4			SCREW, Retainer
12	5AB8 4LX9	2			HANDLE, Regulator
13	5AB8 6MX9	2			ESCUCHEON, Regulator Handle ***

MODEL CODES:

72=2 DR Wagon
74=4 DR Wagon
77=Open Body 93" Whlbase
78=Open Body 103" Whlbase - Export
T=2WD
J,N=4WD
U=4WD (RHD)

BODY STYLES:

YJ=Wrangler (4X4) "S"
Weangler (4X4) SE
Wrangler (4X4) Sahara
Wrangler (4X4) Renegade

XJ=Cherokee SE
Cherokee Sport
Cherokee Country

ZJ=Grand Cherokee SE
Grand Cherokee Laredo
Grand Cherolee Limited
ZG=Grand Cherokee European

Y1=Wrangler
X1=Cherokee
Z1=Grand Cherokee
KDX=Vehicles

AR = Use as Required - = Non Illustrated Part P.A.R. = Paint as Required

DOOR, REAR LOCK AND CONTROLS CHEROKEE XJ
Figure DXJ-230

DXJ-230B

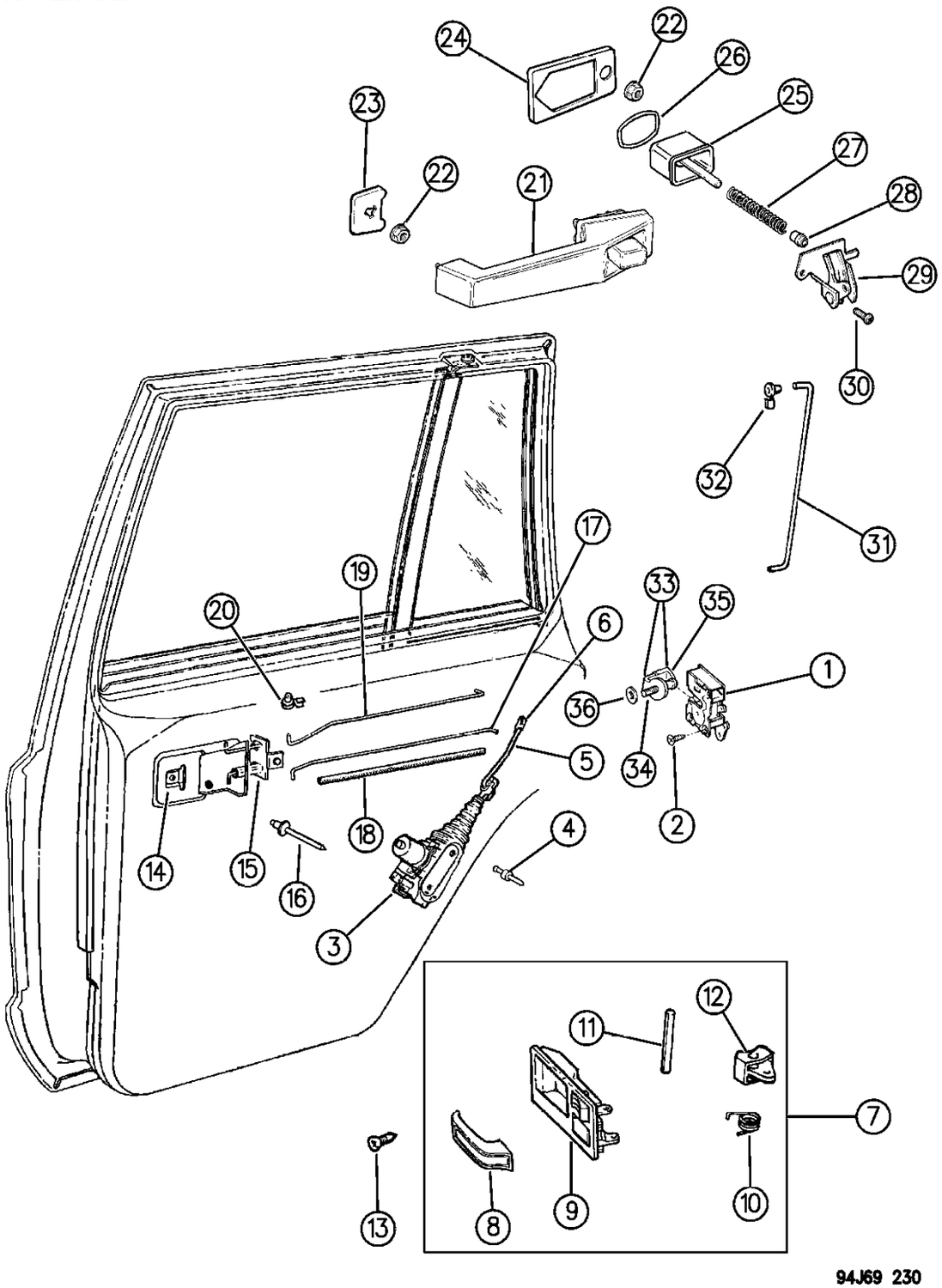

ITEM	PART NUMBER	QTY	BODY	MODEL	DESCRIPTION
1					LATCH, Door
	5502 6382-3	1			1994
	5507 5878-9	1			1995-96
2	6501 220	AR			SCREW, Latch
3	J813 4627	AR			SOLENOID, Lock
4		4			RIVET (DNS)
5	5500 0780-1	2			ROD, Solenoid to Latch
6	J400 3672-3	1			CLIP, Solenoid to Latch Rod
7	5500 0870-1	1			HANDLE ASSEMBLY, Remote Control
8	5500 2182-3	1			HANDLE, Remote Control
9	5500 2154-5	1			CUP, Remote Control
10	5500 2184	2			SPRING, Remote Control
11	5500 2873	2			PIN, Remote Control
12	5500 2186-7	1			BUTTON, Remote Control
13	S150 0405	2			SCREW, Remote Control
14	1150 0654	2			U-NUT, Remote Control
15	5500 2083	2			RETAINER, Release and Lock Rod
16	3420 1197	2			RIVET, Retainer
17	5500 1966-7	1			ROD, Release Lever to Latch
18		2			SLEEVE, Release Lever to Latch Rod, (Not Serviced)
19	5500 1970-1	1			ROD, Lock Lever to Latch
20					CLIP, Release and Lock Rod
	5257 478	AR			White
	5257 479	AR			Black
21					HANDLE, Exterior
	5502 4926-7	1			Black
	5507 5656-7	1			Bright
22	J420 0306	4			NUT, Handle
23	5500 2180	2			GASKET, Front
24	5507 5024	2			GASKET, Rear
25					BUTTON, Push, w/Rod
	4638 701	2			Black
	5500 2173	2			Bright
26	5500 2176	2			GASKET, Push Button
27	5500 2177	2			SPRING, Push Button
28	5500 2178	2			BUSHING, Push Button
29	5500 2188-9	1			BELLCRANK, Handle
30	6503 345	2			SCREW, Bellcrank
31	5500 1968	2			ROD, Exterior Handle to Latch
32	J400 3672-3	1			CLIP, Exterior Handle to Latch Rod
33	5503 4166	2			STRIKER, Latch, w/Bracket
34	5502 8499	2			STRIKER, Latch

MODEL CODES:

72=2 DR Wagon
74=4 DR Wagon
77=Open Body 93" Whlbase
78=Open Body 103" Whlbase - Export
T=2WD
J,N=4WD
U=4WD (RHD)

BODY STYLES:

YJ=Wrangler (4X4) "S"
Weangler (4X4) SE
Wrangler (4X4) Sahara
Wrangler (4X4) Renegade
XJ=Cherokee SE
Cherokee Sport
Cherokee Country
ZJ=Grand Cherokee SE
Grand Cherokee Laredo
Grand Cherolee Limited
ZG=Grand Cherokee European
Y1=Wrangler
X1=Cherokee
Z1=Grand Cherokee
KDX=Vehicles

AR = Use as Required - = Non Illustrated Part P.A.R. = Paint as Required

DOOR, REAR LOCK AND CONTROLS CHEROKEE XJ
Figure DXJ-230

DXJ-230B

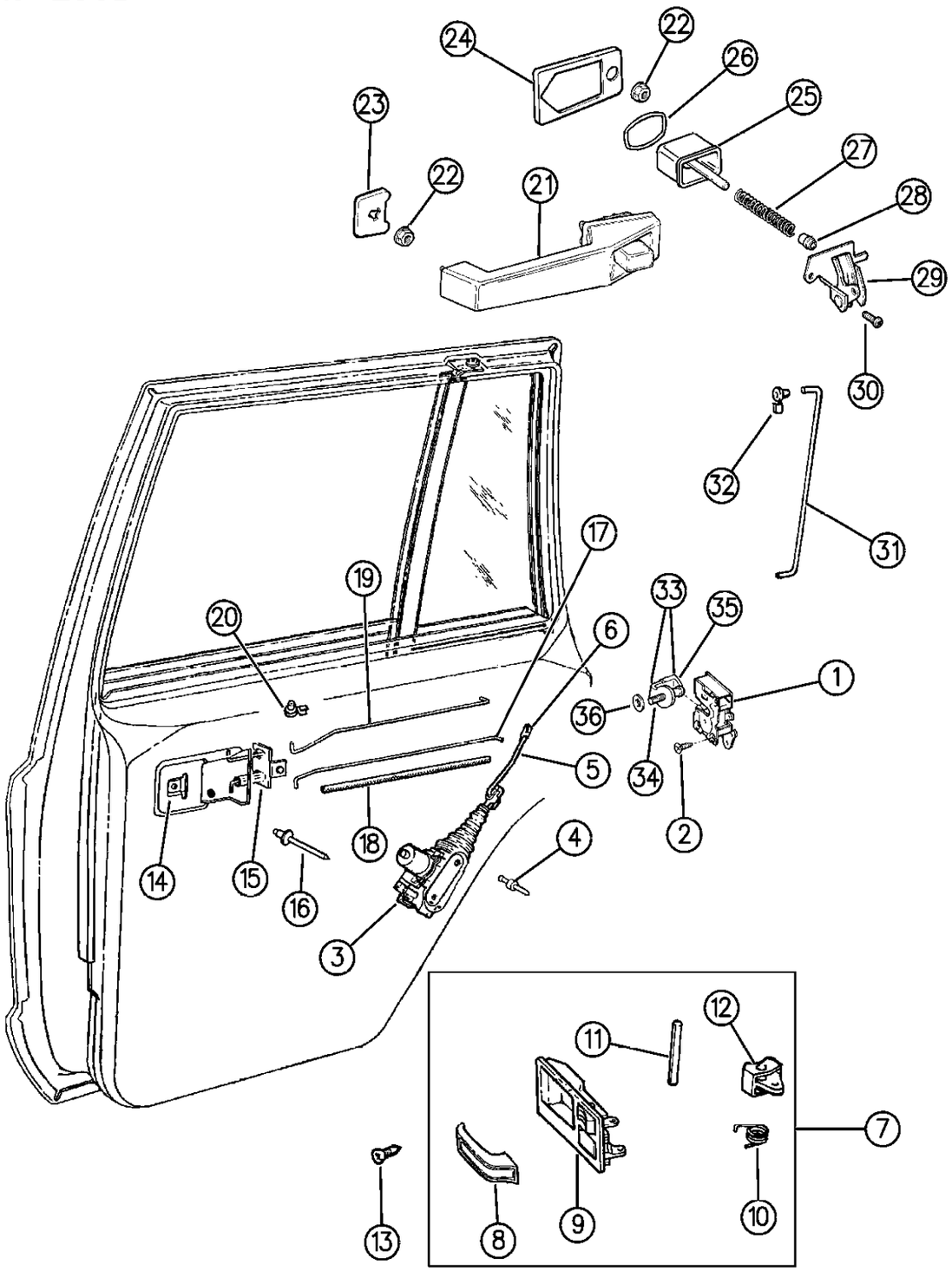

ITEM	PART NUMBER	QTY	BODY	MODEL	DESCRIPTION
35	5502 7898	2			SHIELD, Striker
36	6034 196	AR			WASHER, Striker

MODEL CODES:

72=2 DR Wagon
74=4 DR Wagon
77=Open Body 93" Whlbase
78=Open Body 103" Whlbase - Export
T=2WD
J,N=4WD
U=4WD (RHD)

BODY STYLES:

YJ=Wrangler (4X4) "S"
Weangler (4X4) SE
Wrangler (4X4) Sahara
Wrangler (4X4) Renegade
XJ=Cherokee SE
Cherokee Sport
Cherokee Country
ZJ=Grand Cherokee SE
Grand Cherokee Laredo
Grand Cherolee Limited
ZG=Grand Cherokee European
Y1=Wrangler
X1=Cherokee
Z1=Grand Cherokee
KDX=Vehicles

AR = Use as Required - = Non Illustrated Part P.A.R. = Paint as Required

MIRRORS, EXTERIOR XJ BODY
Figure DXJ-510

DXJ-510B

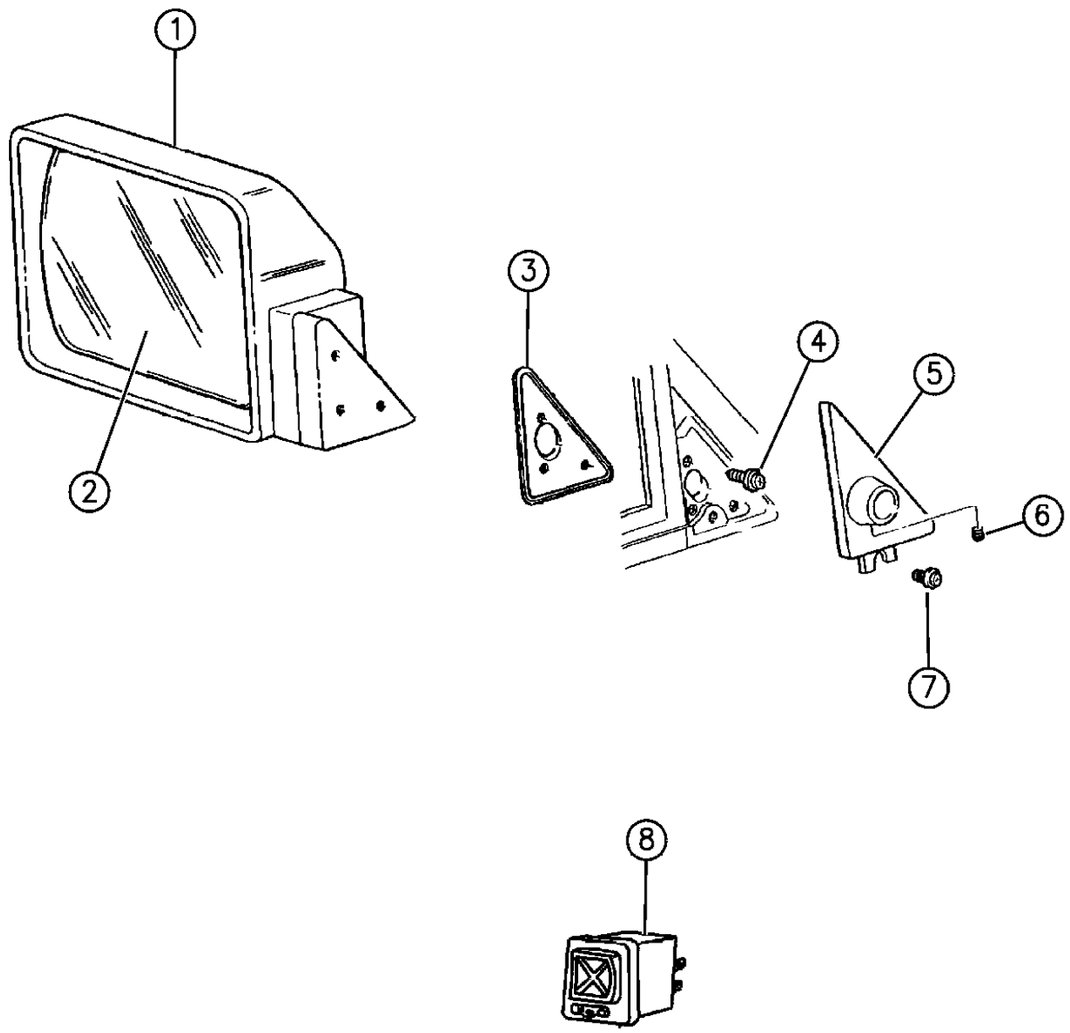

94J69 510

ITEM	PART NUMBER	QTY	BODY	MODEL	DESCRIPTION
1					MIRROR, w/Gasket
					Remote Control
	5507 4574-5	1			Fixed Head, Black
	5503 4122-3	1			Foldaway Head, Black
	5515 4936-7	1			Foldaway Head, Black, (EXPORT)
	5502 7701	1			Left, RHD
	5502 7700	1			Right, RHD
					Electric, Left
	5507 5433	1			Flat Black
	5507 5435	1			Bright
	5515 4941	1			Black, (EXPORT)
	5515 4683	1			Flat, RHD
	5515 4695	1			Convex, RHD
					Electric, Right
	5507 5432	1			Flat Black
	5507 5434	1			Bright
	5515 4940	1			Black, (EXPORT)
	5515 4682	1			Flat, RHD
	5515 4734	1			Convex, RHD
2					GLASS, Mirror
					Remote Control
	4796 830-1	1			Foldaway Head, Black, (EXPORT)
					Electric, Left
	4796 829	1			Flat, RHD
	4796 827	1			Black, (EUROPE)
					Electric, Right
	4796 826	1			Black, (EUROPE)
	4796 880	1			Flat, RHD
	4796 828	1			Convex, RHD
3		2			GASKET, Mirror (DNS)
4	J400 4648	AR			SCREW, Mirror
5					COVER, Mirror, w/Set Screw
	5500 8034-5	1			Remote Control
	5500 8030-1	1			Electric
6		2			SCREW, Set (DNS)
7	3420 1314	2			SCREW, Cover
8	5600 0911	1			SWITCH, Mirror

MODEL CODES:

72=2 DR Wagon
74=4 DR Wagon
77=Open Body 93" Whlbase
78=Open Body 103" Whlbase - Export
T=2WD
J,N=4WD
U=4WD (RHD)

BODY STYLES:

YJ=Wrangler (4X4) "S"
Weangler (4X4) SE
Wrangler (4X4) Sahara
Wrangler (4X4) Renegade
XJ=Cherokee SE
Cherokee Sport
Cherokee Country
ZJ=Grand Cherokee SE
Grand Cherokee Laredo
Grand Cherolee Limited
ZG=Grand Cherokee European
Y1=Wrangler
X1=Cherokee
Z1=Grand Cherokee
KDX=Vehicles

AR = Use as Required - = Non Illustrated Part P.A.R. = Paint as Required

DOOR, FRONT WEATHERSTRIPS AND SEALS XJ BODY
Figure DXJ-610

DXJ-610D

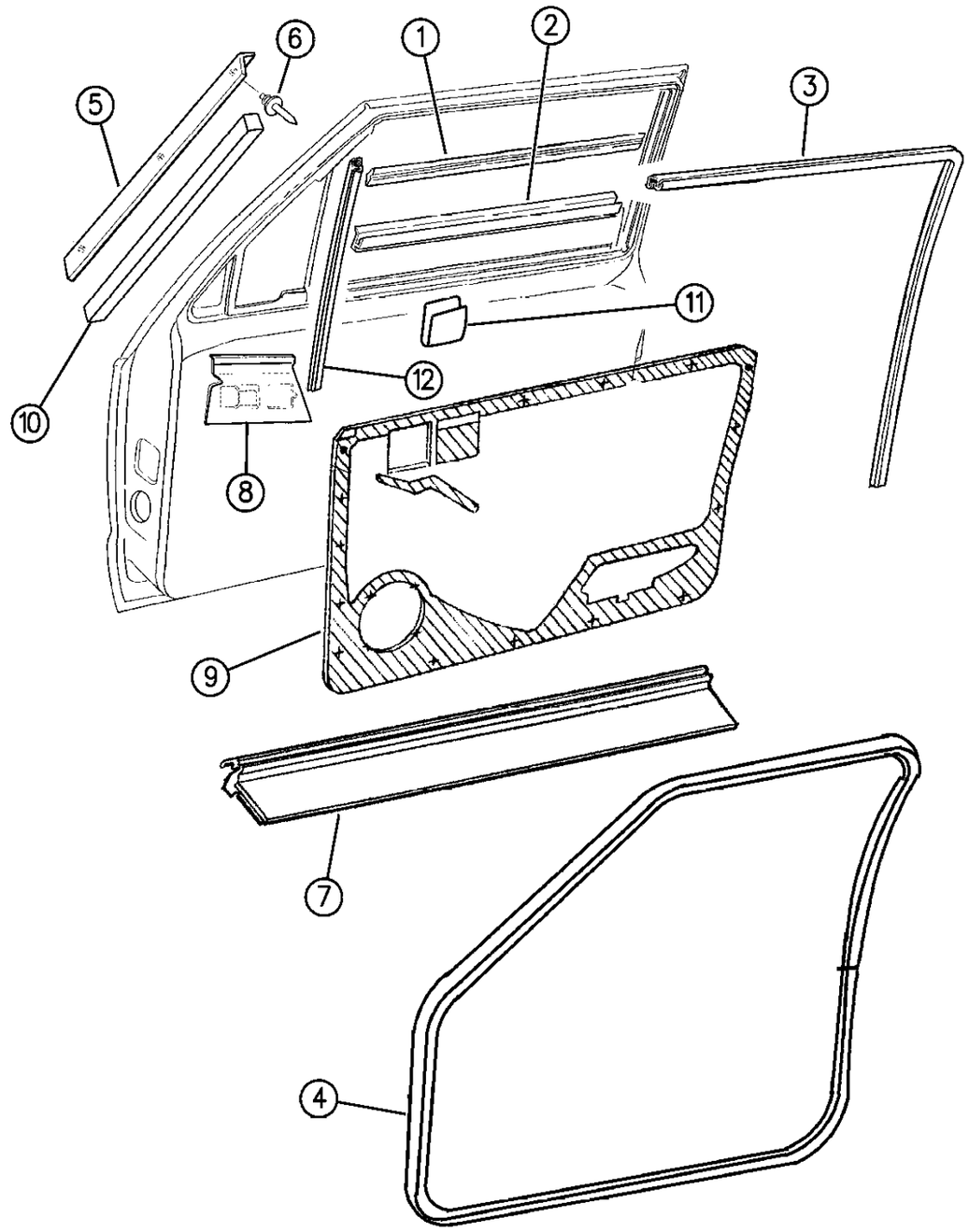

ITEM	PART NUMBER	QTY	BODY	MODEL	DESCRIPTION
1					WEATHERSTRIP, Outer
	5513 5208-9	1			Two Door
	5513 5206-7	1			Four Door
2					WEATHERSTRIP, Inner
	5500 5530-1	1			Two Door
	5500 5528-9	1			Four Door
3					WEATHERSTRIP, Glass Run
	5523 5176-7	1			Two Door
	5523 5172-3	1			Four Door
4	5502 5514	2			WEATHERSTRIP, Door
5	5513 4514	2			SEAL, Secondary
6	3420 2855	AR			RIVET, Secondary Seal
7					SEAL, Door to Rocker
	5513 4854	2			Two Door
	5513 4856	2			Four Door
8	5502 7146-7	1			WATERDAM, Switch ***
9					WATERDAM, Door ***
	5513 5142-3	1			Two Door, Up to 5-20-94
	5517 5622-3	1			Two Door, From 5-20-94 to 9-21-94
	5523 5190-1	1			Two Door, From 9-21-94 to 12-21-94
	5523 5284-5	1			Two Door, After 12-21-94
	5513 5144-5	1			Four Door, Up to 4-22-94
	5517 5624-5	1			Four Door, From 4-22-94 to 9-15-94
	5523 5188-9	1			Four Door, From 9-15-94 to 12-21-94
	5523 5282-3	1			Four Door, After 12-21-94
	5600 9378-9	1			1996
	5517 5355	2			SEAL, Door Secondary (A Pillar)
10	5517 5771	2			SEAL, "A" Pillar Blocker
11	5500 5383	AR			CLIP, Retainer
12	5500 2337	2			WEATHERSTRIP, Division Bar Glass Run

MODEL CODES:

72=2 DR Wagon
74=4 DR Wagon
77=Open Body 93" Whlbase
78=Open Body 103" Whlbase - Export
T=2WD
J,N=4WD
U=4WD (RHD)

BODY STYLES:

YJ=Wrangler (4X4) "S"
Weangler (4X4) SE
Wrangler (4X4) Sahara
Wrangler (4X4) Renegade
XJ=Cherokee SE
Cherokee Sport
Cherokee Country
ZJ=Grand Cherokee SE
Grand Cherokee Laredo
Grand Cherolee Limited
ZG=Grand Cherokee European
Y1=Wrangler
X1=Cherokee
Z1=Grand Cherokee
KDX=Vehicles

AR = Use as Required - = Non Illustrated Part P.A.R. = Paint as Required

« RETURN TO GROUP INDEX

DOOR, REAR WEATHERSTRIPS AND SEALS XJ BODY
Figure DXJ-620

DXJ-620

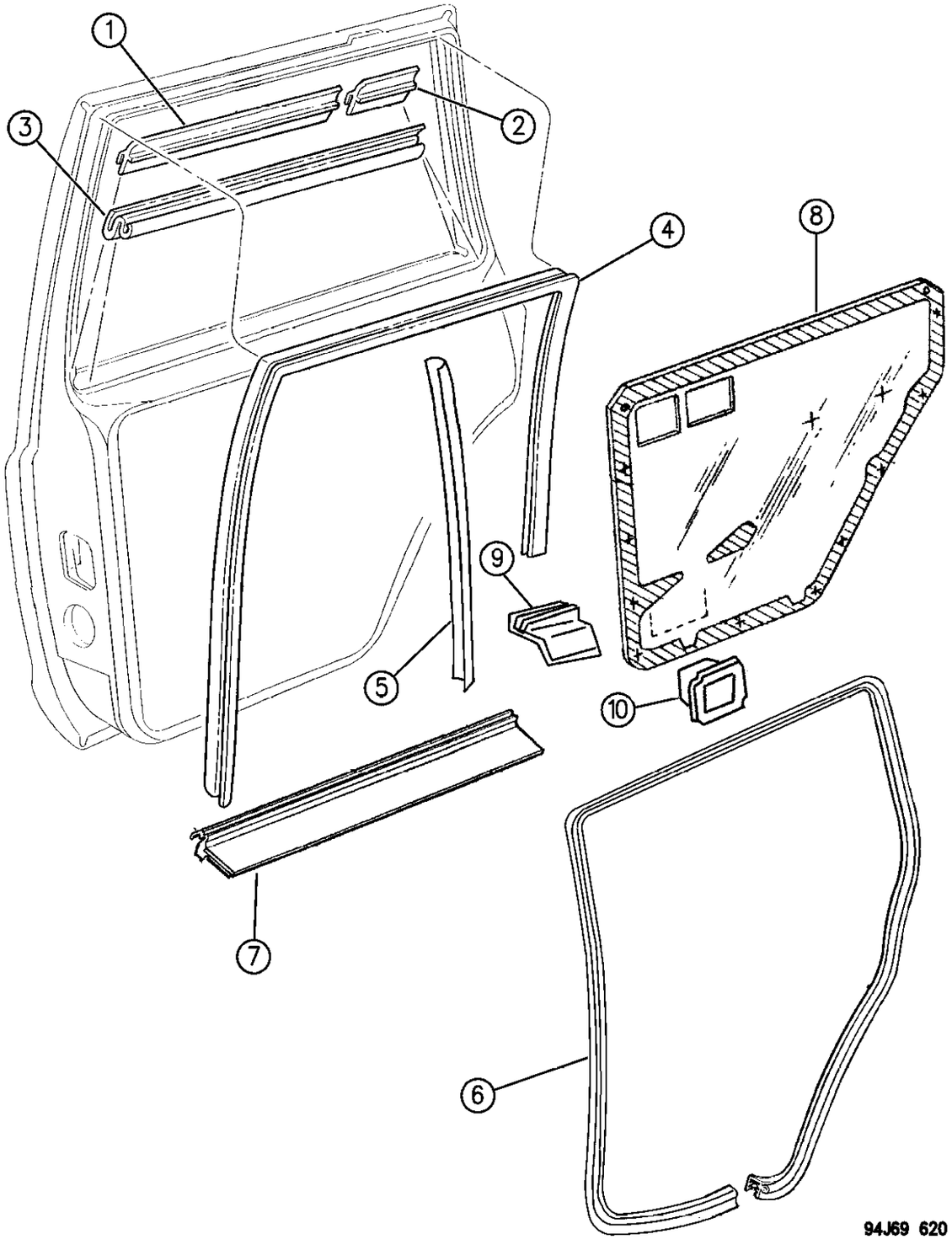

ITEM	PART NUMBER	QTY	BODY	MODEL	DESCRIPTION
1	5500 5304	2			WEATHERSTRIP, Outer Belt, Front
2	5500 5377	2			WEATHERSTRIP, Outer Belt, Rear
	5526 5405	2			1996 ***
3	5513 5128-9	1			WEATHERSTRIP, Inner Belt
4	5500 5316-7	1			WEATHERSTRIP, Glass Run
5	5500 5666	2			WEATHERSTRIP, Division Bar
6	5502 5514	2			WEATHERSTRIP, Door
7	5513 4852	2			SEAL, Rocker
	3420 2855	AR			RIVET, Seal Att.
8					WATERDAM, Door ***
	5513 5146-7	1			Up to 4-27-94
	5517 5626-7	1			From 4-27-94 to 10-13-94
	5523 5286-7	1			After 10-13-94
9	5500 6518	2			DEFLECTOR, Stationary Glass
10	5500 5178	2			WATERDAM, Ash Receiver Pocket ***

MODEL CODES:

72=2 DR Wagon
74=4 DR Wagon
77=Open Body 93" Whlbase
78=Open Body 103" Whlbase - Export
T=2WD
J,N=4WD
U=4WD (RHD)

BODY STYLES:

YJ=Wrangler (4X4) "S"
Weangler (4X4) SE
Wrangler (4X4) Sahara
Wrangler (4X4) Renegade
XJ=Cherokee SE
Cherokee Sport
Cherokee Country
ZJ=Grand Cherokee SE
Grand Cherokee Laredo
Grand Cherolee Limited
ZG=Grand Cherokee European
Y1=Wrangler
X1=Cherokee
Z1=Grand Cherokee
KDX=Vehicles

AR = Use as Required - = Non Illustrated Part P.A.R. = Paint as Required

« RETURN TO GROUP INDEX

SAGIPARTS

GROUP-DZJ

DOORS AND RELATED PARTS

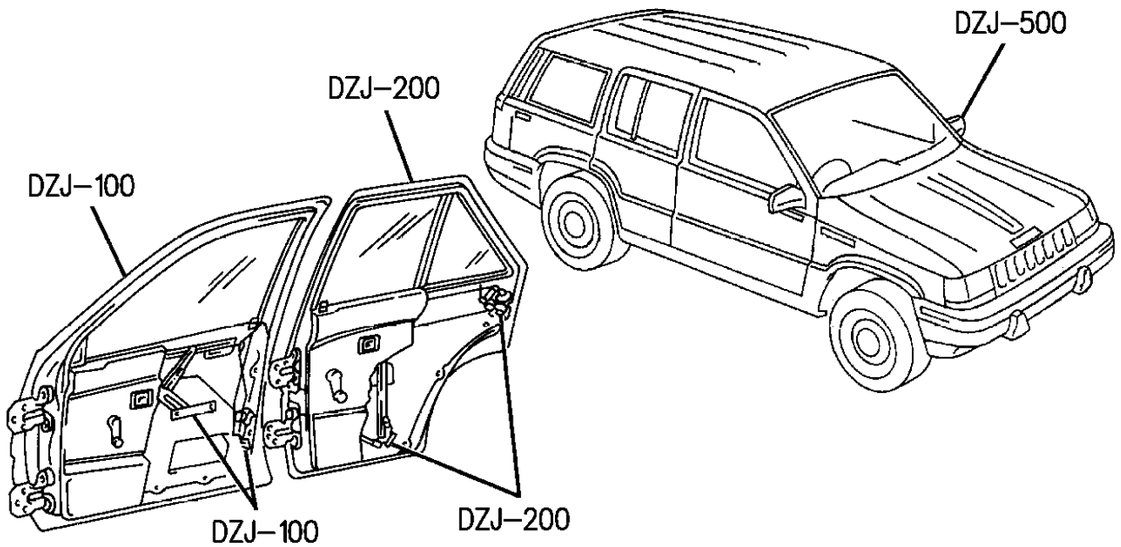

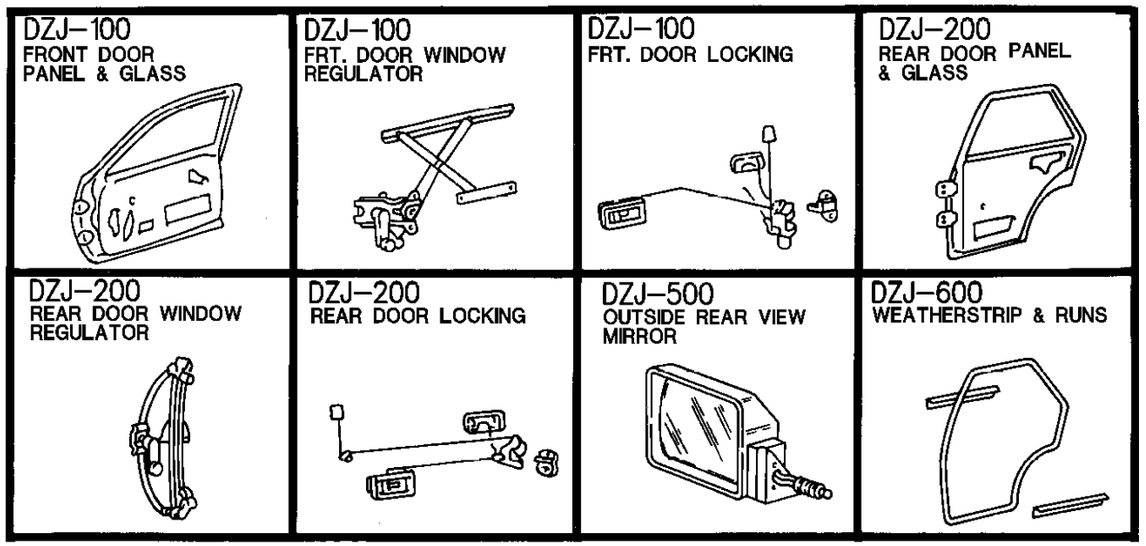

GROUP DZJ - DOORS & RELATED PARTS GRAND CHEROKEE

ILLUSTRATION TITLE	GROUP-FIG. NO.
DOOR, FRONT	
DOOR, FRONT SHELL AND HINGES ZJ, ZG BODY	Fig. DZJ-110
DOOR, FRONT GLASS AND REGULATORS ZJ, ZG BODY	Fig. DZJ-120
DOOR, FRONT LOCK AND CONTROLS ZJ, ZG BODY	Fig. DZJ-130
DOOR, REAR	
DOOR, REAR SHELL AND HINGES ZJ, ZG BODY	Fig. DZJ-210
DOOR, REAR GLASS AND REGULATORS ZJ, ZG BODY	Fig. DZJ-220
DOORS, REAR LOCK AND CONTROLS ZJ, ZG BODY	Fig. DZJ-230
MIRRORS, EXTERIOR	
MIRRORS, EXTERIOR ZJ, ZG BODY	Fig. DZJ-510
WEATHERSTRIPS	
DOOR, FRONT WEATHERSTRIPS AND SEALS ZJ, ZG BODY	Fig. DZJ-610
DOOR, REAR WEATHERSTRIPS AND SEALS ZJ, ZG BODY	Fig. DZJ-620

DOOR, FRONT SHELL AND HINGES ZJ, ZG BODY
Figure DZJ-110

DZJ-110

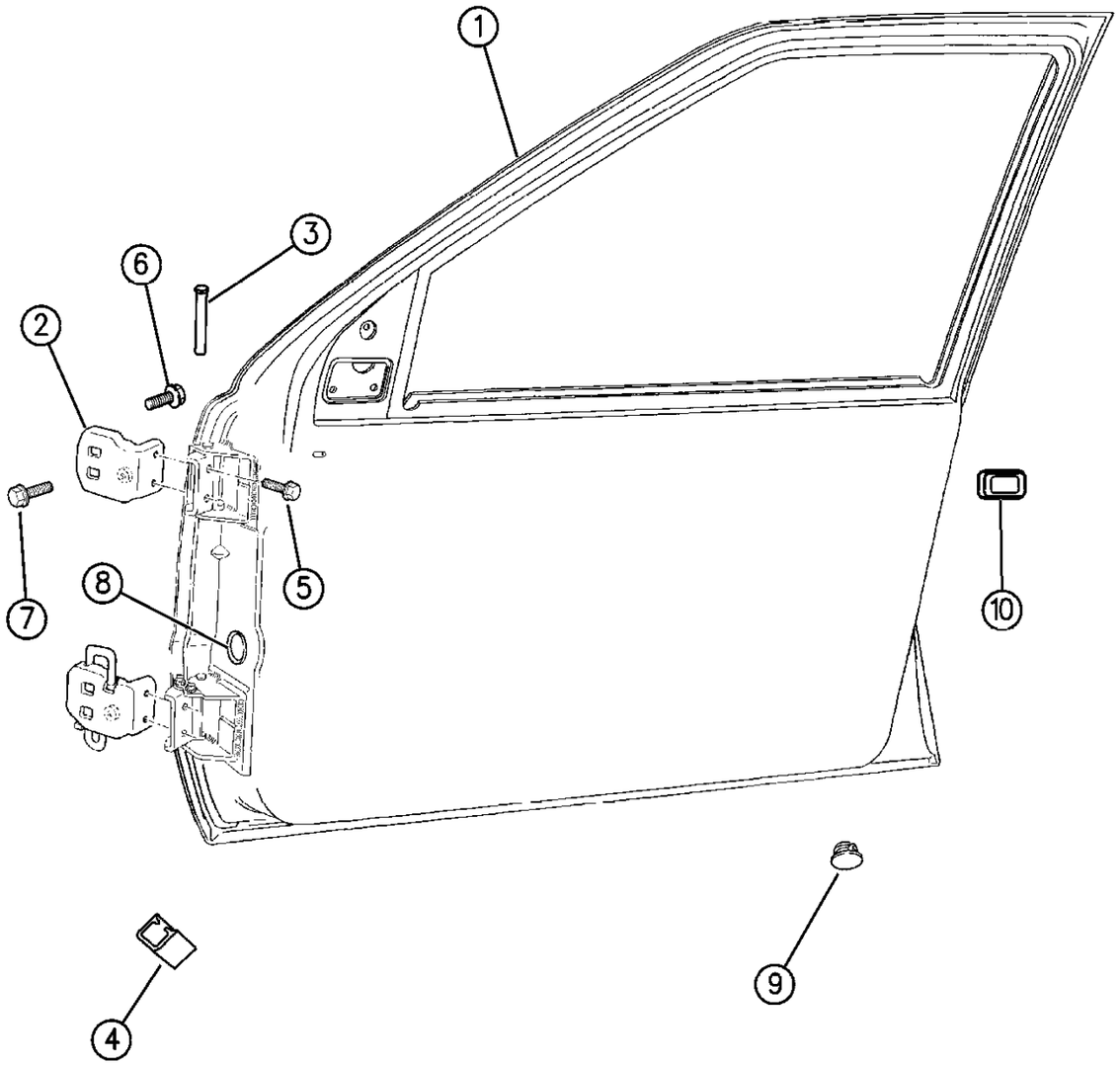

94J70 110

ITEM	PART NUMBER	QTY	BODY	MODEL	DESCRIPTION
1					SHELL, Door ***
	4746 412-3	1			1994-95
	4856 168-9	1			1996
	5503 1632-3	1			PANEL, Repair
					BAR, Reinforcement
	5529 6022	1			Right
	5529 6023	1			Left
					WATERSHIELD, Door ***
	5529 5996	1			Right
	5529 5997	1			Left
2					HINGE, Door
					Body Half
	5503 3502	2			Upper
	5503 3518-9	1			Lower
					Door Half
	5507 6202	2			Upper, w/Bushing and Pin
	5507 6200-1	1			Lower, w/Bushing and Pin
	5507 6192	2			PIN, Hinge
3	5507 4591	4			BUSHING, Hinge Pin
4	5507 5371	4			CLIP, Torque Rod Dampener
5	6502 686	8			SCREW, Hinge to Hinge
6	6502 282	8			SCREW, Hinge to Cowl
7	6503 538	4			SCREW, Cowl to Hinge
8	5500 2367	2			PLUG, Door
9	2860 332	2			PLUG, Door
10	5500 2368	2			PLUG, Latch Access

MODEL CODES:

72=2 DR Wagon
74=4 DR Wagon
77=Open Body 93" Whlbase
78=Open Body 103" Whlbase - Export
T=2WD
J,N=4WD
U=4WD (RHD)

BODY STYLES:

YJ=Wrangler (4X4) "S"
Weangler (4X4) SE
Wrangler (4X4) Sahara
Wrangler (4X4) Renegade
XJ=Cherokee SE
Cherokee Sport
Cherokee Country
ZJ=Grand Cherokee SE
Grand Cherokee Laredo
Grand Cherolee Limited
ZG=Grand Cherokee European
Y1=Wrangler
X1=Cherokee
Z1=Grand Cherokee
KDX=Vehicles

AR = Use as Required - = Non Illustrated Part P.A.R. = Paint as Required

« RETURN TO GROUP INDEX

DOOR, FRONT GLASS AND REGULATORS ZJ, ZG BODY
Figure DZJ-120

DZJ-120

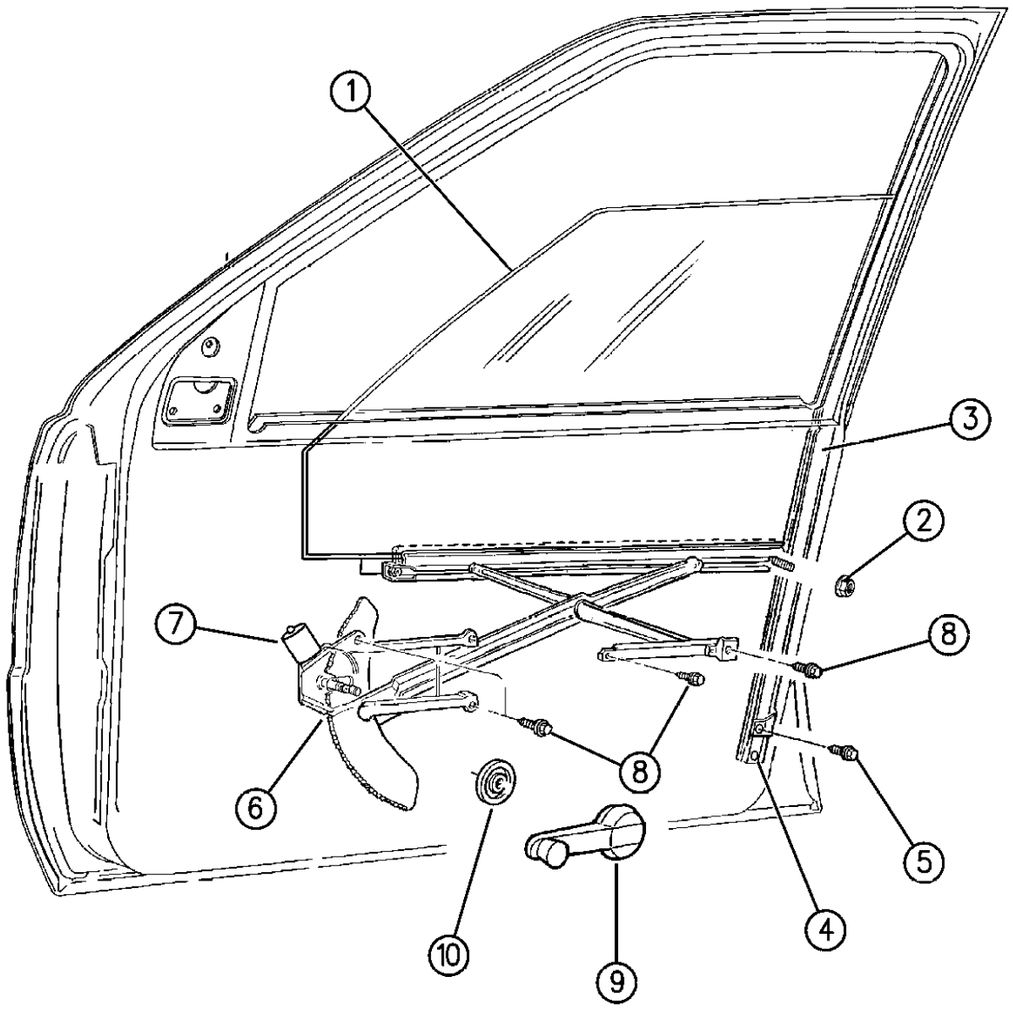

94J70 120

ITEM	PART NUMBER	QTY	BODY	MODEL	DESCRIPTION
1					GLASS, Door
	5513 5052	1			Right
	5513 5053	1			Left
	5513 5054-5	1			EUROPE
	5525 5926	1	ZG		Right, 1995
	5525 5927	1	ZG		Left, 1995
	5529 5972	1	ZG		Right, 1996
	5529 5973	1	ZG		Left, 1996
2	6502 691	4			NUT, Glass
3	5507 6244-5	1			CHANNEL, w/Weatherstrip
4	5507 4802	2			BUMPER, Lower Channel
5		AR			SCREW (DNS)
6					REGULATOR, Window ***
					Manual
	5515 4832-3	1			Up To 3-10-94
	5507 6190-1	1			After 3-10-94
	4773 894-5	1			Electric
7	5600 5164-5	1			MOTOR, Regulator
8		AR			SCREW (DNS)
9					HANDLE, Regulator
	5AB8 4JH9	2			Cordovan
	5AB8 4JS1	2			Charcoal
	5AB8 4LX9	2			Black
	5AB8 4KY6	2			Sand
10	5507 5229	2			SPACER, Handle

MODEL CODES:

72=2 DR Wagon
74=4 DR Wagon
77=Open Body 93" Whlbase
78=Open Body 103" Whlbase - Export
T=2WD
J,N=4WD
U=4WD (RHD)

BODY STYLES:

YJ=Wrangler (4X4) "S"
Weangler (4X4) SE
Wrangler (4X4) Sahara
Wrangler (4X4) Renegade
XJ=Cherokee SE
Cherokee Sport
Cherokee Country
ZJ=Grand Cherokee SE
Grand Cherokee Laredo
Grand Cherolee Limited
ZG=Grand Cherokee European
Y1=Wrangler
X1=Cherokee
Z1=Grand Cherokee
KDX=Vehicles

AR = Use as Required - = Non Illustrated Part P.A.R. = Paint as Required

« RETURN TO GROUP INDEX

DOOR, FRONT LOCK AND CONTROLS ZJ, ZG BODY
Figure DZJ-130

DZJ–130

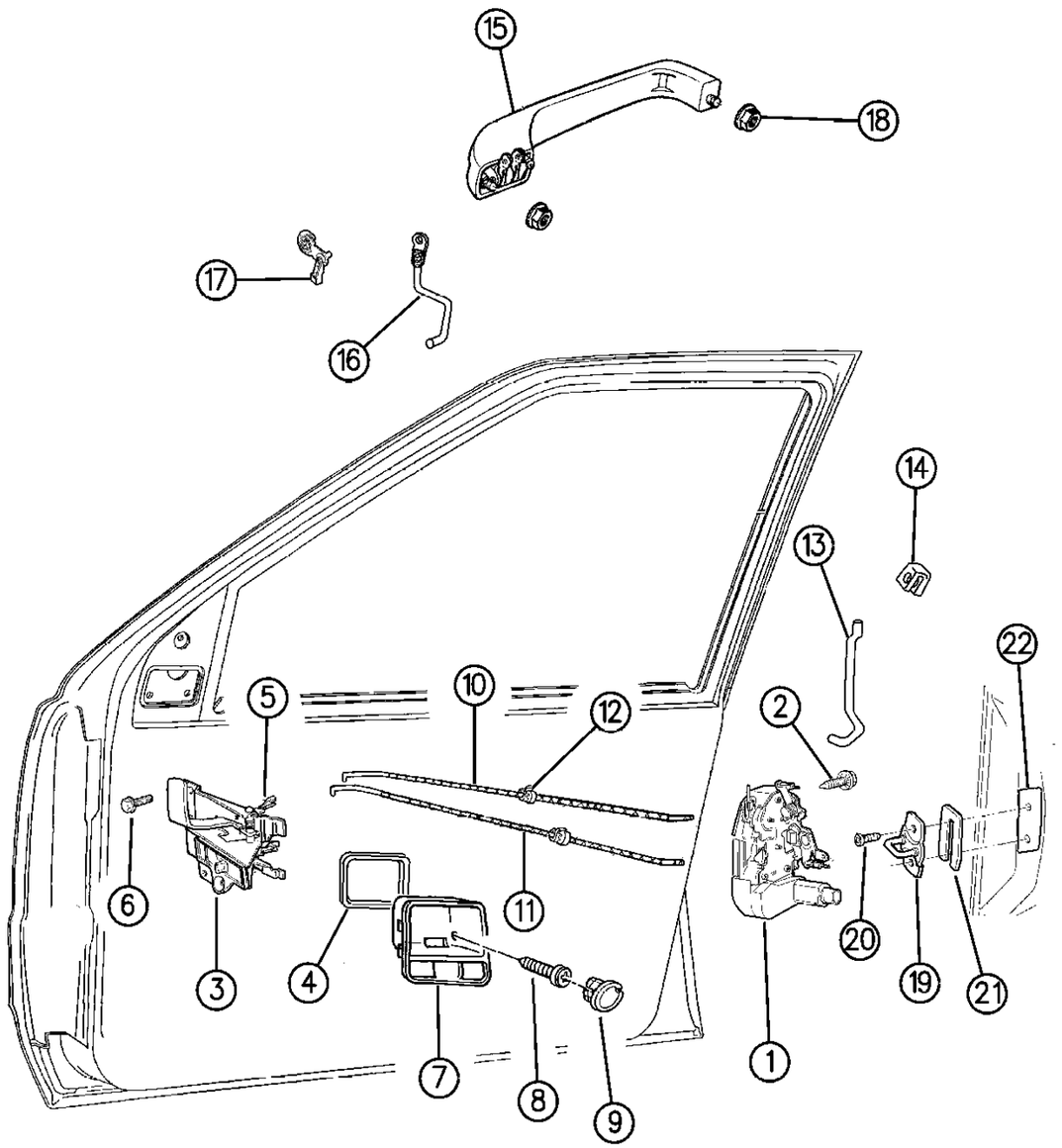

94J70 130

ITEM	PART NUMBER	QTY	BODY	MODEL	DESCRIPTION
1					LATCH, Door
	4773 636-7	1			Manual
	4798 914-5	1			Electric
2	6033 876	AR			SCREW, Latch
3					CONTROL, Remote
	5507 5620-1	1			w/o Limited Pkg.
	5507 5622-3	1			Limited
4	5507 5619	1			GASKET, Remote Control Handle
5	4658 676	2			CLIP, Release and Lock Lever Rod
6		4			SCREW (DNS)
7	5521 5884-5	1			BEZEL, Remote Control 1994-95
8		AR			SCREW, Bezel (DNS)
9					PLUG, Bezel Screw
	5521 4828	2			1994-95
					1996
	5EG4 0SAZ	4			Agate
	5EG4 0SC3	4			Gray
	5EG4 0ST6	4			Spice
10	5507 4828-9	1			ROD, Release Lever to Latch
11	5507 4826-7	1			ROD, Lock Lever to Latch
12	3882 620	4			CLIP, Anti-Rattle
13					ROD, Lock Cylinder to Latch
	5503 0092-3	1			1994
	5507 6014-5	1			1995-96
14	4336 136	2			CLIP, Lock Cylinder to Latch Rod
15					HANDLE, Exterior
	5507 5652-3	1			1994
	5507 6092-3	1			1995-96
16					ROD, O/S Handle to Latch
	5507 5352-3	1			1994
	5507 6094-5	2			1995-96
17	3454 220	2			CLIP, Exterior Handle to Latch Rod
18	6503 226	4			NUT, Exterior Handle
19	4520 288	2			STRIKER, Latch
20	6503 120	4			SCREW, Striker
21					SPACER, Striker
	4520 289	AR			
	5507 5483	AR			(2.0/2.5)
22	5525 6000	2			PLATE, Striker Tapping

MODEL CODES:

72=2 DR Wagon
74=4 DR Wagon
77=Open Body 93" Whlbase
78=Open Body 103" Whlbase - Export
T=2WD
J,N=4WD
U=4WD (RHD)

BODY STYLES:

YJ=Wrangler (4X4) "S"
Weangler (4X4) SE
Wrangler (4X4) Sahara
Wrangler (4X4) Renegade
XJ=Cherokee SE
Cherokee Sport
Cherokee Country
ZJ=Grand Cherokee SE
Grand Cherokee Laredo
Grand Cherolee Limited
ZG=Grand Cherokee European
Y1=Wrangler
X1=Cherokee
Z1=Grand Cherokee
KDX=Vehicles

AR = Use as Required - = Non Illustrated Part P.A.R. = Paint as Required

« RETURN TO GROUP INDEX

DOOR, REAR SHELL AND HINGES ZJ, ZG BODY
Figure DZJ-210

DZJ-210A

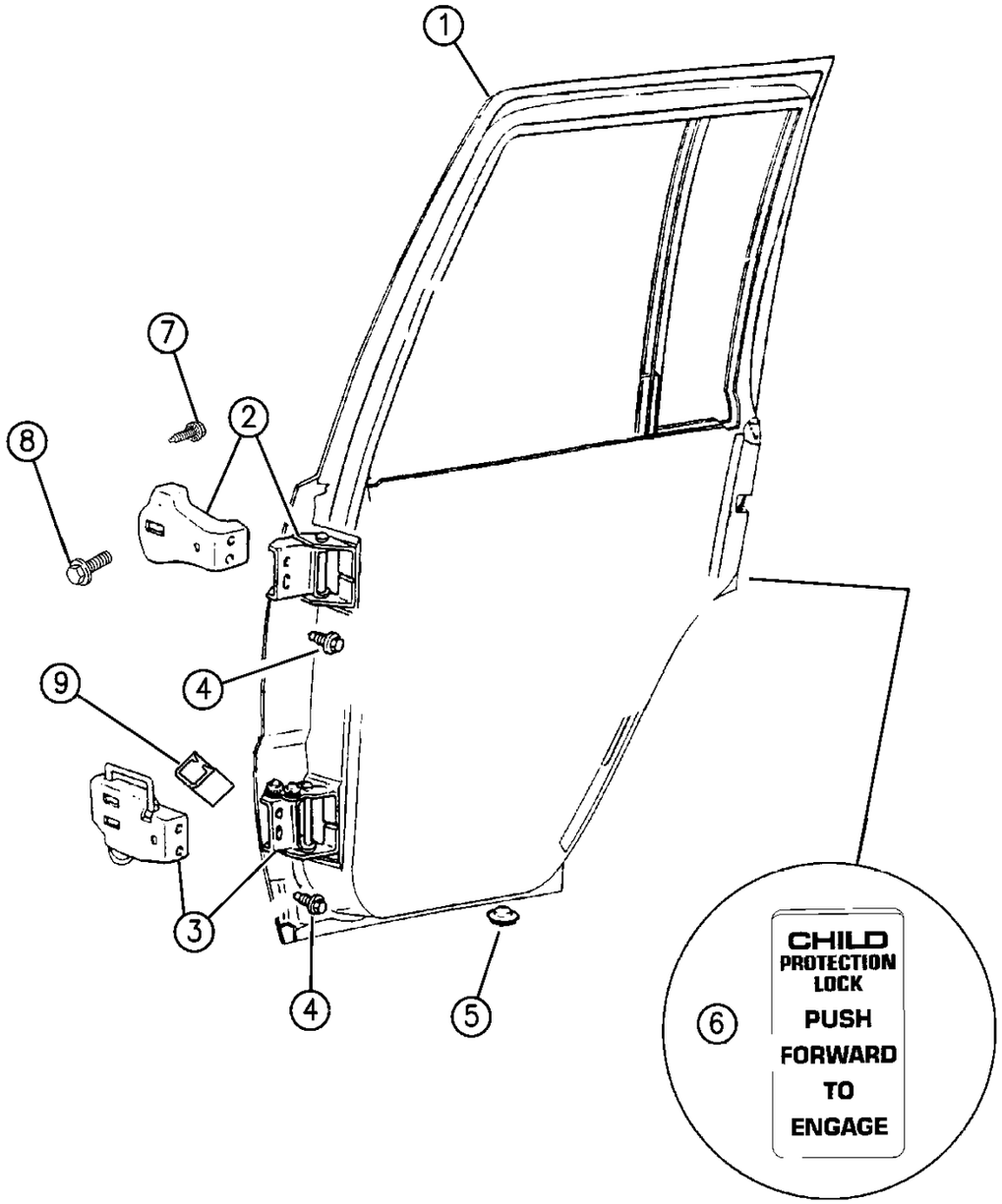

ITEM	PART NUMBER	QTY	BODY	MODEL	DESCRIPTION
1					SHELL, Rear Door, w/Hinges ***
	4746 416-7	1			1994-95
	4856 148-9	1			1996
	5503 1636-7	1			PANEL, Repair
					WATERSHIELD, Door ***
	5529 6000	1			Right
	5529 6001	1			Left
2					HINGE, Upper
	5507 6203	2			Door Half
	5507 6179	2			Body Half
	5529 5695	2	ZG		Body Half
3					HINGE, Lower
	5507 6204-5	1			Door Half
	5529 5896-7	1			Body Half
	5529 5696-7	1	ZG		Body Half
4	6502 686	8			SCREW, Hinge
5	2860 332	2			PLUG
6	4615 722	1			LABEL, Child Guard
	4615 730	1			French
7	6502 282	6			SCREW, Hinge to Pillar
8	6503 538	4			SCREW, Pillar to Hinge
9	5507 5371	2			CLIP, Torque Rod Dampener

MODEL CODES:

72=2 DR Wagon
74=4 DR Wagon
77=Open Body 93" Whlbase
78=Open Body 103" Whlbase - Export
T=2WD
J,N=4WD
U=4WD (RHD)

BODY STYLES:

YJ=Wrangler (4X4) "S"
Weangler (4X4) SE
Wrangler (4X4) Sahara
Wrangler (4X4) Renegade

XJ=Cherokee SE
Cherokee Sport
Cherokee Country

ZJ=Grand Cherokee SE
Grand Cherokee Laredo
Grand Cherolee Limited
ZG=Grand Cherokee European

Y1=Wrangler
X1=Cherokee
Z1=Grand Cherokee
KDX=Vehicles

AR = Use as Required - = Non Illustrated Part P.A.R. = Paint as Required

DOOR, REAR GLASS AND REGULATORS ZJ, ZG BODY
Figure DZJ-220

DZJ-220

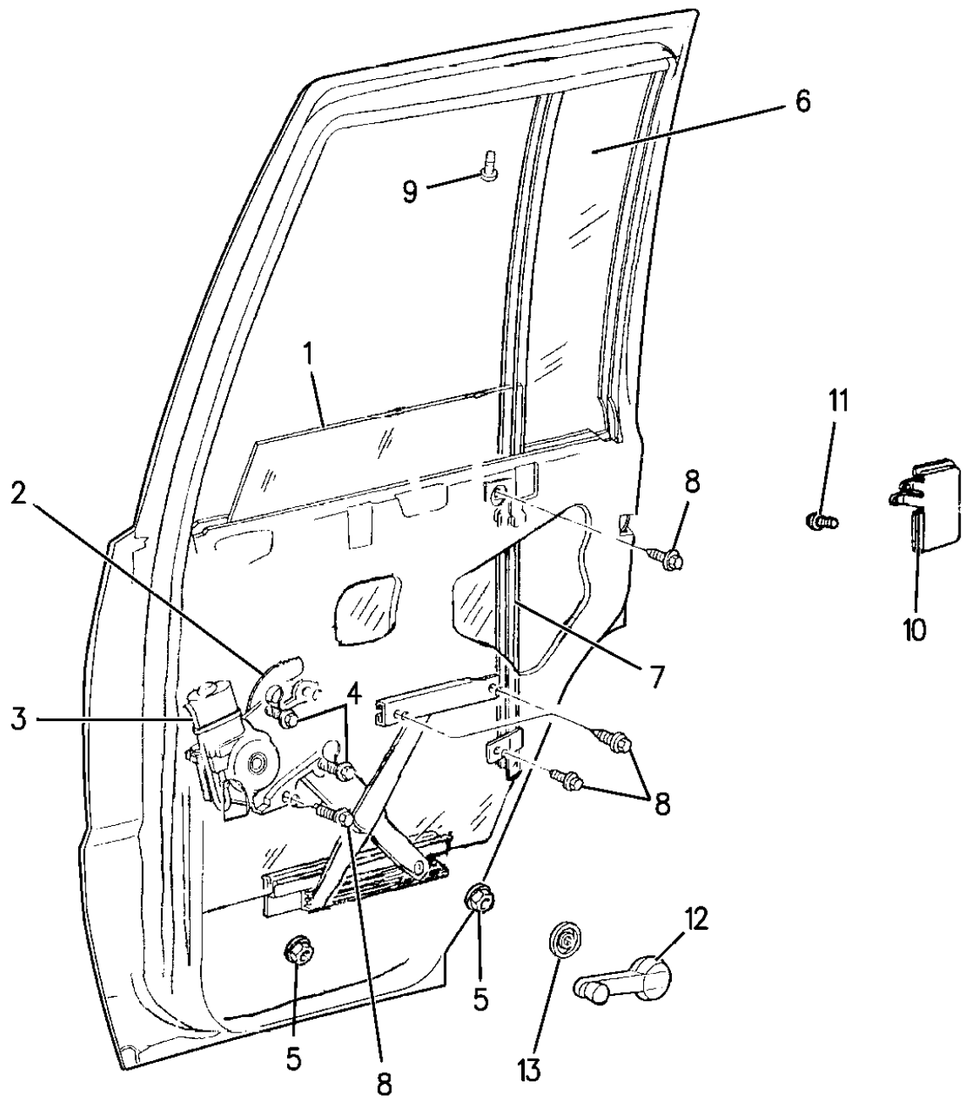

94J70 220

ITEM	PART NUMBER	QTY	BODY	MODEL	DESCRIPTION
1					GLASS, Door
	5503 2708-9	1			Tinted, 1994
	5503 3994-5	1			Sunscreen, 1994
	5507 6282				Right, EUROPE, 1994
	5507 6283	1			Left, EUROPE, 1994
	5507 6284-5	1			Tinted, 1995-96
	5525 5616-7	1			Sunscreen, 1995
	5507 6286-7	1			Sunscreen, 1996
	5507 6282	1	ZG		Right, 1995-96
	5507 6283	1	ZG		Left, 1995-96
	4396 978	1			LABEL, Door Glass, Child Care
2					REGULATOR, Window ***
	5515 4834-5	1			Manual
	4761 914-5	1			Electric
3	5515 4620-1	1			MOTOR, Regulator
4		4			SCREW, Regulator (DNS)
5	6502 691	4			NUT, Glass to Regulator
6					GLASS, Stationary, w/Frame and Seals
	5513 4968-9	1			Tinted, 1994
	5513 4982-3	1			Sunscreen, 1994
	5513 4970-1	1			Europe, 1994
	5513 4968-9	1			Tinted, 1995-96
	5525 5588-9	1			Sunscreen, 1995-96
	5513 4970-1	1			Europe, 1995-96
7	5503 1854-5	1			CHANNEL, Lower Glass Run
8		AR			SCREW (DNS)
9	0154 636	2			SCREW, Channel Upper
10	5521 4832	2			COVER, Switch, 1994
11		4			SCREW, Cover (DNS)
12	5AB8 4LX9	2			HANDLE, Regulator, 1994
13	5507 5229	2			ESCUCHEON, Handle, 1994 ***

MODEL CODES:

72=2 DR Wagon
74=4 DR Wagon
77=Open Body 93" Whlbase
78=Open Body 103" Whlbase - Export
T=2WD
J,N=4WD
U=4WD (RHD)

BODY STYLES:

YJ=Wrangler (4X4) "S"
Weangler (4X4) SE
Wrangler (4X4) Sahara
Wrangler (4X4) Renegade
XJ=Cherokee SE
Cherokee Sport
Cherokee Country
ZJ=Grand Cherokee SE
Grand Cherokee Laredo
Grand Cherolee Limited
ZG=Grand Cherokee European
Y1=Wrangler
X1=Cherokee
Z1=Grand Cherokee
KDX=Vehicles

AR = Use as Required - = Non Illustrated Part P.A.R. = Paint as Required

DOORS, REAR LOCK AND CONTROLS ZJ, ZG BODY
Figure DZJ-230

DZJ-230

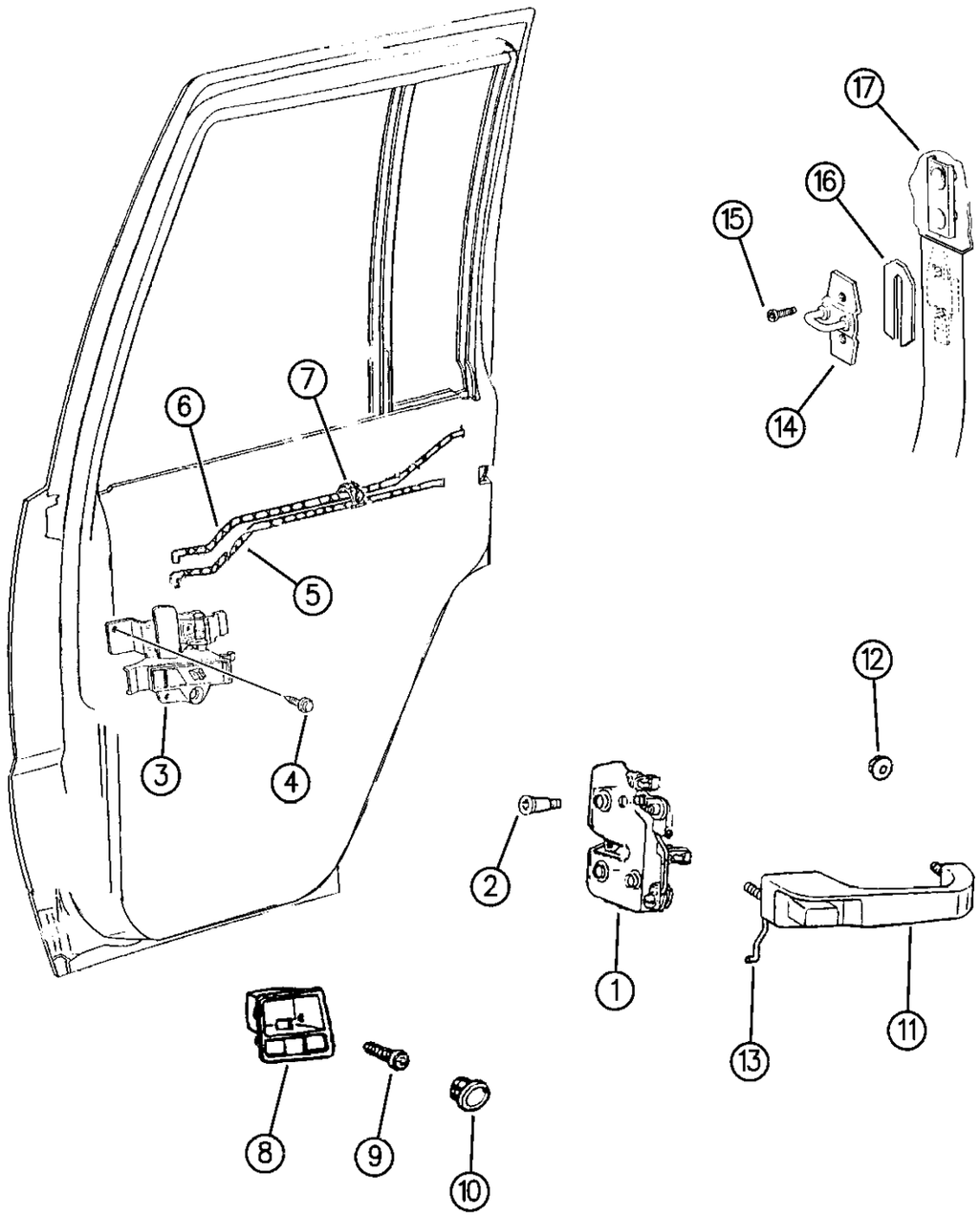

ITEM	PART NUMBER	QTY	BODY	MODEL	DESCRIPTION
1		1			LATCH, Door
	5507 4806-7				w/o Power Locks
	4798 916-7				w/Power Locks
2	6033 876	6			SCREW, Latch
3					CONTROL, Remote
	5507 5620-1	1			w/o Limited Pkg.
	5507 5622-3	1			w/Limited Pkg.
4		4			SCREW (DNS)
5	5507 4830-1	1			ROD, Lock Lever to Latch
6	5507 4832-3	1			ROD, Release Lever to Latch
7	3882 620	2			CLIP, Anti-Rattle
8	5521 5884-5	1			BEZEL, Remote Control
9		6			SCREW (DNS)
10	5521 4828	2			PLUG, Bezel Screw
11	5507 5654-5	1			HANDLE, Exterior
12	6503 226	4			NUT, Exterior Handle
13	5503 0098-9	1			ROD, Exterior Handle to Latch
14	4520 288	2			STRIKER, Latch
15					SPACER, Striker
	4520 289	AR			
	5507 5483	AR			(2.0/2.5)
16	6503 530	2			SCREW, Striker
17	5525 6000	2			PLATE, Striker Tapping

MODEL CODES:

72=2 DR Wagon
74=4 DR Wagon
77=Open Body 93" Whlbase
78=Open Body 103" Whlbase - Export
T=2WD
J,N=4WD
U=4WD (RHD)

BODY STYLES:

YJ=Wrangler (4X4) "S"
Weangler (4X4) SE
Wrangler (4X4) Sahara
Wrangler (4X4) Renegade
XJ=Cherokee SE
Cherokee Sport
Cherokee Country
ZJ=Grand Cherokee SE
Grand Cherokee Laredo
Grand Cherolee Limited
ZG=Grand Cherokee European
Y1=Wrangler
X1=Cherokee
Z1=Grand Cherokee
KDX=Vehicles

AR = Use as Required - = Non Illustrated Part P.A.R. = Paint as Required

« RETURN TO GROUP INDEX

MIRRORS, EXTERIOR ZJ, ZG BODY
Figure DZJ-510

DZJ-510

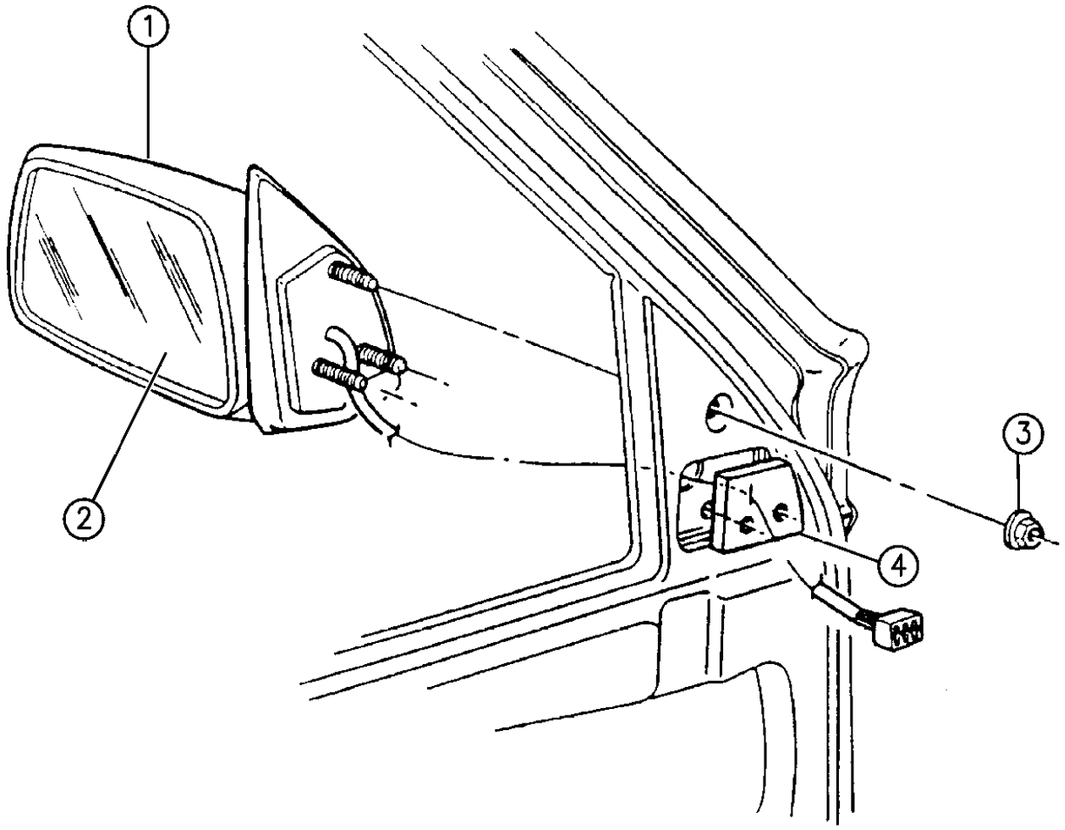

94J70 510

ITEM	PART NUMBER	QTY	BODY	MODEL	DESCRIPTION
1					MIRROR ASSEMBLY ***
	5507 5660-1	1			Manual, 1994
	5515 4810-1	1			Electric (Non Heated) 1994
					Electric (Heated) 1994
	5507 5666-7	1			w/o Limited Pkg.
	5507 5680-1	1			Europe
					w/Limited Pkg., 1994
	5DW90-1 PC9	1			Blue
	5DW90-1 PFA	1			Driftwood
	5DW90-1 PG5	1			Green
	5DW90-1 PR4	1			Red
	5DW90-1 PX8	1			Black
	5DW90-1 PW7	1			White
	5507 5660-1	1			Manual, 1995
	5305 4162-3	1	ZG		Manual, Chrome RHD
	5515 4914-5	1			Electric (Non Heated) 1995
					Electric (Heated)
	5515 5078-9	1			w/o Limited Pkg.
					w/Limited Pkg.
	5ER44-5 RFA	1			Driftwood
	5ER44-5 RW7	1			White
	5ER44-5 RX8	1			Black
	5ER44-5 RC9	1			Blue
	5ER44-5 RG5	1			Dk. Green
	5ER44-5 RJN	1			Med. Green
	5ER44-5 RJ7	1			Khaki (Char-Gold)
	5ER44-5 RR4	1			Red
					Electric Painted Heated Breakaway, 1996
	5515 4802	1			Right
	5515 4803	1			Left
					Electric Heated Memory Electrochromic Breakaway, 1996
					RIGHT
	5DV0 4SCW	1			Iris
	5DV0 4SC5	1			Light Blue
	5DV0 4SC9	1			Dark Blue
	5DV0 4SEG	1			Rosewood
	5DV0 4SFA	1			Driftwood
	5DV0 4SG8	1			Forest Green
	5DV0 4SJN	1			Moss Green
	5DV0 4SJ7	1			Khaki
	5DV0 4SR4	1			Red
	5DV0 4SW1	1			White

MODEL CODES:

72=2 DR Wagon
74=4 DR Wagon
77=Open Body 93" Whlbase
78=Open Body 103" Whlbase - Export
T=2WD
J,N=4WD
U=4WD (RHD)

BODY STYLES:

YJ=Wrangler (4X4) "S"
Weangler (4X4) SE
Wrangler (4X4) Sahara
Wrangler (4X4) Renegade

XJ=Cherokee SE
Cherokee Sport
Cherokee Country

ZJ=Grand Cherokee SE
Grand Cherokee Laredo
Grand Cherolee Limited
ZG=Grand Cherokee European

Y1=Wrangler
X1=Cherokee
Z1=Grand Cherokee
KDX=Vehicles

AR = Use as Required - = Non Illustrated Part P.A.R. = Paint as Required

MIRRORS, EXTERIOR ZJ, ZG BODY
Figure DZJ-510

DZJ-510

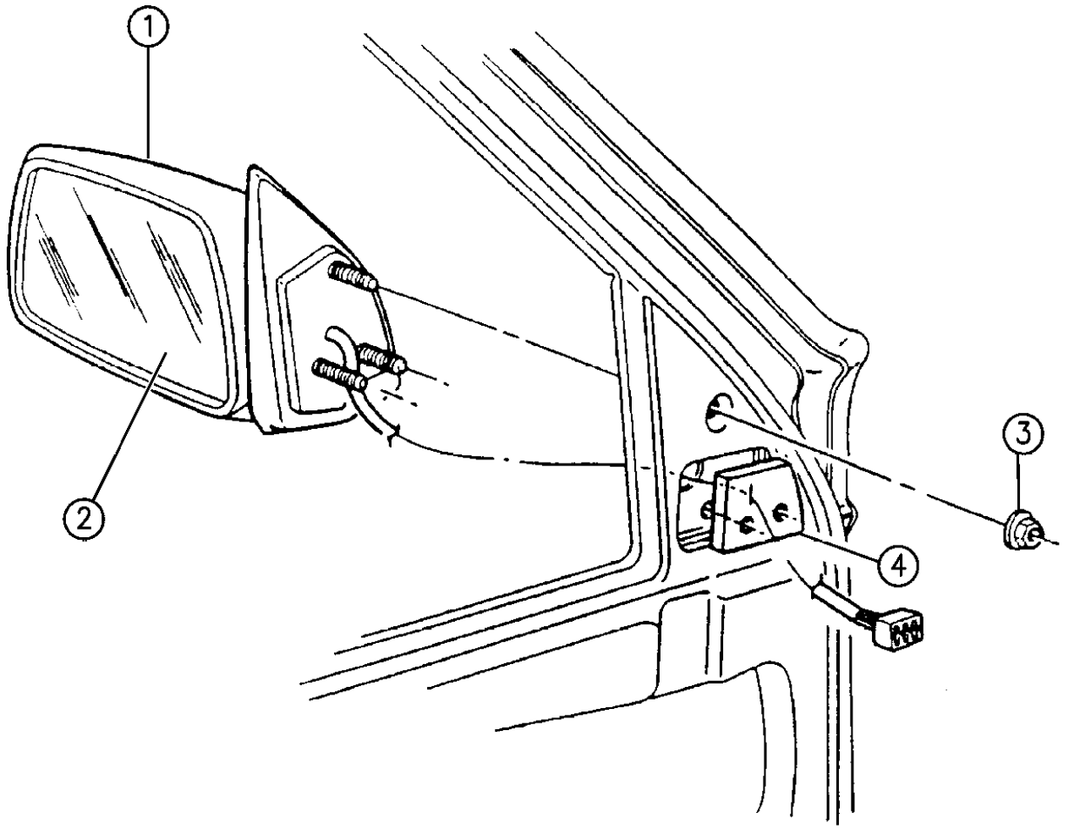

94J70 510

ITEM	PART NUMBER	QTY	BODY	MODEL	DESCRIPTION
	5DV0 4SW7	1			Bright White
	5DV0 4SX8	1			Black
					LEFT
	5DV0 5SCW	1			Iris
	5DV0 5SC5	1			Light Blue
	5DV0 5SC9	1			Dark Blue
	5DV0 5SEG	1			Rosewood
	5DV0 5SFA	1			Driftwood
	5DV0 5SG8	1			Forest Green
	5DV0 5SJN	1			Moss Green
	5DV0 5SJ7	1			Khaki
	5DV0 5SR4	1			Red
	5DV0 5SW1	1			White
	5DV0 5SW7	1			Bright White
	5DV0 5SX8	1			Black
	5EC84-5 SW7	1	ZG		Electrochromic Memory, 1996 RHD. P.A.R.
2					GLASS, Mirror
	4723 786-7	1			Electric (Non Heated) 1994
					Electric (Heated) 1994
	4723 788-9	1			w/o Limited Pkg.
	4778 244-5	1			w/Limited Pkg.
	4856 518-9	1			Electric (Non Heated) 1995
					Electric (Heated)
	4778 246-7	1			1995
	4856 532-3	1			1996
	4856 537	1			Left Electrochromic, 1996
3	J420 0408	6			NUT
4	5513 4980-1	1			SEAL, Mirror

MODEL CODES:

72=2 DR Wagon
74=4 DR Wagon
77=Open Body 93" Whlbase
78=Open Body 103" Whlbase - Export
T=2WD
J,N=4WD
U=4WD (RHD)

BODY STYLES:

YJ=Wrangler (4X4) "S"
Weangler (4X4) SE
Wrangler (4X4) Sahara
Wrangler (4X4) Renegade
XJ=Cherokee SE
Cherokee Sport
Cherokee Country
ZJ=Grand Cherokee SE
Grand Cherokee Laredo
Grand Cherolee Limited
ZG=Grand Cherokee European
Y1=Wrangler
X1=Cherokee
Z1=Grand Cherokee
KDX=Vehicles

AR = Use as Required - = Non Illustrated Part P.A.R. = Paint as Required

DOOR, FRONT WEATHERSTRIPS AND SEALS ZJ, ZG BODY
Figure DZJ-610

DZJ-610

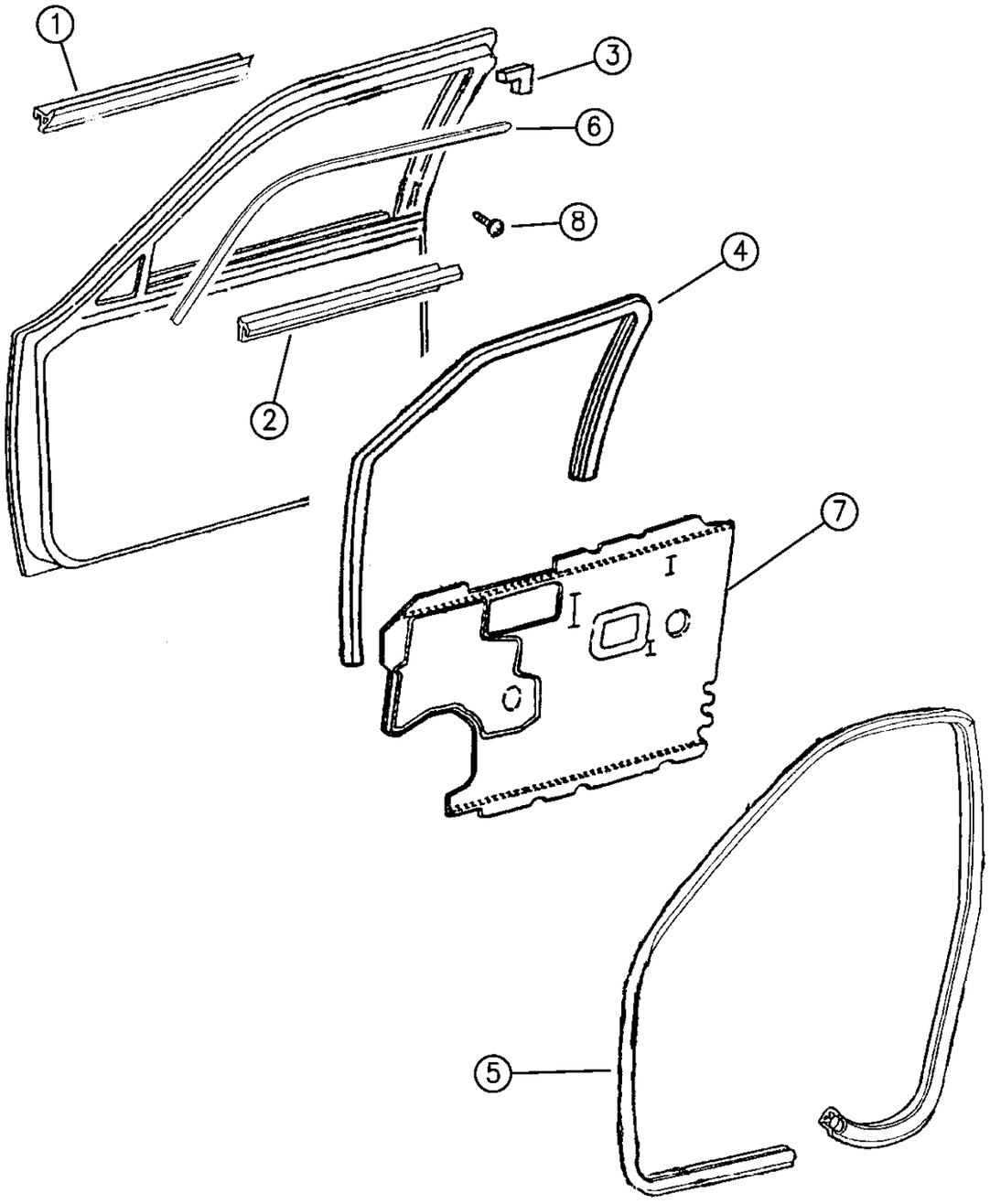

ITEM	PART NUMBER	QTY	BODY	MODEL	DESCRIPTION
1	5513 5168-9	1			WEATHERSTRIP, Outer
2	5513 4862-3	1			WEATHERSTRIP, Inner
3		AR			FOAM (DNS) ***
4					SEAL, Glass Run Channel
	5513 5194-5	1			1994-95, Up To 3-7-94
	5525 5456-7	1			1995, After 3-7-94
	5529 5700-1	1			1996
5	5513 4722-3	1			WEATHERSTRIP, Door
6	5513 4570-1	1			SEAL, Upper
7	5513 5008-9	1			INSULATOR, Door ***
8	6502 811	2			SCREW

MODEL CODES:

72=2 DR Wagon
74=4 DR Wagon
77=Open Body 93" Whlbase
78=Open Body 103" Whlbase - Export
T=2WD
J,N=4WD
U=4WD (RHD)

BODY STYLES:

YJ=Wrangler (4X4) "S"
Weangler (4X4) SE
Wrangler (4X4) Sahara
Wrangler (4X4) Renegade
XJ=Cherokee SE
Cherokee Sport
Cherokee Country
ZJ=Grand Cherokee SE
Grand Cherokee Laredo
Grand Cherolee Limited
ZG=Grand Cherokee European
Y1=Wrangler
X1=Cherokee
Z1=Grand Cherokee
KDX=Vehicles

AR = Use as Required - = Non Illustrated Part P.A.R. = Paint as Required

« RETURN TO GROUP INDEX

DOOR, REAR WEATHERSTRIPS AND SEALS ZJ, ZG BODY
Figure DZJ-620

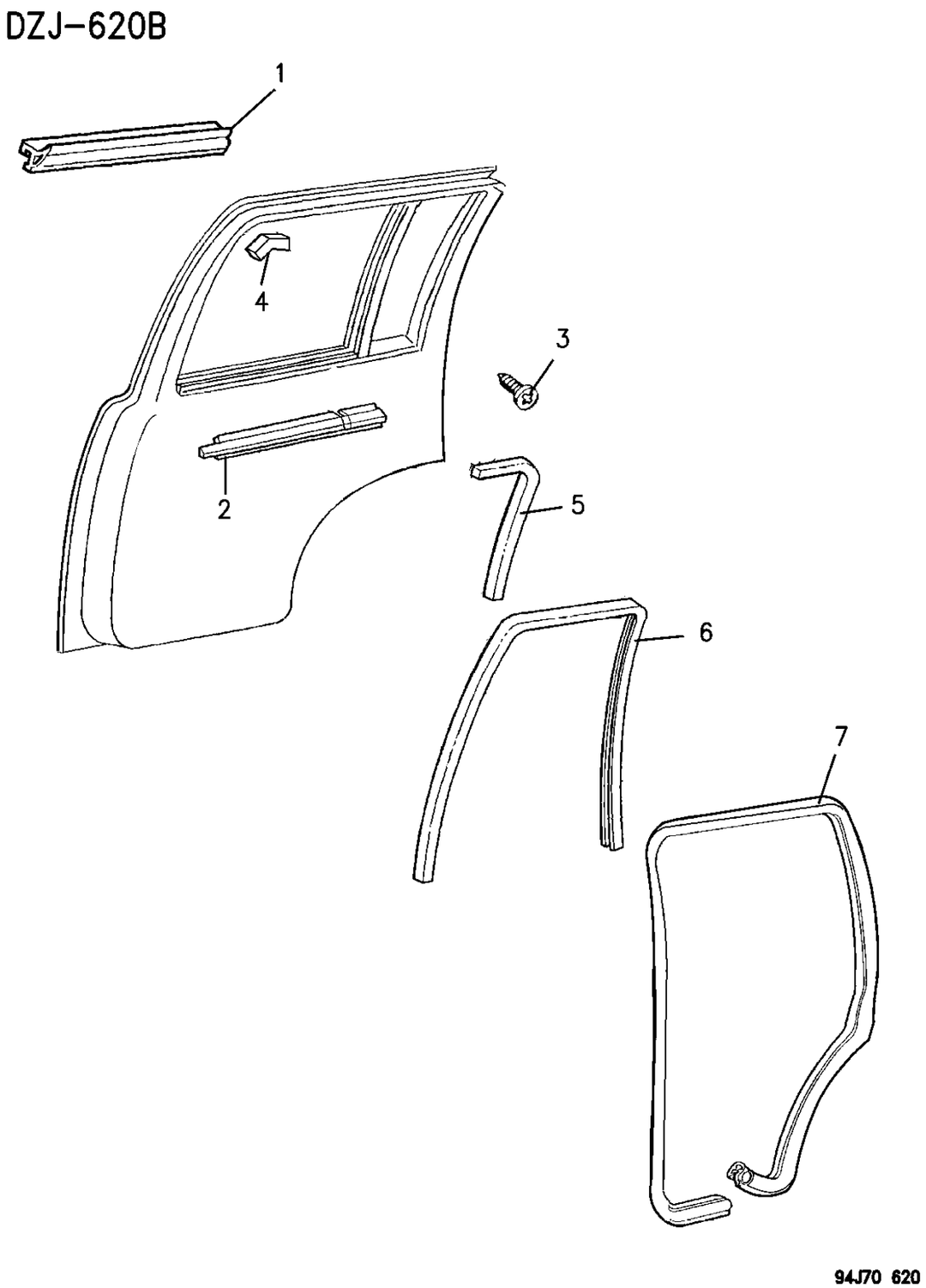

ITEM	PART NUMBER	QTY	BODY	MODEL	DESCRIPTION
1	5513 5170-1	1			WEATHERSTRIP, Outer
2	5513 4964-5	1			WEATHERSTRIP, Inner
3	6502 811	2			SCREW
4		AR			FOAM (DNS) ***
5		AR			FOAM (DNS) ***
6					SEAL, Glass Run Channel
	5513 5186-7	1			Up To 3-7-94
	5525 5458-9	1			After 3-7-94
7	5513 4724-5	1			WEATHERSTRIP, Door

MODEL CODES:

72=2 DR Wagon
74=4 DR Wagon
77=Open Body 93" Whlbase
78=Open Body 103" Whlbase - Export
T=2WD
J,N=4WD
U=4WD (RHD)

BODY STYLES:

YJ=Wrangler (4X4) "S"
Weangler (4X4) SE
Wrangler (4X4) Sahara
Wrangler (4X4) Renegade
XJ=Cherokee SE
Cherokee Sport
Cherokee Country
ZJ=Grand Cherokee SE
Grand Cherokee Laredo
Grand Cherolee Limited
ZG=Grand Cherokee European
Y1=Wrangler
X1=Cherokee
Z1=Grand Cherokee
KDX=Vehicles

AR = Use as Required - = Non Illustrated Part P.A.R. = Paint as Required

« RETURN TO GROUP INDEX

SAGIPARTS

GROUP-23D
CYLINDER & KEYS AND WASHER & WIPER SYSTEM

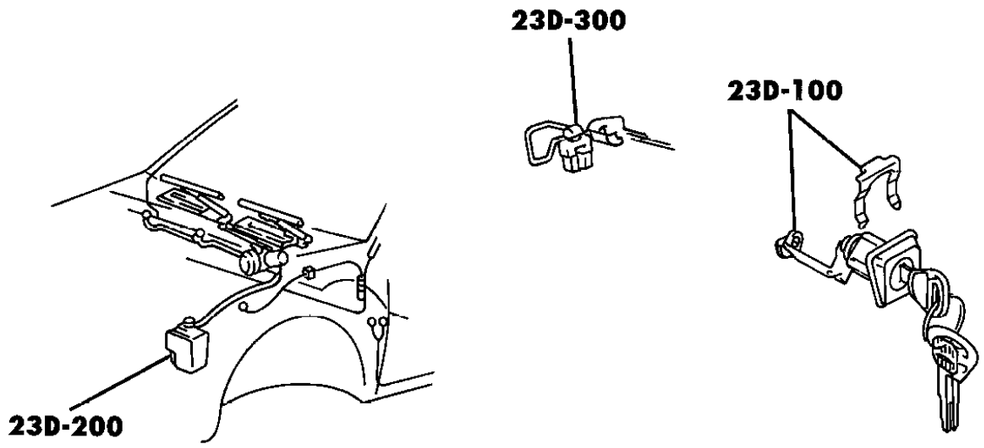

23D-100	23D-200 WINDSHIELD WIPER & WASHER	23D-300 REAR WINDOW WIPER & WASHER	
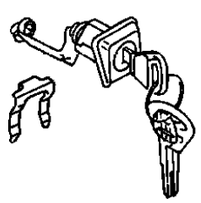	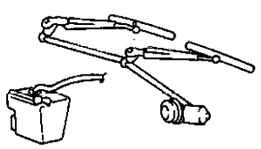	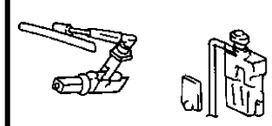	

GROUP 23D - WIPER & WASHER AND CYLINDER & KEYS

ILLUSTRATION TITLE	GROUP-FIG. NO.
LOCK CYLINDERS AND KEYS	
LOCK CYLINDERS AND KEYS WRANGLER YJ	Fig. 23D-110
LOCK CYLINDERS AND KEYS CHEROKEE XJ	Fig. 23D-120
LOCK CYLINDERS AND KEYS GRAND CHEROKEE ZJ	Fig. 23D-130
DOUBLE BITTED LOCK CYLINDER REPAIR COMPONENTS WRANGLER YJ, CHEROKEE XJ, GRAND CHEROKEE ZJ	Fig. 23D-140
WINDSHIELD WIPER AND WASHER SYSTEM	
WINDSHIELD WIPER AND WASHER WRANGLER YJ	Fig. 23D-210
WINDSHIELD WIPER AND WASHER CHEROKEE XJ	Fig. 23D-220
WINDSHIELD WIPER AND WASHER GRAND CHEROKEE ZJ	Fig. 23D-230
REAR WIPER AND WASHER SYSTEM	
REAR WIPER AND WASHER WRANGLER YJ	Fig. 23D-310
REAR WIPER AND WASHER CHEROKEE XJ	Fig. 23D-320
REAR WIPER AND WASHER GRAND CHEROKEE ZJ	Fig. 23D-330

LOCK CYLINDERS AND KEYS WRANGLER YJ
Figure 23D-110

23D-110

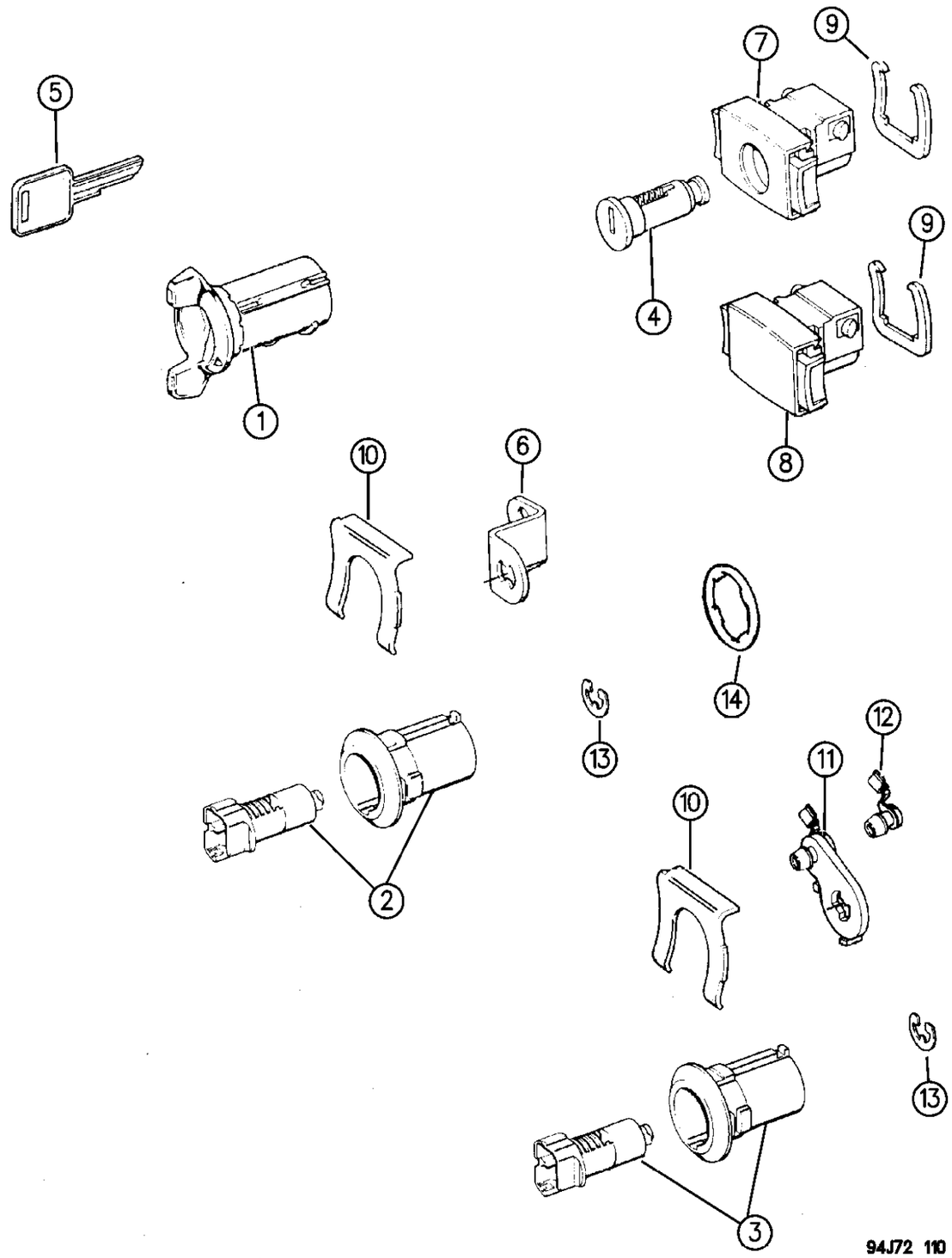

ITEM	PART NUMBER	QTY	BODY	MODEL	DESCRIPTION
NOTE: ALL CYLINDERS ARE UNCODED e Adhesive #312.					
1	4746 285	1			CYLINDER, Ignition Lock
2					CYLINDER, Door Lock
	4720 931	1			1994
	4778 123	1			1995
3					CYLINDER, Tailgate Lock
	4746 311	1			1994
	4778 123	1			1995
4	4746 286	1			CYLINDER, Glovebox Lock
5	4746 316	1			KEY, Blank
6					LEVER, Door Lock Cylinder
	5257 154	2			Soft Top
	5507 6242-3	1			Hard Top
7					HOUSING, Glovebox Latch, Lock
	5BL1 4KY6	1			Sand
	5BL1 4KA8	1			Charcoal
8	5507 4510	1			HOUSING, Non-Locking
9	5500 6506	1			RETAINER, Glovebox Cylinder
10	2583 377	AR			RETAINER, Door, Tailgate Cylinder
11	5257 153	1			LEVER, Tailgate Cylinder
12	J400 4533	1			CLIP, w/Bushing
13	J400 2250	AR			RETAINER, Cylinder
14	5507 4799	AR			GASKET, Lock Cylinder

MODEL CODES:

72=2 DR Wagon
74=4 DR Wagon
77=Open Body 93" Whlbase
78=Open Body 103" Whlbase - Export
T=2WD
J,N=4WD
U=4WD (RHD)

BODY STYLES:

YJ=Wrangler (4X4) "S"
Weangler (4X4) SE
Wrangler (4X4) Sahara
Wrangler (4X4) Renegade
XJ=Cherokee SE
Cherokee Sport
Cherokee Country
ZJ=Grand Cherokee SE
Grand Cherokee Laredo
Grand Cherolee Limited
ZG=Grand Cherokee European
Y1=Wrangler
X1=Cherokee
Z1=Grand Cherokee
KDX=Vehicles

AR = Use as Required - = Non Illustrated Part P.A.R. = Paint as Required

« RETURN TO GROUP INDEX

LOCK CYLINDERS AND KEYS CHEROKEE XJ
Figure 23D-120

23D-120

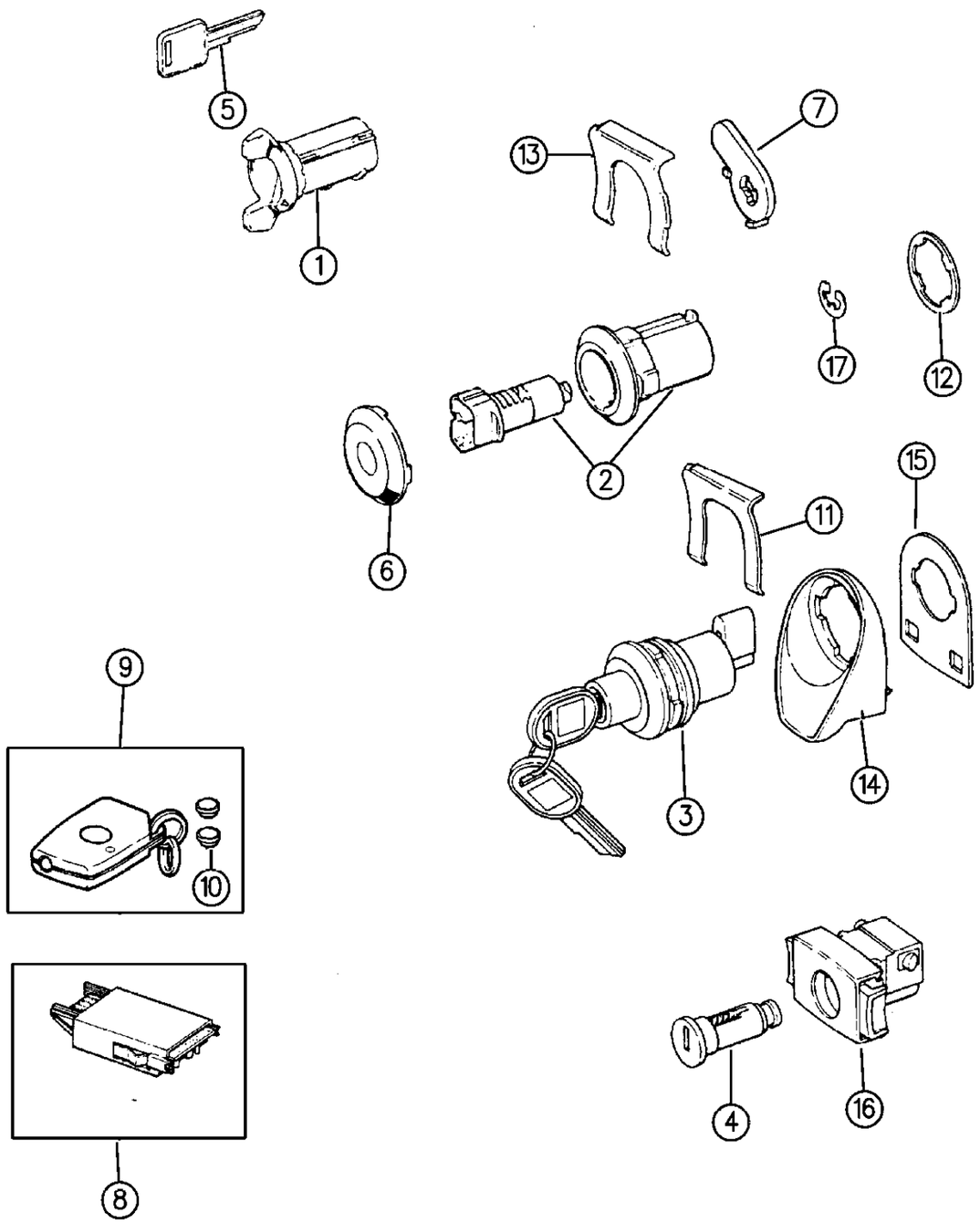

ITEM	PART NUMBER	QTY	BODY	MODEL	DESCRIPTION
NOTE: ALL CYLINDERS ARE UNCODED e Adhesive #312.					
1					CYLINDER, Ignition Lock
	4746 285	1			1994
	4778 122	1			1995-96
2					CYLINDER, Door Lock
	4720 931	1			1994
	4778 123	1			1995-96
3					CYLINDER, Liftgate Lock
	4746 293	1			1994
	4778 362	1			1995-96
4	4746 286	1			CYLINDER, Glovebox Lock
5	4746 316	AR			KEY, Blank
6					CAP, Lock Cylinder Service
					Door
	5257 152	2			Bright
	5257 148	2			Black
					Liftgate
	4637 588	AR			Inner, Bright
	4637 589	AR			Outer, Bright
	4637 590	AR			Inner, Black
	4637 591	AR			Outer, Black
7					LEVER, Door Cylinder
	5507 4504	AR			Right 1994
	4746 680	AR			Left 1994
	5507 5824	2			1995-96
8		1			MODULE, Keyless Entry w/Receiver Lens (Cover)
	5600 7164				w/Overhead Console
	5600 6908				w/o Overhead Console
9	5600 9031	1			TRANSMITTER, Keyless Entry ***
10	4746 217	AR			BATTERY, Transmitter ***
11	J367 9995	1			RETAINER, Tailgate Lock
12	5507 4799	1			GASKET
13	2583 377	2			RETAINER, Cylinder
14	5500 1135	1			HANDLE
15	5507 5375	1			GASKET
16					LATCH
	5BL1 4KA8	1			Charcoal
	5BL1 4KY6	1			Tan
17	4336 136	2			CLIP, Lever

MODEL CODES:

72=2 DR Wagon
74=4 DR Wagon
77=Open Body 93" Whlbase
78=Open Body 103" Whlbase - Export
T=2WD
J,N=4WD
U=4WD (RHD)

BODY STYLES:

YJ=Wrangler (4X4) "S"
Weangler (4X4) SE
Wrangler (4X4) Sahara
Wrangler (4X4) Renegade

XJ=Cherokee SE
Cherokee Sport
Cherokee Country

ZJ=Grand Cherokee SE
Grand Cherokee Laredo
Grand Cherolee Limited
ZG=Grand Cherokee European

Y1=Wrangler
X1=Cherokee
Z1=Grand Cherokee
KDX=Vehicles

AR = Use as Required - = Non Illustrated Part P.A.R. = Paint as Required

« RETURN TO GROUP INDEX

LOCK CYLINDERS AND KEYS GRAND CHEROKEE ZJ
Figure 23D-130

23D-130D

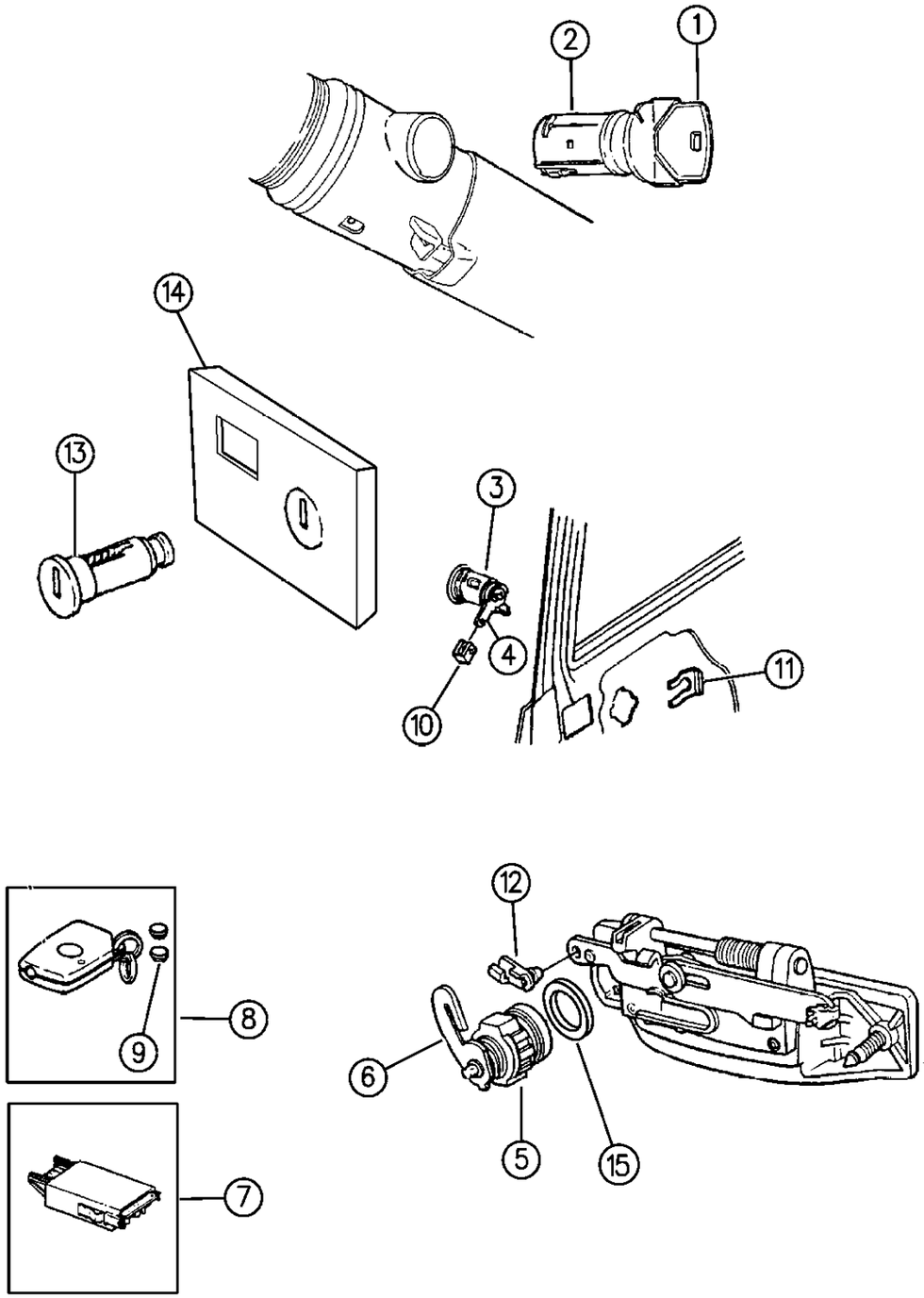

ITEM	PART NUMBER	QTY	BODY	MODEL	DESCRIPTION
NOTE: ALL CYLINDERS ARE UNCODED e Adhesive #312.					
1					KEY
	4746 316	AR			Blank
	5507 5488	AR			Valet
2	4778 122	1			CYLINDER, Ignition Lock
3					CYLINDER, Door Lock
	4720 931	2			1994
	4778 123	2			1995
	4864 651				1996
4					LEVER, Door Cylinder
	5257 154	2			1994
	5507 5824	2			1995-96
-	5529 5864	1			GASKET (Black) 1996 ***
5					CYLINDER, Liftgate Lock
	4746 314	1			1994
	4778 125	1			1995-96
6					LEVER, Liftgate Cylinder
	5502 6471	1			1994
	5507 5838	1			1995-96
7	5600 7164	1			MODULE, Keyless Entry
8		1			TRANSMITTER, Keyless Entry ***
	5600 6909				1994-95
	5600 8761		ZJZG		1996 (Driver # 1)
	5600 8762		ZJZG		1996 (Driver # 2)
	5604 2277		ZGZ1		1996 Export (Driver # 1) R.H.D.
	5604 2278				1996 Export (Driver # 2) R.H.D.
	4686 255	2	ZG		1996 (RHD)
9	4746 217	AR			BATTERY, Transmitter ***
10		2			CLIP
	4336 136				1994
	4658 444				1995-6 (Purple)
	4658 445				1995-96 (Orange)
11		AR			RETAINER, Cylinder
	2583 377				1994-95
	5529 6030				1996 Right
	5529 6031				1996 Left
12	5507 5139	1			CLIP
13	4746 315	1			CYLINDER, Glovebox Lock
	4874 919				1996
14		1			HOUSING, Latch Lock
	5511 4911				Non-Locking (Black)
	4746 419				Locking

MODEL CODES:

72=2 DR Wagon
74=4 DR Wagon
77=Open Body 93" Whlbase
78=Open Body 103" Whlbase - Export
T=2WD
J,N=4WD
U=4WD (RHD)

BODY STYLES:

YJ=Wrangler (4X4) "S"
Weangler (4X4) SE
Wrangler (4X4) Sahara
Wrangler (4X4) Renegade
XJ=Cherokee SE
Cherokee Sport
Cherokee Country
ZJ=Grand Cherokee SE
Grand Cherokee Laredo
Grand Cherolee Limited
ZG=Grand Cherokee European
Y1=Wrangler
X1=Cherokee
Z1=Grand Cherokee
KDX=Vehicles

AR = Use as Required - = Non Illustrated Part P.A.R. = Paint as Required

LOCK CYLINDERS AND KEYS GRAND CHEROKEE ZJ
Figure 23D-130

23D-130D

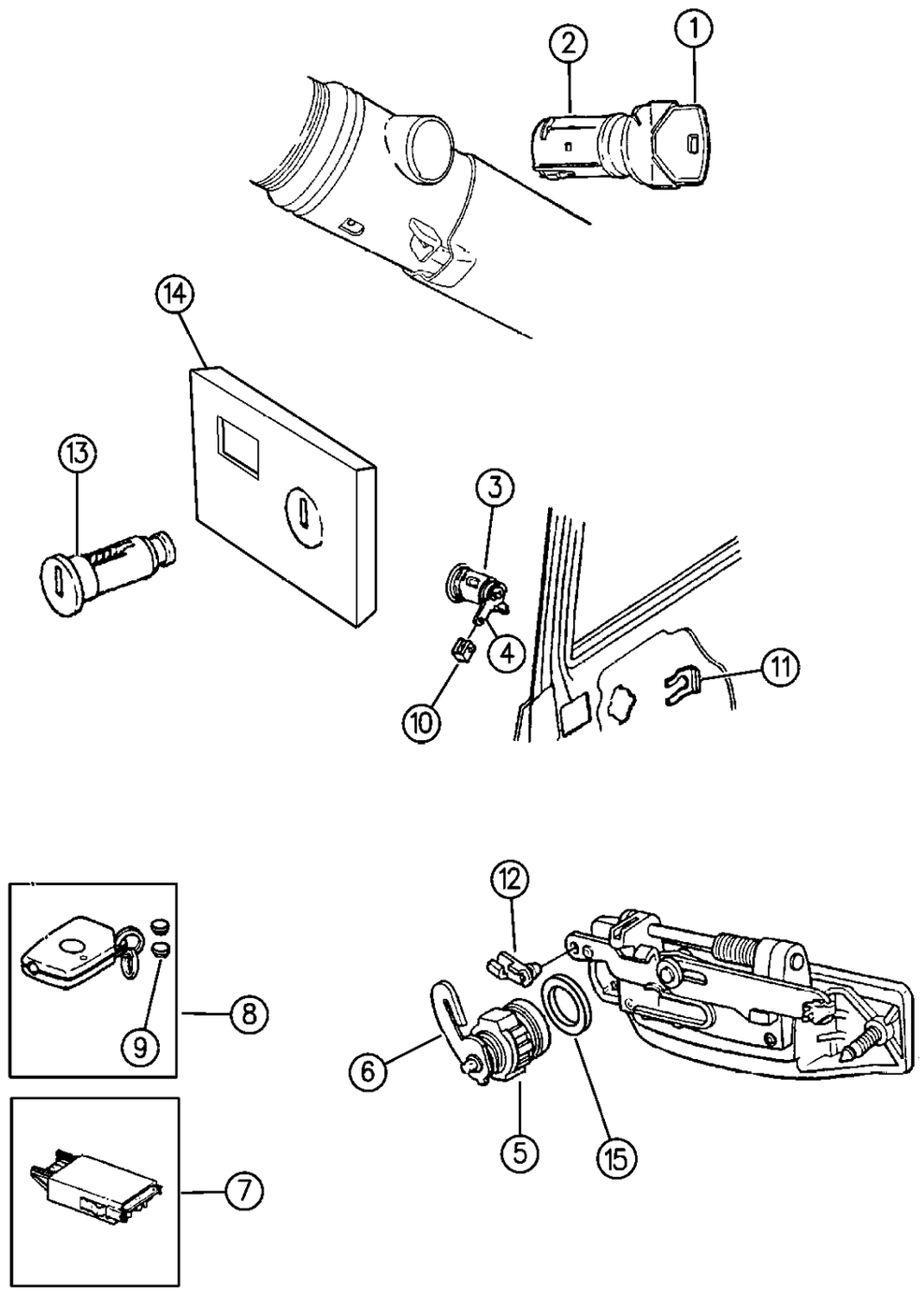

ITEM	PART NUMBER	QTY	BODY	MODEL	DESCRIPTION
15	5507 4799	AR			GASKET, Door, Liftgate Cylinder

MODEL CODES:

72=2 DR Wagon
74=4 DR Wagon
77=Open Body 93" Whlbase
78=Open Body 103" Whlbase - Export
T=2WD
J,N=4WD
U=4WD (RHD)

BODY STYLES:

YJ=Wrangler (4X4) "S"
Weangler (4X4) SE
Wrangler (4X4) Sahara
Wrangler (4X4) Renegade
XJ=Cherokee SE
Cherokee Sport
Cherokee Country
ZJ=Grand Cherokee SE
Grand Cherokee Laredo
Grand Cherolee Limited
ZG=Grand Cherokee European
Y1=Wrangler
X1=Cherokee
Z1=Grand Cherokee
KDX=Vehicles

AR = Use as Required - = Non Illustrated Part P.A.R. = Paint as Required

DOUBLE BITTED LOCK CYLINDER REPAIR COMPONENTS WRANGLER YJ, CHEROKEE XJ, GRAND CHEROKEE ZJ
Figure 23D-140

23D-140A

DOOR LOCK
SERVICE PACKAGE UNCODED

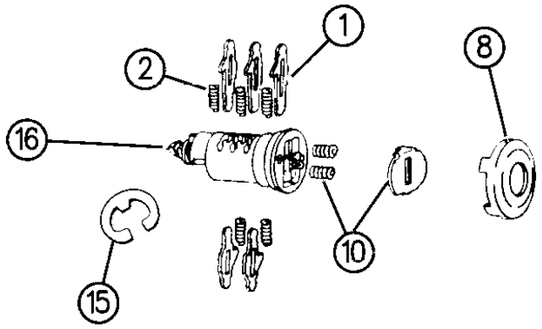

TILT IGNITION
LOCK SERVICE PACKAGE UNCODED

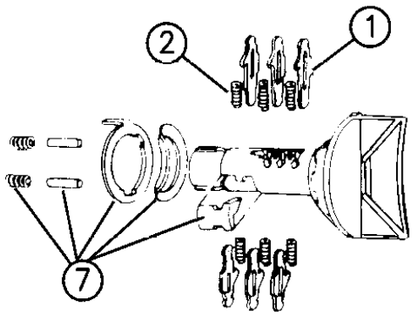

L/GATE LOCK
SERVICE PACKAGE UNCODED

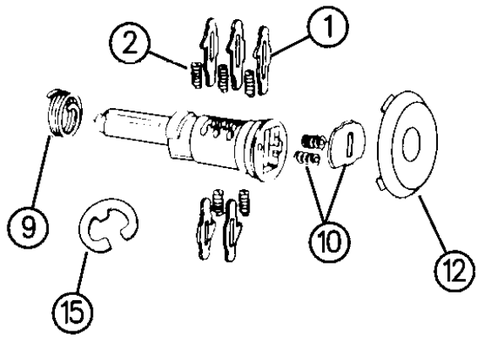

PUSH TO LOCK (PTL) AND
STANDARD COLUMN IGNITION
LOCK SERVICE PACKAGE UNCODED

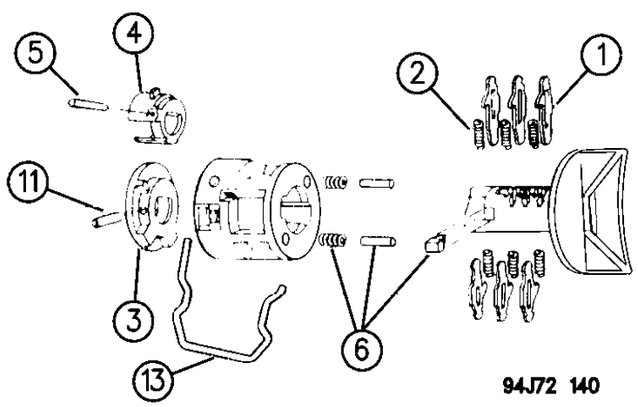

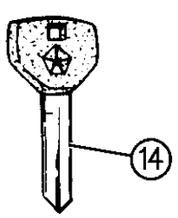

ITEM	PART NUMBER	QTY	BODY	MODEL	DESCRIPTION
		1			SERVICE and REPAIR PACKAGE, Lock Cylinder
	4720 457				1994
					1995-96 (Serviced In Component Parts)
1					TUMBLER, Cylinder ***
					Ignition
	5257 132	AR			#1
	5257 133	AR			#2
	5257 134	AR			#3
	5257 135	AR			#4 (1994)
	4778 120	AR			#4 (1995-96)
					Door/Deck, (Wide)
	4778 117	AR			#1
	4778 118	AR			#2
	4778 119	AR			#3
	4778 120	AR			#4
2					SPRING, Tumbler
	4746 873	AR			Ignition
	4778 121	AR			Door/Deck, (Wide)
3	4378 785	AR			DRIVER, Ignition Lock Cylinder, Standard ***
4	5257 137	AR			DRIVER, Ignition Lock Cylinder, Push to Lock ***
5	4378 787	AR			DRIVER, Ignition Lock Cylinder, Spiral Pin ***
6	4378 786	AR			PRE-PACK, Ignition Cylinder, w/o Tilt ***
7	4378 789	AR			PRE-PACK, Ignition Cylinder, w/Tilt ***
8					CAP, Door Cylinder
	5257 152	AR	YJXJZJ		Bright
	5257 148	AR	YJXJ		Black
	5257 148	AR	ZJ		Black 1994-95
	4882 178	AR	ZJ		Black 1996
9	4378 793	AR			SPRING, Door Cylinder Return
10					SHUTTER, Door and L/Gate ***
	4378 816	AR			Bright
	4378 791	AR			Black
11	6101 638	AR			PIN, Spiral
12	5257 148	AR			CAP, L/Gate Cylinder
13	4480 116	AR			RETAINER, Cylinder
14					KEY
	4378 751	AR			Blank, Capsulated
	4378 753	AR			Valet
15	6032 107	AR			CLIP, "C"
16	5507 5824-5	AR			LEVER, Lock Cylinder

MODEL CODES:

72=2 DR Wagon
74=4 DR Wagon
77=Open Body 93" Whlbase
78=Open Body 103" Whlbase - Export
T=2WD
J,N=4WD
U=4WD (RHD)

BODY STYLES:

YJ=Wrangler (4X4) "S"
Weangler (4X4) SE
Wrangler (4X4) Sahara
Wrangler (4X4) Renegade
XJ=Cherokee SE
Cherokee Sport
Cherokee Country
ZJ=Grand Cherokee SE
Grand Cherokee Laredo
Grand Cherolee Limited
ZG=Grand Cherokee European
Y1=Wrangler
X1=Cherokee
Z1=Grand Cherokee
KDX=Vehicles

AR = Use as Required - = Non Illustrated Part P.A.R. = Paint as Required

« RETURN TO GROUP INDEX

WINDSHIELD WIPER AND WASHER WRANGLER YJ
Figure 23D-210

23D-210A

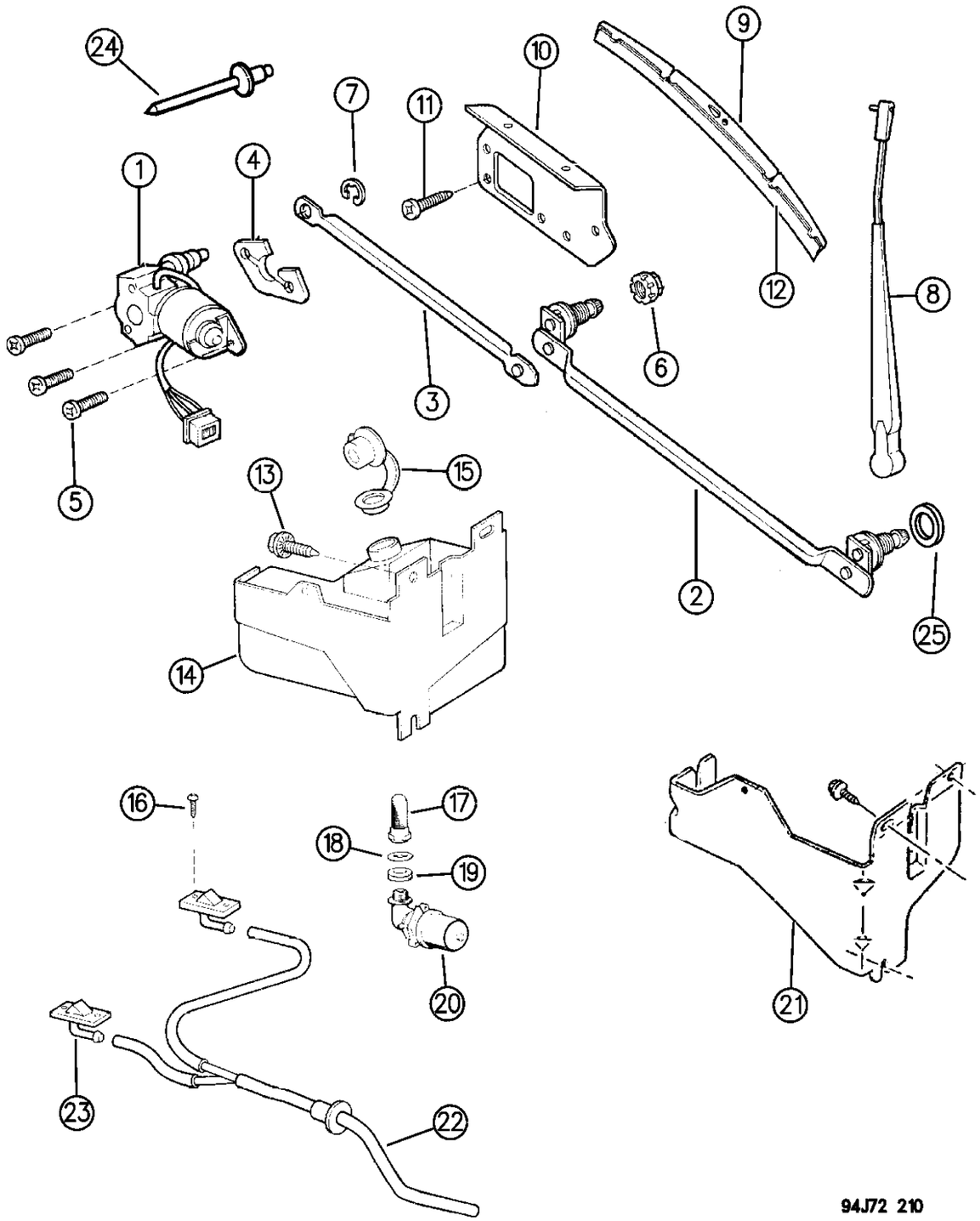

ITEM	PART NUMBER	QTY	BODY	MODEL	DESCRIPTION
1	5603 0005	1			MOTOR, Wiper
2	5600 3535	1			PIVOT, Wiper
3	5600 3536	1			ARM, Drive
4	5600 6324	1			GASKET, Motor
5	J400 5765	3			SCREW
6	3600 0269	2			NUT
7	1150 5398	1			RING, Retaining
8	5603 0012	2			ARM, Wiper
9	5500 0299	2			BLADE, Wiper
10	5AB1 0LTB	1			PLATE
11	J400 4710	2			SCREW
12	8350 5425	2			REFILL, Blade
13	J400 4801	3			SCREW
14		1			RESERVOIR, Single
	5515 4744				w/Single Pump
	5515 4742				w/Dual Pumps
15	5600 2054	1			CAP, Reservoir
16	J400 4801	4			SCREW
17	5600 0593	1			NUT, Filter
18	5600 0594	1			WASHER
19	5600 0592	1			SEAL
20	5252 217	1			PUMP, Washer
21	5502 6288	1			BRACKET, Reservoir
22					HOSE, Front Washer
	3600 1628	1			
	5525 5657	1			RHD
23	5600 1759	2			NOZZLE, Washer
24	J400 3630	2			RIVET, Motor
25	4773 280	1			GASKET, Pivot Body

MODEL CODES:

72=2 DR Wagon
74=4 DR Wagon
77=Open Body 93" Whlbase
78=Open Body 103" Whlbase - Export
T=2WD
J,N=4WD
U=4WD (RHD)

BODY STYLES:

YJ=Wrangler (4X4) "S"
Weangler (4X4) SE
Wrangler (4X4) Sahara
Wrangler (4X4) Renegade
XJ=Cherokee SE
Cherokee Sport
Cherokee Country
ZJ=Grand Cherokee SE
Grand Cherokee Laredo
Grand Cherolee Limited
ZG=Grand Cherokee European
Y1=Wrangler
X1=Cherokee
Z1=Grand Cherokee
KDX=Vehicles

AR = Use as Required - = Non Illustrated Part P.A.R. = Paint as Required

« RETURN TO GROUP INDEX

WINDSHIELD WIPER AND WASHER CHEROKEE XJ
Figure 23D-220

23D-220C

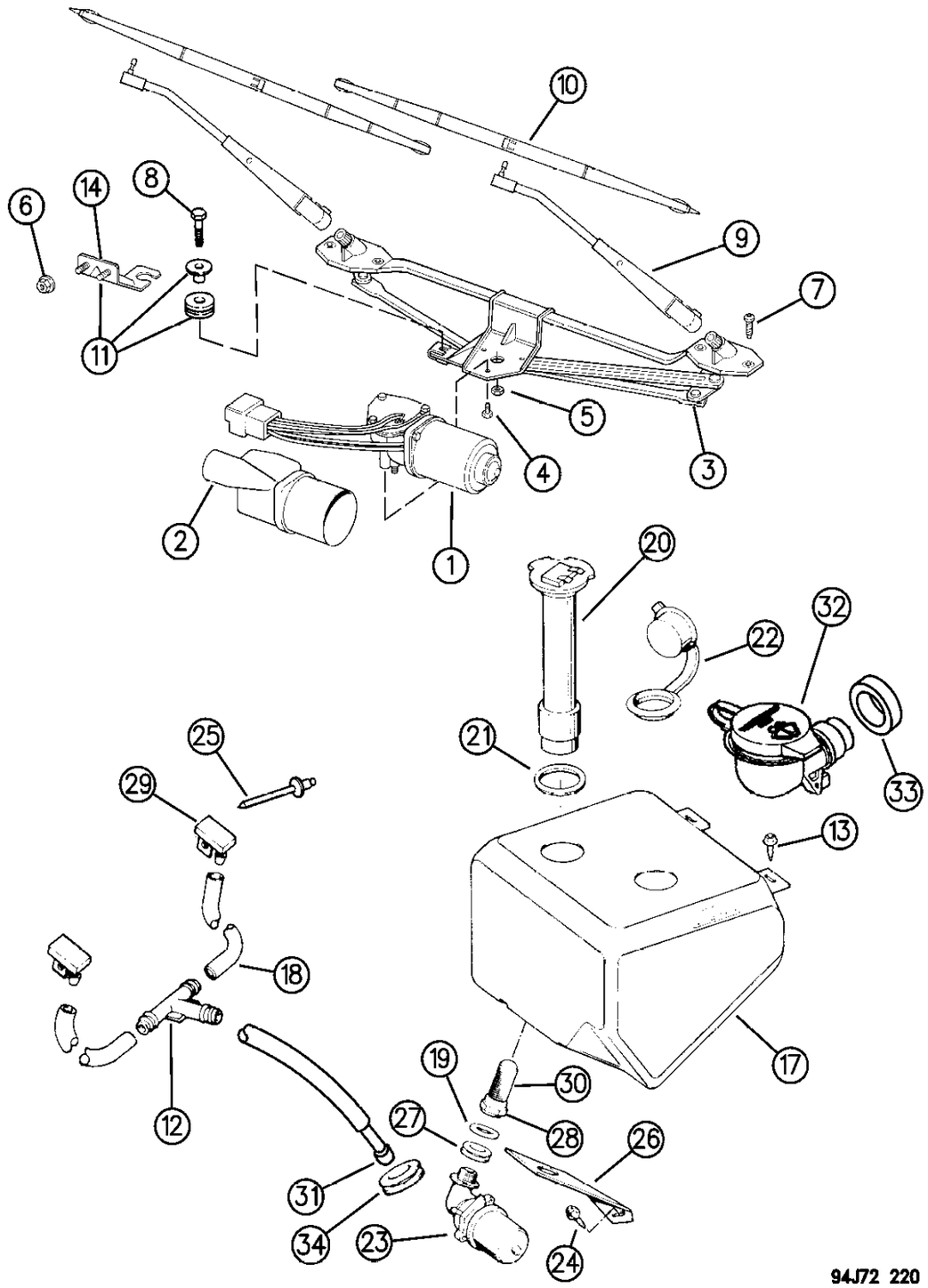

ITEM	PART NUMBER	QTY	BODY	MODEL	DESCRIPTION
1	5515 4611	1			MOTOR, Wiper
2	5600 0901	1			COVER, Motor
3		1			MOTOR ASSY, w/Pivot Arm ***
	5515 5297	1			
	5515 5300	1			RHD
4		3			BOLT, (Not Serviced)
5	3420 1866	1			NUT
6	3420 1358	2			NUT
7	3420 1496	4			SCREW, (M7.25x3.18x25.00)
8	3420 1686	1			BOLT
9					ARM, Wiper
	5600 1132	2			pin type ***
	5515 5649	2			shepherd hook type ***
	5515 4596	2			RHD
10	8350 5422	2			BLADE, w/Refill pin type
	5515 5650	2			shepherd hook type ***
11	5515 4526	1			BRACKET, w/Grommet
12	J321 0891	1			TEE, Connector
13					SCREW, Reservoir
	3420 2358	2			
	6033 567	2			RHD
14					BRACKET, Motor Mounting
	5500 3036	1			
	5515 4763	1			RHD
17					RESERVOIR, Washer
					1994 ***
					w/o Rear Washer
	5515 4605	1			Gas Engine
	5515 4753	1			Gas Engine, RHD
	5515 4753	1			Diesel Engine
					w/Rear Washer and Sensor Hole
	5515 4602	1			Gas Engine
	5515 4755	1			Gas Engine, RHD
	5515 4755	1			Diesel Engine
					1995-96 ***
					w/o Rear Washer
	5515 4605	1			Gas Engine
	4778 345	1			Gas Engine, RHD
	4778 345	1			Diesel Engine
					w/Rear Washer and Sensor Hole
		1			Gas Engine
	5515 4602				1995

MODEL CODES:

72=2 DR Wagon
74=4 DR Wagon
77=Open Body 93" Whlbase
78=Open Body 103" Whlbase - Export
T=2WD
J,N=4WD
U=4WD (RHD)

BODY STYLES:

YJ=Wrangler (4X4) "S"
Weangler (4X4) SE
Wrangler (4X4) Sahara
Wrangler (4X4) Renegade
XJ=Cherokee SE
Cherokee Sport
Cherokee Country
ZJ=Grand Cherokee SE
Grand Cherokee Laredo
Grand Cherolee Limited
ZG=Grand Cherokee European
Y1=Wrangler
X1=Cherokee
Z1=Grand Cherokee
KDX=Vehicles

AR = Use as Required - = Non Illustrated Part P.A.R. = Paint as Required

WINDSHIELD WIPER AND WASHER CHEROKEE XJ
Figure 23D-220

23D-220C

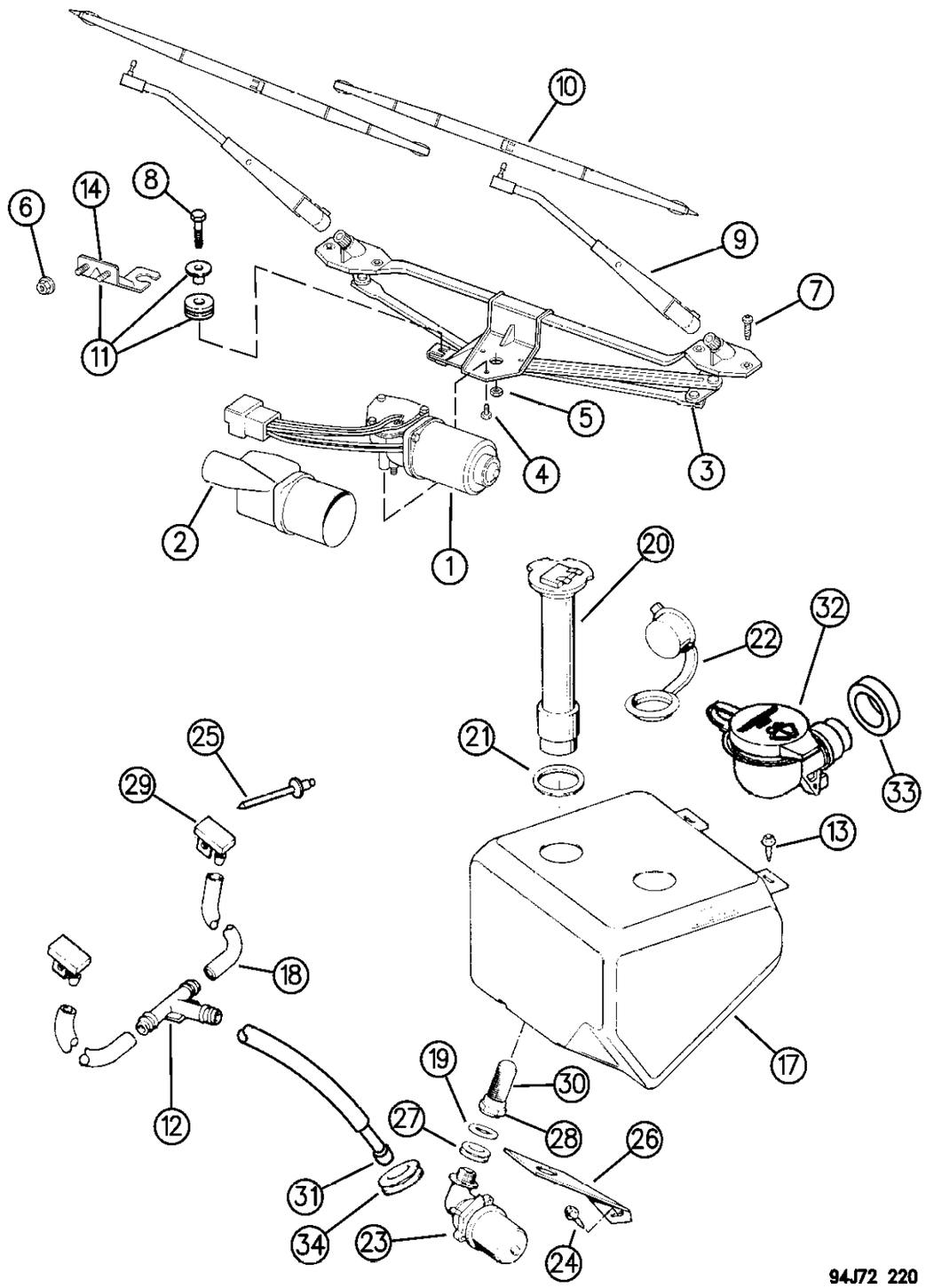

ITEM	PART NUMBER	QTY	BODY	MODEL	DESCRIPTION
	5515 5208				1996
	4778 344	1			Gas Engine, RHD
	4778 344	1			Diesel Engine
18	4439 003	AR			HOSE
19	5600 0594	1			WASHER
20					SENSOR, Fluid Level
					1996
	4798 630	1			Gas Engine (L.H.D.)
					1994-95
	5600 0698	1			Gas Engine
	5600 0873	1			Gas Engine, RHD
	5600 0873	1			Diesel Engine
					1996
	5515 4979	1			Gas Engine, RHD
	5515 4979	1			Diesel Engine
					1995 1/2 - 96
	4778 349	1			Side Mounted Sensor
21		1			GASKET, Sensor
	5600 0595		XJ		1994-95
	4798 779		XJ		1996
22					CAP, Reservoir
		1			Gas Engine
	5600 5210				1994-95
	4798 974				1996
	5600 0699				Gas Engine, RHD
	5600 0699				Diesel Engine
23	5515 4613				PUMP, Washer
	3600 1132				with rear wiper/washer ***
24	J941 7855	3			SCREW
25	J400 4262	2			RIVET
26	5600 0870	1			BRACKET, Reservoir Mounting
27	5600 0592	1			SEAL, Filter Nut
28	5600 0593	1			NUT, Filter
29	5600 1601	2			NOZZLE, Washer
30	3431 975	1			FILTER, Washer
31	4334 799	1			CONNECTOR, Hose, (3/16)
32	5515 4812	1			FILLER NECK, w/Cap, RHD ***
33	4778 350	1			GROMMET, Filler Neck, RHD
34	4778 346	1			GROMMET, Reservoir, RHD

MODEL CODES:

72=2 DR Wagon
74=4 DR Wagon
77=Open Body 93" Whlbase
78=Open Body 103" Whlbase - Export
T=2WD
J,N=4WD
U=4WD (RHD)

BODY STYLES:

YJ=Wrangler (4X4) "S"
Weangler (4X4) SE
Wrangler (4X4) Sahara
Wrangler (4X4) Renegade
XJ=Cherokee SE
Cherokee Sport
Cherokee Country
ZJ=Grand Cherokee SE
Grand Cherokee Laredo
Grand Cherolee Limited
ZG=Grand Cherokee European
Y1=Wrangler
X1=Cherokee
Z1=Grand Cherokee
KDX=Vehicles

AR = Use as Required - = Non Illustrated Part P.A.R. = Paint as Required

WINDSHIELD WIPER AND WASHER GRAND CHEROKEE ZJ
Figure 23D-230

23D-230B

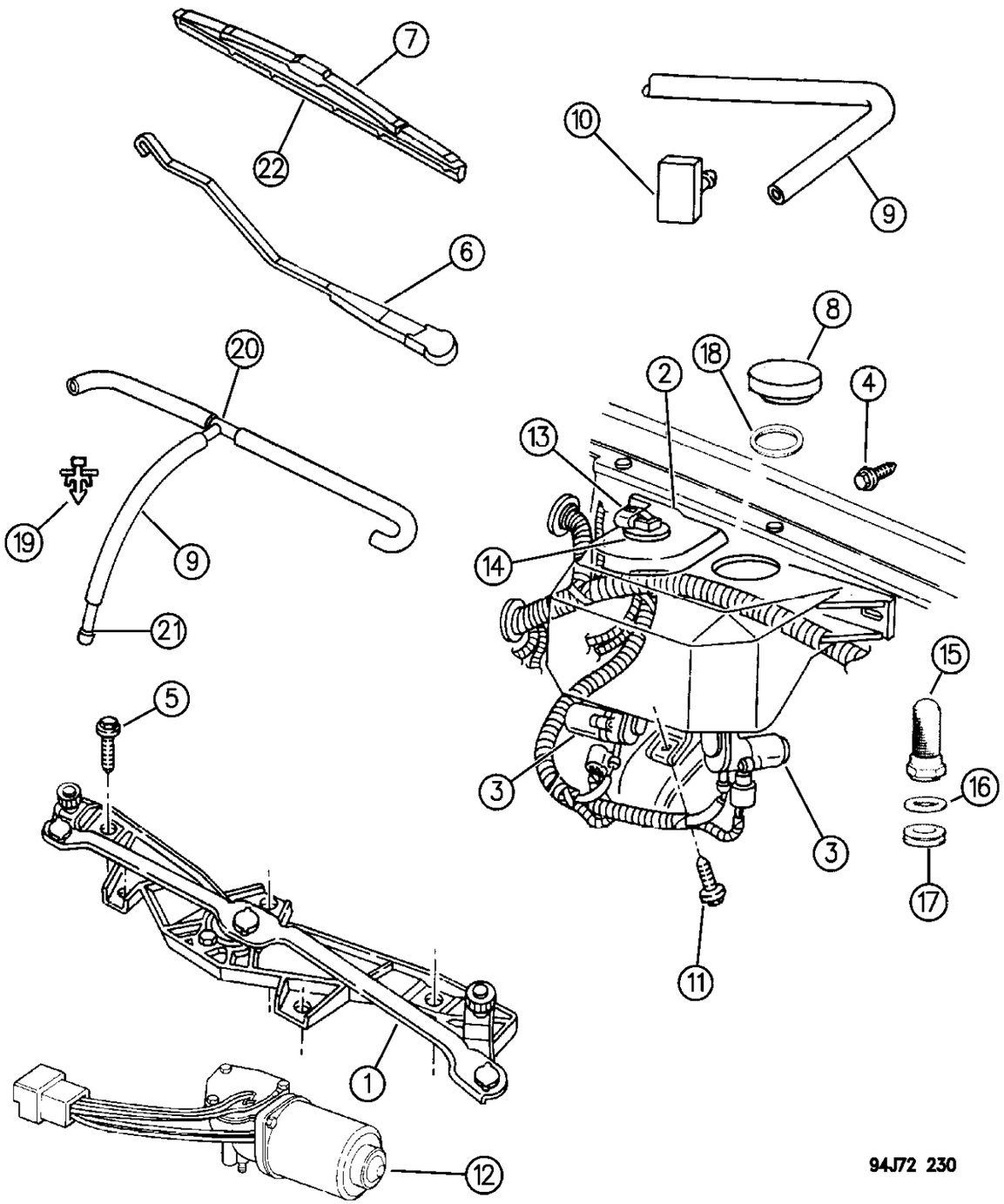

ITEM	PART NUMBER	QTY	BODY	MODEL	DESCRIPTION
1					LINKAGE, w/Pivot ***
	5515 4824	1			1994
	5515 5009	1			1995, Up To, 2-1-95
	5515 5209	1			1995, After, 2-1-95
	5515 5209	1			1996
	5603 6812		ZG		RHD, EUROPE
2					RESERVOIR, Washer
					w/o Vehicle Monitor
	5600 5461	1			1994
	5515 4978	1			1995
	4798 972				1996
					w/Vehicle Monitor
	5600 5420	1			1994
	5515 4976	1			1995
	4798 973				1996
3	4713 733	2			PUMP PACKAGE, Washer, includes jumper and instruction sheet ***
4	6501 230	2			SCREW, Reservoir
5	3420 1686	5			BOLT, Linkage
6					ARM, Wiper
	5600 5184	2			1994
	5515 4983	2			1995-96
	5603 6800		ZG		RHD, EUROPE
7	5600 5186AB	2			BLADE, w/Refill
8		1			CAP, Reservoir
	5600 5210				1994-95
	4798 974				1996
9	5515 4690	AR			HOSE, Washer
10	5600 5414	2			NOZZLE, Washer
11		1			SCREW, (Not Serviced)
12	5600 5181	1			MOTOR, Wiper
13		1			SENSOR, Fluid
	5600 5209				1994
	5515 4979				1995-96
14					GASKET, Sensor
	5600 0595	1			1994
	4334 568	1			1995
	4798 779	1			1996 ***
15	5600 0593	2			NUT, Filter
16	5600 0594	2			WASHER, Filter
17	5600 0592	2			SEAL, Filter
18	5515 4980	1			GASKET, Reservoir Cap
19	5503 5949	2			CLIP, Hose

MODEL CODES:

72=2 DR Wagon
74=4 DR Wagon
77=Open Body 93" Whlbase
78=Open Body 103" Whlbase - Export
T=2WD
J,N=4WD
U=4WD (RHD)

BODY STYLES:

YJ=Wrangler (4X4) "S"
Weangler (4X4) SE
Wrangler (4X4) Sahara
Wrangler (4X4) Renegade
XJ=Cherokee SE
Cherokee Sport
Cherokee Country
ZJ=Grand Cherokee SE
Grand Cherokee Laredo
Grand Cherolee Limited
ZG=Grand Cherokee European
Y1=Wrangler
X1=Cherokee
Z1=Grand Cherokee
KDX=Vehicles

AR = Use as Required - = Non Illustrated Part P.A.R. = Paint as Required

WINDSHIELD WIPER AND WASHER GRAND CHEROKEE ZJ
Figure 23D-230

23D-230B

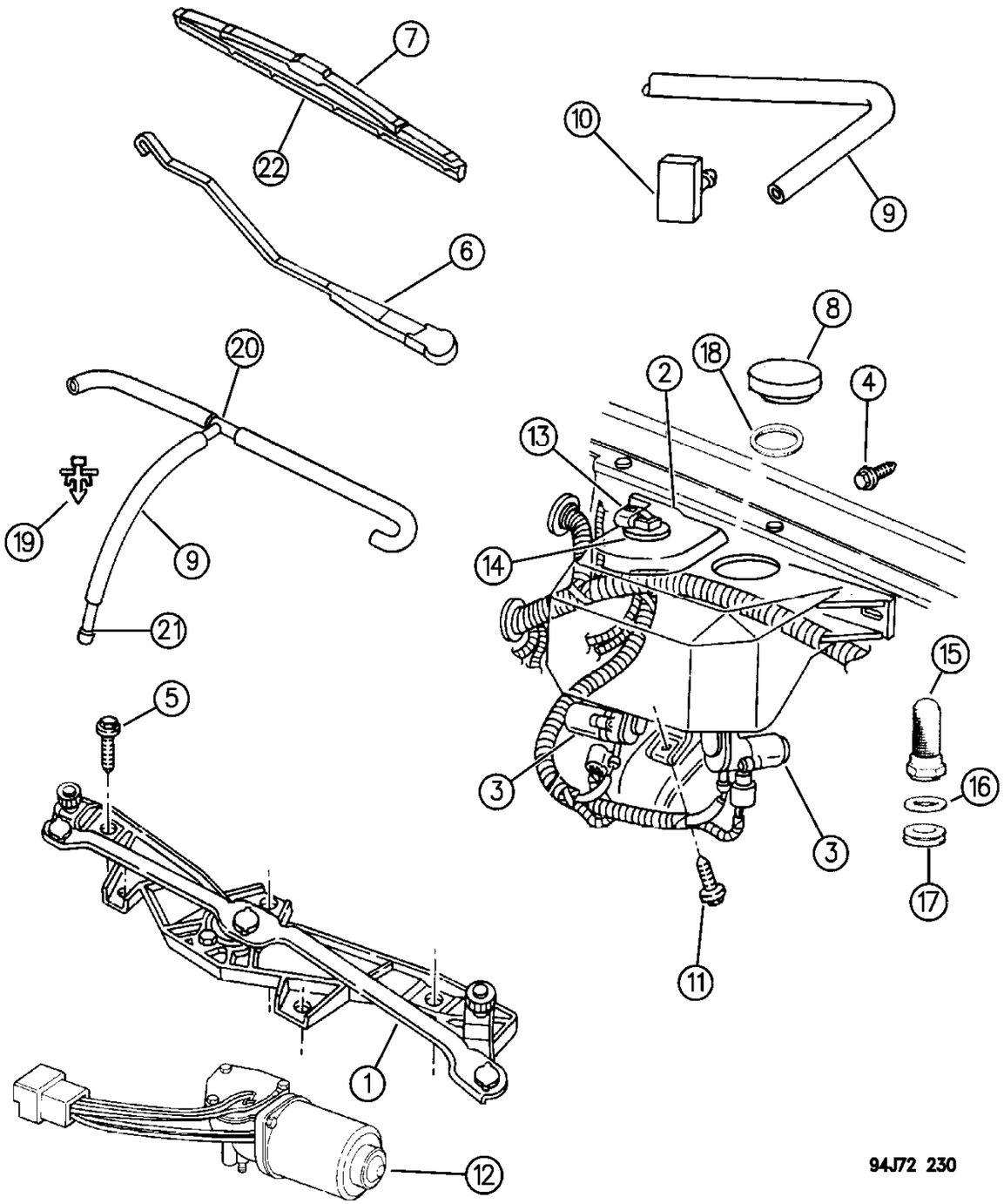

ITEM	PART NUMBER	QTY	BODY	MODEL	DESCRIPTION
20	3671 410	1			TEE, Hose
21	4334 799	1			CONNECTOR, Hose, (3/16)
22	4773 417	1			REFILL, Wiper Blade

MODEL CODES:

72=2 DR Wagon
74=4 DR Wagon
77=Open Body 93" Whlbase
78=Open Body 103" Whlbase - Export
T=2WD
J,N=4WD
U=4WD (RHD)

BODY STYLES:

YJ=Wrangler (4X4) "S"
Weangler (4X4) SE
Wrangler (4X4) Sahara
Wrangler (4X4) Renegade

XJ=Cherokee SE
Cherokee Sport
Cherokee Country

ZJ=Grand Cherokee SE
Grand Cherokee Laredo
Grand Cherolee Limited
ZG=Grand Cherokee European

Y1=Wrangler
X1=Cherokee
Z1=Grand Cherokee
KDX=Vehicles

AR = Use as Required - = Non Illustrated Part P.A.R. = Paint as Required

REAR WIPER AND WASHER WRANGLER YJ
Figure 23D-310

23D-310B

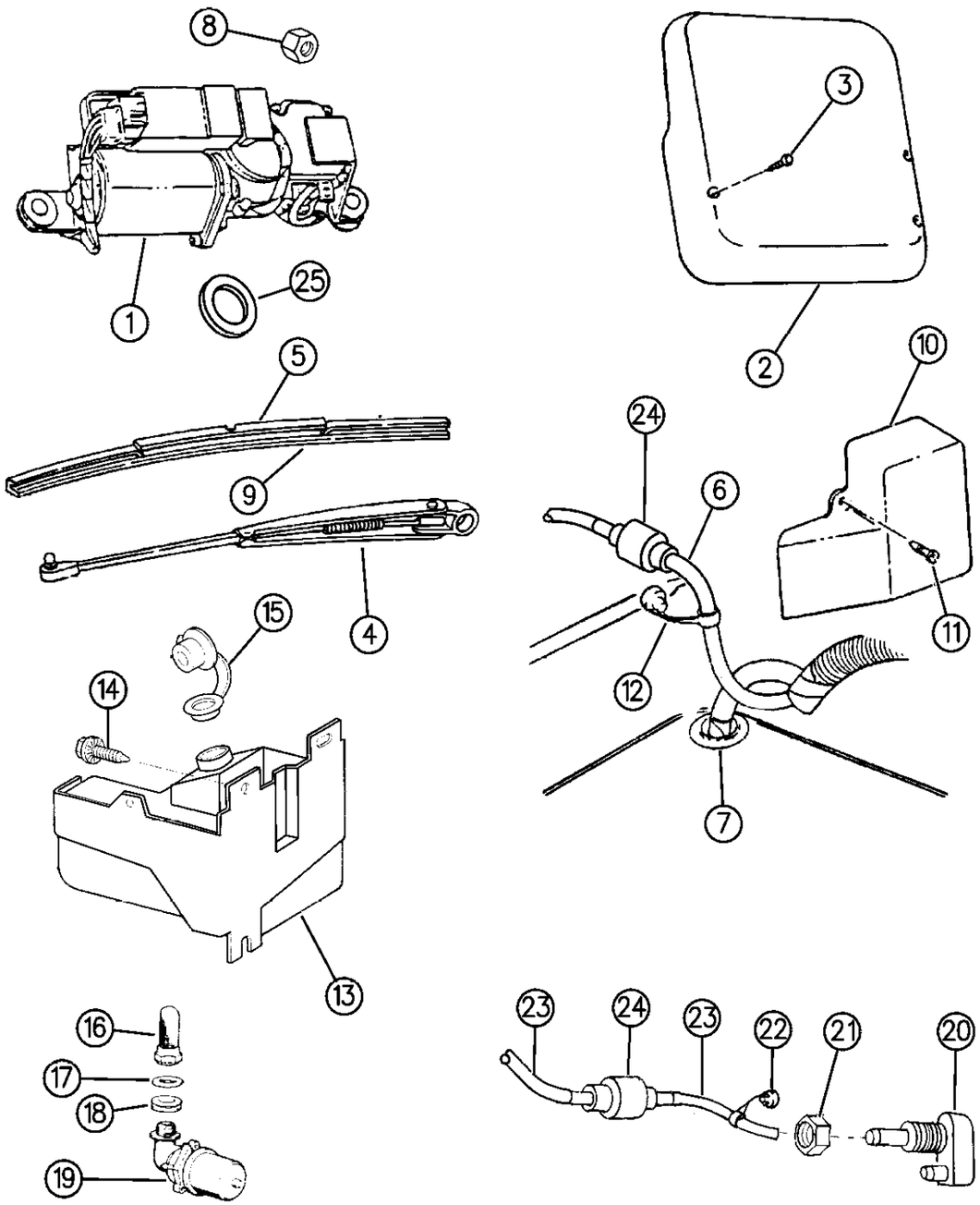

ITEM	PART NUMBER	QTY	BODY	MODEL	DESCRIPTION
1	5515 4539	1			MOTOR, Wiper
2	5515 4538	1			COVER
3		AR			SCREW, (Not Serviced)
4	5603 0012	1			ARM, Wiper
5	4389 063	1			BLADE ASSEMBLY, Wiper ***
6	4439 003	AR			HOSE
7	5600 3075	1			GROMMET
8	5600 3682	1			NUT
9	5211 078	1			REFILL, Blade
10	5502 5390	1			COVER, Switch
11	6033 969	1			SCREW
12	5600 3982	1			STRAP, Plug
13	5515 4742	1			RESERVOIR, Washer
14	J400 4801	3			SCREW
15	5600 2054	1			CAP, Reservoir
16	5600 0593	1			NUT, Filter
17	5600 0594	1			WASHER
18	5600 0592	1			SEAL
19	5252 217	1			PUMP, Washer
20	5515 4588	1			NOZZLE, Washer
21	5515 4587	1			NUT, Nozzle Mounting
22	5600 3982	1			PLUG
23	4439 003	AR			HOSE
24	5600 6162	1			VALVE, Check
25	5515 4556	1			SPACER, Motor Shaft Outer to Glass

MODEL CODES:

72=2 DR Wagon
74=4 DR Wagon
77=Open Body 93" Whlbase
78=Open Body 103" Whlbase - Export
T=2WD
J,N=4WD
U=4WD (RHD)

BODY STYLES:

YJ=Wrangler (4X4) "S"
Weangler (4X4) SE
Wrangler (4X4) Sahara
Wrangler (4X4) Renegade

XJ=Cherokee SE
Cherokee Sport
Cherokee Country

ZJ=Grand Cherokee SE
Grand Cherokee Laredo
Grand Cherolee Limited
ZG=Grand Cherokee European

Y1=Wrangler
X1=Cherokee
Z1=Grand Cherokee
KDX=Vehicles

AR = Use as Required - = Non Illustrated Part P.A.R. = Paint as Required

« RETURN TO GROUP INDEX

REAR WIPER AND WASHER CHEROKEE XJ
Figure 23D-320

23D–320

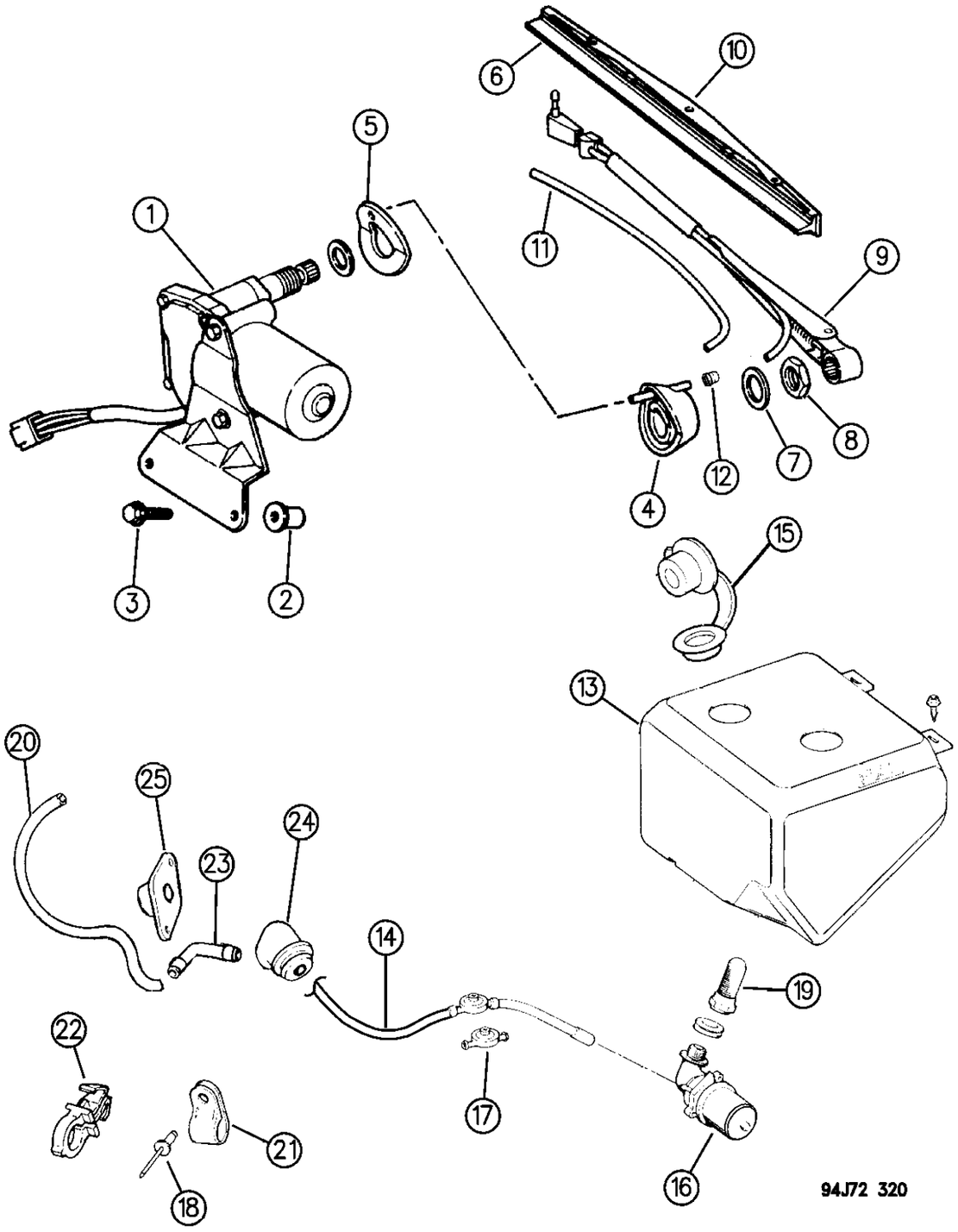

ITEM	PART NUMBER	QTY	BODY	MODEL	DESCRIPTION
1	5515 5317	1			MOTOR, Wiper
2	3420 1589	2			NUT, Well
3	3420 1686	2			SCREW
4	5500 0302	1			BEZEL, Wiper
5	5515 4612	1			GASKET
6	8350 5425	1			REFILL, Blade
7	6502 395	1			WASHER
8	6502 299	1			NUT
9	5600 0598	1			ARM, Wiper, w/Nozzle
10	5500 0299	1			BLADE, Wiper
11	3600 0423	AR			HOSE
12	3420 1767	12			CLIP, Tubular Sealed
13		1			RESERVOIR, Washer
	5515 4602				1994-95
	5515 5208				1996
14	4439 003	AR			HOSE
15		1			CAP, Reservoir
	5600 5210				1994-95
	4798 974				1996
16					PUMP, Washer
	3600 1132	1			1994-front washer pump 1995-1996 rear washer pump ***
					1995-96 ***
					w/o Rear Washer
	5515 4613	1			Gas Engine
	4778 347	1			Gas Engine, RHD
	4778 347	1			Diesel Engine
					w/Rear Washer
	5515 4613	1			Gas Engine front washer pump
	4778 347	1			Gas Engine, RHD, Front
	4778 348	1			Gas Engine, RHD, Rear
	4778 347	1			Diesel Engine, Front
	4778 348	1			Diesel Engine, Rear
17	5600 6162	1			VALVE, Check
18	3420 1197	1			RIVET
19	5600 0593	AR			NUT
20	3420 2358	2			SCREW
21	3420 1904	1			CLIP
22	J400 6550	AR			CLIP
23	3300 0808	1			CONNECTOR
24	J417 0917	1			GROMMET, Tube
25	J417 0317	1			GROMMET, Wire

MODEL CODES:

72=2 DR Wagon
74=4 DR Wagon
77=Open Body 93" Whlbase
78=Open Body 103" Whlbase - Export
T=2WD
J,N=4WD
U=4WD (RHD)

BODY STYLES:

YJ=Wrangler (4X4) "S"
Weangler (4X4) SE
Wrangler (4X4) Sahara
Wrangler (4X4) Renegade
XJ=Cherokee SE
Cherokee Sport
Cherokee Country
ZJ=Grand Cherokee SE
Grand Cherokee Laredo
Grand Cherolee Limited
ZG=Grand Cherokee European
Y1=Wrangler
X1=Cherokee
Z1=Grand Cherokee
KDX=Vehicles

AR = Use as Required - = Non Illustrated Part P.A.R. = Paint as Required

« RETURN TO GROUP INDEX

REAR WIPER AND WASHER GRAND CHEROKEE ZJ
Figure 23D-330

23D-330B

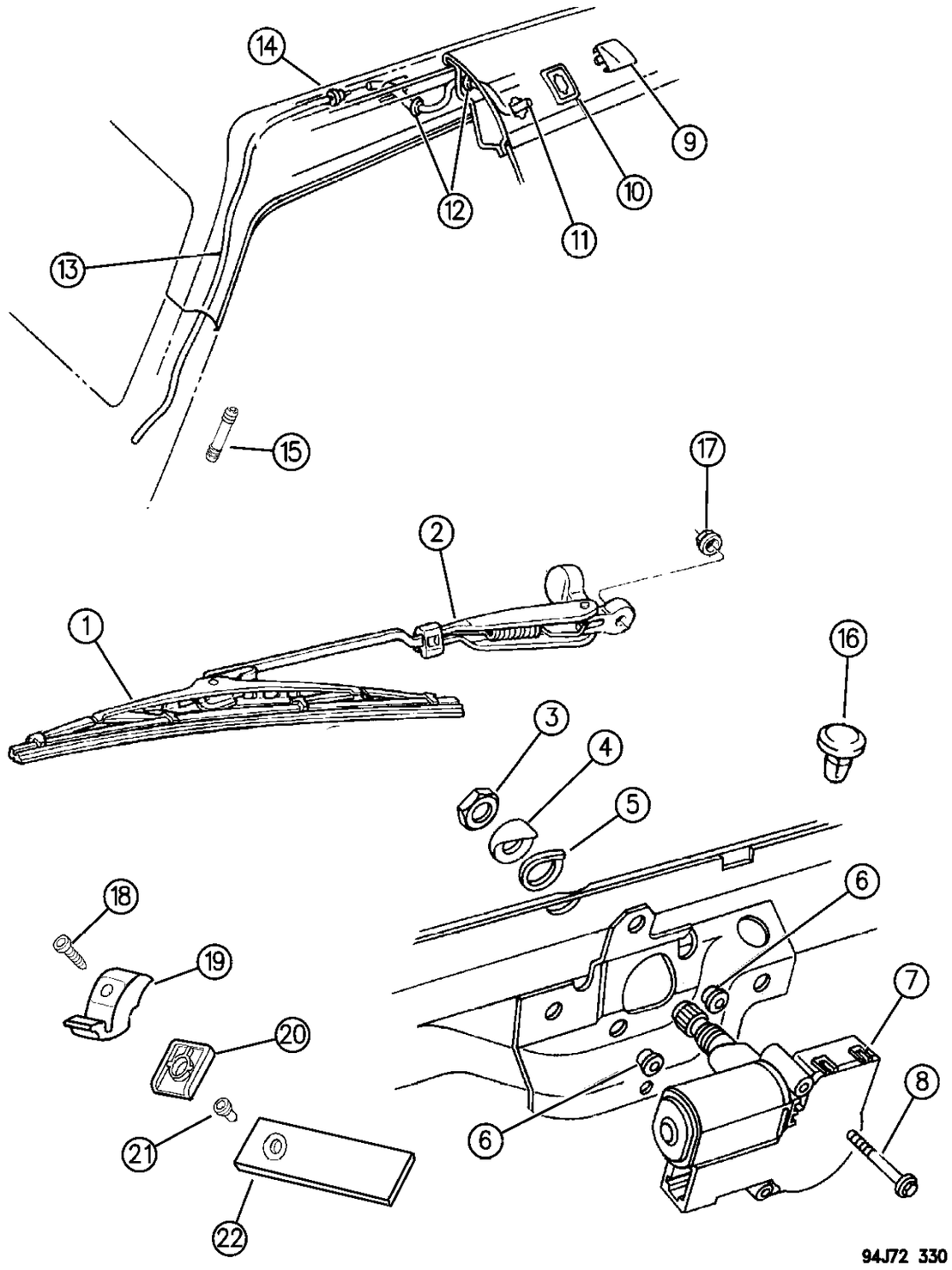

ITEM	PART NUMBER	QTY	BODY	MODEL	DESCRIPTION
1	5515 4727	1			BLADE, w/Refill
2	5515 4786	1			ARM, Wiper
	5515 4786	1			1994
	5515 4786	1			1995, w/o Flipper Window
	5515 4966	1			1995, w/Flipper Window
	5515 4966				1996 w/ or w/o Flipper Glass
3	6502 263	1			NUT
4	5600 5200	1			BEZEL, Arm Mounting
5	5600 5201	1			GASKET, Arm Mounting
6	6503 056	2			NUT, Well, (M6x1.00)
7	5515 4787	1			MOTOR, Wiper 1994-95
	5515 5040	1			1996
8	6502 727	2			SCREW
9	5515 4987				NOZZLE, Washer
10		1			SEAL, (Serviced in Item# 9)
11	5600 5793	1			TUBE, Washer
12	5515 4622	1			GROMMET
13	5515 4535	1			HOSE, Valve to Nozzle
14	5600 6162	1			VALVE, Check
15	3300 0808	2			CONNECTOR, (1/8x1/8)
16	5501 7818	2			PLUG, Wiper Shaft Hole
17	6500 165	1			NUT, Wiper Arm
18		1			SCREW, (Not Serviced)
19	5515 4957	1			RAMP, Park ***
	6503 077	1			Screw, Ramp Mounting ***
20	5515 4971	1			GASKET, Park Ramp
21	6504 363	1			NUT, Rear Wiper Motor Mounting
22		1			STRIP, Protector, (Not Serviced) ***

MODEL CODES:

72=2 DR Wagon
74=4 DR Wagon
77=Open Body 93" Whlbase
78=Open Body 103" Whlbase - Export
T=2WD
J,N=4WD
U=4WD (RHD)

BODY STYLES:

YJ=Wrangler (4X4) "S"
Weangler (4X4) SE
Wrangler (4X4) Sahara
Wrangler (4X4) Renegade
XJ=Cherokee SE
Cherokee Sport
Cherokee Country
ZJ=Grand Cherokee SE
Grand Cherokee Laredo
Grand Cherolee Limited
ZG=Grand Cherokee European
Y1=Wrangler
X1=Cherokee
Z1=Grand Cherokee
KDX=Vehicles

AR = Use as Required - = Non Illustrated Part P.A.R. = Paint as Required

« RETURN TO GROUP INDEX

SAGIPARTS

GROUP-24
AIR CONDITIONING & HEATER

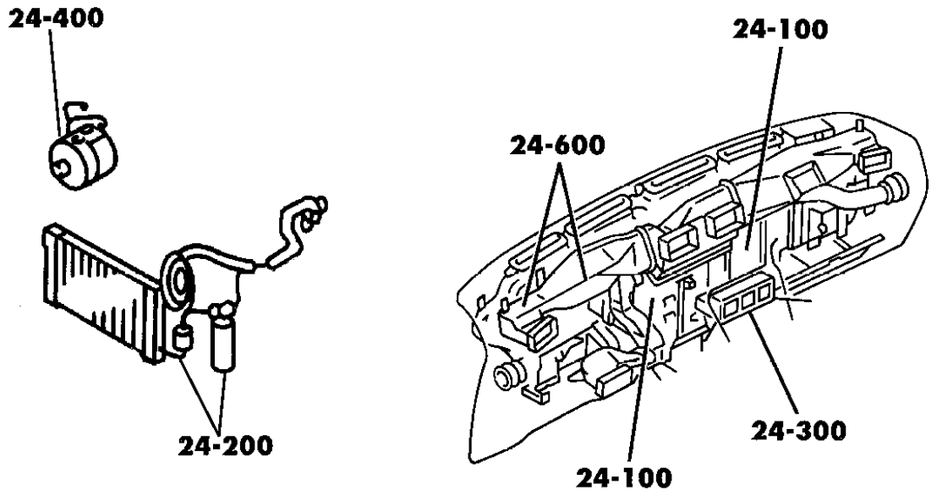

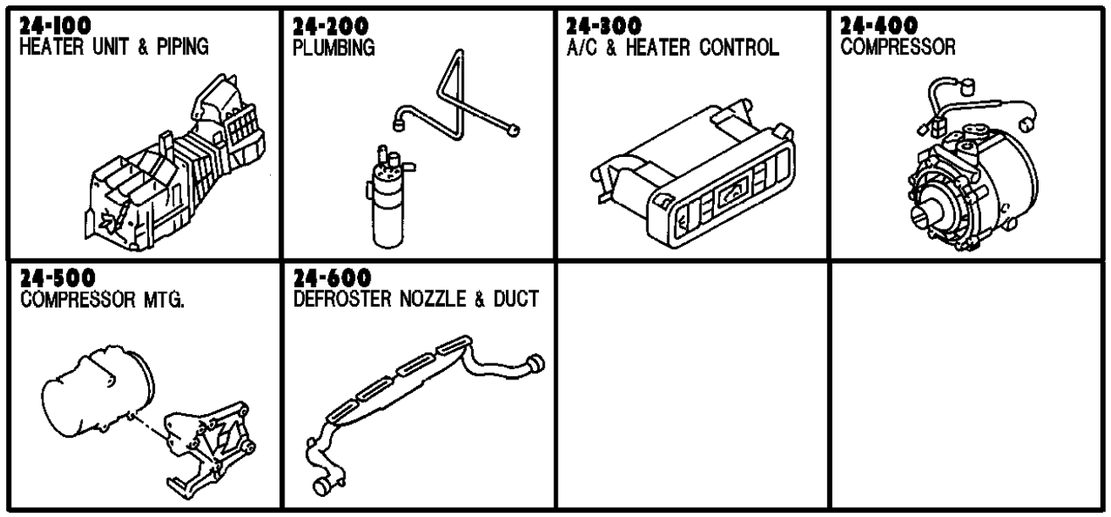

GROUP 24 - HEATER AND AIR CONDITIONING

ILLUSTRATION TITLE	GROUP-FIG. NO.
AIR CONDITIONING HEATER UNIT AND PIPING	
HEATER UNIT YJ BODY	Fig. 24-105
EVAPORATOR AND BLOWER, AIR CONDITIONING YJ BODY	Fig. 24-110
HOUSING AND CORE, HEATER XJ BODY	Fig. 24-120
BLOWER MOTOR AND HOUSING HEATER AND AIR CONDITIONING XJ BODY	Fig. 24-130
CORE, EVAPORATOR XJ BODY	Fig. 24-140
AIR CONDITIONING UNIT ZJ, ZG BODY	Fig. 24-160
AIR CONDITIONING UNIT A.T.C. ZJ, ZG BODY	Fig. 24-170
PLUMBING, A/C AND HEATER	
PLUMBING, HEATER YJ BODY	Fig. 24-205
RECEIVER DRIER AND LINES YJ BODY	Fig. 24-207
HOSES, HEATER 4.0L ENGINE XJ BODY	Fig. 24-210
LINES, HEATER AND AIR CONDITIONING VACUUM XJ BODY	Fig. 24-215
RECEIVER DRIER, CONDENSOR AND LINES 2.5L ENGINE XJ BODY 1994-95	Fig. 24-220
RECEIVER DRIER, CONDENSOR AND LINES 2.5L ENGINE XJ BODY 1996	Fig. 24-222
RECEIVER DRIER, CONDENSOR AND LINES 2.5L ENGINE XJ BODY (RHD) 1996	Fig. 24-224
RECEIVER DRIER, CONDENSOR AND LINES 4.0L ENGINE XJ BODY 1994-95	Fig. 24-225
RECEIVER DRIER, CONDENSOR AND LINES 4.0L ENGINE XJ BODY 1996	Fig. 24-227
RECEIVER DRIER, CONDENSOR AND LINES 4.0L ENGINE XJ BODY (RHD) 1996	Fig. 24-229
RECEIVER DRIER, CONDENSER AND LINES 2.1 DIESEL ENGINE XJ BODY 1994	Fig. 24-230
RECEIVER DRIER,CONDENSOR AND LINES 2.5L DIESEL ENGINE XJ BODY	Fig. 24-232
RECEIVER DRIER, CONDENSOR AND LINES 2.5L DIESEL ENGINE XJ BODY RHD	Fig. 24-234
HOSES, HEATER 2.5L GAS AND DIESEL ENGINES XJ BODY	Fig. 24-235
HOSES, HEATER 4.0L ENGINE ZJ, ZG BODY	Fig. 24-240
HOSES, HEATER 5.2L ENGINE ZJ, ZG BODY	Fig. 24-245
HOSES, HEATER 2.5L DIESEL ZJ, ZG BODY	Fig. 24-247
ACCUMULATOR, CONDENSOR AND LINES 4.0L ENGINE ZJ, ZG BODY	Fig. 24-250
ACCUMULATOR, CONDENSOR AND LINES 5.2L ENGINE ZJ, ZG BODY	Fig. 24-255
ACCUMULATOR, CONDENSOR AND LINES 2.5L DIESEL ENGINE ZG BODY	Fig. 24-257
CONTROLS, A/C AND HEATER	
CONTROLS, HEATER AND FRESH AIR YJ BODY	Fig. 24-305
CONTROLS, HEATER AND AIR CONDITIONING XJ BODY	Fig. 24-310
CONTROL, HEATER ZJ, ZG BODY	Fig. 24-320
CONTROL, AIR CONDITIONING ZJ, ZG BODY	Fig. 24-330
COMPRESSOR	
COMPRESSOR, AIR CONDITIONING YJ BODY	Fig. 24-405
COMPRESSOR, AIR CONDITIONING EXCEPT 2.5L DIESEL ENGINE XJ BODY	Fig. 24-410
COMPRESSOR, AIR CONDITIONING 2.5L DIESEL ENGINE XJ BODY	Fig. 24-415
COMPRESSOR, AIR CONDITIONING ZJ, ZG BODY	Fig. 24-420

GROUP 24 - HEATER AND AIR CONDITIONING

ILLUSTRATION TITLE	GROUP-FIG. NO.
COMPRESSOR (Continued)	
COMPRESSOR, AIR CONDITIONING ZJ, ZG BODY	Fig. 24-420
COMPRESSOR, AIR CONDITIONING 2.5L DIESEL ENGINE ZG BODY	Fig. 24-425
MOUNTING, COMPRESSOR	
COMPRESSOR MOUNTING YJ,XJ BODY	Fig. 24-510
COMPRESSOR MOUNTING ZJ, ZG BODY	Fig. 24-520
AIR DISTRIBUTION DUCTS	
AIR DISTRIBUTION DUCTS, FRESH AIR YJ BODY	Fig. 24-605
AIR DUCT AND OUTLET, FRESH AIR W/O HEATER EUROPE, MIDEAST, KDX YJ BODY	Fig. 24-610
AIR DUCTS AND OUTLETS XJ BODY	Fig. 24-620
AIR DUCTS AND OUTLETS ZJ, ZG BODY	Fig. 24-630

HEATER UNIT YJ BODY
Figure 24-105

24-105A

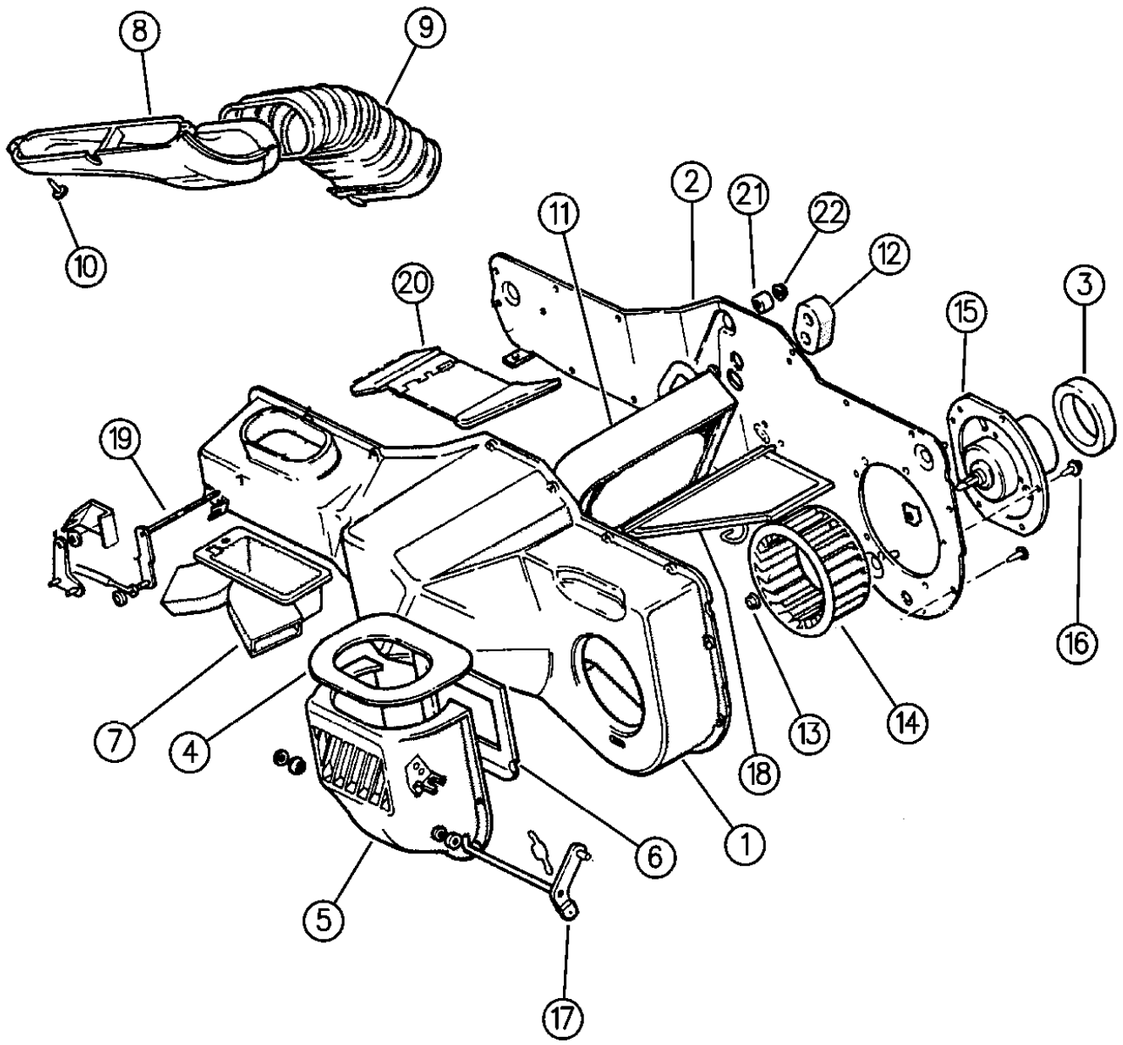

94J24 105

ITEM	PART NUMBER	QTY	BODY	MODEL	DESCRIPTION
1	5503 5791	1			CASE, Heater
2	5503 5699	1			BACKPLATE, Heater Case ***
3	5503 5566	1			SEAL
4	J546 3794	1			SEAL
5	5600 1465	1			HOUSING, Damper
-	5600 1460	1			DAMPER and LINKAGE ***
6	5600 1930	1			DAMPER, w/Seal Right Air Vent ***
7	5503 5618	1			DUCT, Floor
8	8350 5131	1			DUCT, Defroster
9	5600 1477	1			HOSE
10	3420 1688	2			SCREW
11	5600 1459	1			CORE, Heater
12	5600 4535	1			SEAL, Heater Core Tubes
13	J420 0306	1			NUT
14	5503 5644	1			WHEEL, Blower
15	5503 5565	1			MOTOR, Blower
16	9421 073	5			SCREW
17		1			CRANK, w/Pin, Serviced in #5
18	5600 1460	1			DOOR, Blend Air
19	5503 5793	1			LINK, w/Shaft, Floor Defroster
20	5600 1463	1			DAMPER, w/Seal, Floor Defroster ***
21	5503 5991	1			SPACER
22	J027 1172	AR			NUT

MODEL CODES:

72=2 DR Wagon
74=4 DR Wagon
77=Open Body 93" Whlbase
78=Open Body 103" Whlbase - Export
T=2WD
J,N=4WD
U=4WD (RHD)

BODY STYLES:

YJ=Wrangler (4X4) "S"
Weangler (4X4) SE
Wrangler (4X4) Sahara
Wrangler (4X4) Renegade
XJ=Cherokee SE
Cherokee Sport
Cherokee Country
ZJ=Grand Cherokee SE
Grand Cherokee Laredo
Grand Cherolee Limited
ZG=Grand Cherokee European
Y1=Wrangler
X1=Cherokee
Z1=Grand Cherokee
KDX=Vehicles

AR = Use as Required - = Non Illustrated Part P.A.R. = Paint as Required

« RETURN TO GROUP INDEX

EVAPORATOR AND BLOWER, AIR CONDITIONING YJ BODY
Figure 24-110

24-110

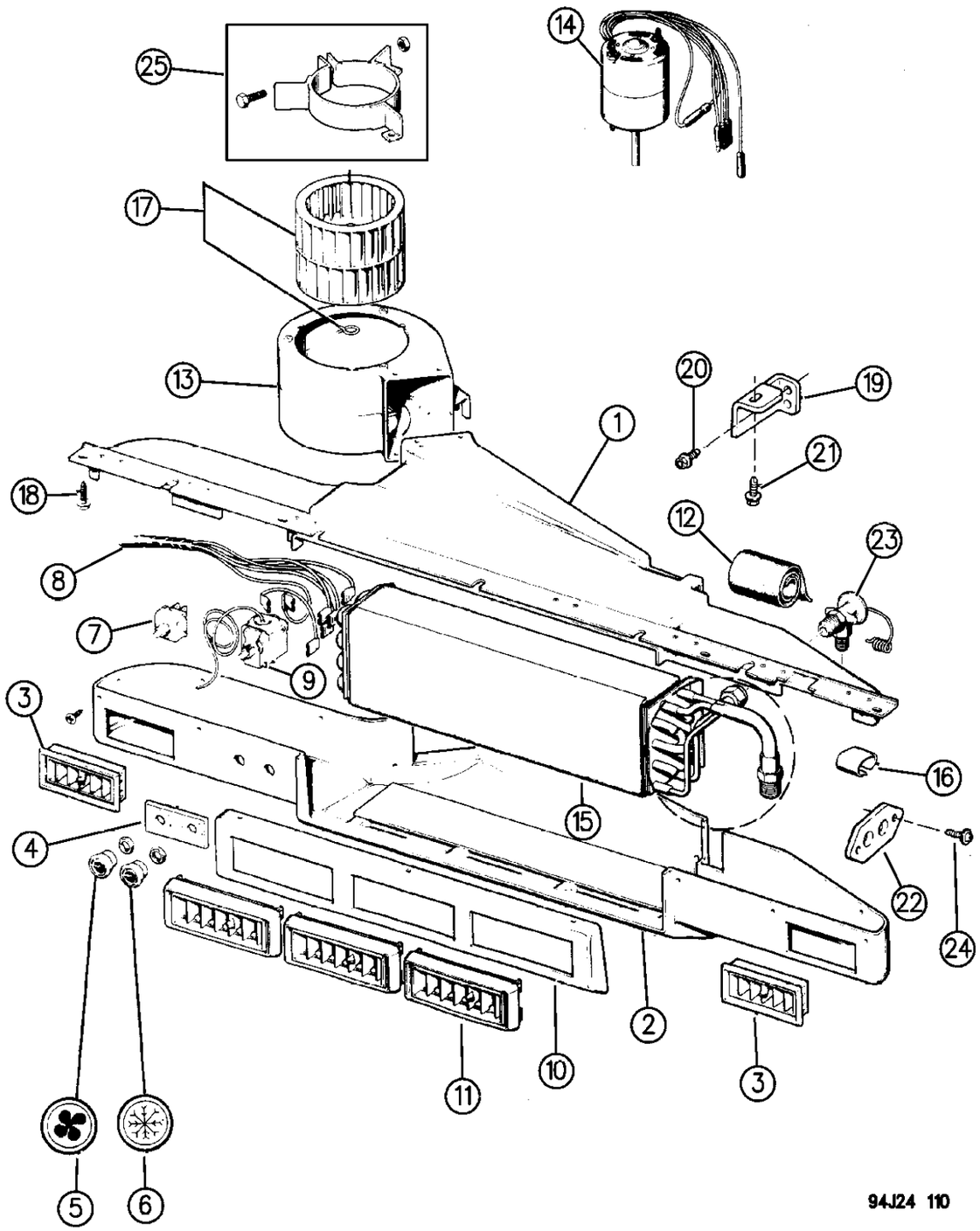

ITEM	PART NUMBER	QTY	BODY	MODEL	DESCRIPTION
1	4720 701	1			HOUSING, Upper
	5503 6332	1			LABEL, A/C Refrigerant Charge
2	4723 147	1			HOUSING, Lower
3					OUTLET, Air
	J812 8135	2			Silver/Black
	4723 148	1			Black
4					PLATE
	J812 8133	1			Silver/Black
	4638 165	1			Black
5	J813 3710	1			KNOB, Blower Switch
6	J813 3711	1			KNOB, Temperature Control
7	J812 9018	1			SWITCH, Air Conditioning Blower
8	J813 2666	1			HARNESS
9					THERMOSTAT
	4740 421	1			1994
	4796 899	1			1995
10	5600 4733	1			PANEL, Outlet Mounting
11					OUTLET, Air
	J812 8134	3			Silver/Black
	4723 149	1			Black
12	J369 3126	1			TAPE, Insulation
13	J812 8128	1			HOUSING, Blower/Evaporator
14	4741 584	1			MOTOR, Blower
	5503 5566	1			SEAL, Blower Motor to Dash
15		1			CORE, Evaporator
	8230 0754				1994
	5600 4686	1			1995
	5503 6753	1			RHD
16	J812 1901	1			CLAMP, Expansion Valve Bulb
17	J812 6991	1			WHEEL, Blower
18	J812 0054	4			SCREW
19					BRACKET, Support
	5503 6274	1			Except RHD
	5202 8396	1			RHD
20	J400 4077	2			SCREW
21	J400 1701	1			SCREW
22	J318 5484	1			GROMMET
	3696 802	1			RHD
23	5503 6406	1			VALVE, Expansion, R134A System
24	J400 4642	2			SCREW
25	J812 8139	1			BRACKET, Motor Mounting

MODEL CODES:

72=2 DR Wagon
74=4 DR Wagon
77=Open Body 93" Whlbase
78=Open Body 103" Whlbase - Export
T=2WD
J,N=4WD
U=4WD (RHD)

BODY STYLES:

YJ=Wrangler (4X4) "S"
Weangler (4X4) SE
Wrangler (4X4) Sahara
Wrangler (4X4) Renegade

XJ=Cherokee SE
Cherokee Sport
Cherokee Country

ZJ=Grand Cherokee SE
Grand Cherokee Laredo
Grand Cherolee Limited
ZG=Grand Cherokee European

Y1=Wrangler
X1=Cherokee
Z1=Grand Cherokee
KDX=Vehicles

AR = Use as Required - = Non Illustrated Part P.A.R. = Paint as Required

« RETURN TO GROUP INDEX

HOUSING AND CORE, HEATER XJ BODY
Figure 24-120

24-120

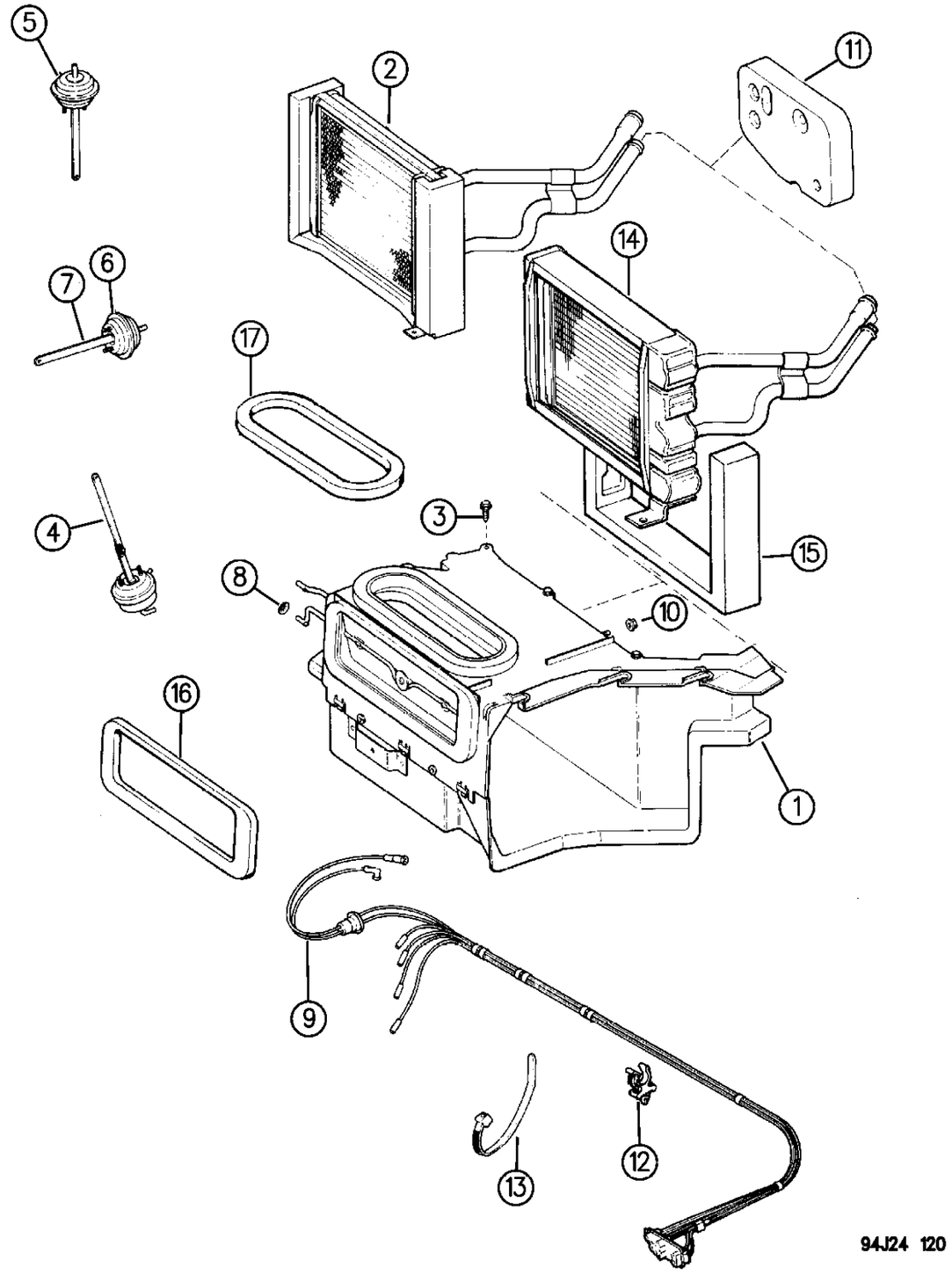

ITEM	PART NUMBER	QTY	BODY	MODEL	DESCRIPTION
1					HOUSING ASSEMBLY ***
	8350 0957	1			w/o Air
	8350 0959	1			w/Air
	4773 093	1			RHD
2	4713 125	1			CORE, Heater
	4644 138	1			RHD
	5600 0145AB	1			SEAL, Core
	4644 137	1			RHD
3	6503 415	3			SCREW
4	4644 597	1			MOTOR, Heater Vacuum, Defroster
5	5600 0044	1			MOTOR, Heater Vacuum, Floor
6	5600 0198	1			MOTOR, Heater Vacuum, Inst. Panel Outlet
7	3420 1001	AR			NUT
8	J400 0369	AR			NUT, Push
9					HOSE, Vacuum
	5600 4341	1			w/o Air Cond.
	5600 4340	1			w/Air Cond.
	5600 1771	1			w/Air Cond. CHINA
	J400 4302	1			CLAMP, Hose, Spring
10	3420 1358	2			NUT
11					SEAL, Heater Core Tubes to Dash
	5600 6310	1			Heater
	5600 6312	1			Air Conditioning
	5600 0539	1			To Housing
12	J417 5263	2			CLIP
13	J322 3227	1			STRAP
14					CORE, Heater, Diesel Engine
	5600 1321	1			LHD
	4644 138	1			RHD
15	5600 1322	1			SEAL, Heater Core, w/Diesel Engine
16	5600 0533	1			SEAL
17	5600 0513	1			SEAL

MODEL CODES:

72=2 DR Wagon
74=4 DR Wagon
77=Open Body 93" Whlbase
78=Open Body 103" Whlbase - Export
T=2WD
J,N=4WD
U=4WD (RHD)

BODY STYLES:

YJ=Wrangler (4X4) "S"
Weangler (4X4) SE
Wrangler (4X4) Sahara
Wrangler (4X4) Renegade
XJ=Cherokee SE
Cherokee Sport
Cherokee Country
ZJ=Grand Cherokee SE
Grand Cherokee Laredo
Grand Cherolee Limited
ZG=Grand Cherokee European
Y1=Wrangler
X1=Cherokee
Z1=Grand Cherokee
KDX=Vehicles

AR = Use as Required - = Non Illustrated Part P.A.R. = Paint as Required

« RETURN TO GROUP INDEX

BLOWER MOTOR AND HOUSING HEATER AND AIR CONDITIONING XJ BODY
Figure 24-130

24-130A

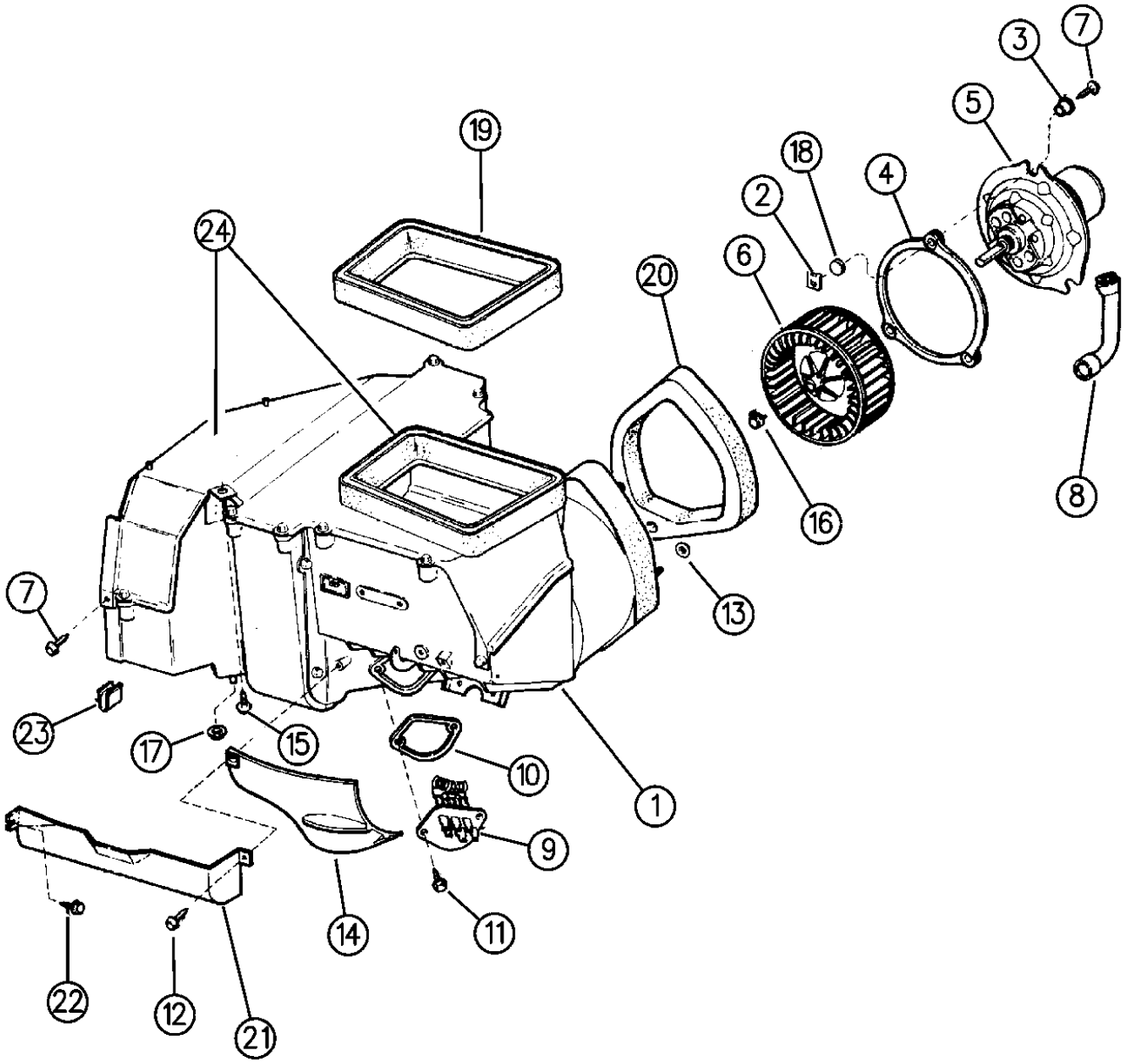

94J24 130

ITEM	PART NUMBER	QTY	BODY	MODEL	DESCRIPTION
1	5503 6532	1			HOUSING, Blower and Evaporator
					HOUSING, Air Outlet
	8350 0959	1			w/56000040 Cover
	8350 0960	1			w/56006606 Cover
	5600 6606	1			COVER, w/Seals
	4797 795	1			HOUSING ASSEMBLY, A/C and Heater Recirculating RHD ***
	4797 794	1			COVER, w/Seals, RHD
	J400 5843	1			U-NUT, Housing Mounting
					LABEL, Refrigerant Charge
	5503 6332	1			Except Severe Use
	5503 6889	1			Severe Use
2	3420 1363	3			NUT, U-type
					INSULATION, Severe Use, RHD
	5503 7155	1			Top
	5503 7156	1			Side
3	5600 0176	3			SPACER
4	5503 6534	1			GASKET
5		1			MOTOR, Blower
	5503 6328				LHD
	4638 058	1			RHD, w/Seal
	3503 036	1			SEAL, Motor to Scroll Cover, RHD
6	5600 0174	1			WHEEL, Blower
	3503 859	1			RHD
7	J812 4425	5			SCREW
8	5600 0178	1			TUBE, Cooling
9	5503 6000	1			RESISTOR
10	5600 0682	1			SEAL
11	6503 415	2			SCREW
12	3420 1365	1			SCREW, EUROPE
13	3420 1358	3			NUT
14	5600 0622	1			COVER, Resistor
	5503 5643	1			RHD
15	3420 2344	1			SCREW
16	J318 0725	1			CLAMP
17	J400 6866	1			NUT, Push
18	5600 1195	3			SEAL
19	5503 6535	1			SEAL, Evap. and Blower Housing to Plenum
	5600 1062	1			RETAINER, Seal
20	5503 6536	1			SEAL, Housing to Dash
21					COVER, Blend Air Cable
	5600 2634	1			Except EUROPE
	5503 5950	1			EUROPE

MODEL CODES:

72=2 DR Wagon
74=4 DR Wagon
77=Open Body 93" Whlbase
78=Open Body 103" Whlbase - Export
T=2WD
J,N=4WD
U=4WD (RHD)

BODY STYLES:

YJ=Wrangler (4X4) "S"
Weangler (4X4) SE
Wrangler (4X4) Sahara
Wrangler (4X4) Renegade
XJ=Cherokee SE
Cherokee Sport
Cherokee Country
ZJ=Grand Cherokee SE
Grand Cherokee Laredo
Grand Cherolee Limited
ZG=Grand Cherokee European
Y1=Wrangler
X1=Cherokee
Z1=Grand Cherokee
KDX=Vehicles

AR = Use as Required - = Non Illustrated Part P.A.R. = Paint as Required

BLOWER MOTOR AND HOUSING HEATER AND AIR CONDITIONING XJ BODY
Figure 24-130

24-130A

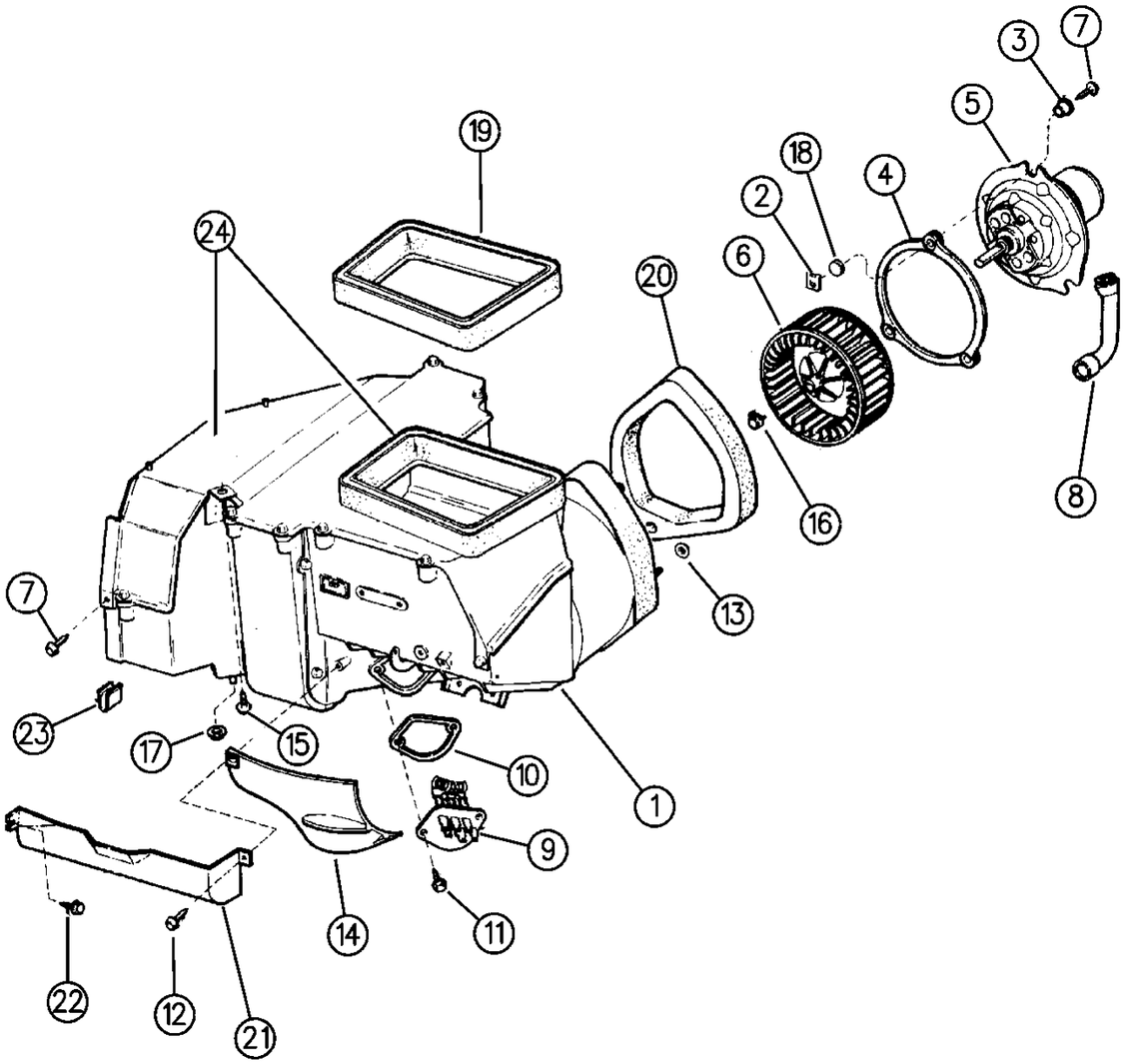

94J24 130

ITEM	PART NUMBER	QTY	BODY	MODEL	DESCRIPTION
22	J941 7855	1			SCREW, EUROPE
23	6026 450	1			CLIP
24					COVER, Evaporator Housing
	5600 0220	1			LHD
	4856 764	1			RHD
	4644 119	1			DOOR, Floor Heat
	5600 1337	1			DOOR, Recirculating
	5600 1339	1			SHAFT, Door

MODEL CODES:

72=2 DR Wagon
74=4 DR Wagon
77=Open Body 93" Whlbase
78=Open Body 103" Whlbase - Export
T=2WD
J,N=4WD
U=4WD (RHD)

BODY STYLES:

YJ=Wrangler (4X4) "S"
Weangler (4X4) SE
Wrangler (4X4) Sahara
Wrangler (4X4) Renegade
XJ=Cherokee SE
Cherokee Sport
Cherokee Country
ZJ=Grand Cherokee SE
Grand Cherokee Laredo
Grand Cherolee Limited
ZG=Grand Cherokee European
Y1=Wrangler
X1=Cherokee
Z1=Grand Cherokee
KDX=Vehicles

AR = Use as Required - = Non Illustrated Part P.A.R. = Paint as Required

CORE, EVAPORATOR XJ BODY
Figure 24-140

24-140

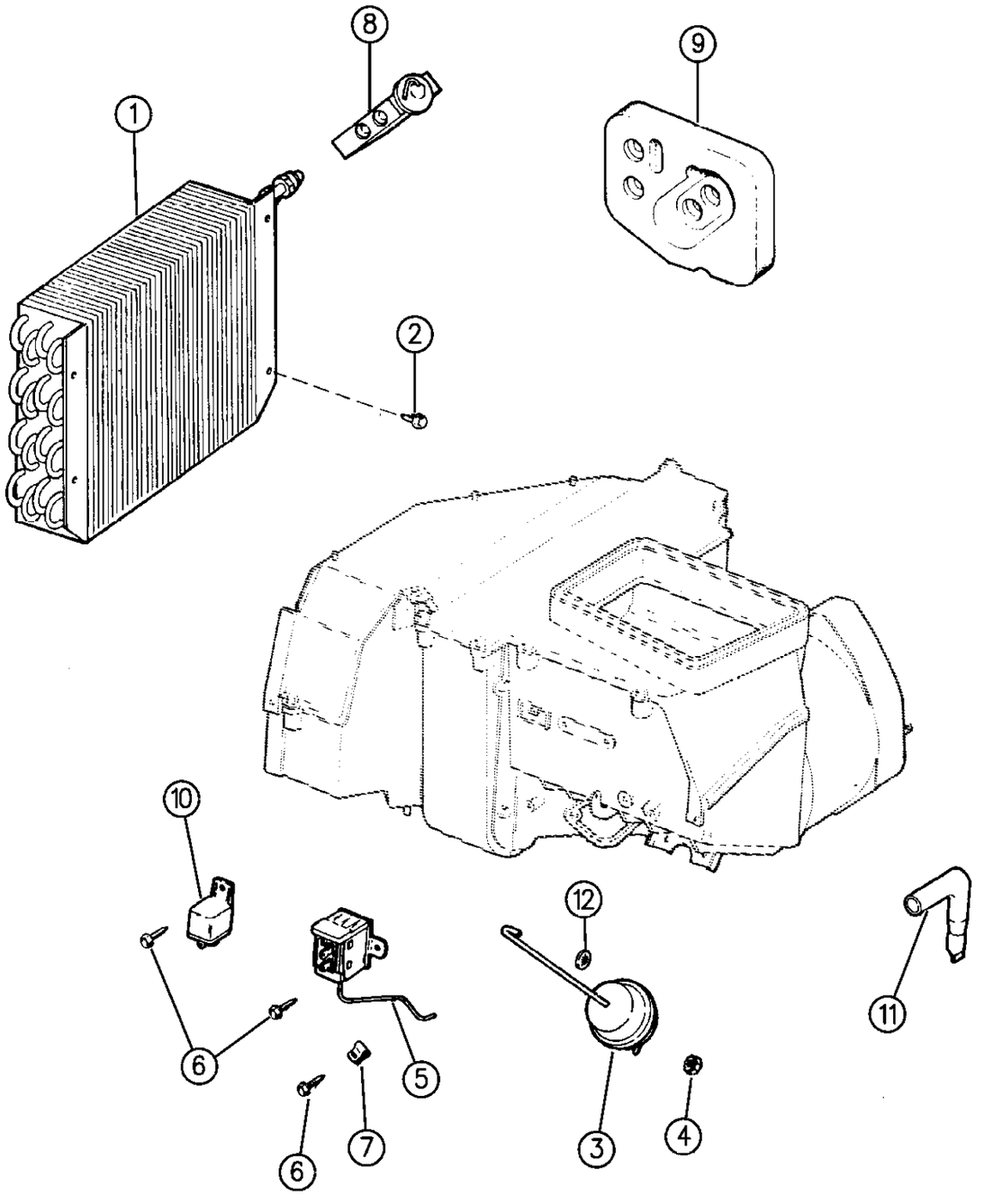

ITEM	PART NUMBER	QTY	BODY	MODEL	DESCRIPTION
1	4773 117	1			CORE, Evaporator
	4773 118	1			RHD, 1994-95
	5503 6661	1			w/Valve RHD, 1996
2	1150 2843	4			SCREW
3	5600 0208	1			MOTOR, Evaporator Vacuum
4	3420 1001	2			NUT
5					CONTROL, Thermostat
					1994
	5503 5503	1	XJ,X1	LHD,RHD	2.5/4.0 Engine and Venezeula
	5503 5641	1	XJ,X1	LHD,RHD	2.5 Gas/2.1 Diesel Engine
					1995
	5503 5503	1	XJ,X1	LHD	2.5 Gas/4.0/2.5 Diesel and Venezeula
	5503 7223	1	XJ,X1	RHD	2.5 Gas/4.0/2.5 Diesel Engine
					1996
	5503 5503	1	XJ,X1	LHD	2.5/4.0 Engine
	5503 6856	1	XJ,X1	RHD	2.5/4.0 Engine and Severe Use
	5503 5641	1	XJ,X1	LHD,RHD	2.5 Gas/2.5 Diesel Engine
6	6503 415	4			SCREW
7	J317 7100	1			CLIP
8	5503 7271	1			VALVE, Expansion
9	5600 6312	1			SEAL, A/C and Heater Core Tubes to Dash
10	3300 1776	1			RELAY, Evaporator
11	5600 0724	1			TUBE, Drain
	5503 5559	1			RHD
12	J400 0369	1			NUT, Push

MODEL CODES:

72=2 DR Wagon
74=4 DR Wagon
77=Open Body 93" Whlbase
78=Open Body 103" Whlbase - Export
T=2WD
J,N=4WD
U=4WD (RHD)

BODY STYLES:

YJ=Wrangler (4X4) "S"
Weangler (4X4) SE
Wrangler (4X4) Sahara
Wrangler (4X4) Renegade
XJ=Cherokee SE
Cherokee Sport
Cherokee Country
ZJ=Grand Cherokee SE
Grand Cherokee Laredo
Grand Cherolee Limited
ZG=Grand Cherokee European
Y1=Wrangler
X1=Cherokee
Z1=Grand Cherokee
KDX=Vehicles

AR = Use as Required - = Non Illustrated Part P.A.R. = Paint as Required

« RETURN TO GROUP INDEX

AIR CONDITIONING UNIT ZJ, ZG BODY
Figure 24-160

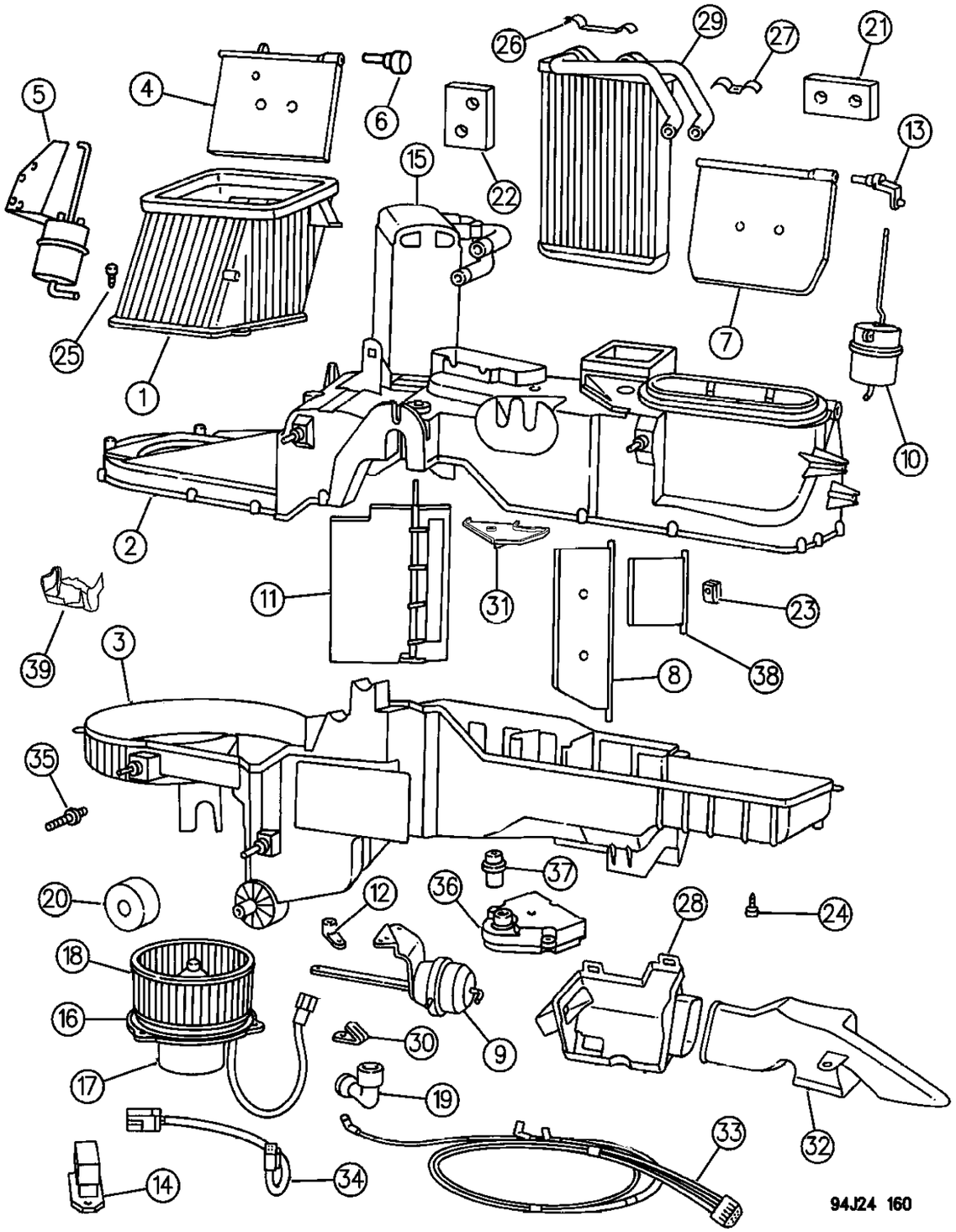

ITEM	PART NUMBER	QTY	BODY	MODEL	DESCRIPTION
					LABEL, Refrigerant Charge
	5511 6000	1			English
	5511 6001	1			French/English
1					HOUSING, Fresh/Recirculating
	4720 549	1			1994
	4886 383AA	1			1995-96
	4856 808	1			RHD
2					HOUSING, Upper
	4720 546	1			1994
	4778 422	1			1995
	4882 169	1			1996
	4856 810	1			RHD
3					HOUSING, Lower
	4720 547	1			1994
	4778 424	1			1995-96
	4856 809	1			RHD
4	4720 026	1			DOOR, Fresh Air
	4856 797	1			RHD
5	4720 349	1			ACTUATOR, Fresh Air Door
	4856 812	1			RHD
6	4720 029	1			RETAINER, Fresh Air Door
7	4720 023	1			DOOR, Vent/Defrost
8		1			DOOR, Heater Floor Duct
	4720 022				1994
	4778 420	1			1995-96
	4856 798	1			RHD
9					ACTUATOR, Floor Duct
	4720 282	1			1994
	4778 426	1			1995-96
	4856 815	1			RHD
10	4720 279	1			ACTUATOR, Vent/Defrost
11	4720 011	1			DOOR, Temp.
	4856 799	1			RHD
12	4720 347	1			LEVER, Floor Duct Door
	4856 813	1			RHD
13	4720 348	1			LEVER, Vent/Defrost Door
	4856 814	1			RHD
14	4720 278	1			RESISTOR, Blower Motor
15		1			EVAPORATOR, Core
	4723 518				1994
	4798 705	1			1995-96
	4856 795	1			RHD

MODEL CODES:

72=2 DR Wagon
74=4 DR Wagon
77=Open Body 93" Whlbase
78=Open Body 103" Whlbase - Export
T=2WD
J,N=4WD
U=4WD (RHD)

BODY STYLES:

YJ=Wrangler (4X4) "S"
Weangler (4X4) SE
Wrangler (4X4) Sahara
Wrangler (4X4) Renegade
XJ=Cherokee SE
Cherokee Sport
Cherokee Country
ZJ=Grand Cherokee SE
Grand Cherokee Laredo
Grand Cherolee Limited
ZG=Grand Cherokee European
Y1=Wrangler
X1=Cherokee
Z1=Grand Cherokee
KDX=Vehicles

AR = Use as Required - = Non Illustrated Part P.A.R. = Paint as Required

AIR CONDITIONING UNIT ZJ, ZG BODY
Figure 24-160

24-160B

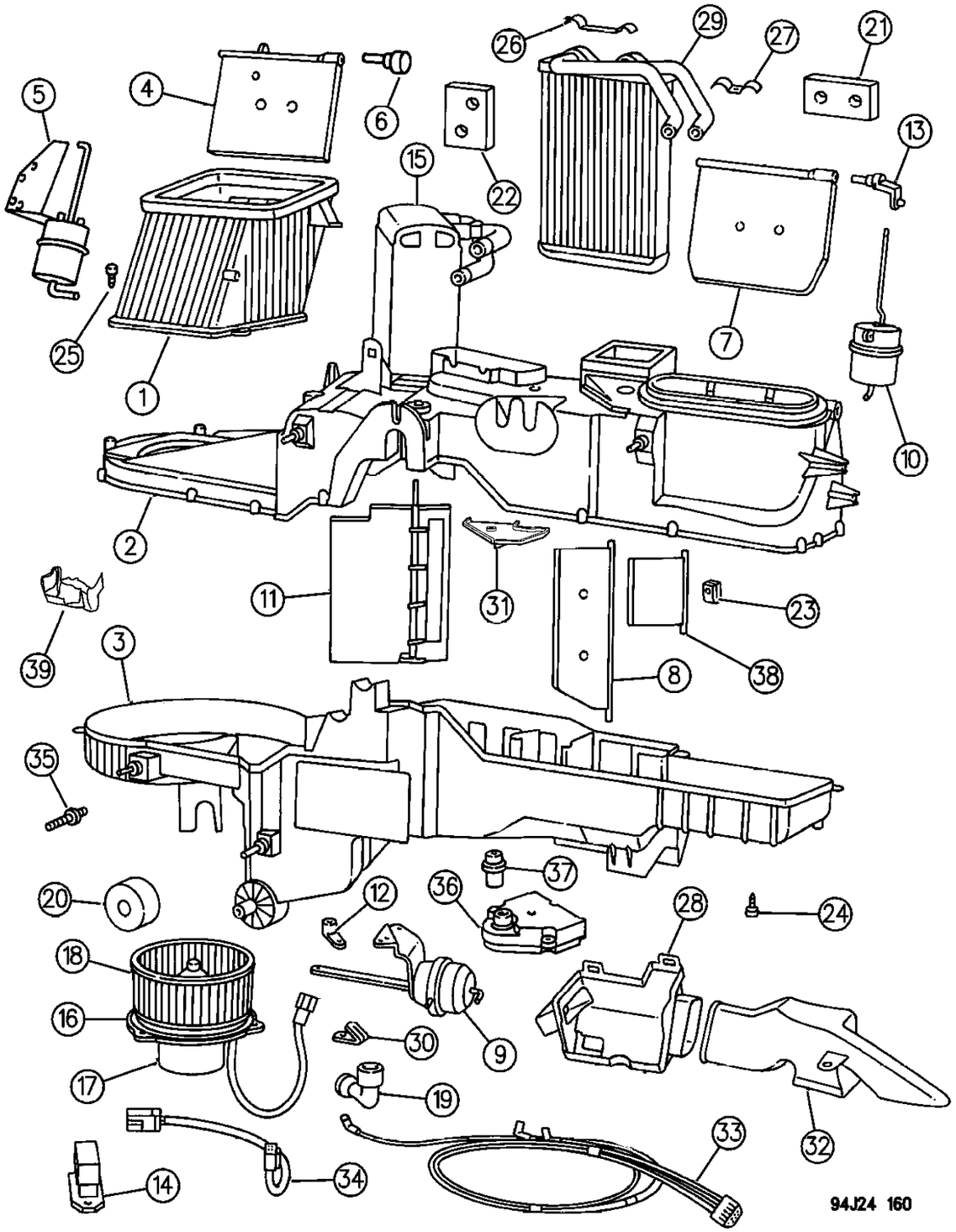

ITEM	PART NUMBER	QTY	BODY	MODEL	DESCRIPTION
16	4720 039	1			SEAL, Blower Motor
	4856 806	1			RHD
17					MOTOR, Blower
	4720 006	1			1994
	4778 417	1			1995-96
	4856 807	1			RHD
	4720 007	AR			SCREW
	2837 680	AR			CLAMP
18	4720 009	1			WHEEL, Motor
	4856 803	1			RHD
19	5210 066	1			TUBE, Motor Vent
20	4720 037	1			SEAL, Evaporator Drain to Dash
21	4720 033	1			SEAL, Heater Tubes to Dash
22	4720 034	1			SEAL, Evaporator Tubes to Dash
23	4720 045	1			U-NUT
24	4720 533	AR			SCREW
25	4720 534	AR			SCREW
26	4720 555	1			CLAMP
27	4720 028	1			RETAINER, Heater Core Tubes
28	4720 010	1			DUCT, Floor
	4856 802	1			RHD
29	4720 008	1			CORE, Heater
	4856 805	1			RHD
30	4720 031	1			RETAINER
31	4746 572	1			COVER
	4856 802	1			RHD
32	4720 560	1			DUCT, Air
	4856 667	1			RHD
33	4720 350	1			LINE, Vacuum
34	4720 531	1			HARNESS, Wiring
	4856 811	1			RHD
35	4720 032	4			STUD, Mounting
36	4720 015	1			SERVO, Temp. Door
	4856 806	1			RHD
37	4720 014	1			COUPLER, Air Mix ***
38	4778 421	1			DAMPER ***
	4856 800	1			RHD
39					INSULATOR, Cooling
	4746 664	1			1994, Grey
	4778 415	1			1995=96 White
	4856 794	1			RHD

MODEL CODES:

72=2 DR Wagon
74=4 DR Wagon
77=Open Body 93" Whlbase
78=Open Body 103" Whlbase - Export
T=2WD
J,N=4WD
U=4WD (RHD)

BODY STYLES:

YJ=Wrangler (4X4) "S"
Weangler (4X4) SE
Wrangler (4X4) Sahara
Wrangler (4X4) Renegade
XJ=Cherokee SE
Cherokee Sport
Cherokee Country
ZJ=Grand Cherokee SE
Grand Cherokee Laredo
Grand Cherolee Limited
ZG=Grand Cherokee European
Y1=Wrangler
X1=Cherokee
Z1=Grand Cherokee
KDX=Vehicles

AR = Use as Required - = Non Illustrated Part P.A.R. = Paint as Required

AIR CONDITIONING UNIT A.T.C. ZJ, ZG BODY
Figure 24-170

24-170D

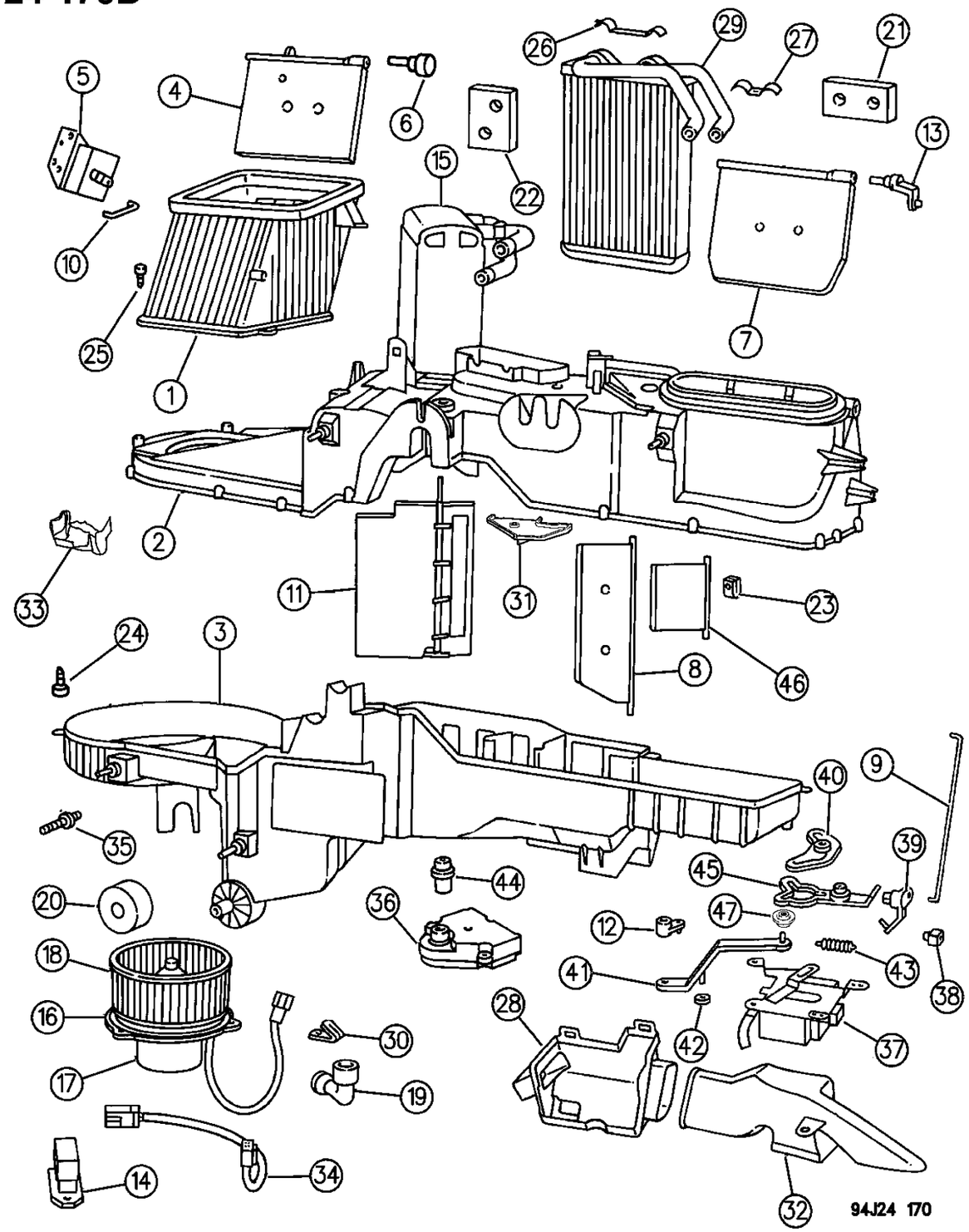

ITEM	PART NUMBER	QTY	BODY	MODEL	DESCRIPTION
	5511 6000	1			LABEL, Refrigerant Charge,1996
1					HOUSING, Fresh/Recirculating
	4720 549	1			1994
	4778 416	1			1995-96
	4856 808	1			RHD
2					HOUSING, Upper
	4720 546	1			1994
	4778 422	1			1995
	4882 169	1			1996
	4856 810	1			RHD
3					HOUSING, Lower
	4720 548	1			1994
	4778 423	1			1995-96
	4856 809	1			RHD
4	4720 024	1			DOOR, Fresh Air
	4856 796	1			RHD
5	4720 563	1			ACTUATOR, Fresh Air Door
	4856 786	1			RHD
6	4720 029	1			RETAINER, Fresh Air Door
7	4720 023	1			DOOR, Vent/Defrost
8					DOOR, Floor Duct
	4720 022	1			1994
	4778 420	1			1995-96
	4856 798	1			RHD
9	4720 571	1			ROD , A/C/Heater Door
10	4720 562	1			SHAFT, Door
	4856 785	1			RHD
11	4720 011	1			DOOR, Temp.
	4856 799	1			RHD
12		1			LEVER, Order Item #41
13	4720 570	1			LEVER, Vent/Defrost
	4856 790	1			RHD
14	4720 046	1			MODULE, Power (Resistor Motor)
15					EVAPORATOR, Core
	4723 518	1			1994
	4798 705	1			1995-96, Up to 11-1-95
	4882 168	1			1996, After 11-1-95
	4856 795	1			RHD
16	4720 039	1			SEAL, Motor
17					MOTOR, Blower
	4720 006	1			1994
	4778 417	1			1995-96

MODEL CODES:

72=2 DR Wagon
74=4 DR Wagon
77=Open Body 93" Whlbase
78=Open Body 103" Whlbase - Export
T=2WD
J,N=4WD
U=4WD (RHD)

BODY STYLES:

YJ=Wrangler (4X4) "S"
Weangler (4X4) SE
Wrangler (4X4) Sahara
Wrangler (4X4) Renegade
XJ=Cherokee SE
Cherokee Sport
Cherokee Country
ZJ=Grand Cherokee SE
Grand Cherokee Laredo
Grand Cherolee Limited
ZG=Grand Cherokee European
Y1=Wrangler
X1=Cherokee
Z1=Grand Cherokee
KDX=Vehicles

AR = Use as Required - = Non Illustrated Part P.A.R. = Paint as Required

AIR CONDITIONING UNIT A.T.C. ZJ, ZG BODY
Figure 24-170

24-170D

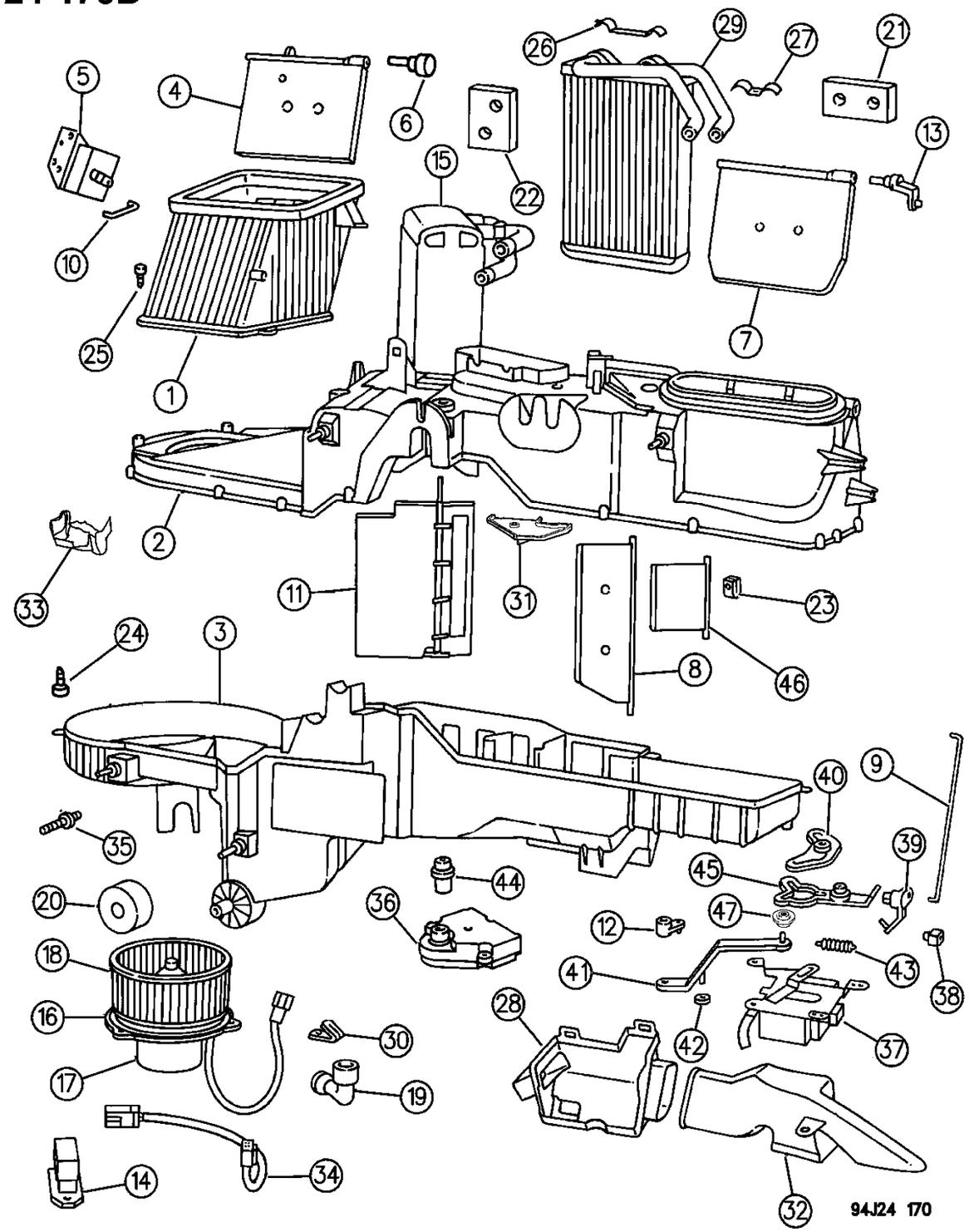

ITEM	PART NUMBER	QTY	BODY	MODEL	DESCRIPTION
	4856 807	1			RHD
	4720 007	AR			SCREW
	2837 680	AR			CLAMP
18	4720 009	1			WHEEL, Motor
	4856 803	1			RHD
19	5210 066	1			TUBE, Motor Vent
20	4720 037	1			SEAL, Evaporator Drain to Dash
21	4720 033	1			SEAL, Heater Tubes to Dash
22	4720 034	1			SEAL, Evaporator Tubes to Dash
23	4720 045	1			U-NUT
24	4720 533	AR			SCREW
25	4720 534	AR			SCREW
26	4720 555	1			CLAMP
27	4720 028	1			RETAINER, Heater Core Tubes
28	4720 010	1			DUCT, Floor
	4856 802	1			RHD
29	4720 008	1			CORE, Heater
	4856 805	1			RHD
30	4720 031	2			CLAMP
31	4746 572	1			COVER
	4856 802	1			RHD
32	4720 560	1			DUCT, Air
	4856 667	1			RHD
33					INSULATOR, Cooling
	4746 664	1			1994, Grey
	4778 415	1			1995-96, White
34					HARNESS, Wiring
	4720 532	1			1994-95
	4883 171	1			1996
	4856 669	1			RHD
35	4720 032	4			BRACKET, w/Stud Mtg.
	4856 785	1			RHD
	4746 573	4			SEAL, Stud
36	4647 039	1			MODULE, Door
37	4720 569	1			ACTUATOR, Heat/Defrost Door
	4856 791	1			RHD
	4720 558	1			BUSHING, Clip
38	4720 576	1			CLIP
39	4720 572	1			LEVER
	4856 789	1			RHD
40	4720 559	1			PLATE
	4856 668	1			RHD

MODEL CODES:

72=2 DR Wagon
74=4 DR Wagon
77=Open Body 93" Whlbase
78=Open Body 103" Whlbase - Export
T=2WD
J,N=4WD
U=4WD (RHD)

BODY STYLES:

YJ=Wrangler (4X4) "S"
Weangler (4X4) SE
Wrangler (4X4) Sahara
Wrangler (4X4) Renegade
XJ=Cherokee SE
Cherokee Sport
Cherokee Country
ZJ=Grand Cherokee SE
Grand Cherokee Laredo
Grand Cherolee Limited
ZG=Grand Cherokee European
Y1=Wrangler
X1=Cherokee
Z1=Grand Cherokee
KDX=Vehicles

AR = Use as Required - = Non Illustrated Part P.A.R. = Paint as Required

24-170D

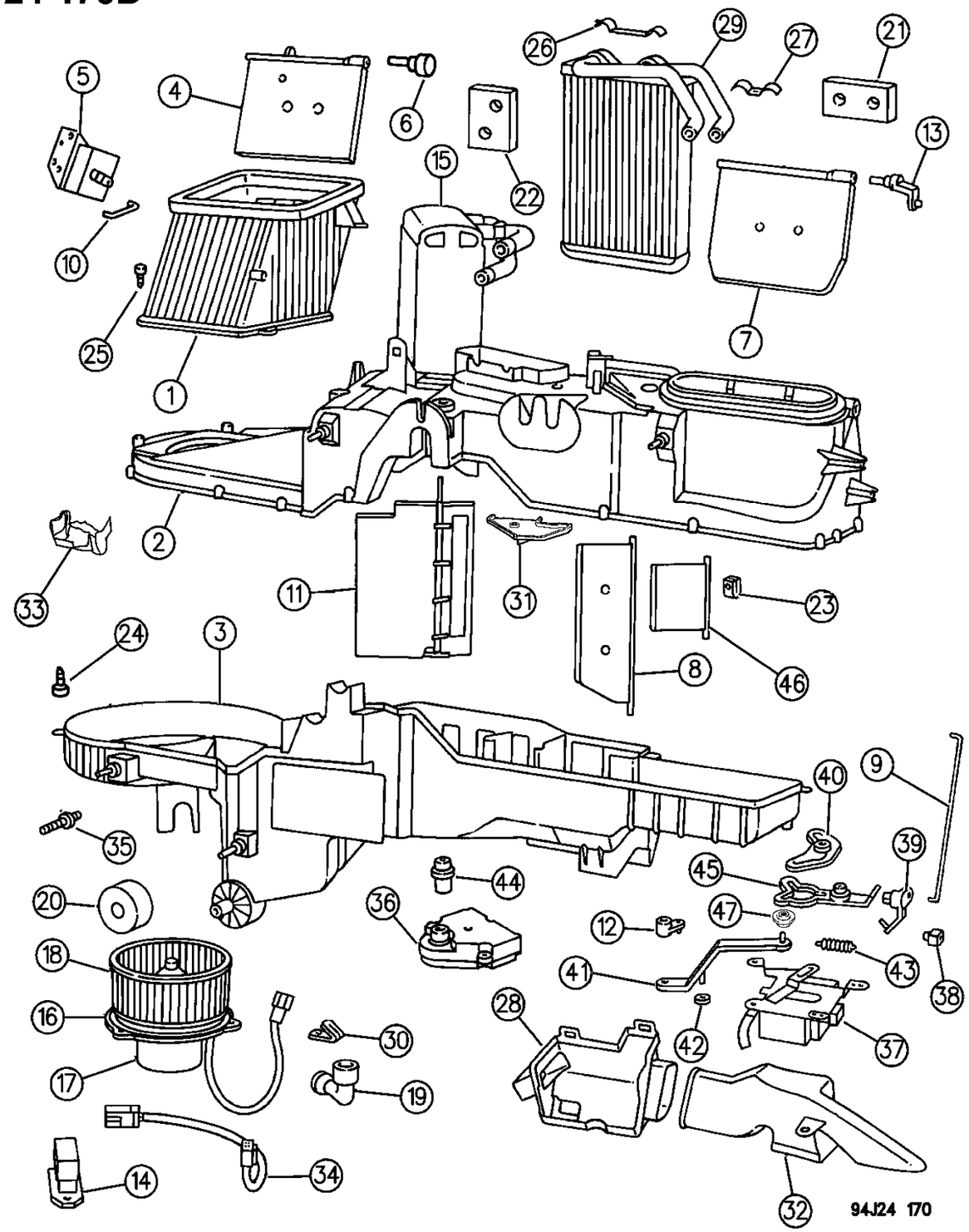

ITEM	PART NUMBER	QTY	BODY	MODEL	DESCRIPTION
41	4886 136AA	1			LEVER
	4886 137AA	1			RHD
42	4746 882	1			WASHER
43	4746 883	1			SPRING
44	4720 014	1			LEVER, Temperature
45	4762 086	1			PLATE
	4856 788	1			RHD
46	4778 421	1			DAMPER ***
	4856 800	1			RHD
47	4720 558	1			BUSHING, Lever

MODEL CODES:

72=2 DR Wagon
74=4 DR Wagon
77=Open Body 93" Whlbase
78=Open Body 103" Whlbase - Export
T=2WD
J,N=4WD
U=4WD (RHD)

BODY STYLES:

YJ=Wrangler (4X4) "S"
Weangler (4X4) SE
Wrangler (4X4) Sahara
Wrangler (4X4) Renegade
XJ=Cherokee SE
Cherokee Sport
Cherokee Country
ZJ=Grand Cherokee SE
Grand Cherokee Laredo
Grand Cherolee Limited
ZG=Grand Cherokee European
Y1=Wrangler
X1=Cherokee
Z1=Grand Cherokee
KDX=Vehicles

AR = Use as Required - = Non Illustrated Part P.A.R. = Paint as Required

PLUMBING, HEATER YJ BODY
Figure 24-205

24-205A

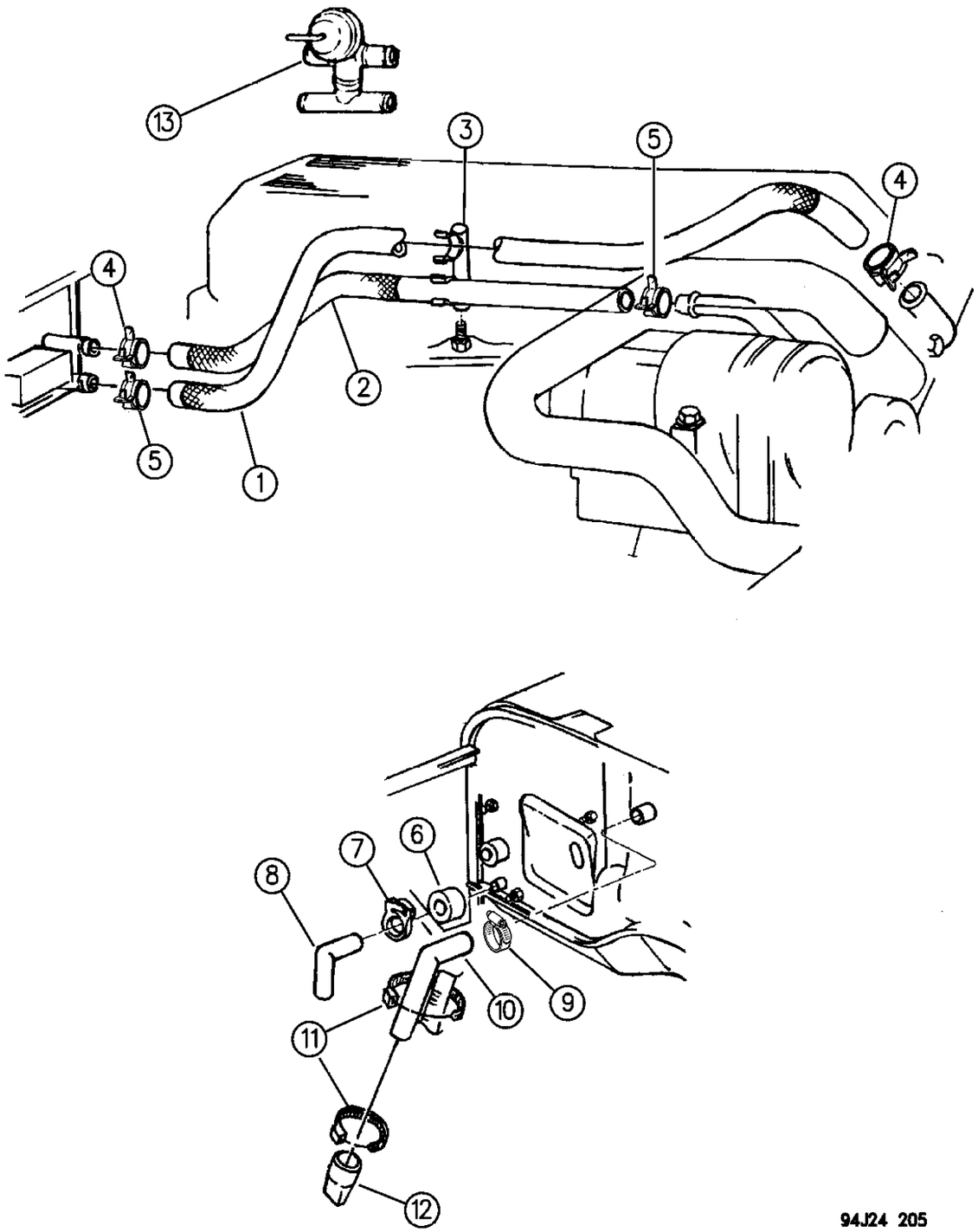

ITEM	PART NUMBER	QTY	BODY	MODEL	DESCRIPTION
1					HOSE AND SLEEVE, Thermostat to Core ***
	5600 4710	1			2.5L Engine
	5600 4708	1			4.0L Engine
	5503 6757	1			2.5L Engine, RHD
	5503 6759	1			4.0L Engine, RHD
2					HOSE, w/Sleeve, Core to Pump
	5600 4712	1			2.5L Engine
	5503 6221	1			4.0L Engine
	5503 6756	1			2.5L Engine, RHD
	5503 6758	1			4.0L Engine, RHD
	5503 5912	1			HOSE, Heater By-Pass, 4.0L Engine Export
3	5503 5933	1			BRACKET, Hose Support
4	6502 017	2			CLAMP
5	6502 018	2			CLAMP
6	J546 2712	1			SEAL, Heater Drain to Dash
7		1			CLAMP (DNS)
8	J546 3814	1			HOSE, Water Drain
9		1			CLAMP (DNS)
10	J546 3813	1			HOSE, Air Duct Drain
11	6015 756	2			STRAP
12	J098 7079	1			CAP, Drain Hose
13	5503 6836	1			VALVE, Heater Control, RHD
	5503 6837	1			HOSE, w/Tee, Heater control Vacuum Supply

MODEL CODES:

72=2 DR Wagon
74=4 DR Wagon
77=Open Body 93" Whlbase
78=Open Body 103" Whlbase - Export
T=2WD
J,N=4WD
U=4WD (RHD)

BODY STYLES:

YJ=Wrangler (4X4) "S"
Weangler (4X4) SE
Wrangler (4X4) Sahara
Wrangler (4X4) Renegade
XJ=Cherokee SE
Cherokee Sport
Cherokee Country
ZJ=Grand Cherokee SE
Grand Cherokee Laredo
Grand Cherolee Limited
ZG=Grand Cherokee European
Y1=Wrangler
X1=Cherokee
Z1=Grand Cherokee
KDX=Vehicles

AR = Use as Required - = Non Illustrated Part P.A.R. = Paint as Required

« RETURN TO GROUP INDEX

RECEIVER DRIER AND LINES YJ BODY
Figure 24-207

24-207

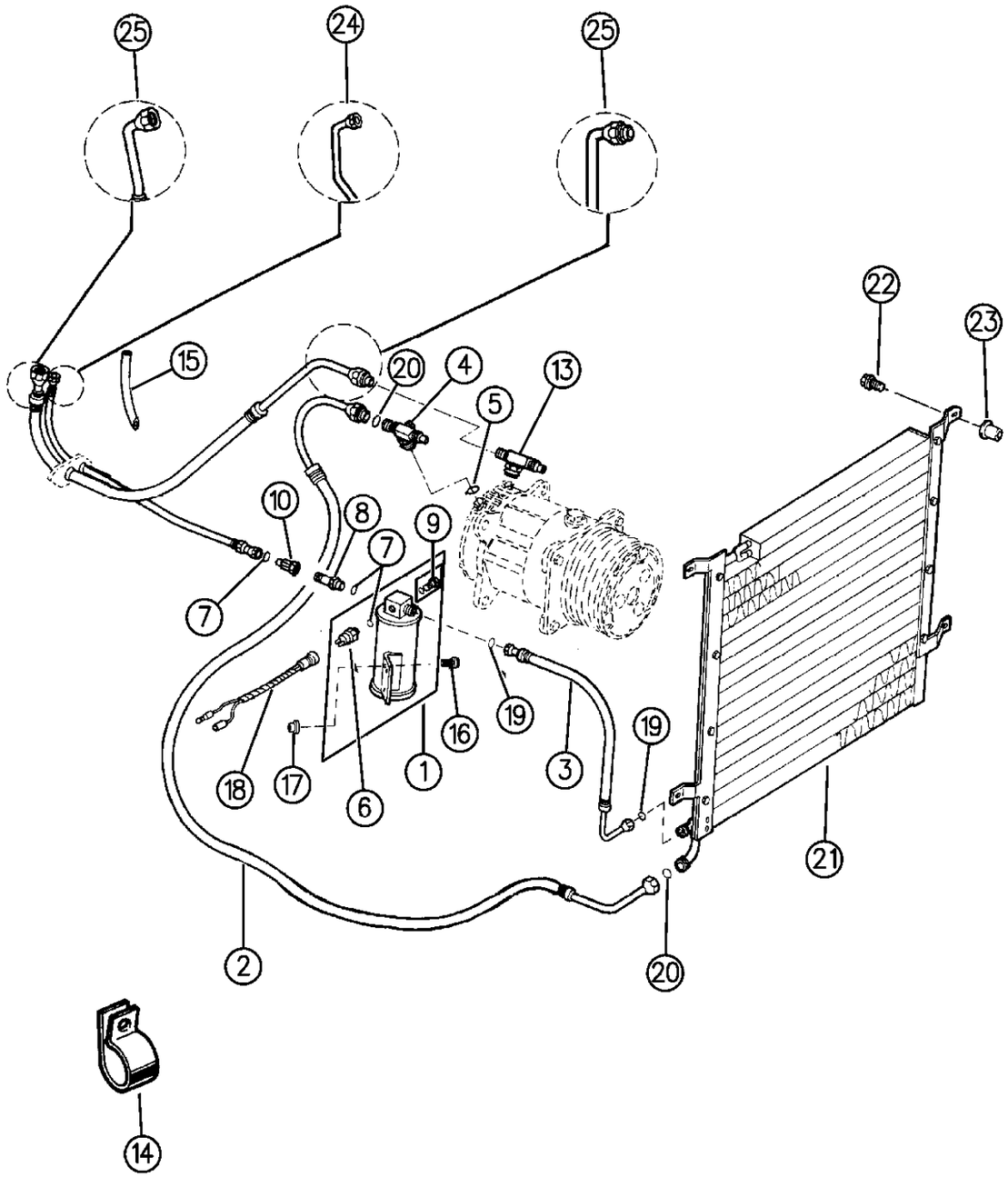

94J24 207

ITEM	PART NUMBER	QTY	BODY	MODEL	DESCRIPTION
1					DRIER, Receiver
	5600 1485	1			R12
	5503 6268	1			R134A
	5503 6744	1			RHD
2	5503 6271	1			LINE, Compressor to Condenser
3	5503 6270	1			LINE, Condenser to Receiver
4	5300 1290	1			VALVE, Discharge (R12 Only)
5					O-RING
	J322 2353	AR			R12
	4741 705	AR			R134A
6					SWITCH, Low Pressure Cut Off
	J374 1260	1			R12
	4773 763	1			R134A
7	J317 1788	AR			O-RING
8	J317 1794	1			COUPLING, Male
9	J369 2994	1			VALVE PACKAGE, Relief ***
10	J317 1795	1			COUPLING, Female
13	3600 1011	1			VALVE, Suction (R12 Only)
14	S012 0530	1			CLIP
15	5503 5645	1			HOSE, Drain
16	J941 4428	3			SCREW
17	J400 5237	3			NUT, Well
18	J576 3596	1			WIRE, Low Freon
19	J321 2113	2			O-RING
20	J321 2112	2			O-RING
21					CORE, Condenser
	8220 3026	1			2.5L Engine
	5503 6212	1			4.0L Engine
22	J400 6906	4			SCREW
23	J400 3120	4			NUT, Well
24					LINE, Receiver To Evaporator
	5503 5747	1			1994
	5503 6257	1			1995
25		1			LINE, Evaporator To Compressor
	5503 5746	1			R12
	5503 6258	1			R134A
					HOSE, RHD
		1			Suction Evap/Comp
	5503 6745	1			2.5L Engine
	5503 6749	1			4.0L Engine
					A/C Discharge
	5503 6746	1			2.5L Engine

MODEL CODES:

72=2 DR Wagon
74=4 DR Wagon
77=Open Body 93" Whlbase
78=Open Body 103" Whlbase - Export
T=2WD
J,N=4WD
U=4WD (RHD)

BODY STYLES:

YJ=Wrangler (4X4) "S"
Weangler (4X4) SE
Wrangler (4X4) Sahara
Wrangler (4X4) Renegade
XJ=Cherokee SE
Cherokee Sport
Cherokee Country
ZJ=Grand Cherokee SE
Grand Cherokee Laredo
Grand Cherolee Limited
ZG=Grand Cherokee European
Y1=Wrangler
X1=Cherokee
Z1=Grand Cherokee
KDX=Vehicles

AR = Use as Required - = Non Illustrated Part P.A.R. = Paint as Required

RECEIVER DRIER AND LINES YJ BODY
Figure 24-207

24-207

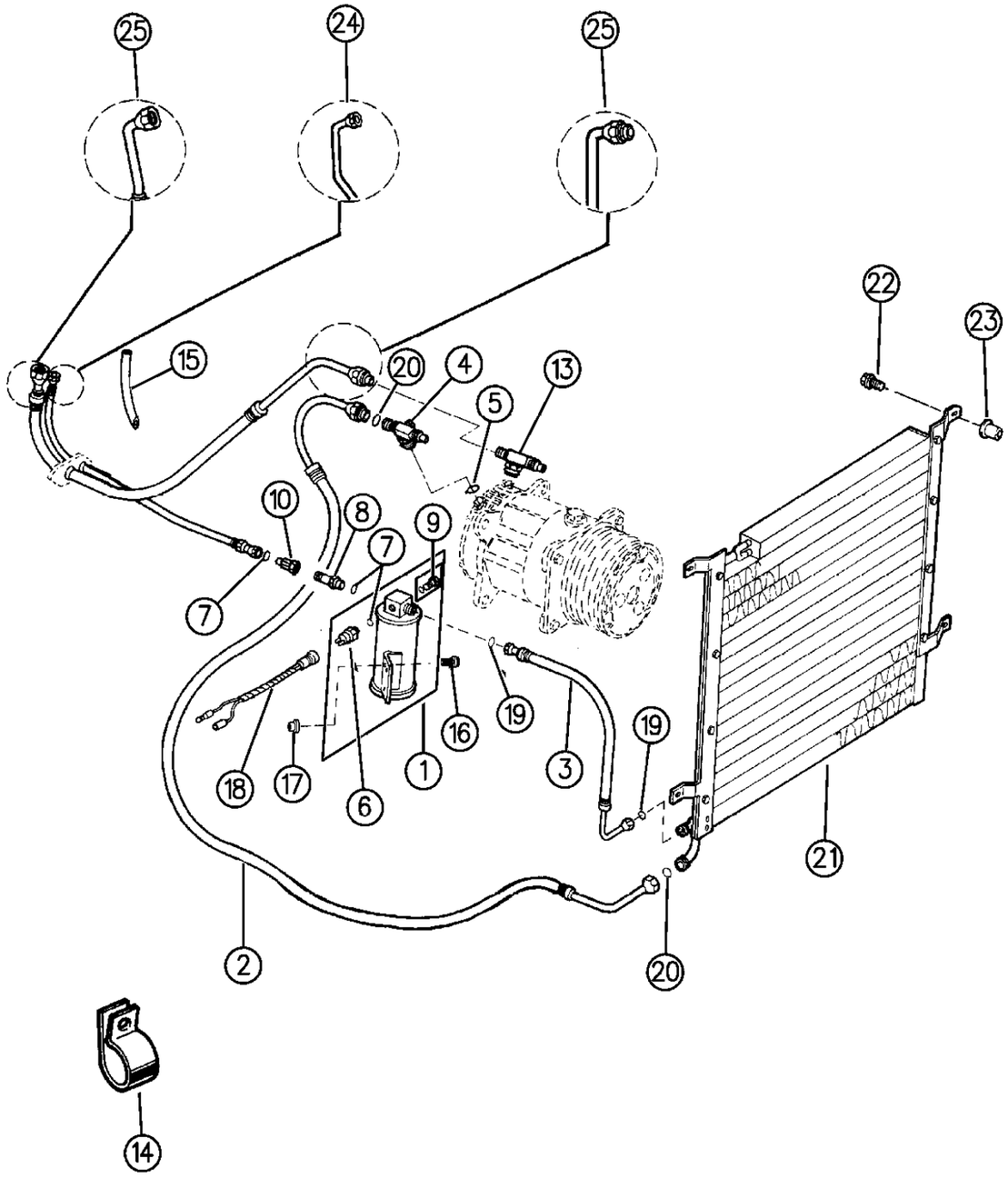

ITEM	PART NUMBER	QTY	BODY	MODEL	DESCRIPTION
	5503 6750	1			4.0L Engine
	5503 6747	1			Condensor to Receiver
					A/C Liquid
	5503 6748	1			2.5L Engine
	5503 6752	1			4.0L Engine

MODEL CODES:

72=2 DR Wagon
74=4 DR Wagon
77=Open Body 93" Whlbase
78=Open Body 103" Whlbase - Export
T=2WD
J,N=4WD
U=4WD (RHD)

BODY STYLES:

YJ=Wrangler (4X4) "S"
Weangler (4X4) SE
Wrangler (4X4) Sahara
Wrangler (4X4) Renegade

XJ=Cherokee SE
Cherokee Sport
Cherokee Country

ZJ=Grand Cherokee SE
Grand Cherokee Laredo
Grand Cherolee Limited
ZG=Grand Cherokee European

Y1=Wrangler
X1=Cherokee
Z1=Grand Cherokee
KDX=Vehicles

AR = Use as Required - = Non Illustrated Part P.A.R. = Paint as Required

HOSES, HEATER 4.0L ENGINE XJ BODY
Figure 24-210

24-210

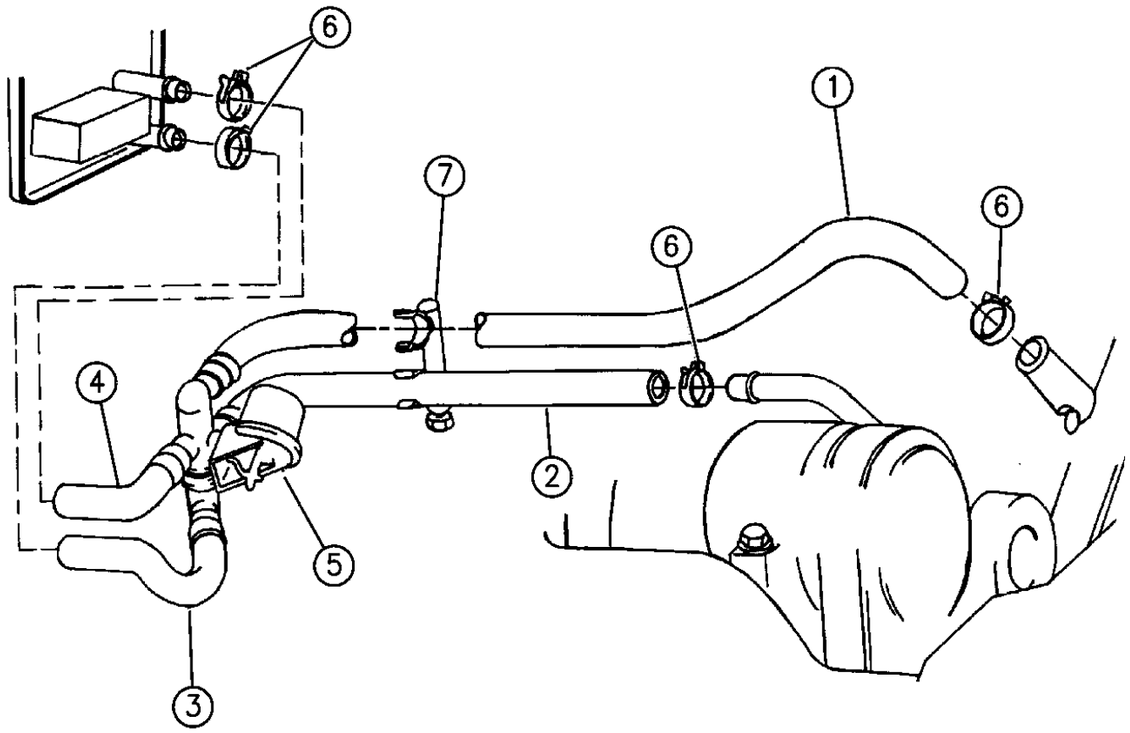

94J24 210

ITEM	PART NUMBER	QTY	BODY	MODEL	DESCRIPTION
1					HOSE, w/Sleeve, Thermostat to Water Valve, Supply
	5503 6106	1			1994
	5503 6947	1			1995-96
	4637 938	1			SLEEVE
					HOSE, Supply (RHD)
	5503 5910	1			1994
	5503 6951	1			1995-96
	5503 6801	1	X1		Severe Use
					HOSE, Return (RHD)
	5503 5909	1			1994
	5503 6952	1			1995-96
	5503 6803	1	X1		Severe Use
	5264 145	2			SLEEVE RHD
	5264 146	2			SLEEVE, Hose
2					HOSE, w/Sleeve, Valve to Pump, Return
	5503 6108	1			1994
	5503 6949	1			1995-96
3	5503 6107	1			HOSE
4	5600 4787	1			HOSE
5	5600 5900	1			VALVE, Water, 4 Port
	3849 199	1			RHD
	5503 6851	1			HOSE, Vacuum (Red) RHD
6					CLAMP
	6502 017	AR			22.0 - 26.0 mm
	6502 018	AR			25.2 - 28.9 mm
7	5503 5933	1			BRACKET, Hose Support

MODEL CODES:

72=2 DR Wagon
74=4 DR Wagon
77=Open Body 93" Whlbase
78=Open Body 103" Whlbase - Export
T=2WD
J,N=4WD
U=4WD (RHD)

BODY STYLES:

YJ=Wrangler (4X4) "S"
Weangler (4X4) SE
Wrangler (4X4) Sahara
Wrangler (4X4) Renegade
XJ=Cherokee SE
Cherokee Sport
Cherokee Country
ZJ=Grand Cherokee SE
Grand Cherokee Laredo
Grand Cherolee Limited
ZG=Grand Cherokee European
Y1=Wrangler
X1=Cherokee
Z1=Grand Cherokee
KDX=Vehicles

AR = Use as Required - = Non Illustrated Part P.A.R. = Paint as Required

« RETURN TO GROUP INDEX

LINES, HEATER AND AIR CONDITIONING VACUUM XJ BODY
Figure 24-215

24-215A

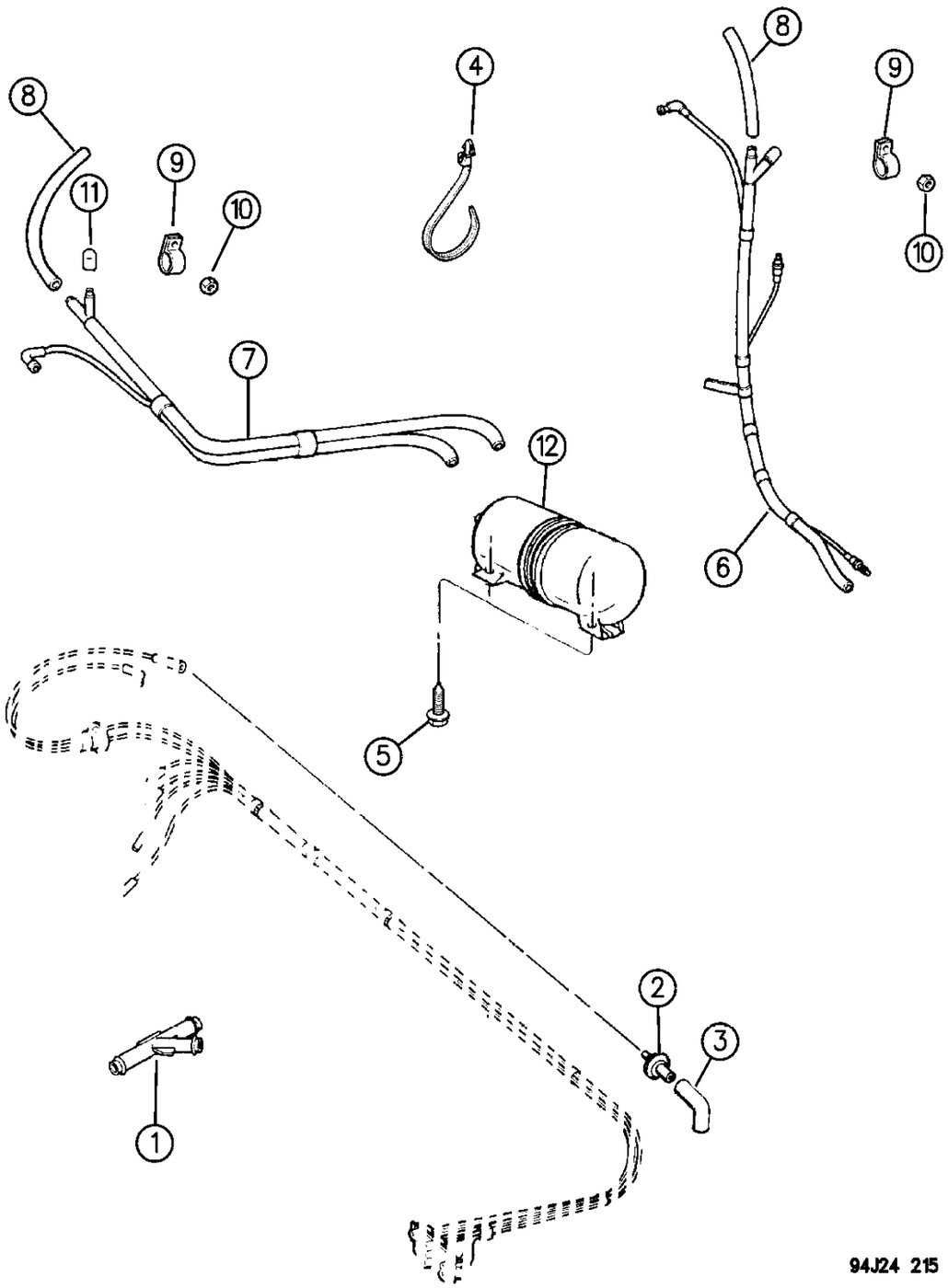

ITEM	PART NUMBER	QTY	BODY	MODEL	DESCRIPTION
1	J400 6848	1			CONNECTOR, Diesel Engine
2	J322 5641	1			VALVE, Check, Diesel Engine
3	3300 0657	1			HOSE, Diesel Engine
					HOSE, w/Check Valve
	5503 5510	1			2.5L Engine RHD, w/o Speed Control
	5503 6273	1			2.5L Engine RHD, w/Speed Control
	5503 6331	1			4.0L Engine RHD, w/o Speed Control
	5503 5511	1			4.0L Engine RHD, w/Speed Control
4	3420 1788	1			STRAP, w/o Diesel Engine
5	3420 1895	2			SCREW
6	5503 5650	1			HOSE, Vacuum, w/Check Valve 4.0L Engine
7	5503 5649	1			HOSE, Vacuum, w/Check Valve 2.5L Engine
8	8330 0080	AR			HOSE, Vacuum
9	J417 5263	1			CLIP, 4.0L Engine
10	J941 6918	1			NUT, 4.0L Engine
11	3420 2137	AR			CAP, Vacuum, Diesel Engine
12	5200 4366	1			TANK, Vacuum
	4644 244	1			HARNESS, Vacuum
	5503 6861	1			RHD

MODEL CODES:

72=2 DR Wagon
74=4 DR Wagon
77=Open Body 93" Whlbase
78=Open Body 103" Whlbase - Export
T=2WD
J,N=4WD
U=4WD (RHD)

BODY STYLES:

YJ=Wrangler (4X4) "S"
Weangler (4X4) SE
Wrangler (4X4) Sahara
Wrangler (4X4) Renegade

XJ=Cherokee SE
Cherokee Sport
Cherokee Country

ZJ=Grand Cherokee SE
Grand Cherokee Laredo
Grand Cherolee Limited
ZG=Grand Cherokee European

Y1=Wrangler
X1=Cherokee
Z1=Grand Cherokee
KDX=Vehicles

AR = Use as Required - = Non Illustrated Part P.A.R. = Paint as Required

« RETURN TO GROUP INDEX

RECEIVER DRIER, CONDENSOR AND LINES 2.5L ENGINE XJ BODY 1994-95
Figure 24-220

24–220A

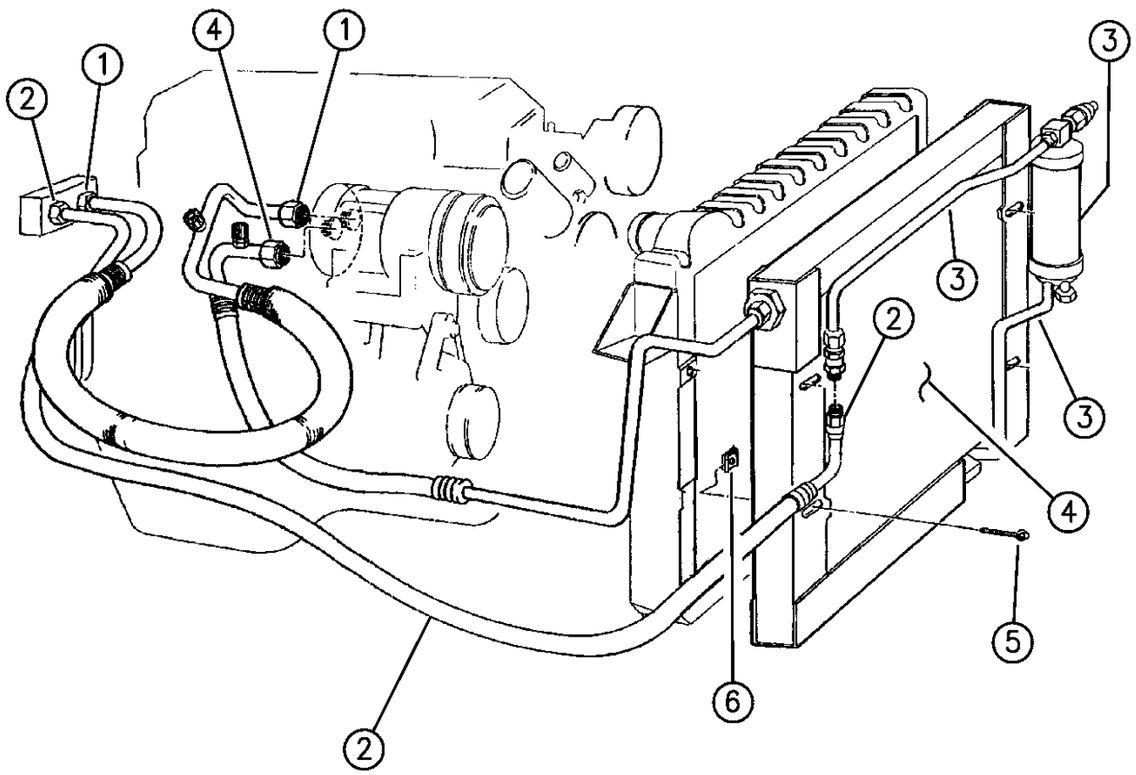

94J24 220

ITEM	PART NUMBER	QTY	BODY	MODEL	DESCRIPTION
1	5503 6708	1			HOSE, Suction
	5503 6710	1			RHD, 1994
	5503 6706	1			RHD, 1995
	4741 705	AR			O-RING
2	5503 6896	1			HOSE, Liquid
	5600 2196	1			CHINA
	5503 6231	1			RHD
	4740 401	AR			O-RING
3	5503 6186	1			DRIER, Receiver (Tube use 56002191)
	4797 001	1			w/o Switch
	4796 072	1			SWITCH, Cut-Out
	4882 139	1			O-RING, Switch
	4773 106	1			O-RING, Relief Valve
4	5600 2190	1			CONDENSER
	5503 5952	1			RHD
5		4			SCREW (DNS)
6	6101 283	1			NUT
7	5503 6232	1			Line, A/C DISCHARGE ***

MODEL CODES:

72=2 DR Wagon
74=4 DR Wagon
77=Open Body 93" Whlbase
78=Open Body 103" Whlbase - Export
T=2WD
J,N=4WD
U=4WD (RHD)

BODY STYLES:

YJ=Wrangler (4X4) "S"
Weangler (4X4) SE
Wrangler (4X4) Sahara
Wrangler (4X4) Renegade

XJ=Cherokee SE
Cherokee Sport
Cherokee Country

ZJ=Grand Cherokee SE
Grand Cherokee Laredo
Grand Cherolee Limited
ZG=Grand Cherokee European

Y1=Wrangler
X1=Cherokee
Z1=Grand Cherokee
KDX=Vehicles

AR = Use as Required - = Non Illustrated Part P.A.R. = Paint as Required

RECEIVER DRIER, CONDENSOR AND LINES 2.5L ENGINE XJ BODY 1996
Figure 24-222

24-222

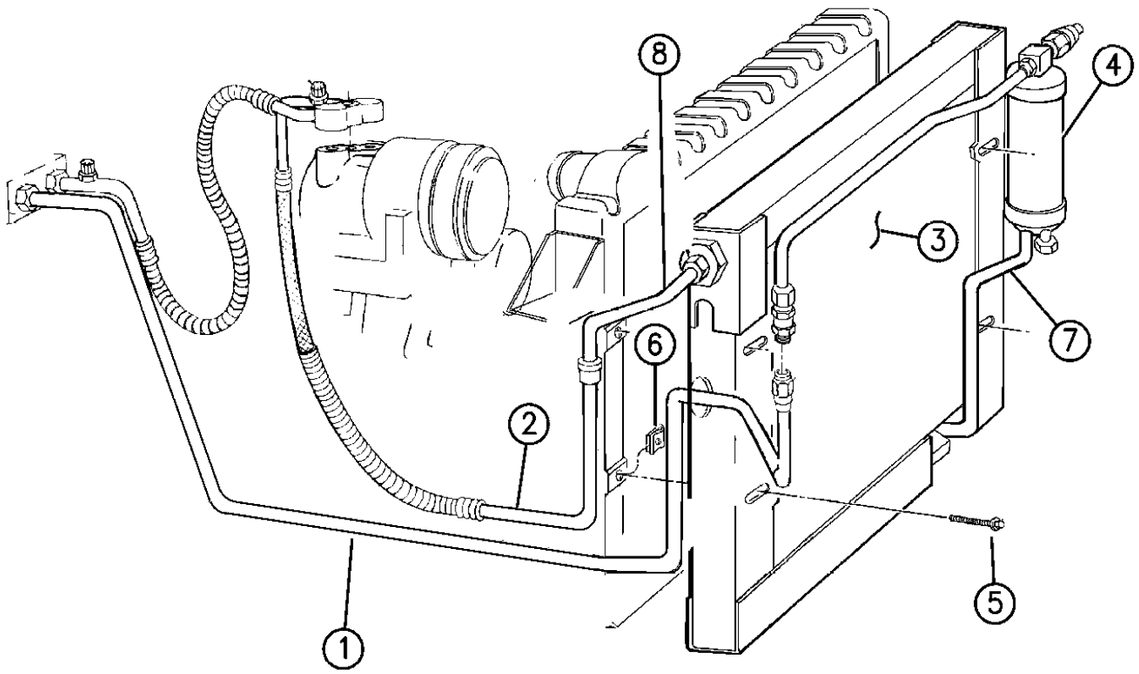

94J24 222

ITEM	PART NUMBER	QTY	BODY	MODEL	DESCRIPTION
1	5503 7158	1			LINE, Liquid
2	5503 7157	1			LINE, Suction and Discharge
3	5600 2190	1			CORE, Condensor
4	4797 001	1			DRIER, Receiver
5		4			SCREW (DNS)
6		4			U-NUT (DNS)
7	5503 6243	1			LINE, Condensor to Receiver
8	5503 7221	1			LINE, Discharge Jumper Tube
	4740 401	2			O-RING, Liquid Line

MODEL CODES:

72=2 DR Wagon
74=4 DR Wagon
77=Open Body 93" Whlbase
78=Open Body 103" Whlbase - Export
T=2WD
J,N=4WD
U=4WD (RHD)

BODY STYLES:

YJ=Wrangler (4X4) "S"
Weangler (4X4) SE
Wrangler (4X4) Sahara
Wrangler (4X4) Renegade
XJ=Cherokee SE
Cherokee Sport
Cherokee Country
ZJ=Grand Cherokee SE
Grand Cherokee Laredo
Grand Cherolee Limited
ZG=Grand Cherokee European
Y1=Wrangler
X1=Cherokee
Z1=Grand Cherokee
KDX=Vehicles

AR = Use as Required - = Non Illustrated Part P.A.R. = Paint as Required

RECEIVER DRIER, CONDENSOR AND LINES 2.5L ENGINE XJ BODY (RHD) 1996
Figure 24-224

24-224

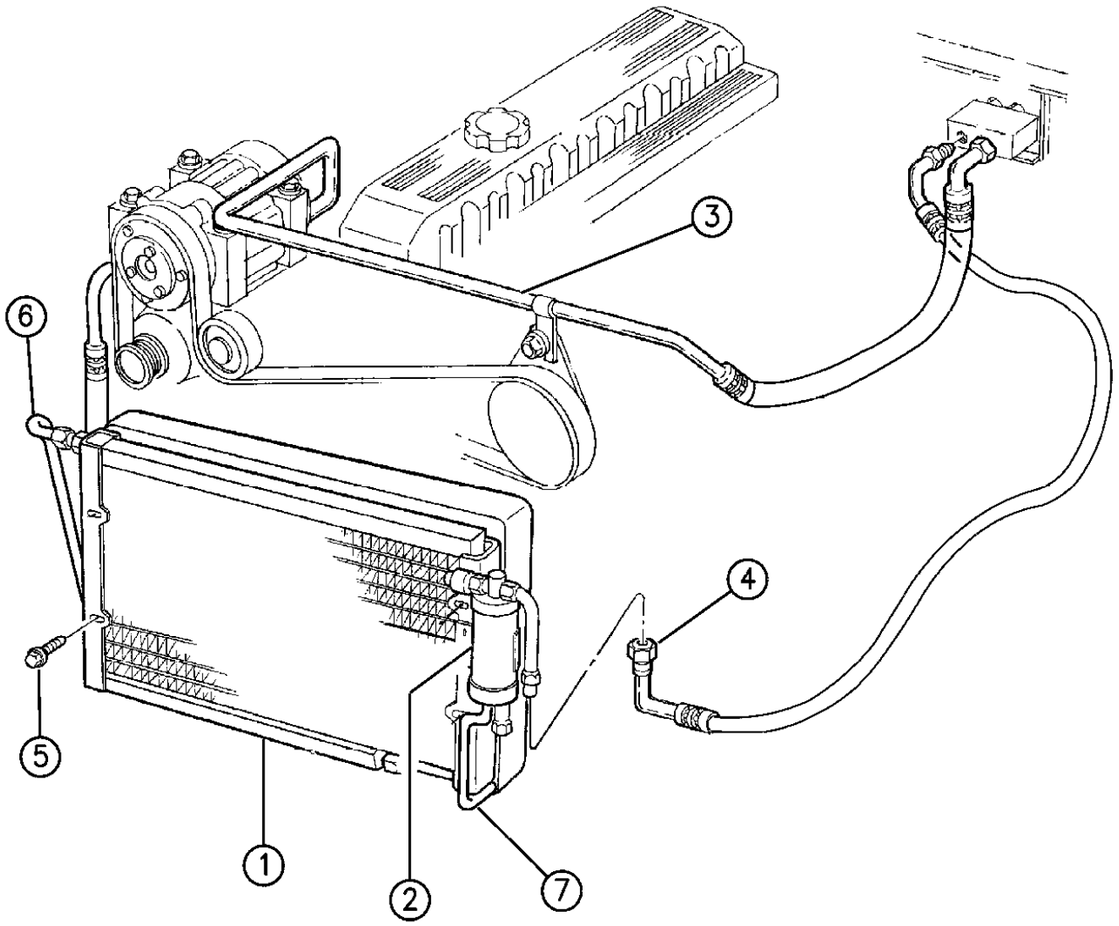

94J24 224

ITEM	PART NUMBER	QTY	BODY	MODEL	DESCRIPTION
1	5503 5952	1			CORE, Condensor
2	5503 7099	1			DRIER, Receiver
	5503 6233	1			TUBE, Receiver
3	5503 6706	1			LINE, Suction
4	5503 7232	1			LINE, Receiver to Evaporator
	5602 2020	1		X1	
	5602 2022	1			LINE, Evaporator to Compressor
5		4			SCREW (DNS)
6	5503 6896	1			LINE, Discharge
7	5503 7100	1			LINE, Liquid Condensor to Receiver
	4741 705	2			O-RING, Discharge Line

MODEL CODES:

72=2 DR Wagon
74=4 DR Wagon
77=Open Body 93" Whlbase
78=Open Body 103" Whlbase - Export
T=2WD
J,N=4WD
U=4WD (RHD)

BODY STYLES:

YJ=Wrangler (4X4) "S"
Weangler (4X4) SE
Wrangler (4X4) Sahara
Wrangler (4X4) Renegade
XJ=Cherokee SE
Cherokee Sport
Cherokee Country
ZJ=Grand Cherokee SE
Grand Cherokee Laredo
Grand Cherolee Limited
ZG=Grand Cherokee European
Y1=Wrangler
X1=Cherokee
Z1=Grand Cherokee
KDX=Vehicles

AR = Use as Required - = Non Illustrated Part P.A.R. = Paint as Required

RECEIVER DRIER, CONDENSOR AND LINES 4.0L ENGINE XJ BODY 1994-95
Figure 24-225

24-225

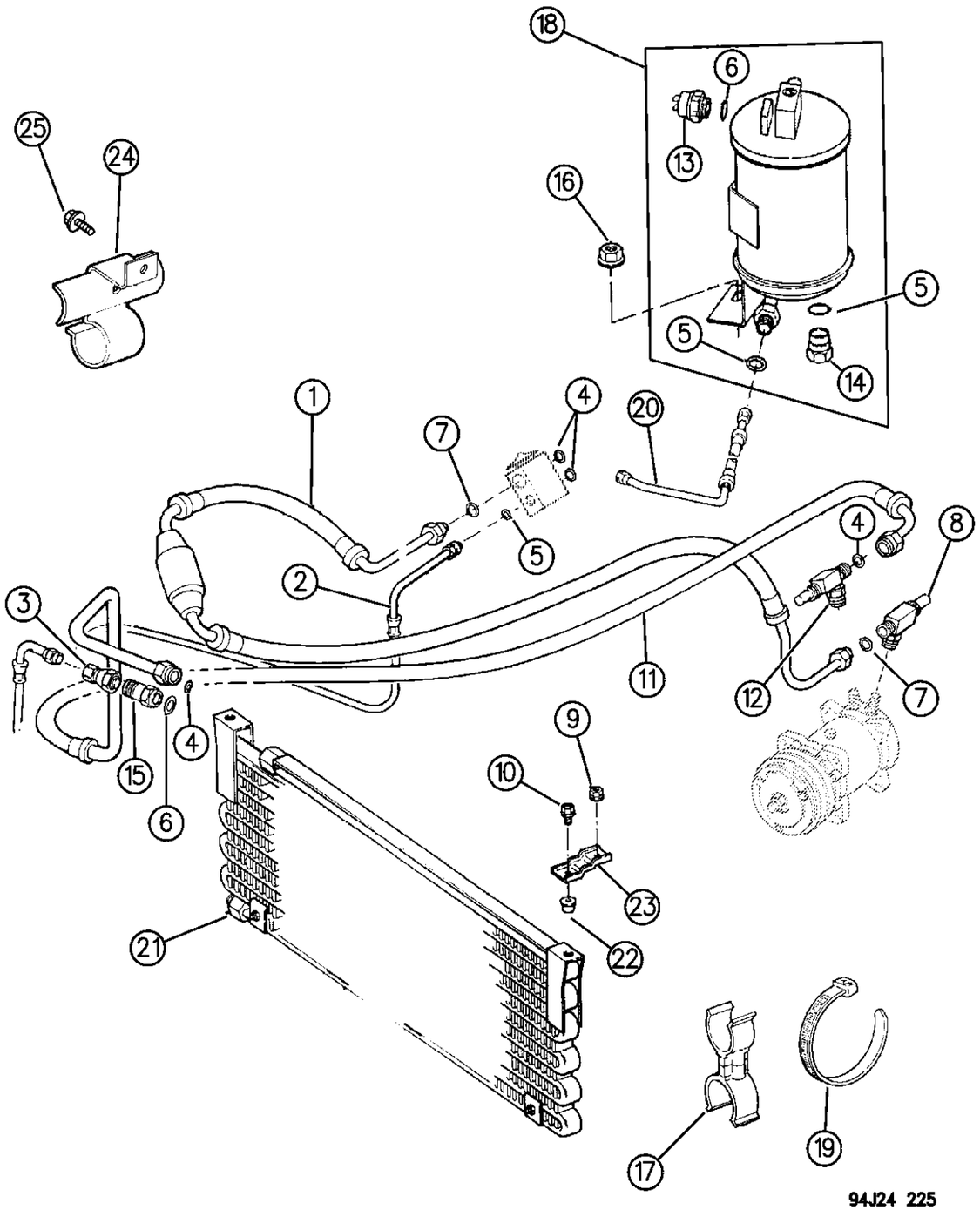

ITEM	PART NUMBER	QTY	BODY	MODEL	DESCRIPTION
1					LINE, Suction
	4773 204	1			R12
	5503 6707	1			R134A,1994
	5503 7204	1			R134A,1995
	5503 5513	1			R12, RHD
	5503 6297	1			R134A, RHD
					CAP, A/C Line
	4778 052	1			Large
	4723 018	1			Small
2					LINE, Receiver to Condenser
	5600 4839	1			R12
	5503 6252	1			R134A
	5503 5518	1			R12, RHD
	5503 6245	1			R134A, RHD
	4741 652	AR			O-RING, R134A
	4761 825	AR			O-RING, 5/8"
3	J317 1795	1			COUPLING, Female 1994 ***
4					O-RING
	J321 2112	AR			R12
	4741 705	AR			R134A, 1/2"
	4741 652	AR			R134A, 3/8"
5	J321 2113	AR			O-RING, R12
6	J317 1788	AR			O-RING, R12
7	J322 2353	AR			O-RING, R12
8	3600 1011	1			VALVE, Suction
9	1150 2722	2			NUT
10	J400 6906	1			SCREW
11					LINE, A/C Discharge
	5600 4350	1			R12
	5503 6253	1			R134A
	5503 5515	1			R12, RHD
	5503 6260	1			R134A, RHD
	4796 883	1			PORT, Service (High Side Discharge) ***
12	5300 1290	1			VALVE, Discharge
13					SWITCH, Cut-Off
	J374 1260				R12
	4796 072				R134A
14	5600 1227	1			PACKAGE, Relief Valve
15	J317 1794	1			COUPLING, Male 1994 ***
16	3420 1711	1			NUT
17	5600 1786	1			CLIP
18		1			DRIER, Receiver

MODEL CODES:

72=2 DR Wagon
74=4 DR Wagon
77=Open Body 93" Whlbase
78=Open Body 103" Whlbase - Export
T=2WD
J,N=4WD
U=4WD (RHD)

BODY STYLES:

YJ=Wrangler (4X4) "S"
Weangler (4X4) SE
Wrangler (4X4) Sahara
Wrangler (4X4) Renegade
XJ=Cherokee SE
Cherokee Sport
Cherokee Country
ZJ=Grand Cherokee SE
Grand Cherokee Laredo
Grand Cherolee Limited
ZG=Grand Cherokee European
Y1=Wrangler
X1=Cherokee
Z1=Grand Cherokee
KDX=Vehicles

AR = Use as Required - = Non Illustrated Part P.A.R. = Paint as Required

RECEIVER DRIER, CONDENSOR AND LINES 4.0L ENGINE XJ BODY 1994-95
Figure 24-225

24-225

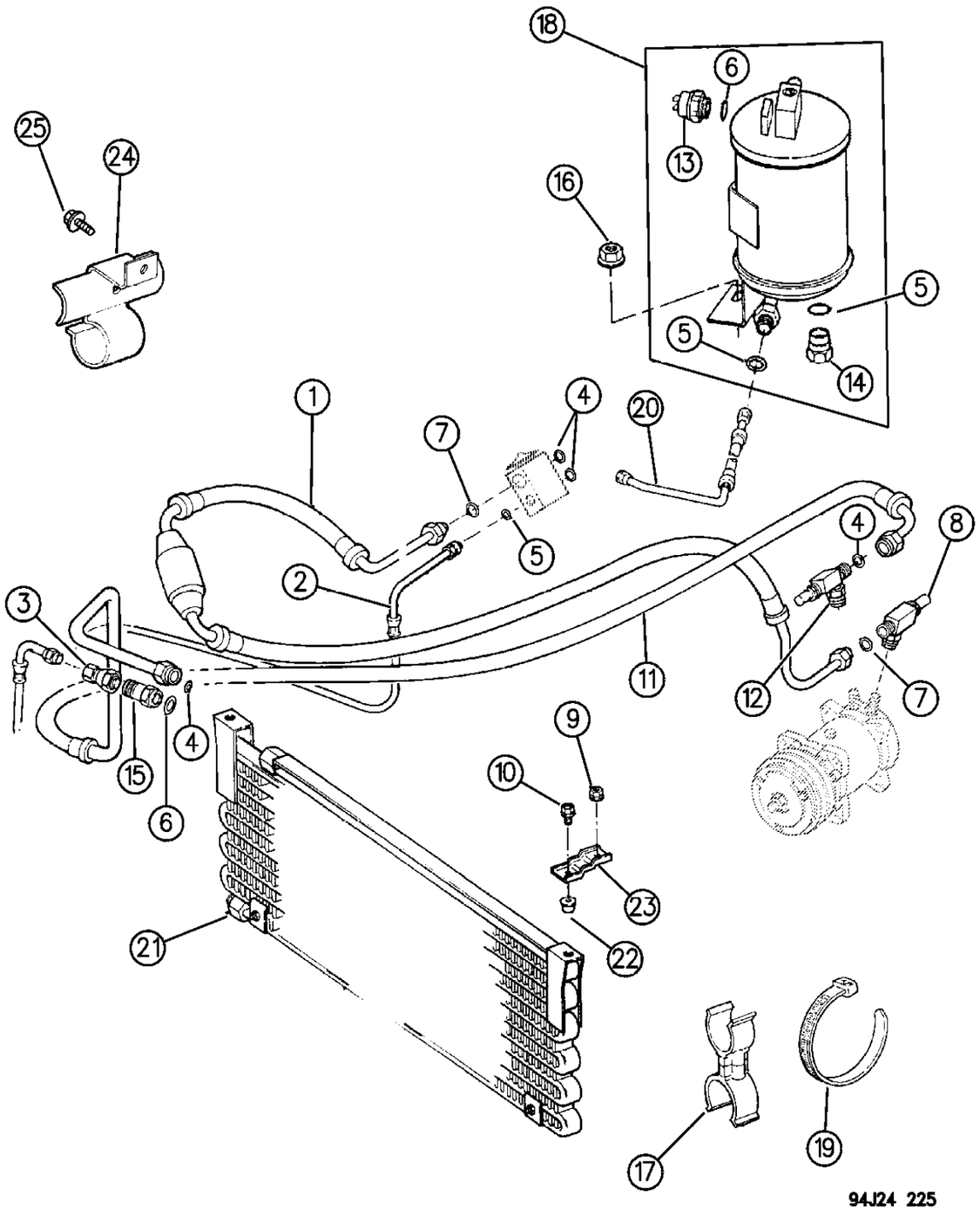

ITEM	PART NUMBER	QTY	BODY	MODEL	DESCRIPTION
	5503 5772				R12
	4797 002				R134A
		1			BRACKET, Drier Mounting RHD
	5534 5510				1994
	5503 6583				1995
19	J322 3227	1			STRAP
20					LINE, Receiver to Evaporator
	5600 4378	1			R12
	5503 6247	1			R134A, 1994
	5503 7203	1			R134A, 1995
	5503 5517	1			R12, RHD, 1994
	5503 6319	1			(R12)RHD, 1995
	5503 6720	1			R314A, RHD 1994
	5503 6280	1			R314A, RHD 1995
	4741 652	AR			O-RING, R134A
21	5600 2957	1			CORE, Condenser
	5503 5999	1			RHD
22	J400 3120	1			NUT
23	5600 2231	2			BRACKET, Radiator to Condenser
	J400 7348	2			BOLT, Condenser Mounting Bracket
24	5600 1275	1			BRACKET, Hose to Support
25	3420 1489	1			SCREW
	4796 883	1			PORT, High Pressure Service ***

MODEL CODES:

72=2 DR Wagon
74=4 DR Wagon
77=Open Body 93" Whlbase
78=Open Body 103" Whlbase - Export
T=2WD
J,N=4WD
U=4WD (RHD)

BODY STYLES:

YJ=Wrangler (4X4) "S"
Weangler (4X4) SE
Wrangler (4X4) Sahara
Wrangler (4X4) Renegade
XJ=Cherokee SE
Cherokee Sport
Cherokee Country
ZJ=Grand Cherokee SE
Grand Cherokee Laredo
Grand Cherolee Limited
ZG=Grand Cherokee European
Y1=Wrangler
X1=Cherokee
Z1=Grand Cherokee
KDX=Vehicles

AR = Use as Required - = Non Illustrated Part P.A.R. = Paint as Required

RECEIVER DRIER, CONDENSOR AND LINES 4.0L ENGINE XJ BODY 1996
Figure 24-227

24-227A

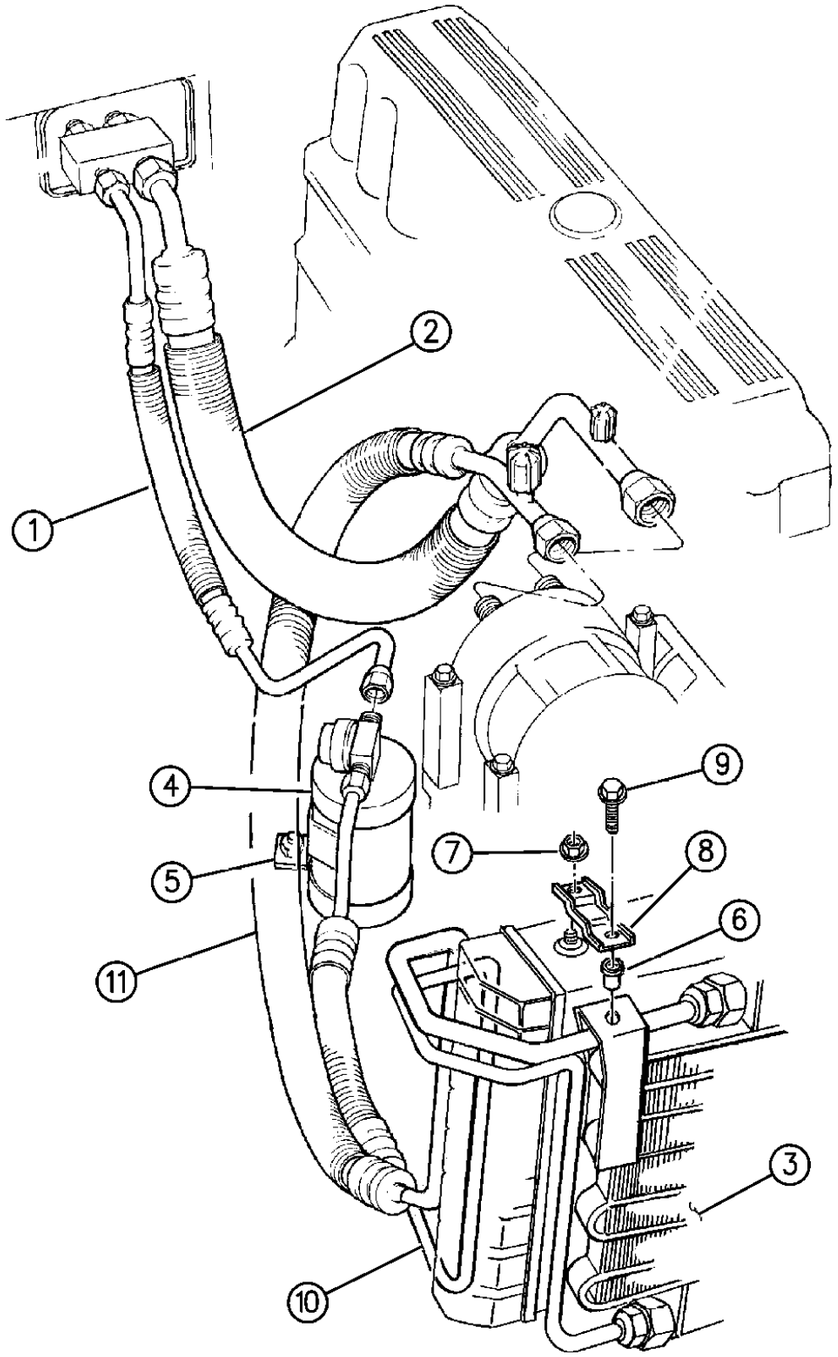

94J24 227

ITEM	PART NUMBER	QTY	BODY	MODEL	DESCRIPTION
1	5503 7203	1			LINE, Drier to Evaporator
2	5503 7204	1			LINE, Suction
3	5600 2957	1			CORE, Condensor
4	4797 002	1			DRIER, Receiver
5		4			NUT (DNS)
6	J400 3120	2			NUT
7	1150 2722	2			NUT
8	5600 2231	1			BRACKET
9	J400 7348	2			BOLT
10	5503 6252	1			LINE, Condensor to Drier
11	5503 6253	1			LINE, Discharge
	5600 1227	1			VALVE, Relief
	4796 072	1			SWITCH, Cut-Off
	4796 883	1			PORT, High Pressure Service ***
					O-RING
	4740 401	2			Liquid Line
	4741 705	2			Discharge Line

MODEL CODES:

72=2 DR Wagon
74=4 DR Wagon
77=Open Body 93" Whlbase
78=Open Body 103" Whlbase - Export
T=2WD
J,N=4WD
U=4WD (RHD)

BODY STYLES:

YJ=Wrangler (4X4) "S"
Weangler (4X4) SE
Wrangler (4X4) Sahara
Wrangler (4X4) Renegade

XJ=Cherokee SE
Cherokee Sport
Cherokee Country

ZJ=Grand Cherokee SE
Grand Cherokee Laredo
Grand Cherolee Limited
ZG=Grand Cherokee European

Y1=Wrangler
X1=Cherokee
Z1=Grand Cherokee
KDX=Vehicles

AR = Use as Required - = Non Illustrated Part P.A.R. = Paint as Required

RECEIVER DRIER, CONDENSOR AND LINES 4.0L ENGINE XJ BODY (RHD) 1996
Figure 24-229

24–229

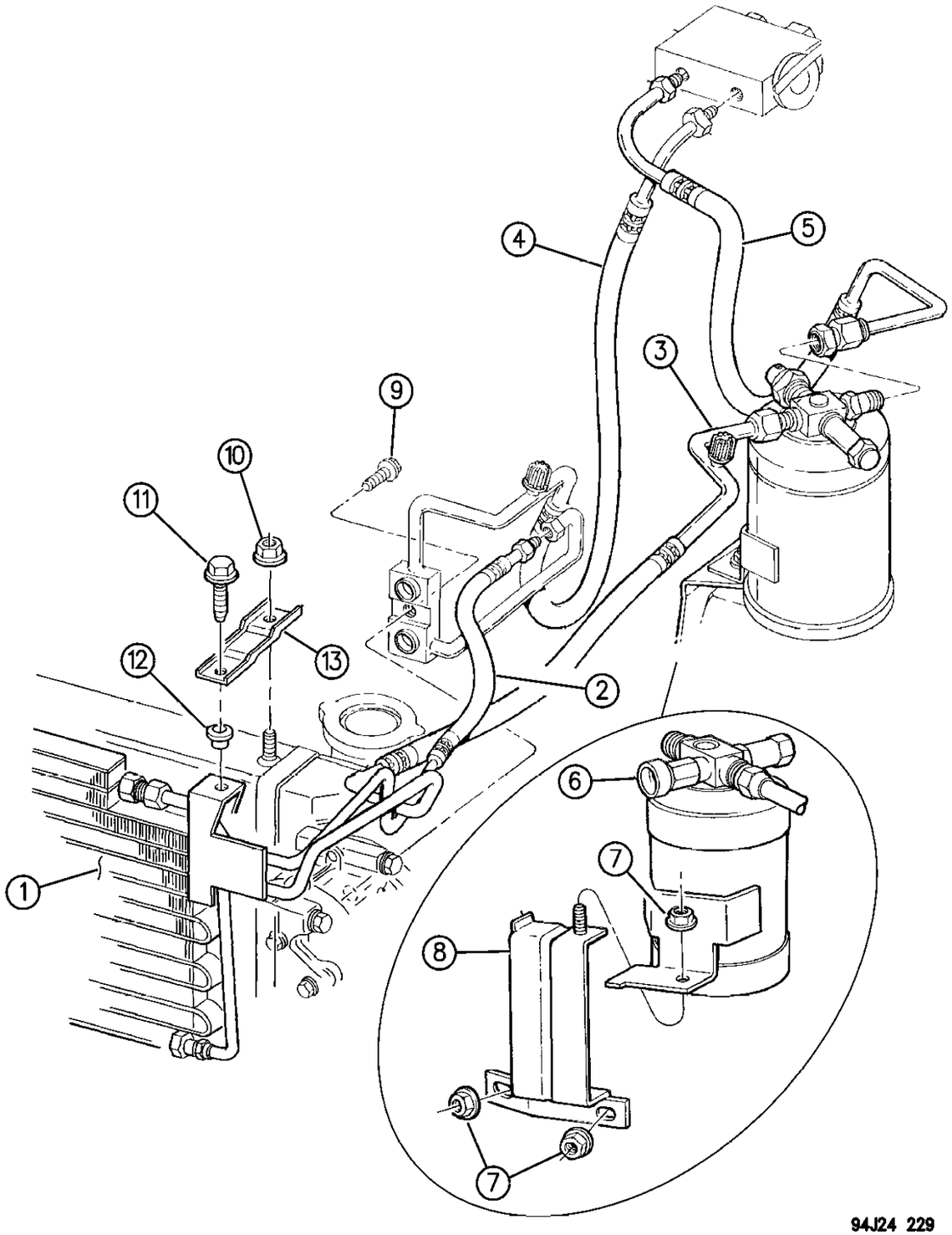

ITEM	PART NUMBER	QTY	BODY	MODEL	DESCRIPTION
1	5503 5999	1			CORE, Condensor
	5503 6779	1			Severe Use
2	5503 6260	1			LINE, Discharge
3	5503 6245	1			LINE, Condensor to Drier
4	5503 6297	1			LINE, Manifold Suction
5	5503 6720	1			LINE, Drier to Evaporator
6	4797 002	1			DRIER, Receiver
7	6101 467	AR			NUT
8	5503 6902	1			BRACKET, Drier
9		1			BOLT (DNS)
10	1150 2722	2			NUT
11	J400 7348	2			BOLT
12	J400 3120	2			NUT
13	5600 2231	1			BRACKET
	4796 883	1			PORT, High Pressure ***
					O-RING
	4741 705	2			Discharge Line
	4740 401	2			Liquid Line

MODEL CODES:

72=2 DR Wagon
74=4 DR Wagon
77=Open Body 93" Whlbase
78=Open Body 103" Whlbase - Export
T=2WD
J,N=4WD
U=4WD (RHD)

BODY STYLES:

YJ=Wrangler (4X4) "S"
Weangler (4X4) SE
Wrangler (4X4) Sahara
Wrangler (4X4) Renegade
XJ=Cherokee SE
Cherokee Sport
Cherokee Country
ZJ=Grand Cherokee SE
Grand Cherokee Laredo
Grand Cherolee Limited
ZG=Grand Cherokee European
Y1=Wrangler
X1=Cherokee
Z1=Grand Cherokee
KDX=Vehicles

AR = Use as Required - = Non Illustrated Part P.A.R. = Paint as Required

« RETURN TO GROUP INDEX

RECEIVER DRIER, CONDENSER AND LINES 2.1 DIESEL ENGINE XJ BODY 1994
Figure 24-230

24-230

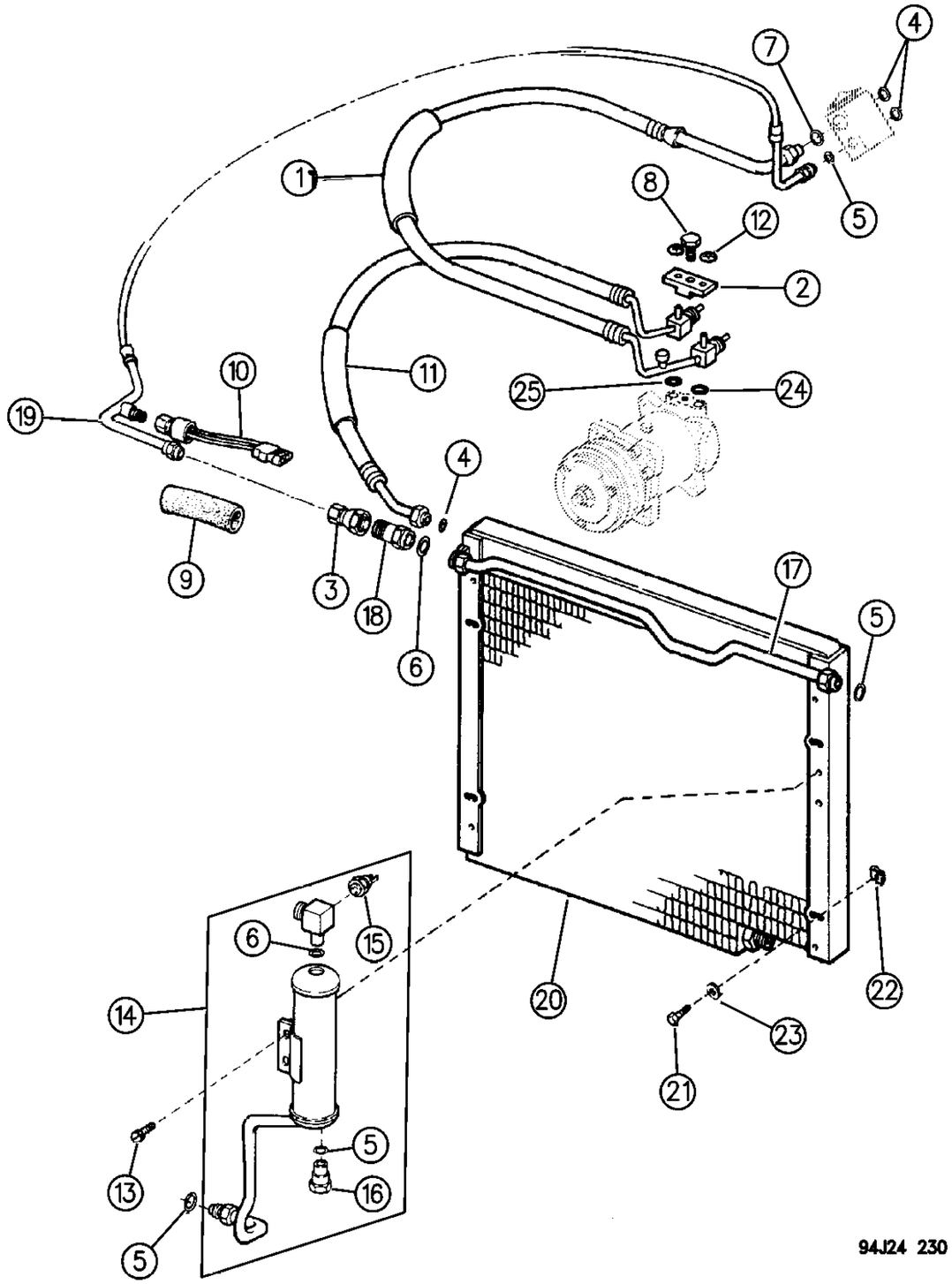

ITEM	PART NUMBER	QTY	BODY	MODEL	DESCRIPTION
1	5600 1273	1			LINE, Evaporator to Compressor, w/Valve
2	5600 1403	1			RETAINER, Valve
3	J317 1795	1			COUPLING, Female
4	J321 2112	3			O-RING
5	J321 2113	4			O-RING
6	J317 1788	2			O-RING
7	J322 2353	1			O-RING
8	3420 2171	1			SCREW
9	J369 3082	1			INSULATOR (Part must be Modified for this Application)
10	5600 1310	1			SWITCH, Cut-Off
11	5600 6196	1			LINE, Compressor to Condenser, w/Valve
12	J400 6866	2			NUT, Push
13	9421 073	2			SCREW
14	4773 761	1			DRIER, Receiver
15		1			SWITCH, Cut-Off
	J374 1260				R12
	4773 763				R134A
16	J369 2994	1			VALVE PACKAGE, Relief ***
17	5600 2202	1			TUBE, Receiver
18	J317 1794	1			COUPLING, Male
19	5600 6195	1			LINE, Receiver to Evaporator
20	5600 2205	1			CORE, Condenser
21	3420 1819	4			SCREW
22	1150 0660	4			NUT
23	1150 0323	4			WASHER
24	J374 1266	1			O-RING
25	J374 1267	1			O-RING

MODEL CODES:

72=2 DR Wagon
74=4 DR Wagon
77=Open Body 93" Whlbase
78=Open Body 103" Whlbase - Export
T=2WD
J,N=4WD
U=4WD (RHD)

BODY STYLES:

YJ=Wrangler (4X4) "S"
Weangler (4X4) SE
Wrangler (4X4) Sahara
Wrangler (4X4) Renegade
XJ=Cherokee SE
Cherokee Sport
Cherokee Country
ZJ=Grand Cherokee SE
Grand Cherokee Laredo
Grand Cherolee Limited
ZG=Grand Cherokee European
Y1=Wrangler
X1=Cherokee
Z1=Grand Cherokee
KDX=Vehicles

AR = Use as Required - = Non Illustrated Part P.A.R. = Paint as Required

« RETURN TO GROUP INDEX

RECEIVER DRIER,CONDENSOR AND LINES 2.5L DIESEL ENGINE XJ BODY
Figure 24-232

24-232

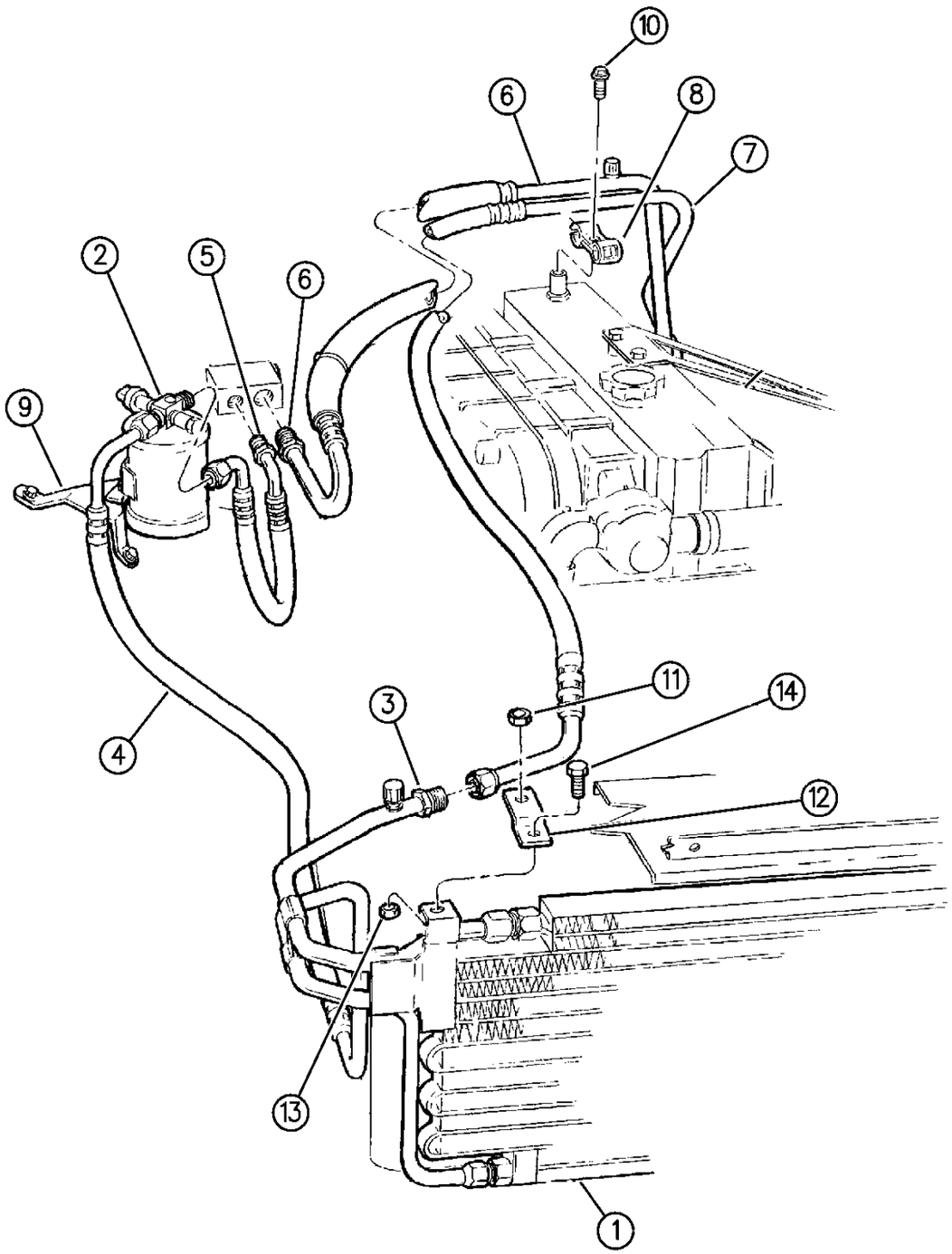

ITEM	PART NUMBER	QTY	BODY	MODEL	DESCRIPTION
1	5600 2957	1			CORE, Condensor
	5503 5999	1			RHD
2	5503 6112	1			DRIER, Receiver
	5600 1227	1			VALVE, Relief
3	5503 6891	1			LINE, Discharge
4	5503 6116	1			LINE, Liquid
5	5503 6193	1			LINE, Liquid
6	5503 6191	1			LINE, Suction
	5503 6192	1			RHD
7	5503 6147	1			LINE, Discharge
	5503 6148	1			RHD
8	5503 6414	1			BRACKET, Line Support
9					BRACKET, Drier Support
	5503 6487	1			1995
	5503 6901	1			1996
	3420 1711	1			NUT, Bracket
10		3			SCREW (DNS)
11	1150 2722	2			NUT
12	5600 2231	2			BRACKET, Radiator to Condenser
13	J400 3120	2			NUT
14	J400 7348	2			BOLT
	4796 883	1			PORT, High Pressure Service ***
	4741 705	2			O-RING, Discharge Line
	4740 401	2			O-RING, Liquid Line
	4761 825	2			O-RING, Suction Line
	4741 716	2			O-RING, Compressor Block

MODEL CODES:

72=2 DR Wagon
74=4 DR Wagon
77=Open Body 93" Whlbase
78=Open Body 103" Whlbase - Export
T=2WD
J,N=4WD
U=4WD (RHD)

BODY STYLES:

YJ=Wrangler (4X4) "S"
Weangler (4X4) SE
Wrangler (4X4) Sahara
Wrangler (4X4) Renegade
XJ=Cherokee SE
Cherokee Sport
Cherokee Country
ZJ=Grand Cherokee SE
Grand Cherokee Laredo
Grand Cherolee Limited
ZG=Grand Cherokee European
Y1=Wrangler
X1=Cherokee
Z1=Grand Cherokee
KDX=Vehicles

AR = Use as Required - = Non Illustrated Part P.A.R. = Paint as Required

« RETURN TO GROUP INDEX

RECEIVER DRIER, CONDENSOR AND LINES 2.5L DIESEL ENGINE XJ BODY RHD
Figure 24-234

24-234

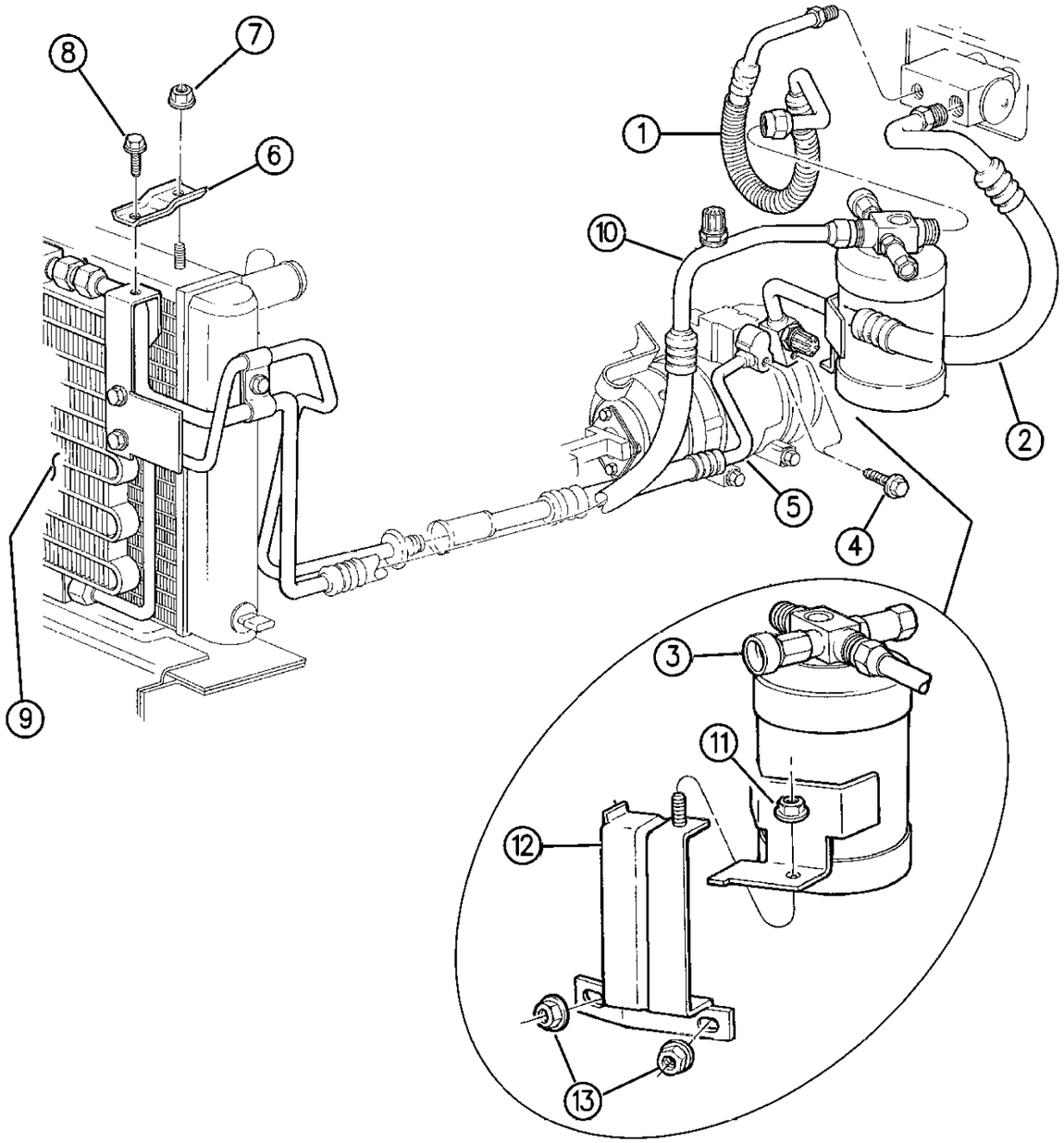

ITEM	PART NUMBER	QTY	BODY	MODEL	DESCRIPTION
1	5503 7234	1			LINE, Liquid
2	5503 6192	1			LINE, Suction
3	4797 002	1			DRIER, Receiver
4		1			SCREW (DNS)
5	5503 6148	1			LINE, Discharge
6	5600 2231	1			BRACKET
7	1150 2722	2			NUT
8	J400 7348	2			SCREW
9	5503 5999	1			CORE, Condensor
	5503 6113	1			LINE, Discharge
10	5503 6964	1			LINE, Liquid Condensor to Drier
	5600 1227	1			VALVE, Releif
11	3420 1711	1			NUT
12	5503 6900	1			BRACKET
13	3420 1416	1			NUT
					O-RING
	4741 705	2			Discharge Line
	4761 825	2			Suction Line

MODEL CODES:

72=2 DR Wagon
74=4 DR Wagon
77=Open Body 93" Whlbase
78=Open Body 103" Whlbase - Export
T=2WD
J,N=4WD
U=4WD (RHD)

BODY STYLES:

YJ=Wrangler (4X4) "S"
Weangler (4X4) SE
Wrangler (4X4) Sahara
Wrangler (4X4) Renegade
XJ=Cherokee SE
Cherokee Sport
Cherokee Country
ZJ=Grand Cherokee SE
Grand Cherokee Laredo
Grand Cherolee Limited
ZG=Grand Cherokee European
Y1=Wrangler
X1=Cherokee
Z1=Grand Cherokee
KDX=Vehicles

AR = Use as Required - = Non Illustrated Part P.A.R. = Paint as Required

« RETURN TO GROUP INDEX

HOSES, HEATER 2.5L GAS AND DIESEL ENGINES XJ BODY
Figure 24-235

24-235

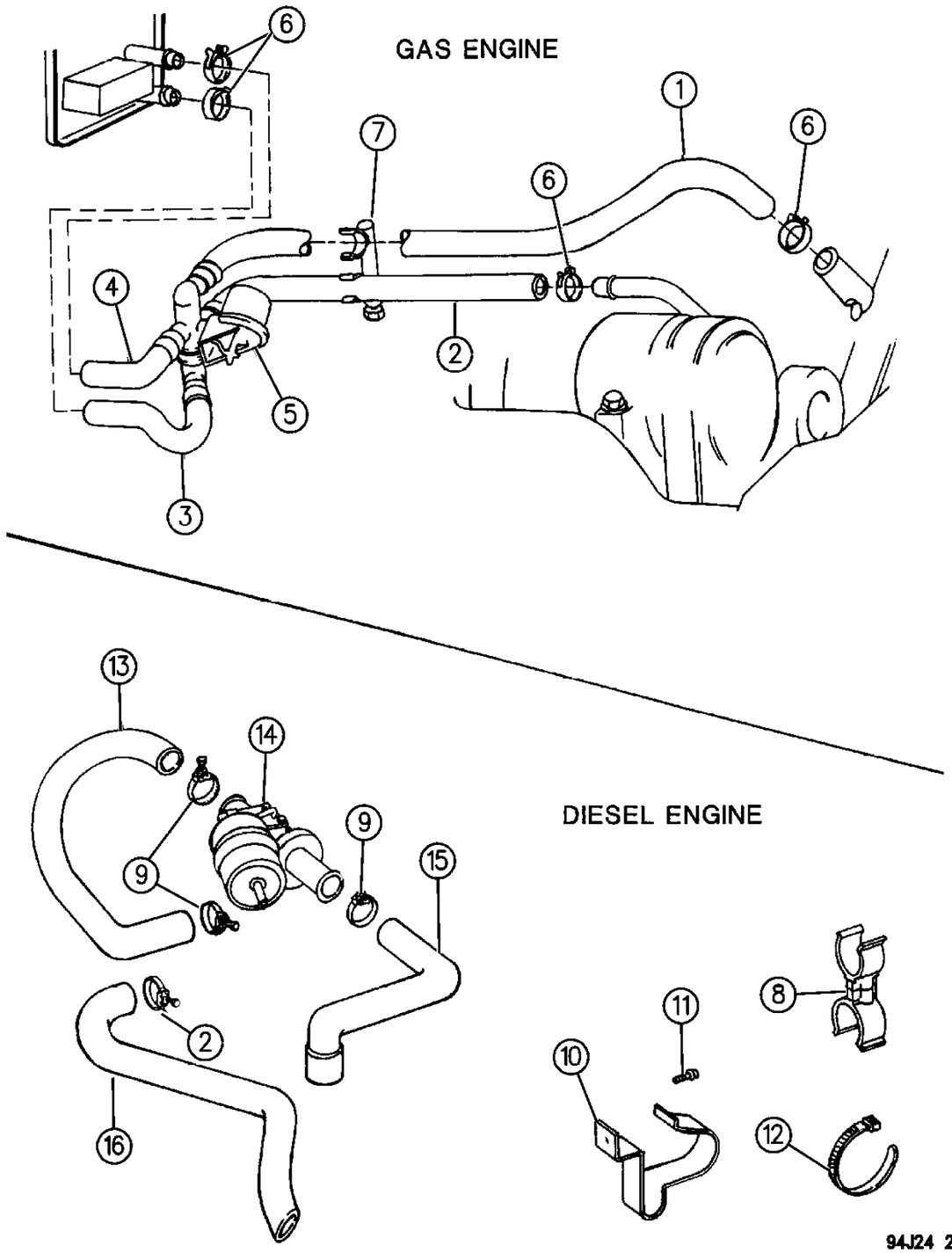

ITEM	PART NUMBER	QTY	BODY	MODEL	DESCRIPTION
1	5600 4786	1			HOSE AND SLEEVE ASSEMBLY, T/Stat to Water Valve ***
	5200 3840	1			CHINA
	5503 7290	1			Manifold to Water Pump, CHINA
	4637 938	1			SLEEVE
2	5600 4788	1			HOSE AND SLEEVE ASSEMBLY, Water Valve to Pump ***
	5503 5960	1			CHINA
3	5600 4784	1			HOSE, Water Valve to Heater Core
	5503 7933	1			RHD, 1994-95
	5503 6953	1			RHD, 1996
4	5600 4787	1			HOSE, Core to Water Valve, Return
	5200 3887	1			CHINA
	5503 6235	1			RHD
	5503 6956	1			RHD, 1996
5	5600 5900	1			VALVE, Water
	5600 2522	1			Vacuum Operated CHINA
6					CLAMP
	6502 017	AR			25.2 - 28.9mm
	6502 018	AR			22.0 - 26.0 mm
7	3300 1640	1			BRACKET, Hose Support
8	5200 1603	1			CLIP
9	J320 3076	AR			CLAMP, Hose
10	5600 0712	1			BRACKET
11	3420 1489	1			SCREW
12	J322 3227	AR			STRAP
13					HOSE, Heater Supply
	5600 1265	1			1994, 2.1L Diesel
	5503 7187	1			1995 2.5L Diesel RHD (Rubber)
	5503 7277	1			1996 2.5L Diesel RHD (Metal)
	5503 7096	1			1995-96, 2.5L Diesel LHD
14	J322 2290	1			VALVE, Heater
15					HOSE, Core to Pump
	5600 1227	1			1994, 2.1L Diesel
16					HOSE, Return
	5600 1696	1			1994, 2.1L Diesel
	5503 6689	1			1995-96 2.5L Diesel Engine LHD
	5503 6137	1			1995, 2.5L Diesel Engine RHD (Rubber)
	5503 7276	1			1996 2.5L Diesel Engine RHD (Metal)
	4637 938	1			SLEEVE, Hose

MODEL CODES:

72=2 DR Wagon
74=4 DR Wagon
77=Open Body 93" Whlbase
78=Open Body 103" Whlbase - Export
T=2WD
J,N=4WD
U=4WD (RHD)

BODY STYLES:

YJ=Wrangler (4X4) "S"
Weangler (4X4) SE
Wrangler (4X4) Sahara
Wrangler (4X4) Renegade
XJ=Cherokee SE
Cherokee Sport
Cherokee Country
ZJ=Grand Cherokee SE
Grand Cherokee Laredo
Grand Cherolee Limited
ZG=Grand Cherokee European
Y1=Wrangler
X1=Cherokee
Z1=Grand Cherokee
KDX=Vehicles

AR = Use as Required - = Non Illustrated Part P.A.R. = Paint as Required

« RETURN TO GROUP INDEX

HOSES, HEATER 4.0L ENGINE ZJ, ZG BODY
Figure 24-240

24-240

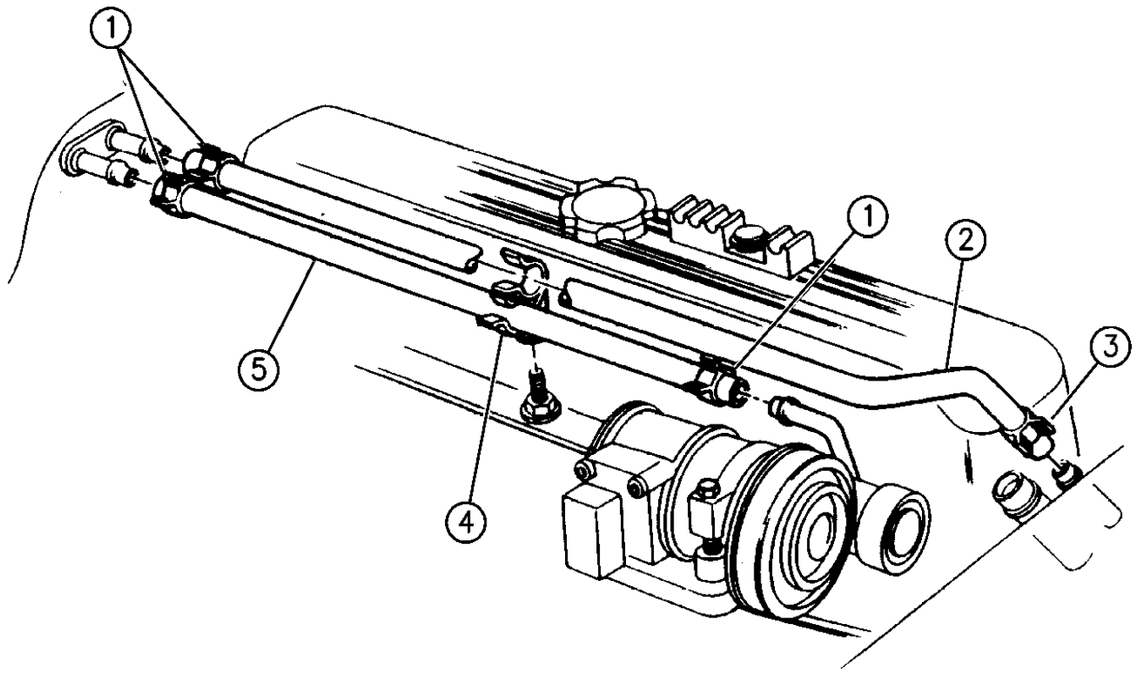

ITEM	PART NUMBER	QTY	BODY	MODEL	DESCRIPTION
1	6502 017	AR			CLAMP
2					HOSE, Supply
	5503 6145	1			1994
	5503 6490	1			1995-96
	5305 4204	1			RHD
3	6502 018	1			CLAMP
4	5503 5933	1			BRACKET, Hose Retaining
5	5503 6144	1			HOSE, Return
	5305 4208	1			RHD

MODEL CODES:

72=2 DR Wagon
74=4 DR Wagon
77=Open Body 93" Whlbase
78=Open Body 103" Whlbase - Export
T=2WD
J,N=4WD
U=4WD (RHD)

BODY STYLES:

YJ=Wrangler (4X4) "S"
Weangler (4X4) SE
Wrangler (4X4) Sahara
Wrangler (4X4) Renegade
XJ=Cherokee SE
Cherokee Sport
Cherokee Country
ZJ=Grand Cherokee SE
Grand Cherokee Laredo
Grand Cherolee Limited
ZG=Grand Cherokee European
Y1=Wrangler
X1=Cherokee
Z1=Grand Cherokee
KDX=Vehicles

AR = Use as Required - = Non Illustrated Part P.A.R. = Paint as Required

« RETURN TO GROUP INDEX

HOSES, HEATER 5.2L ENGINE ZJ, ZG BODY
Figure 24-245

24-245D

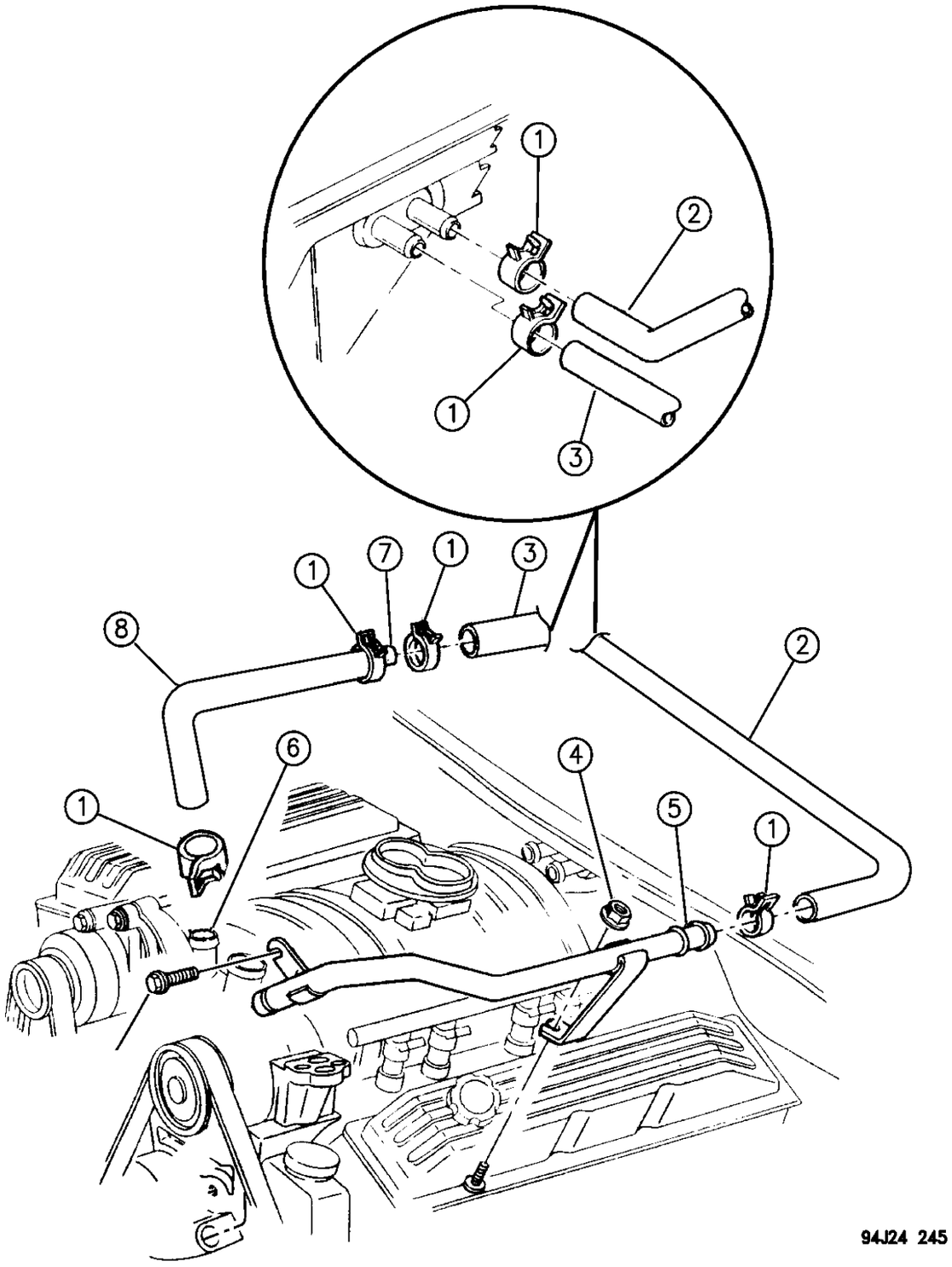

ITEM	PART NUMBER	QTY	BODY	MODEL	DESCRIPTION
1	6502 017	4			CLAMP
2	5503 6477	1			HOSE, Heater Return
3	5503 6476	1			HOSE, Heater Supply
	4637 938	1			SLEEVE, Heater Hose, Braided
	6034 677	1			CLIP
4	6033 560	1			NUT
5					TUBE, Heater Return
	5503 6159	1			1994-95
	5503 6895	1			1996
6	4746 864	1			O-RING, Tube to Water Pump
7	4361 121	1			TUBE, Insert
8	5503 6089	1			HOSE, Supply
	5503 5944	1			NIPPLE, Water Return
	5503 5876	1			SPACER, Return Tube

MODEL CODES:

72=2 DR Wagon
74=4 DR Wagon
77=Open Body 93" Whlbase
78=Open Body 103" Whlbase - Export
T=2WD
J,N=4WD
U=4WD (RHD)

BODY STYLES:

YJ=Wrangler (4X4) "S"
Weangler (4X4) SE
Wrangler (4X4) Sahara
Wrangler (4X4) Renegade
XJ=Cherokee SE
Cherokee Sport
Cherokee Country
ZJ=Grand Cherokee SE
Grand Cherokee Laredo
Grand Cherolee Limited
ZG=Grand Cherokee European
Y1=Wrangler
X1=Cherokee
Z1=Grand Cherokee
KDX=Vehicles

AR = Use as Required - = Non Illustrated Part P.A.R. = Paint as Required

« RETURN TO GROUP INDEX

HOSES, HEATER 2.5L DIESEL ZJ, ZG BODY
Figure 24-247

24-247

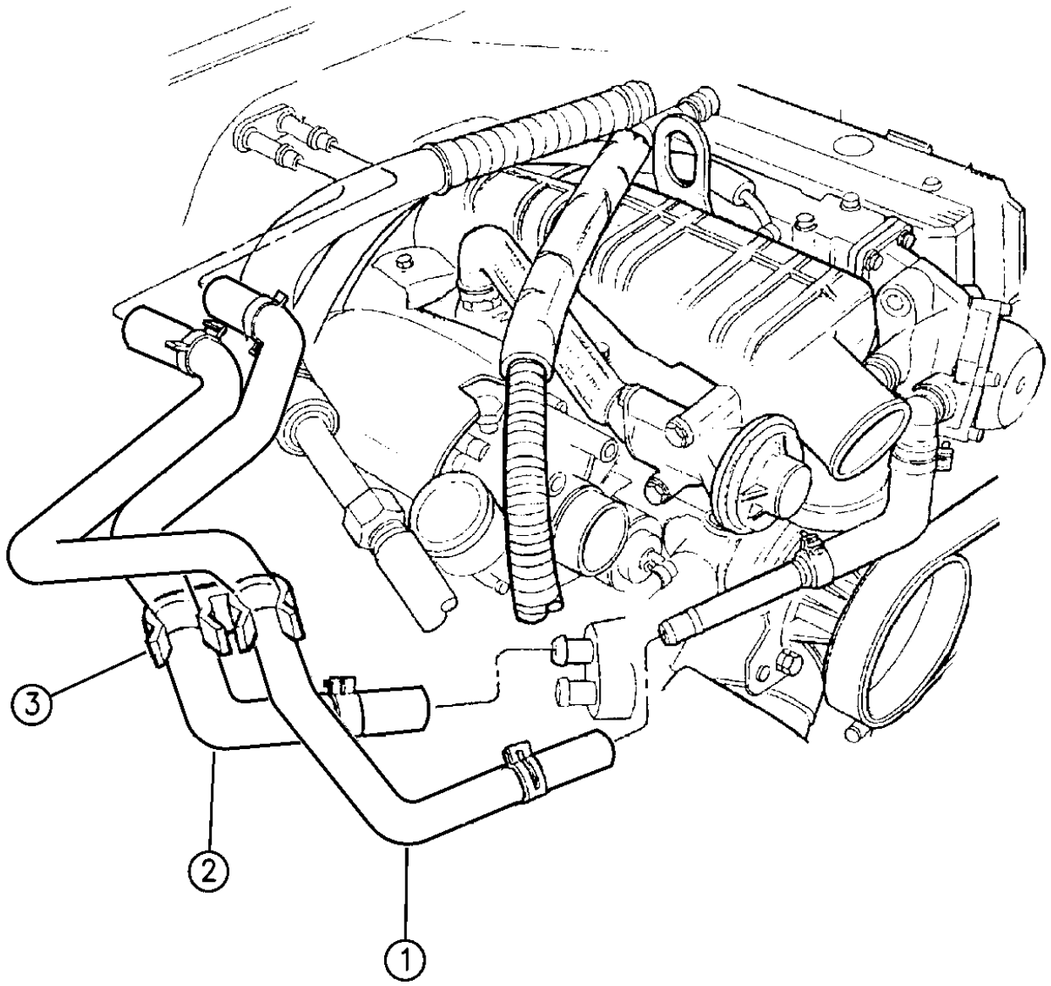

94J24 247

ITEM	PART NUMBER	QTY	BODY	MODEL	DESCRIPTION
1	5503 6786	1			HOSE, Heater Supply
	5305 4109	1			RHD
2	5503 6787	1			HOSE, Heater Return
	5305 4155	1	ZG		RHD
	5305 4475	1			Lower to Engine, RHD
	5305 4444	1			BRACKET, Heater Return Hose Wiring Harness, RHD
	5305 4415	1	ZG		TUBE, Return, RHD
	5300 7978	1			w/Pump Heater Return
					BRACKET, Tube RHD
	5305 4459	1			Return Tube, Lower
	5305 4471	1			Left
	5305 4472	1			Right
3	6502 017	2			CLAMP, Hose
	5264 146	2			SLEEVE, Hose

MODEL CODES:

72=2 DR Wagon
74=4 DR Wagon
77=Open Body 93" Whlbase
78=Open Body 103" Whlbase - Export
T=2WD
J,N=4WD
U=4WD (RHD)

BODY STYLES:

YJ=Wrangler (4X4) "S"
Weangler (4X4) SE
Wrangler (4X4) Sahara
Wrangler (4X4) Renegade
XJ=Cherokee SE
Cherokee Sport
Cherokee Country
ZJ=Grand Cherokee SE
Grand Cherokee Laredo
Grand Cherolee Limited
ZG=Grand Cherokee European
Y1=Wrangler
X1=Cherokee
Z1=Grand Cherokee
KDX=Vehicles

AR = Use as Required - = Non Illustrated Part P.A.R. = Paint as Required

ACCUMULATOR, CONDENSOR AND LINES 4.0L ENGINE ZJ, ZG BODY
Figure 24-250

24-250

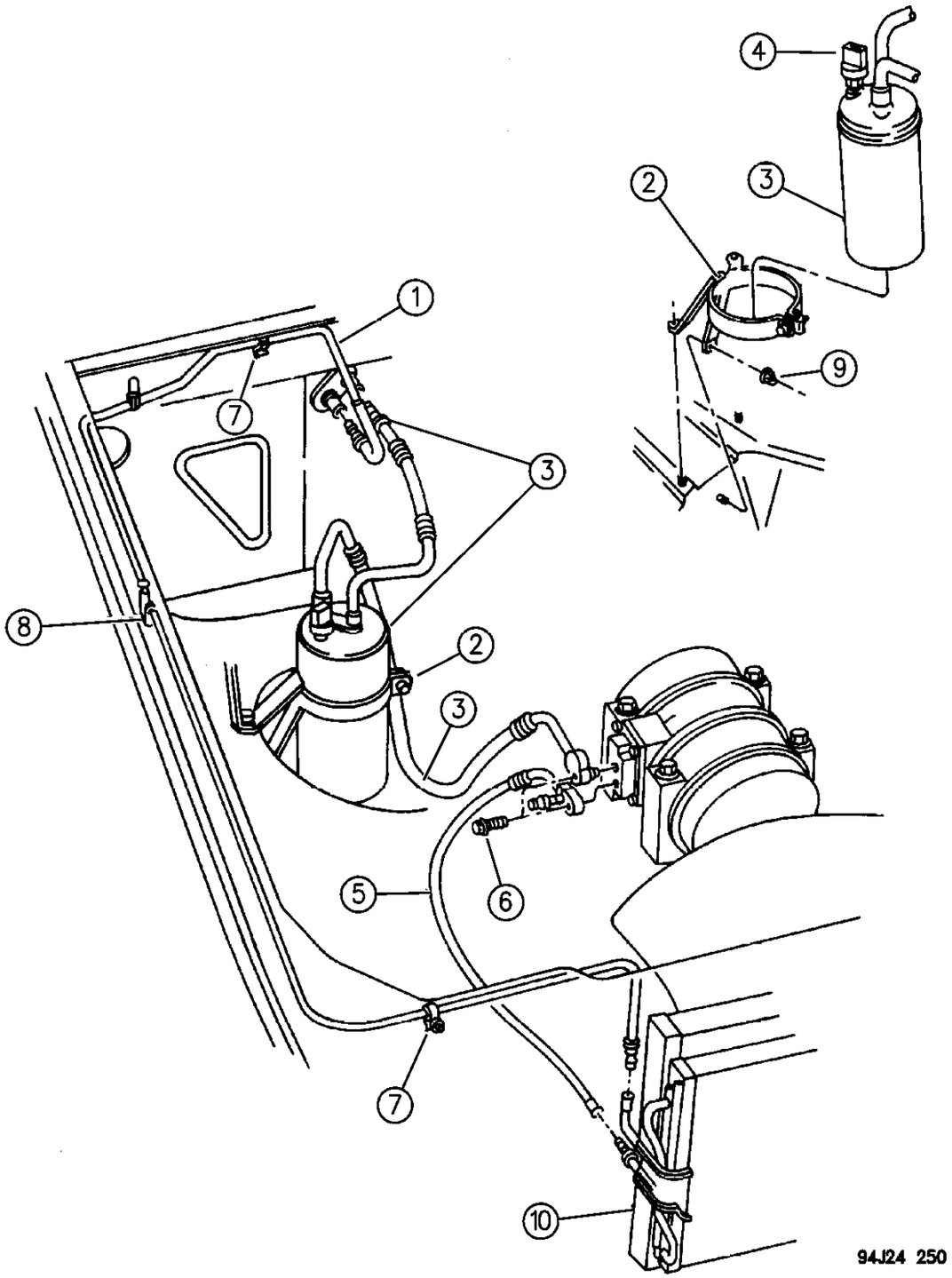

ITEM	PART NUMBER	QTY	BODY	MODEL	DESCRIPTION
1	5503 6178	1			LINE, Liquid
	5305 4213	1	ZG		RHD
	4740 400	1			O-RING, Accumulator Suction Line to Compressor
	4728 856	AR			SPRING, Quick Connect
	4741 705	4			O-RING, Liquid Line to Evaporator and Condenser
	4713 571	1			PORT, Charging ***
	5503 5972	1			CAP, Charge Port
	4728 951	1			O-RING, Charging Port
2	5503 5741	1			BRACKET, Accum. Assembly
3					ACCUMULATOR, w/Hoses ***
	5503 6478	1			LHD
	5305 4478	1	ZG		RHD
-	5503 6152	1			Bottle, Accumulator ***
	5305 4380	1	ZG		TUBE, w/Hose Compressor to Accumulator RHD
	4740 401	2			O-RING, Accumulator Hose to Evaporator
4	4713 511	1			SWITCH, A/C Cycling
	4741 724	1			O-RING, Cycling Switch
5					LINE, Discharge
	5503 6195	1			1994
	5503 6606	1			1995-96
	5305 4212	1	ZG		RHD
	3849 468	1			VALVE, Check, Discharge Line
					CLIP, Quick Disconnect
	4596 152	3			Discharge Line
	4596 153	1			Suction Line
	4741 716	1			O-RING, to Compressor (Large)
	4728 363	1			O-RING, Discharge Line (Small)
		1			SWITCH, High Pressure Cut-Out
	4773 122				(Round Shaped Connector) R134A (Connector 4762468)
	4773 190				(Oval Shaped Connector)
	4728 808	1			O-RING, Switch
6	4723 477	2			BOLT, Line to Compressor
7					RETAINER
	5503 5757	2			1994
	5503 6495	2			1995-96
8	5503 5758	1			RETAINER, Liquid Line Mounting
9	6501 140	AR			NUT, Lock
10	5600 5016	1			CORE, Condensor
	5511 5874	1	ZG		
	5305 4211	1	ZG		RHD
	4762 280	1			MID-EAST
	4741 705	2			O-RING, Condenser to Discharge Line

MODEL CODES:

72=2 DR Wagon
74=4 DR Wagon
77=Open Body 93" Whlbase
78=Open Body 103" Whlbase - Export
T=2WD
J,N=4WD
U=4WD (RHD)

BODY STYLES:

YJ=Wrangler (4X4) "S"
Weangler (4X4) SE
Wrangler (4X4) Sahara
Wrangler (4X4) Renegade
XJ=Cherokee SE
Cherokee Sport
Cherokee Country
ZJ=Grand Cherokee SE
Grand Cherokee Laredo
Grand Cherolee Limited
ZG=Grand Cherokee European
Y1=Wrangler
X1=Cherokee
Z1=Grand Cherokee
KDX=Vehicles

AR = Use as Required - = Non Illustrated Part P.A.R. = Paint as Required

ACCUMULATOR, CONDENSOR AND LINES 4.0L ENGINE ZJ, ZG BODY
Figure 24-250

24-250

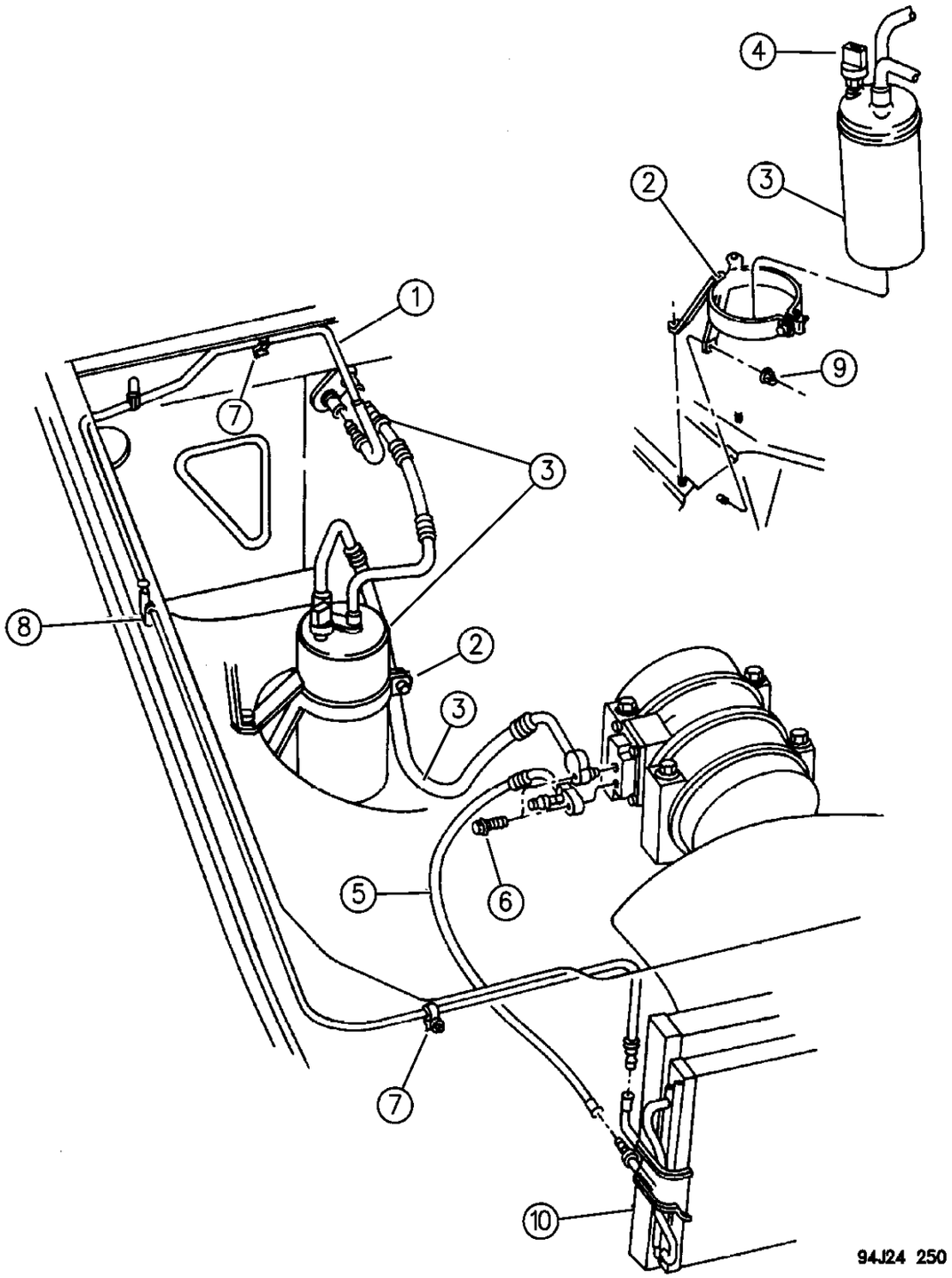

ITEM	PART NUMBER	QTY	BODY	MODEL	DESCRIPTION
	6101 719	2			SCREW, Condenser to Radiator
			ZG		CLIP, RHD
	5305 4404	1			Accumulator to P/S Pressure Line
	5305 4405	1			Discharge to Compressor Line
	5305 4458	1	ZG		Tube, w/Hose to Plenum RHD

MODEL CODES:

72=2 DR Wagon
74=4 DR Wagon
77=Open Body 93" Whlbase
78=Open Body 103" Whlbase - Export
T=2WD
J,N=4WD
U=4WD (RHD)

BODY STYLES:

YJ=Wrangler (4X4) "S"
Weangler (4X4) SE
Wrangler (4X4) Sahara
Wrangler (4X4) Renegade

XJ=Cherokee SE
Cherokee Sport
Cherokee Country

ZJ=Grand Cherokee SE
Grand Cherokee Laredo
Grand Cherolee Limited
ZG=Grand Cherokee European

Y1=Wrangler
X1=Cherokee
Z1=Grand Cherokee
KDX=Vehicles

AR = Use as Required - = Non Illustrated Part P.A.R. = Paint as Required

ACCUMULATOR, CONDENSOR AND LINES 5.2L ENGINE ZJ, ZG BODY
Figure 24-255

24-255

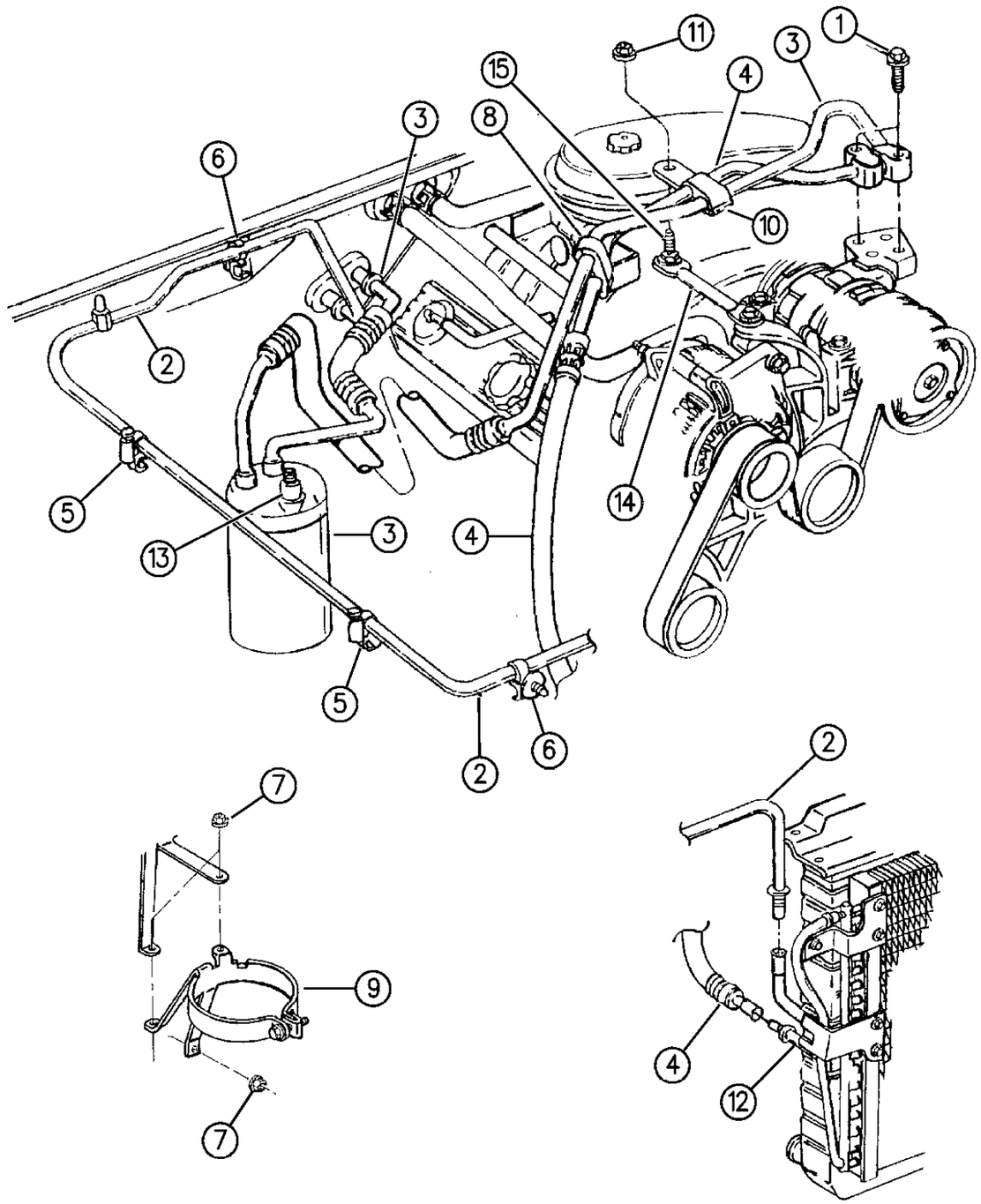

ITEM	PART NUMBER	QTY	BODY	MODEL	DESCRIPTION
1		2			SCREW (DNS)
2	5503 6178	1			LINE, A/C Liquid
	4728 856	1			SPRING, Quick Connect
	4728 766	4			O-RING, Liquid Line to Evaporator and Condenser
	4713 571	1			PORT, Charge ***
	5503 5972	1			CAP, Charge Port
	4728 951	1			O-RING, Charging Port
3	5503 6479	1			ACCUMULATOR, w/Hoses ***
					O-RING
	4740 400	1			Accumulator Suction Line to Compressor
	4740 401	2			Accumulator to Evap.
4	5600 5040	1			LINE, A/C Discharge
	4596 152	3			CLIP, Quick Disconnect, Discharge Line
	4596 153	1			CLIP, Quick Disconnect, Suction LIne
	3849 468	1			VALVE, Check, Discharge Line
	4741 716	1			O-RING, Discharge Line to Compressor
		1			SWITCH, High Pressure Cut-Out
	4773 122				(Round Shaped Connector) R134A
	4773 190				(Oval Shaped Connector)
	4728 808	1			O-RING, Cut-Out Switch
5	5503 5758	2			RETAINER, Liquid Line Mounting
6	5503 5757	2			RETAINER, Line Mounting
7	6100 515	3			NUT, Bracket Mounting
8	5503 5784	1			CLIP
9	5503 5741	1			BRACKET, Accumulator
10	5503 5945	1			CLIP, Hose to Manifold
11					NUT and WASHER (Not Serviced)
12	5600 5016	1			CONDENSER
	4728 766	2			O-RING, Condenser to Discharge Line (7/16 I.D.)
13	4713 511	1			SWITCH, Cycling
-	4741 724	1			O-RING, Switch
14	5300 8746	1			BRACE
15	6034 438	1			STUD

MODEL CODES:

72=2 DR Wagon
74=4 DR Wagon
77=Open Body 93" Whlbase
78=Open Body 103" Whlbase - Export
T=2WD
J,N=4WD
U=4WD (RHD)

BODY STYLES:

YJ=Wrangler (4X4) "S"
Weangler (4X4) SE
Wrangler (4X4) Sahara
Wrangler (4X4) Renegade
XJ=Cherokee SE
Cherokee Sport
Cherokee Country
ZJ=Grand Cherokee SE
Grand Cherokee Laredo
Grand Cherolee Limited
ZG=Grand Cherokee European
Y1=Wrangler
X1=Cherokee
Z1=Grand Cherokee
KDX=Vehicles

AR = Use as Required - = Non Illustrated Part P.A.R. = Paint as Required

« RETURN TO GROUP INDEX

ACCUMULATOR, CONDENSOR AND LINES 2.5L DIESEL ENGINE ZG BODY
Figure 24-257

24-257

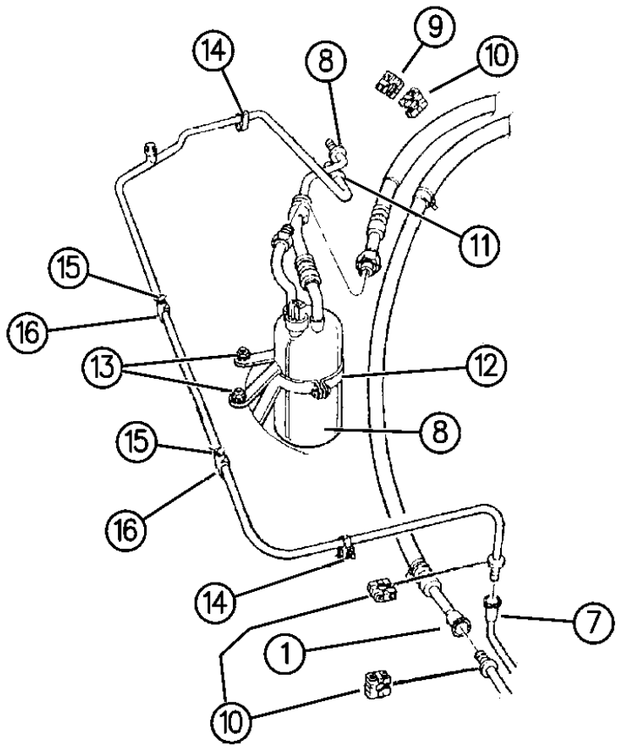

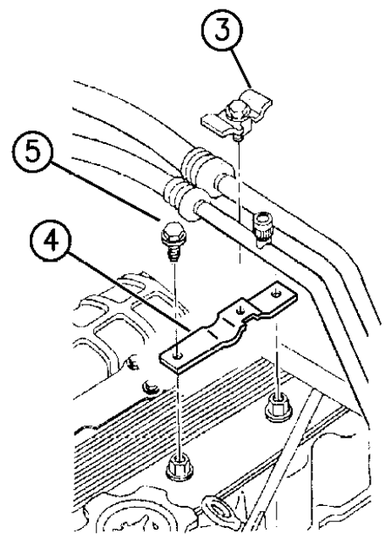

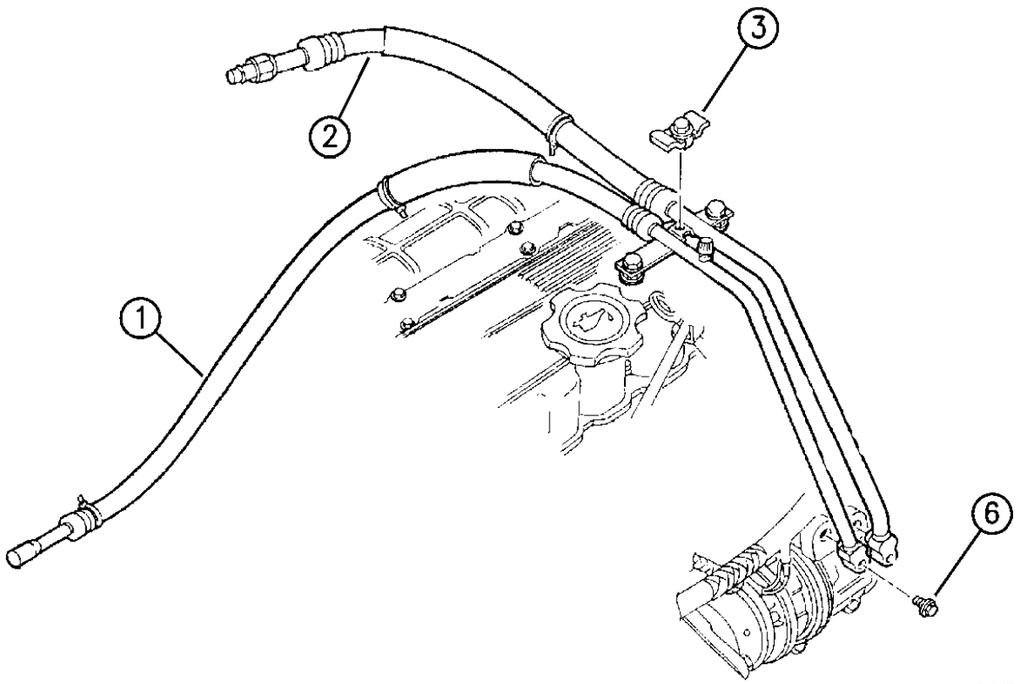

94J24 257

ITEM	PART NUMBER	QTY	BODY	MODEL	DESCRIPTION
1	5503 6850	1			LINE, Discharge
	5305 4214	1			RHD
	5305 4384	1			BRACKET, Line to Condensor, RHD
2	5503 6849	1			LINE, Suction
3	5511 5797	1			BRACKET, Upper Support
4	5511 5795	1			BRACKET, Lower Support
5		2			SCREW (DNS)
6		1			SCREW (DNS)
7	5503 6472	1			CONDENSOR, A/C ***
8	5503 6848	1			ACCUMULATOR, w/Hose ***
	5305 4529	1			RHD
9	4596 153	AR			CLIP
10	4596 152	3			CLIP
11	5503 6178	1			LINE, Liquid
	5305 4376	1			Front, RHD
	5305 4456	1			Rear, RHD
12	5511 5828	1			BRACKET, Accumulator
	5305 4386	1			RHD
13		3			NUT (DNS)
14	5503 6495	2			RETAINER, Liquid Line
15		2			SCREW (DNS)
16	5503 5758	2			RETAINER, Liquid Line
					CLIP, RHD
	5305 4404	1			Accumulator to P/S Pressure Lines
	5305 4405	1			P/S Lines to A/C Lines
	5305 4410	1			Discharge to Liquid Line

MODEL CODES:

72=2 DR Wagon
74=4 DR Wagon
77=Open Body 93" Whlbase
78=Open Body 103" Whlbase - Export
T=2WD
J,N=4WD
U=4WD (RHD)

BODY STYLES:

YJ=Wrangler (4X4) "S"
Weangler (4X4) SE
Wrangler (4X4) Sahara
Wrangler (4X4) Renegade
XJ=Cherokee SE
Cherokee Sport
Cherokee Country
ZJ=Grand Cherokee SE
Grand Cherokee Laredo
Grand Cherolee Limited
ZG=Grand Cherokee European
Y1=Wrangler
X1=Cherokee
Z1=Grand Cherokee
KDX=Vehicles

AR = Use as Required - = Non Illustrated Part P.A.R. = Paint as Required

« RETURN TO GROUP INDEX

CONTROLS, HEATER AND FRESH AIR YJ BODY
Figure 24-305

24-305

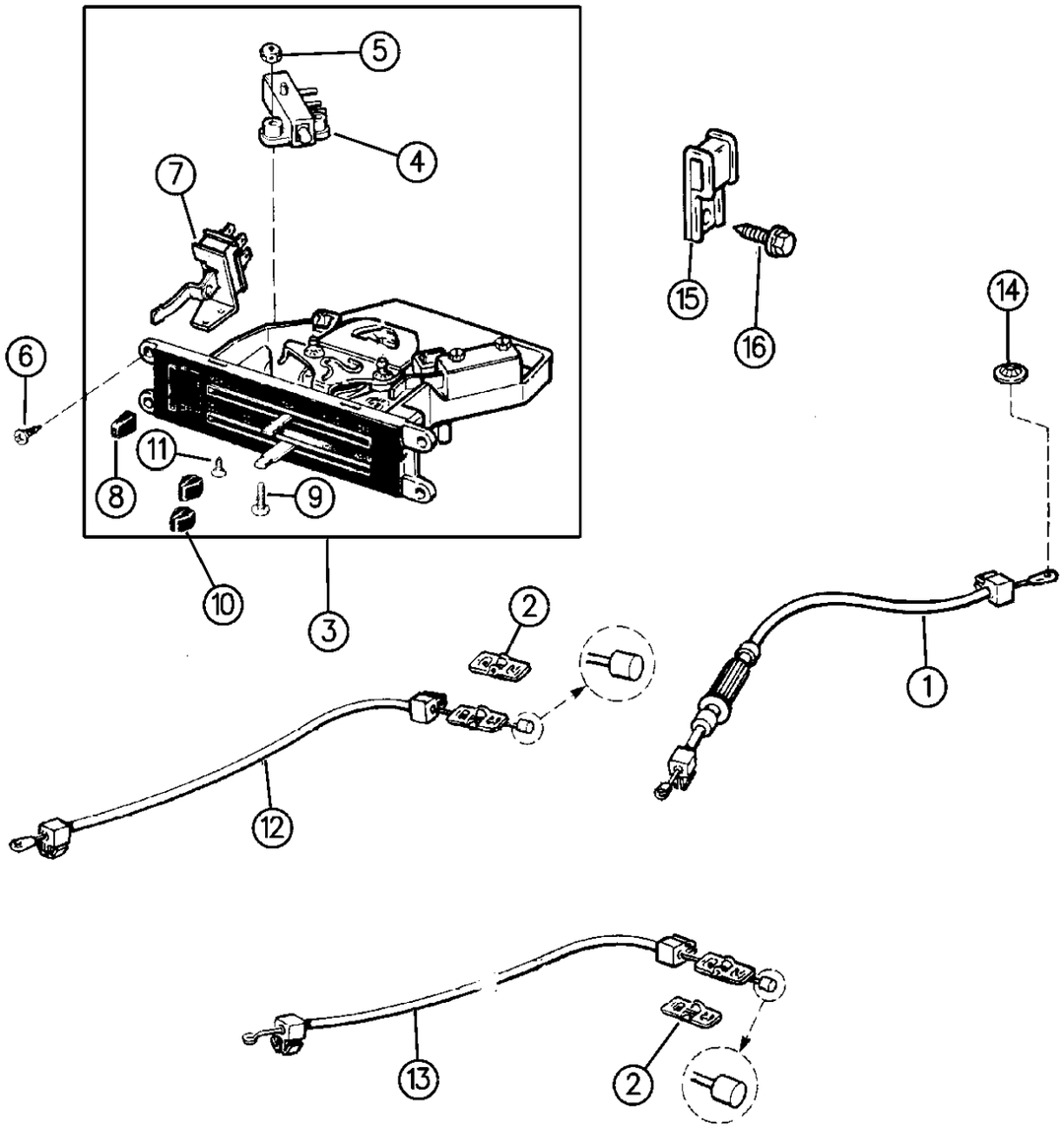

94J24 305

ITEM	PART NUMBER	QTY	BODY	MODEL	DESCRIPTION
1					CABLE, Air Vent
	5503 6904	1			Left Vent Control, 1994
	5503 7201	1			1995
	5503 6905	1			Right Vent Control
2	5600 2700	1			CLIP
3	5503 6371	1			CONTROL, Heater
4	J369 3112	1			SWITCH, Vacuum
5	J400 3625	2			NUT
6	J400 3671	4			SCREW
7		1			SWITCH, Heater
	8350 4250				(4 PRONG)
	J369 3111				(5 PRONG)
8	J322 2060	1			KNOB, Heater Blower Switch
9	J400 1267	2			SCREW
10	J322 2059	2			KNOB, Heater Control
11	J812 2837	2			SCREW
12	5503 6908	1			CABLE, Defroster Control
13	5600 2699	1			CABLE, Temperature Control
	J400 5751	2			NUT, Push-on, Control Cables
14	J400 1714	AR			NUT
15	J400 5669	1			CLAMP
16	J942 1073	1			SCREW

MODEL CODES:

72=2 DR Wagon
74=4 DR Wagon
77=Open Body 93" Whlbase
78=Open Body 103" Whlbase - Export
T=2WD
J,N=4WD
U=4WD (RHD)

BODY STYLES:

YJ=Wrangler (4X4) "S"
Weangler (4X4) SE
Wrangler (4X4) Sahara
Wrangler (4X4) Renegade

XJ=Cherokee SE
Cherokee Sport
Cherokee Country

ZJ=Grand Cherokee SE
Grand Cherokee Laredo
Grand Cherolee Limited
ZG=Grand Cherokee European

Y1=Wrangler
X1=Cherokee
Z1=Grand Cherokee
KDX=Vehicles

AR = Use as Required - = Non Illustrated Part P.A.R. = Paint as Required

« RETURN TO GROUP INDEX

CONTROLS, HEATER AND AIR CONDITIONING XJ BODY
Figure 24-310

24-310

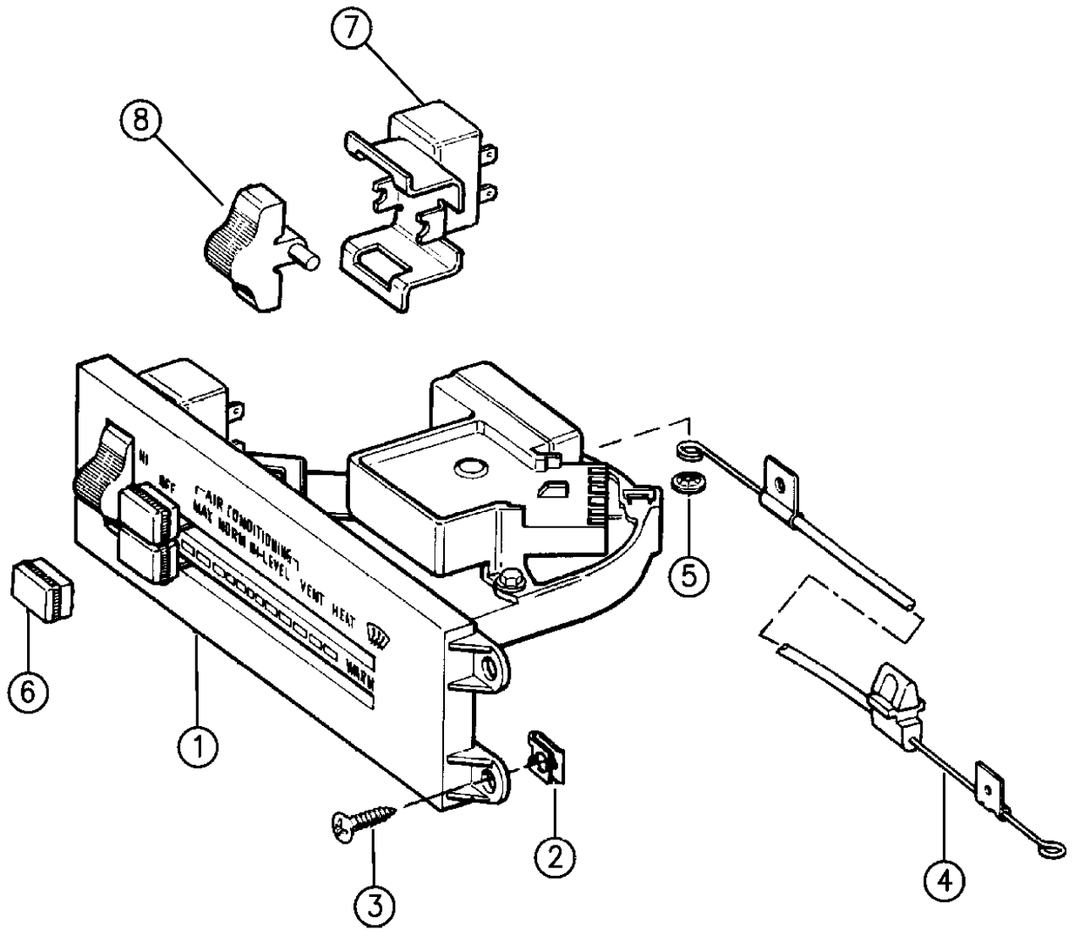

94J24 310

ITEM	PART NUMBER	QTY	BODY	MODEL	DESCRIPTION
1					CONTROL, Heater and A/C
	5503 5748	1			w/o Air Cond.
	5503 5749	1			w/Air Cond.
	5503 6004	1			RHD
2	J400 4223	4			NUT
3	J400 2461	4			SCREW
4	5503 5943	1			CABLE, w/Clip, Blend Air Door
	4798 737	1			LEVER, A/C Temp. Door (Bracket)
5	J400 6866	1			NUT
6	8350 2718	2			KNOB
7	8350 2719	1			SWITCH, Blower
8	8350 2721	1			WHEEL, Thumb

MODEL CODES:

72=2 DR Wagon
74=4 DR Wagon
77=Open Body 93" Whlbase
78=Open Body 103" Whlbase - Export
T=2WD
J,N=4WD
U=4WD (RHD)

BODY STYLES:

YJ=Wrangler (4X4) "S"
Weangler (4X4) SE
Wrangler (4X4) Sahara
Wrangler (4X4) Renegade

XJ=Cherokee SE
Cherokee Sport
Cherokee Country

ZJ=Grand Cherokee SE
Grand Cherokee Laredo
Grand Cherolee Limited
ZG=Grand Cherokee European

Y1=Wrangler
X1=Cherokee
Z1=Grand Cherokee
KDX=Vehicles

AR = Use as Required - = Non Illustrated Part P.A.R. = Paint as Required

« RETURN TO GROUP INDEX

CONTROL, HEATER ZJ, ZG BODY
Figure 24-320

24-320A

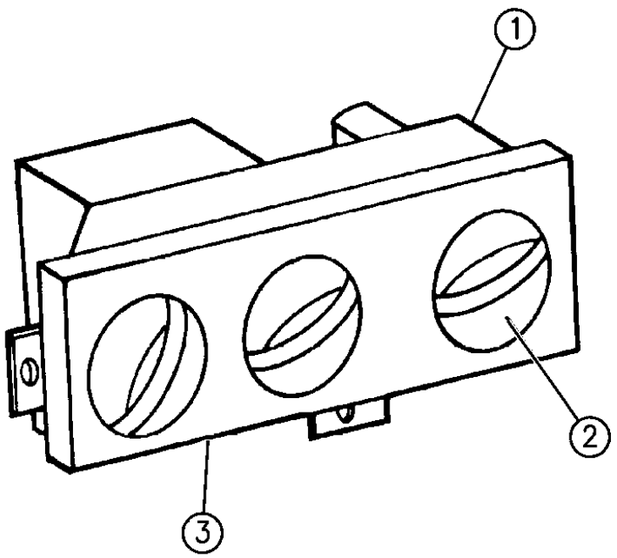

ITEM	PART NUMBER	QTY	BODY	MODEL	DESCRIPTION
1					CONTROL, Heater
	5503 5964	1			w/o ATC
	5503 6330	1			w/ATC, 1994
	5503 6400	1			w/ATC, 1995
	5503 6395	1			w/ATC, 1996
2	4720 841	3			KNOB
-	4883 337	1			w/ATC
3	4720 845	1			FACEPLATE ***
	4720 843	2			LAMP, Faceplate

MODEL CODES:

72=2 DR Wagon
74=4 DR Wagon
77=Open Body 93" Whlbase
78=Open Body 103" Whlbase - Export
T=2WD
J,N=4WD
U=4WD (RHD)

BODY STYLES:

YJ=Wrangler (4X4) "S"
Weangler (4X4) SE
Wrangler (4X4) Sahara
Wrangler (4X4) Renegade
XJ=Cherokee SE
Cherokee Sport
Cherokee Country
ZJ=Grand Cherokee SE
Grand Cherokee Laredo
Grand Cherolee Limited
ZG=Grand Cherokee European
Y1=Wrangler
X1=Cherokee
Z1=Grand Cherokee
KDX=Vehicles

94J24 320

AR = Use as Required - = Non Illustrated Part P.A.R. = Paint as Required

CONTROL, AIR CONDITIONING ZJ, ZG BODY
Figure 24-330

24-330A

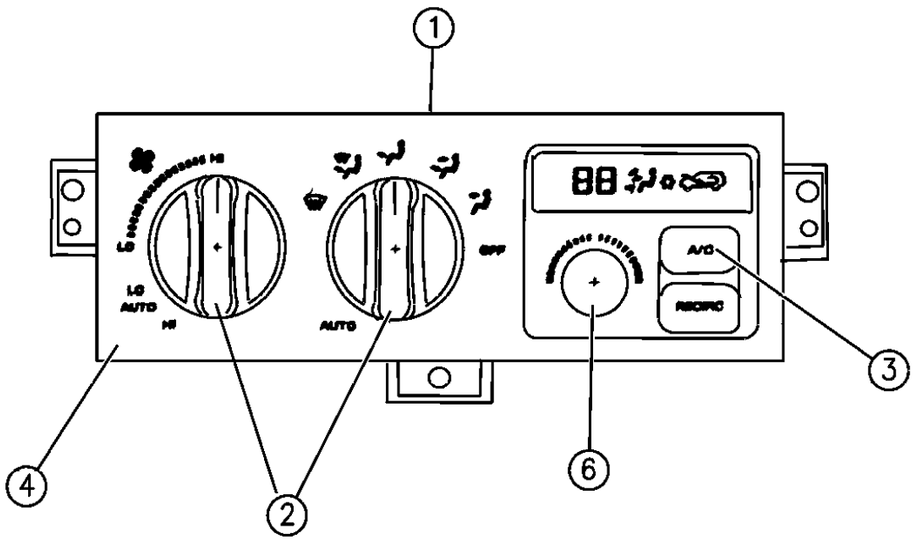

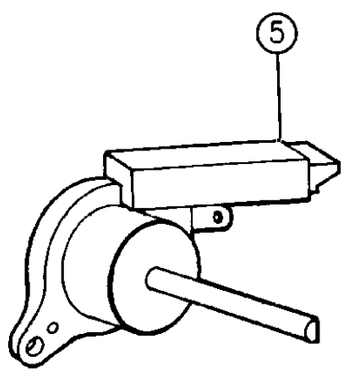

ITEM	PART NUMBER	QTY	BODY	MODEL	DESCRIPTION
1					CONTROL, A/C, w/Vac. Harness Lead
	5503 5964	1			w/o ATC
	5511 5842	1	ZG		w/o ATC
	5503 6330	1			w/ATC, 1994
	5503 6400	1			w/ATC, 1995
	5503 6395	1			w/ATC, 1996
	5511 6065	1	ZG		w/ATC
					SENSOR, Ambient
	5600 5557	1			1994-95
	5503 6393	1			1996
					HOSE, Aspirator
	5503 6407	1			1994-95
	5503 6394	1			1996
2	4761 171	AR			KNOB, w/ATC
	4720 841	AR			w/o ATC
3	4720 676	1			BUTTON, A/C
4		1			FACEPLATE, A/C (Serv. in Control) ***
	4720 842	1			LAMP, A/C Button, Bulb and Socket
	4720 843	2			LAMP, Faceplate, Bulb and Socket
5		1			VALVE, Rotary Vacumn (Serv. In Control)
					SUPPORT, Control, Rear
	5503 5918	1			1994-95
	5503 6396	1			1996
6		1			KNOB, Serviced in Assembly

MODEL CODES:

72=2 DR Wagon
74=4 DR Wagon
77=Open Body 93" Whlbase
78=Open Body 103" Whlbase - Export
T=2WD
J,N=4WD
U=4WD (RHD)

BODY STYLES:

YJ=Wrangler (4X4) "S"
Weangler (4X4) SE
Wrangler (4X4) Sahara
Wrangler (4X4) Renegade
XJ=Cherokee SE
Cherokee Sport
Cherokee Country
ZJ=Grand Cherokee SE
Grand Cherokee Laredo
Grand Cherolee Limited
ZG=Grand Cherokee European
Y1=Wrangler
X1=Cherokee
Z1=Grand Cherokee
KDX=Vehicles

94J24 330

AR = Use as Required - = Non Illustrated Part P.A.R. = Paint as Required

« RETURN TO GROUP INDEX

COMPRESSOR, AIR CONDITIONING YJ BODY
Figure 24-405

24-405

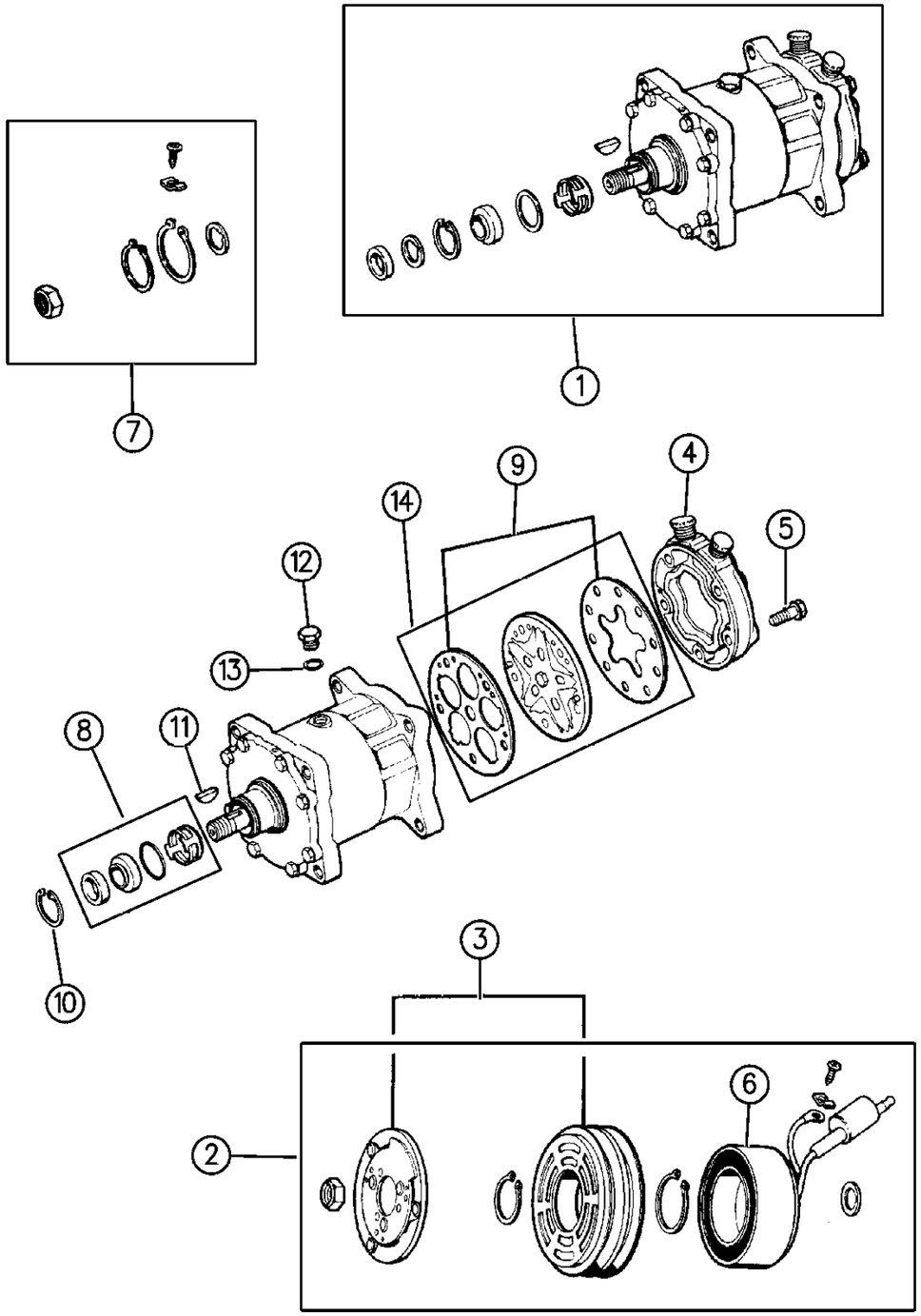

ITEM	PART NUMBER	QTY	BODY	MODEL	DESCRIPTION
1					COMPRESSOR
	4637 171	1			R12
	4762 972	1			R134A
	5503 6697	1			COMPRESSOR, w/Clutch
2					CLUTCH
	4673 173	1			R12
	4762 973	1			R134A
	4882 003	1			w/Pressed Ring
3	4637 174	1			PULLEY, Drive
4	4637 172	1			HEAD, Cylinder
	8350 6000	1			BOLT, Cylinder Head
5	4637 157	5			SCREW
6	4637 175	1			COIL, Clutch
7	8350 4885	1			PACKAGE, Clutch
8	4637 176	1			PACKAGE, Front Seal, w/Felt Ring
9	4637 154	1			PACKAGE, Gasket
10	4637 141	1			RING, Snap
11	J813 3191	1			KEY, Shaft
12	4637 156	1			PLUG, Filler
13	J813 3184	1			O-RING
14	J813 3187	1			PACKAGE, Plate

MODEL CODES:

72=2 DR Wagon
74=4 DR Wagon
77=Open Body 93" Whlbase
78=Open Body 103" Whlbase - Export
T=2WD
J,N=4WD
U=4WD (RHD)

BODY STYLES:

YJ=Wrangler (4X4) "S"
Weangler (4X4) SE
Wrangler (4X4) Sahara
Wrangler (4X4) Renegade

XJ=Cherokee SE
Cherokee Sport
Cherokee Country

ZJ=Grand Cherokee SE
Grand Cherokee Laredo
Grand Cherolee Limited
ZG=Grand Cherokee European

Y1=Wrangler
X1=Cherokee
Z1=Grand Cherokee
KDX=Vehicles

AR = Use as Required - = Non Illustrated Part P.A.R. = Paint as Required

« RETURN TO GROUP INDEX

COMPRESSOR, AIR CONDITIONING EXCEPT 2.5L DIESEL ENGINE XJ BODY
Figure 24-410

24-410

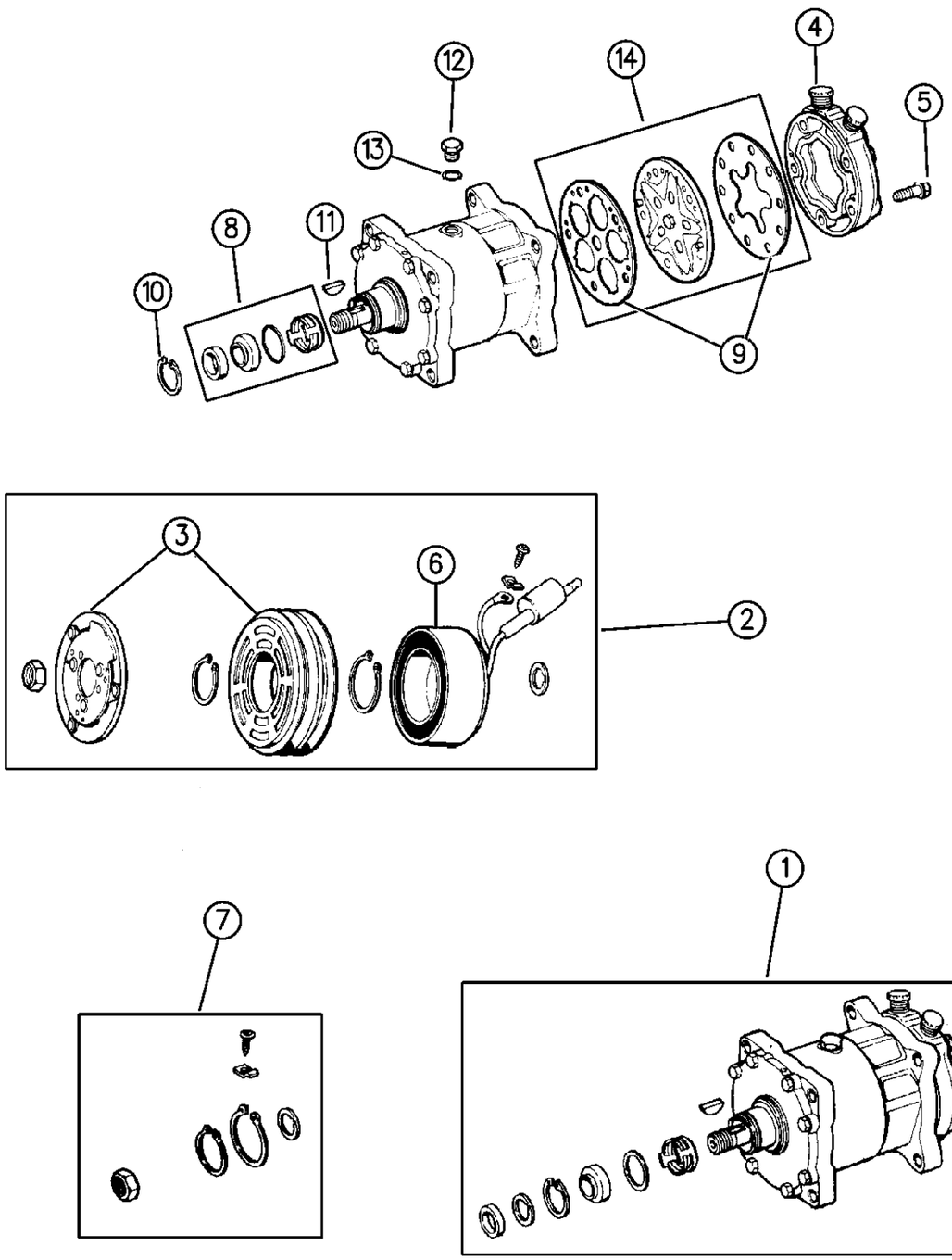

ITEM	PART NUMBER	QTY	BODY	MODEL	DESCRIPTION
1	5503 7359	1			COMPRESSOR, 2.5L/4.0L Engine
	5503 7079	1			4.0L Engine RHD
	4762 941	1			PACKAGE, O-Ring, Up to 94 1/2
	4798 258				2.1L Diesel Engine, V Drive Style Pulley
	4762 941	1			PACKAGE, Suction/Discharge Port Seal
	4761 737	1			SEAL, Suction and Discharge Line at Compressor
	5503 5680	1			MANIFOLD, A/C Suction & Discharge (Up to 941/2) RHD ***
					Serviced in Compressor, After 94 1/2 ***
2		1			CLUTCH, Compressor
	4773 987	1			Up to 941/2
	4762 973				w/o Pressed Ring, After 94 1/2
	4882 003	1			w/Pressed Ring, After 94 1/2
3	4637 174	1			PULLEY, Clutch Drive
	J813 4177	1			Diesel Engine
4	4637 172	1			HEAD, Cylinder, w/Gasket
	4637 104	1			2.1L Diesel Engine
5	4637 157	6			SCREW, Cylinder Head
	J813 3189	1			2.1L Diesel Engine
6	4637 175	1			COIL, Clutch
	8351 0032	1			2.1L Diesel Engine
7	8350 4885	1			PACKAGE, Clutch
	J813 3192	1			2.1L Diesel Engine
8	4637 176	1			PACKAGE, Front Seal, w/Felt Ring
	J813 3183	1			2.1L Diesel Engine
9	4637 154	1			PACKAGE, Gasket
	4637 107	1			2.1L Diesel Engine
10	4637 141	1			RING, Snap
	J813 3182	1			2.1L Diesel Engine
11	J813 3191	1			KEY, Shaft
12	4637 156	1			PLUG, Filler
	J813 3185	1			PLUG, Oil Drain
13	J813 3184	1			O-RING
14	4637 134	1			PACKAGE, Plate

MODEL CODES:

72=2 DR Wagon
74=4 DR Wagon
77=Open Body 93" Whlbase
78=Open Body 103" Whlbase - Export
T=2WD
J,N=4WD
U=4WD (RHD)

BODY STYLES:

YJ=Wrangler (4X4) "S"
Weangler (4X4) SE
Wrangler (4X4) Sahara
Wrangler (4X4) Renegade

XJ=Cherokee SE
Cherokee Sport
Cherokee Country

ZJ=Grand Cherokee SE
Grand Cherokee Laredo
Grand Cherolee Limited
ZG=Grand Cherokee European

Y1=Wrangler
X1=Cherokee
Z1=Grand Cherokee
KDX=Vehicles

AR = Use as Required - = Non Illustrated Part P.A.R. = Paint as Required

COMPRESSOR, AIR CONDITIONING 2.5L DIESEL ENGINE XJ BODY
Figure 24-415

24-415

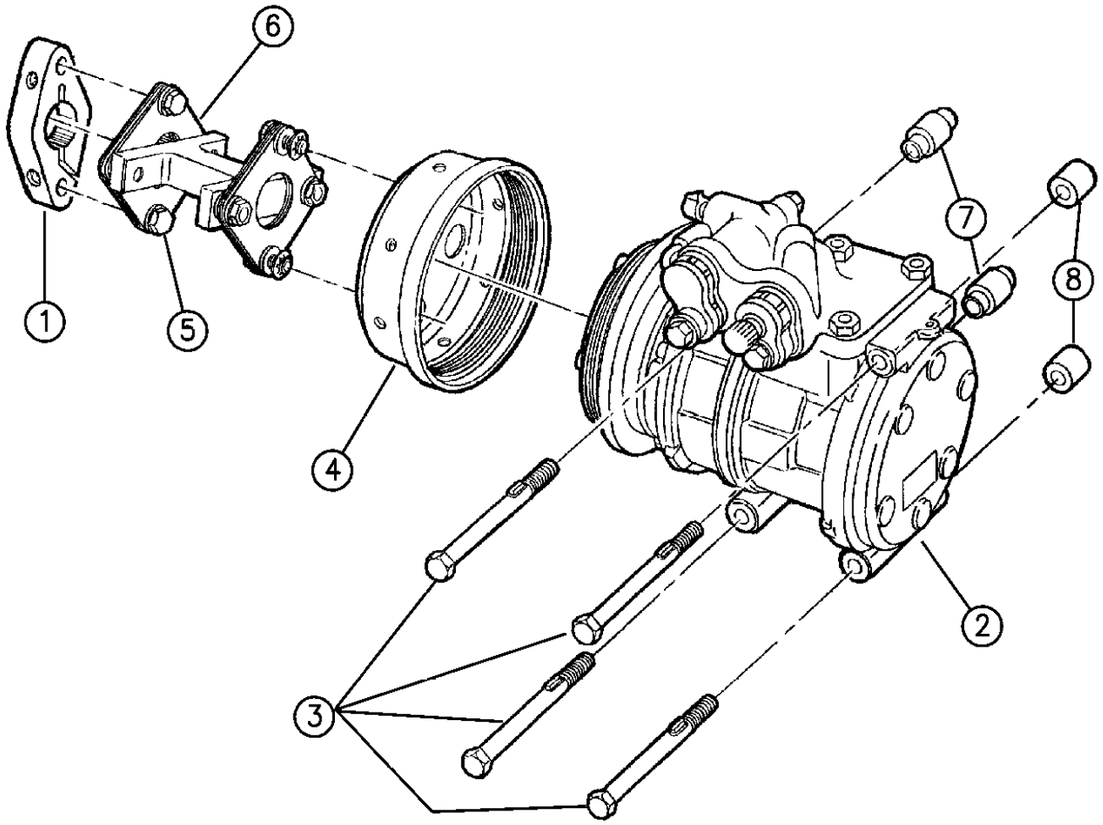

ITEM	PART NUMBER	QTY	BODY	MODEL	DESCRIPTION
1					FLANGE, Drive ***
	4797 721	1			P/S Pump
	4864 600	1			Compressor
2	5503 6412	1			COMPRESSOR, w/Clutch
	4778 589	1			PACKAGE, Magnetic Clutch Overhaul
	4778 588	1			COIL, Stator
	4778 587	1			PACKAGE, Pulley Hub
3	6503 802	4			BOLT, Mtg.
4	4797 754	1			CUP, Drive ***
5		1			SCREW, Serviced in Flex Drive
6	4797 720	1			DRIVE, Flex ***
7	5503 6677	2			SPACER, Front
8	5503 6678	2			SPACER, Rear

MODEL CODES:

72=2 DR Wagon
74=4 DR Wagon
77=Open Body 93" Whlbase
78=Open Body 103" Whlbase - Export
T=2WD
J,N=4WD
U=4WD (RHD)

BODY STYLES:

YJ=Wrangler (4X4) "S"
Weangler (4X4) SE
Wrangler (4X4) Sahara
Wrangler (4X4) Renegade
XJ=Cherokee SE
Cherokee Sport
Cherokee Country
ZJ=Grand Cherokee SE
Grand Cherokee Laredo
Grand Cherolee Limited
ZG=Grand Cherokee European
Y1=Wrangler
X1=Cherokee
Z1=Grand Cherokee
KDX=Vehicles

94J24 415

AR = Use as Required - = Non Illustrated Part P.A.R. = Paint as Required

« RETURN TO GROUP INDEX

COMPRESSOR, AIR CONDITIONING ZJ, ZG BODY
Figure 24-420

24-420

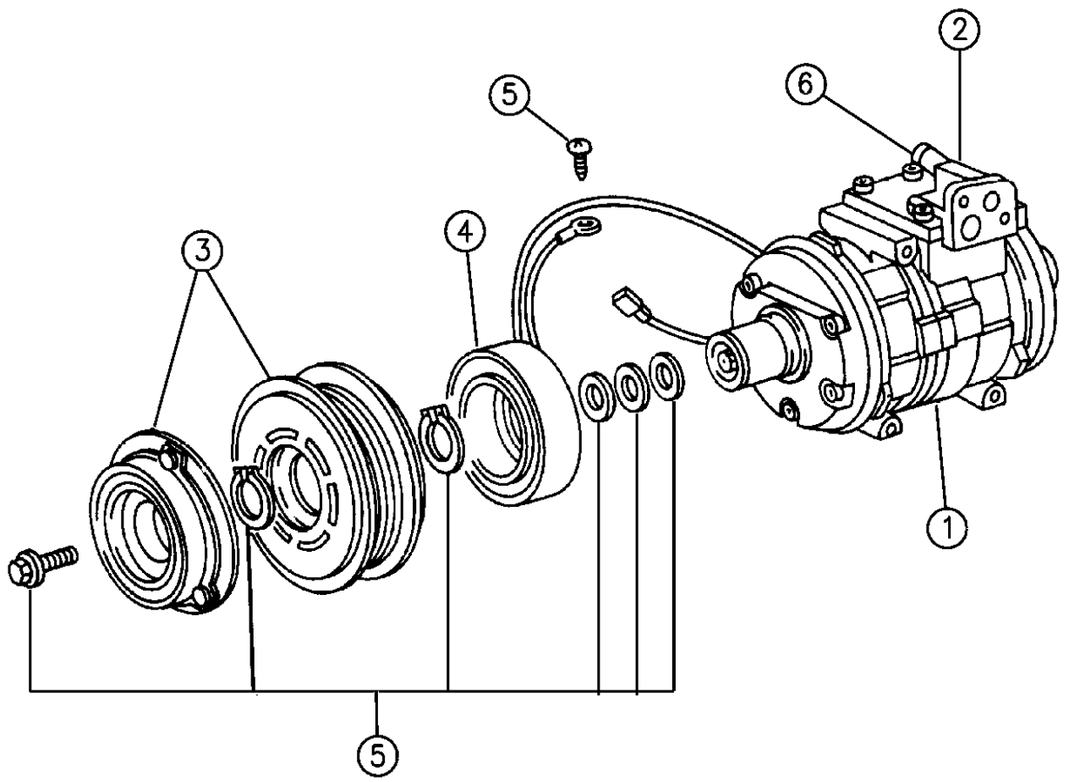

94J24 420

ITEM	PART NUMBER	QTY	BODY	MODEL	DESCRIPTION
1					COMPRESSOR
	5503 6151	1			4.0L Engine
	5600 6551	1			5.2L Engine
	4723 017	1			CAP, Fitting (High Side Servic Port)
	5503 5972	1			CAP, Charge Port
2					MANIFOLD, w/Seal ***
	4761 702	1			4.0L Engine
	4740 682	1			5.2L Engine
	4728 854	1			O-RING, Manifold to Compressor
	5264 457	4			BOLT, Manifold Mounting
	4728 854	1			SEAL, Manifold To Compressor
3					PULLEY, w/Armature
	4720 834	1			4.0L Engine
	4740 683	1			5.2L Engine
4	4720 836	1			COIL, w/Diode
5	4720 835	1			PACKAGE, Clutch Overhaul
					Consists of:
					1 - Snap Ring (Coil)
					1 - Snap Ring (Pulley)
					3 - Shim (.1 .3 .5)
					1 - Bolt (Pulley Mounting)
					1 - Bracket (Diode)
					1 - Screw (Diode Bracket Mounting)
	5264 454	1			PACKAGE, Clutch Snap Ring
6	4720 848	1			VALVE, High Pressure Release
	4740 401	1			O-RING, Relief Valve

MODEL CODES:

72=2 DR Wagon
74=4 DR Wagon
77=Open Body 93" Whlbase
78=Open Body 103" Whlbase - Export
T=2WD
J,N=4WD
U=4WD (RHD)

BODY STYLES:

YJ=Wrangler (4X4) "S"
Weangler (4X4) SE
Wrangler (4X4) Sahara
Wrangler (4X4) Renegade
XJ=Cherokee SE
Cherokee Sport
Cherokee Country
ZJ=Grand Cherokee SE
Grand Cherokee Laredo
Grand Cherolee Limited
ZG=Grand Cherokee European
Y1=Wrangler
X1=Cherokee
Z1=Grand Cherokee
KDX=Vehicles

AR = Use as Required - = Non Illustrated Part P.A.R. = Paint as Required

COMPRESSOR, AIR CONDITIONING 2.5L DIESEL ENGINE ZG BODY
Figure 24-425

24-425

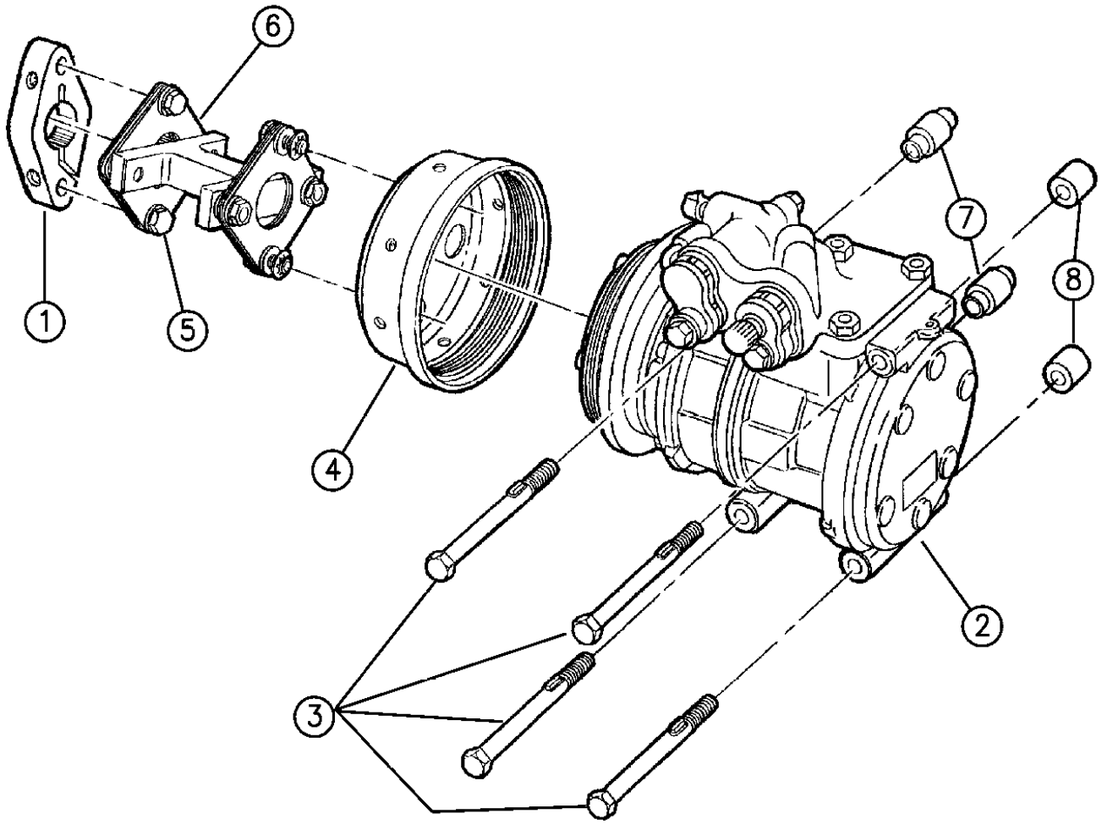

94J24 425

ITEM	PART NUMBER	QTY	BODY	MODEL	DESCRIPTION
1					FLANGE, Drive ***
	4797 721	1			P/S Pump
	4854 075	1			Compressor
2	5503 5993	1			COMPRESSOR, w/Clutch
	4778 589	1			PACKAGE, Magnetic Clutch Overhaul
	4778 588	1			COIL, Stator
	4778 587	1			PACKAGE, Pulley Hub
3	6503 802	4			BOLT, Mtg.
4	4797 754	1			CUP, Drive ***
5		1			SCREW, Serviced in Flex Drive
6	4797 720	1			DRIVE, Flex ***
7	5503 6677	2			SPACER, Front
8	5503 6678	2			SPACER, Rear

MODEL CODES:

72=2 DR Wagon
74=4 DR Wagon
77=Open Body 93" Whlbase
78=Open Body 103" Whlbase - Export
T=2WD
J,N=4WD
U=4WD (RHD)

BODY STYLES:

YJ=Wrangler (4X4) "S"
Weangler (4X4) SE
Wrangler (4X4) Sahara
Wrangler (4X4) Renegade
XJ=Cherokee SE
Cherokee Sport
Cherokee Country
ZJ=Grand Cherokee SE
Grand Cherokee Laredo
Grand Cherolee Limited
ZG=Grand Cherokee European
Y1=Wrangler
X1=Cherokee
Z1=Grand Cherokee
KDX=Vehicles

AR = Use as Required - = Non Illustrated Part P.A.R. = Paint as Required

« RETURN TO GROUP INDEX

COMPRESSOR MOUNTING YJ,XJ BODY
Figure 24-510

24-510

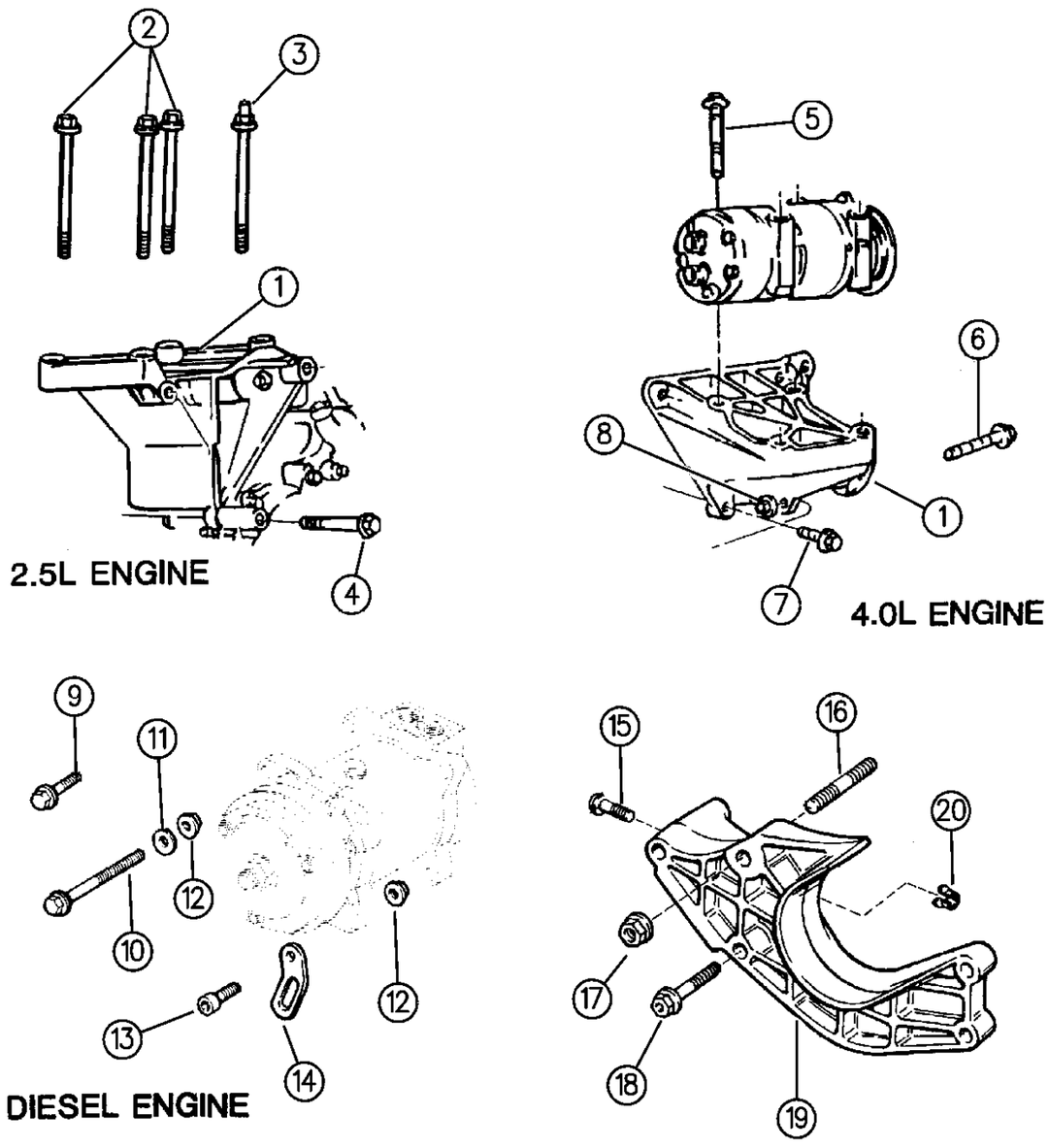

ITEM	PART NUMBER	QTY	BODY	MODEL	DESCRIPTION
1					BRACKET, A/C and Alternator Idler Mtg.
	5300 7600	1	YJ		
	5300 7600	1	XJ		2.5L Engine
	5300 6548	1	XJ		4.0L Engine 1994-95
	5301 1002	1			4.0L Engine 1996
	5301 0089	1			RHD
	5301 0051		X1		RHD 4.0L
	5301 0051		XJ		EUROPE 4.0L
2		3			STUD (DNS)
3	6502 145	1			STUD
4					BOLT
	6502 138	1			
	J400 1102	1			WASHER, Flat, Compressor Mounting Bracket CHINA
5		1			STUD (M8x1.25-100 DNS) ***
6	6502 957	1			BOLT
7	6025 063	1			SCREW
8	6502 135	1			NUT
9	3420 1819	2			BOLT
10	6101 420	1			BOLT
11	J400 1104	1			WASHER
12	1150 2812	3			NUT
13	J420 0446	1			BOLT 35mm
14	5301 0084	1			STRAP, Adjusting
	5301 0083	1			BRACE, Rear
15	3420 1869	2			BOLT
16	3420 1744	1			STUD
17	J420 0081	1			NUT
18	3420 2047	1			BOLT
19	5300 1771	1			BRACKET
20	5300 0548	1			SPACER

MODEL CODES:

72=2 DR Wagon
74=4 DR Wagon
77=Open Body 93" Whlbase
78=Open Body 103" Whlbase - Export
T=2WD
J,N=4WD
U=4WD (RHD)

BODY STYLES:

YJ=Wrangler (4X4) "S"
Weangler (4X4) SE
Wrangler (4X4) Sahara
Wrangler (4X4) Renegade
XJ=Cherokee SE
Cherokee Sport
Cherokee Country
ZJ=Grand Cherokee SE
Grand Cherokee Laredo
Grand Cherolee Limited
ZG=Grand Cherokee European
Y1=Wrangler
X1=Cherokee
Z1=Grand Cherokee
KDX=Vehicles

AR = Use as Required - = Non Illustrated Part P.A.R. = Paint as Required

COMPRESSOR MOUNTING ZJ, ZG BODY
Figure 24-520

24-520B

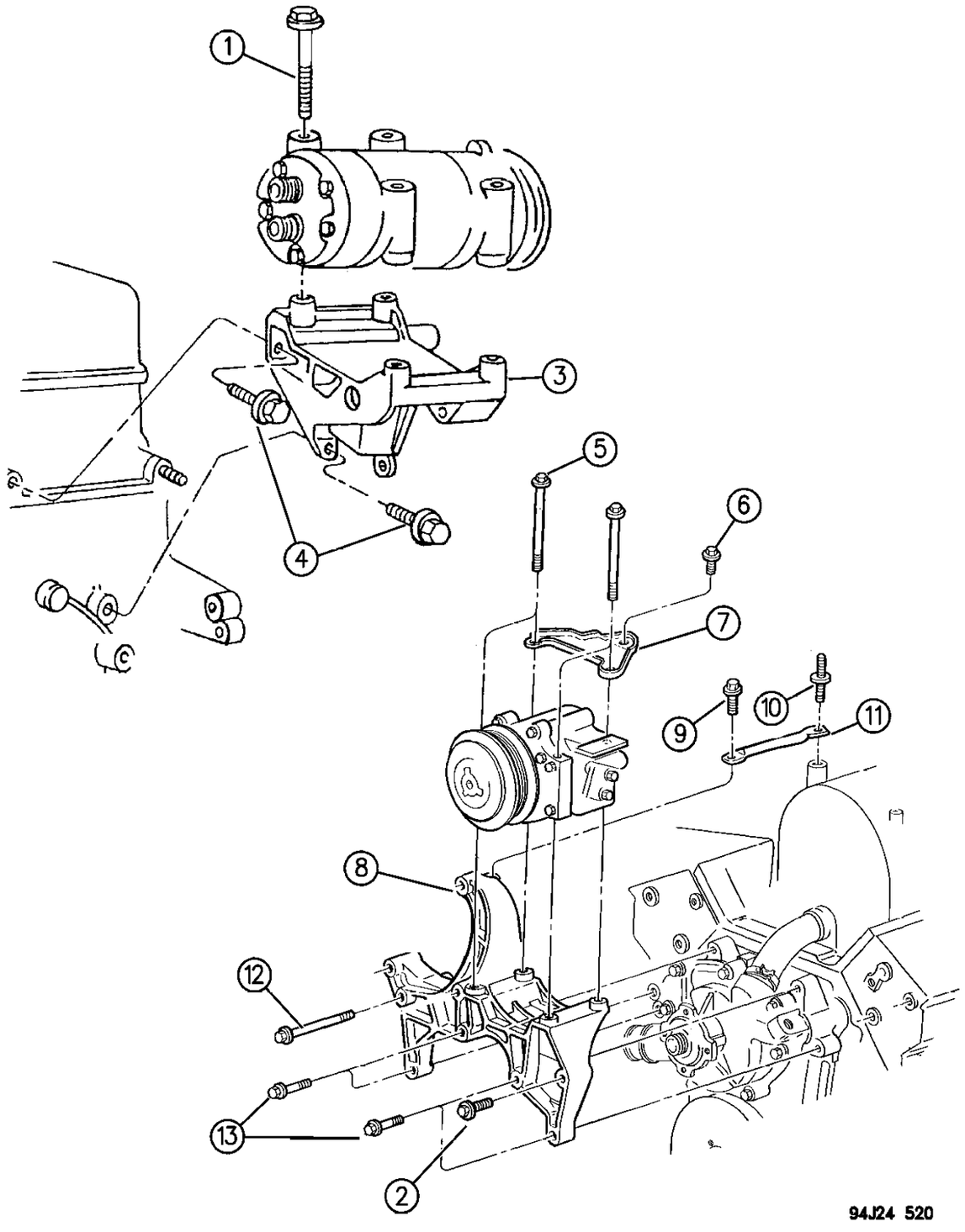

ITEM	PART NUMBER	QTY	BODY	MODEL	DESCRIPTION
1		4			BOLT (M8 x 1.25-1 DNS) ***
2	6034 246	1			SCREW
3	5300 8443	1			BRACKET, Mtg.
	5305 4277	1	ZG		4.0L Engine, RHD
4	6025 063	2			BOLT
5	6034 244	4			SCREW
6					SCREW (DNS)
7	5301 0252	1			BRACE
8	5300 8614	1			BRACKET
9		5			SCREW (DNS)
10	6034 438	3			STUD
11	5300 8746	1			BRACE
12	6034 247	2			SCREW
13		6			SCREW (DNS)

MODEL CODES:

72=2 DR Wagon
74=4 DR Wagon
77=Open Body 93" Whlbase
78=Open Body 103" Whlbase - Export
T=2WD
J,N=4WD
U=4WD (RHD)

BODY STYLES:

YJ=Wrangler (4X4) "S"
Weangler (4X4) SE
Wrangler (4X4) Sahara
Wrangler (4X4) Renegade
XJ=Cherokee SE
Cherokee Sport
Cherokee Country
ZJ=Grand Cherokee SE
Grand Cherokee Laredo
Grand Cherolee Limited
ZG=Grand Cherokee European
Y1=Wrangler
X1=Cherokee
Z1=Grand Cherokee
KDX=Vehicles

AR = Use as Required - = Non Illustrated Part P.A.R. = Paint as Required

« RETURN TO GROUP INDEX

AIR DISTRIBUTION DUCTS, FRESH AIR YJ BODY
Figure 24-605

24-605

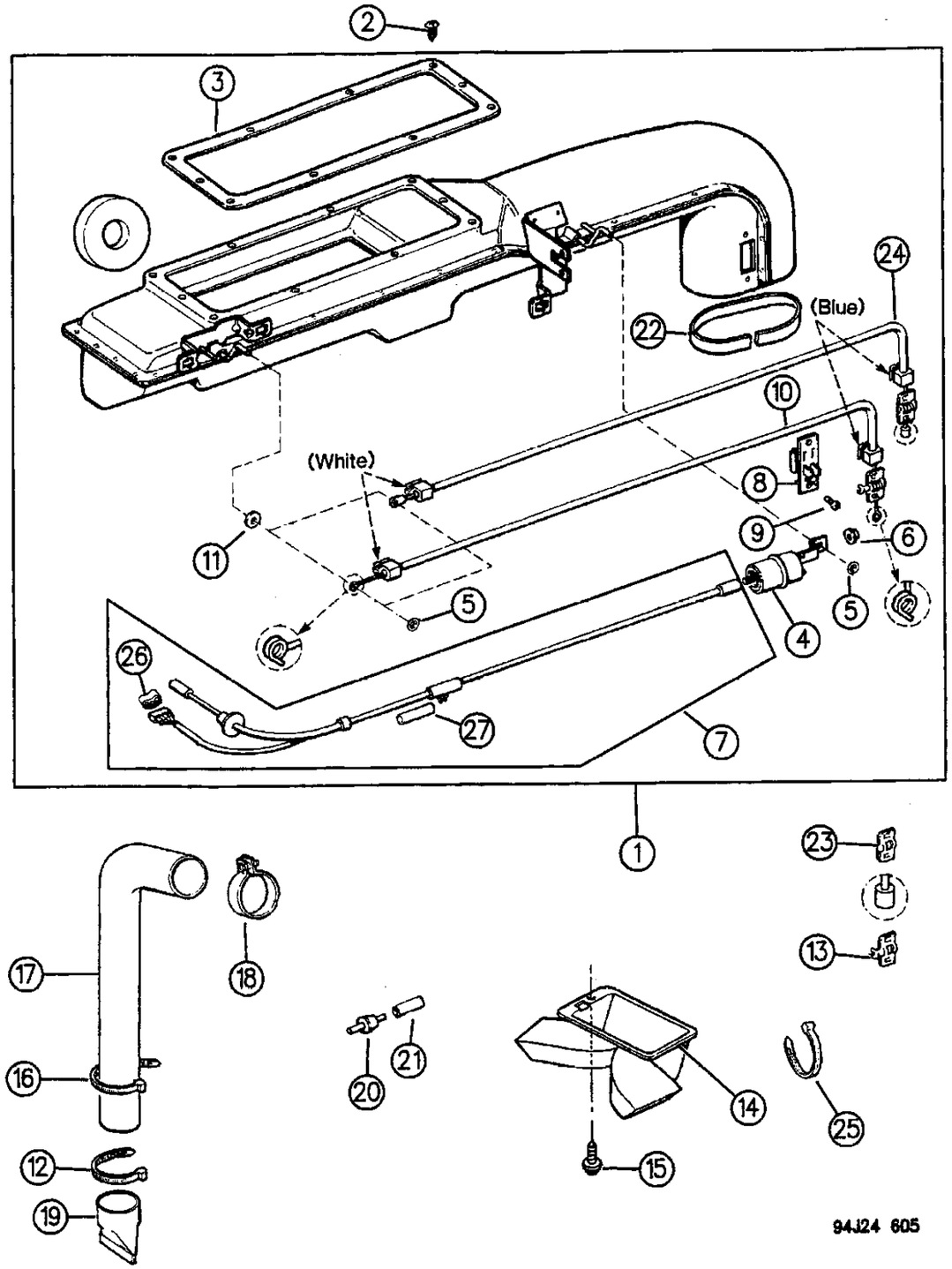

ITEM	PART NUMBER	QTY	BODY	MODEL	DESCRIPTION
1	5503 7200	1			DUCT, Air
2	J400 4112	2			SCREW
3	5505 2592	1			GASKET, Air Vent
4	5600 1456	1			MOTOR, Vacuum
5	J400 1714	2			NUT
6	3420 1001	2			NUT
7	5503 6324	1			HARNESS, Vacuum
	J417 5263	1			CLIP, Harness
8					RESISTOR
	5503 5958	1			Except RHD
	5503 6974	1			RHD
9	3420 1298	2			SCREW
10	5600 2697	1			CABLE, Air Vent
11	J044 6152	1			WASHER
12	J322 3227	AR			STRAP
13	J400 5761	1			CLIP
14	5503 5618	1			DUCT, Floor Air
15	9416 639	1			SCREW
16	J400 6101	1			STRAP
17	5503 6229	1			HOSE, Drain
18	J320 3078	1			CLAMP
19	J098 7079	1			CAP, Drain
20	J322 5641	1			VALVE, Check
21	8330 0080	AR			HOSE, Vacuum (1 ft. length)
22	5600 2581	1			SEAL, Duct
23	5600 2700	1			CLIP
24	5600 2697	1			CABLE, Air Vent
25	J323 0270	1			STRAP
26	5600 6302	1			CONNECTOR
27	5600 6302	1			CONNECTOR

MODEL CODES:

72=2 DR Wagon
74=4 DR Wagon
77=Open Body 93" Whlbase
78=Open Body 103" Whlbase - Export
T=2WD
J,N=4WD
U=4WD (RHD)

BODY STYLES:

YJ=Wrangler (4X4) "S"
Weangler (4X4) SE
Wrangler (4X4) Sahara
Wrangler (4X4) Renegade
XJ=Cherokee SE
Cherokee Sport
Cherokee Country
ZJ=Grand Cherokee SE
Grand Cherokee Laredo
Grand Cherolee Limited
ZG=Grand Cherokee European
Y1=Wrangler
X1=Cherokee
Z1=Grand Cherokee
KDX=Vehicles

AR = Use as Required - = Non Illustrated Part P.A.R. = Paint as Required

« RETURN TO GROUP INDEX

AIR DUCT AND OUTLET, FRESH AIR W/O HEATER EUROPE, MIDEAST, KDX YJ BODY
Figure 24-610

24-610

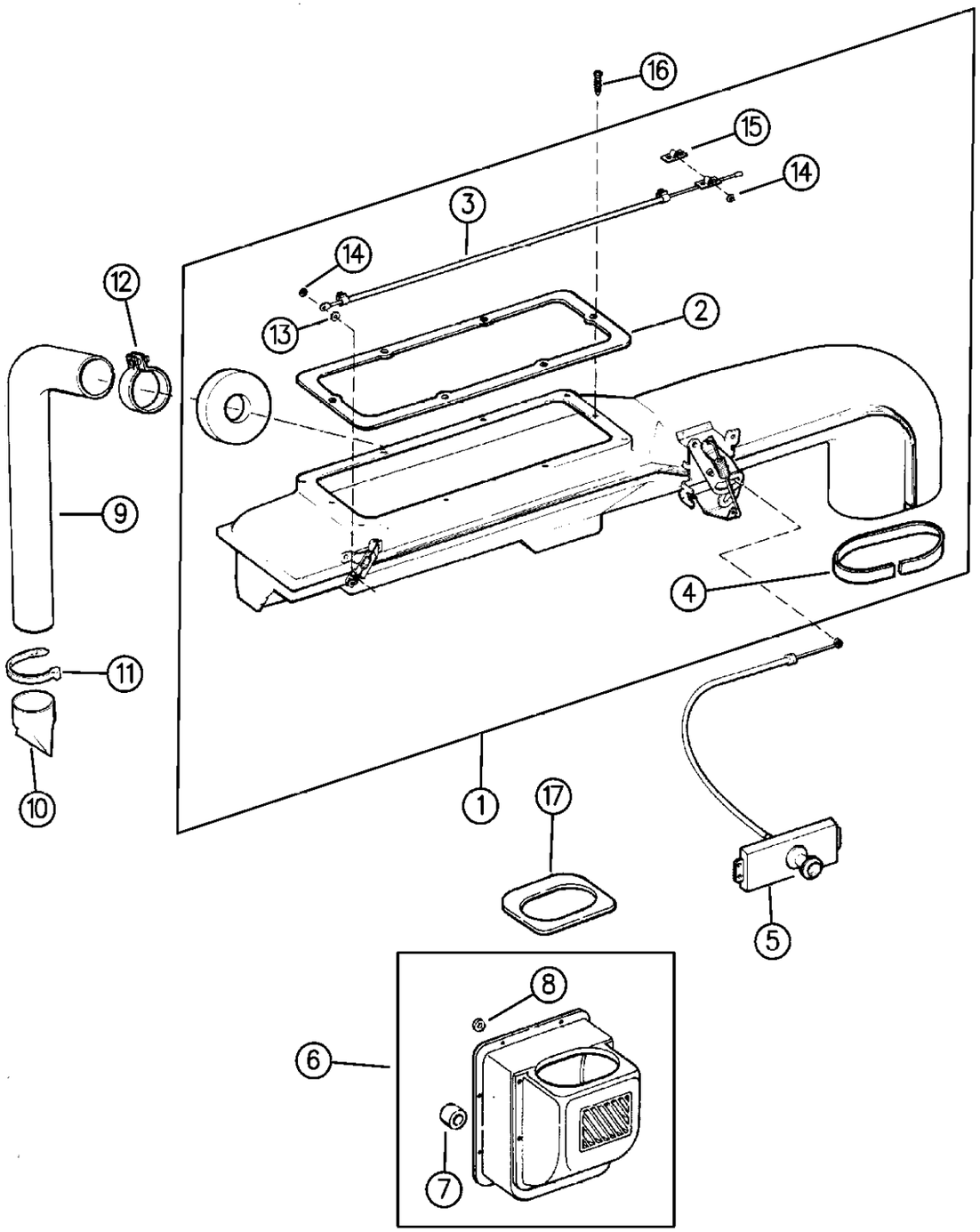

ITEM	PART NUMBER	QTY	BODY	MODEL	DESCRIPTION
1	5600 2051	1			DUCT, Air
2	5505 2592	1			GASKET, Air Vent
3	5600 2964	1			CABLE, Air Vent
4	5600 2581	1			SEAL, Duct
5	5603 0036	1			CONTROL, Vent
6	5600 2560	6			INLET, Fresh Air
7	J546 2712	1			SEAL, Drain
8	J575 1404	2			SPACER
9	J546 3813	1			HOSE, Drain
10	J098 7079	1			CAP, Drain
11	J322 3227	1			STRAP
12	J320 3078	1			CLAMP
13	J044 6152	1			WASHER
14	J400 1714	AR			NUT, Push
15	5600 2700	1			CLIP
16	J400 4112	4			SCREW
17	J546 3794	1			SEAL

MODEL CODES:

72=2 DR Wagon
74=4 DR Wagon
77=Open Body 93" Whlbase
78=Open Body 103" Whlbase - Export
T=2WD
J,N=4WD
U=4WD (RHD)

BODY STYLES:

YJ=Wrangler (4X4) "S"
Weangler (4X4) SE
Wrangler (4X4) Sahara
Wrangler (4X4) Renegade
XJ=Cherokee SE
Cherokee Sport
Cherokee Country
ZJ=Grand Cherokee SE
Grand Cherokee Laredo
Grand Cherolee Limited
ZG=Grand Cherokee European
Y1=Wrangler
X1=Cherokee
Z1=Grand Cherokee
KDX=Vehicles

AR = Use as Required - = Non Illustrated Part P.A.R. = Paint as Required

« RETURN TO GROUP INDEX

AIR DUCTS AND OUTLETS XJ BODY
Figure 24-620

24-620A

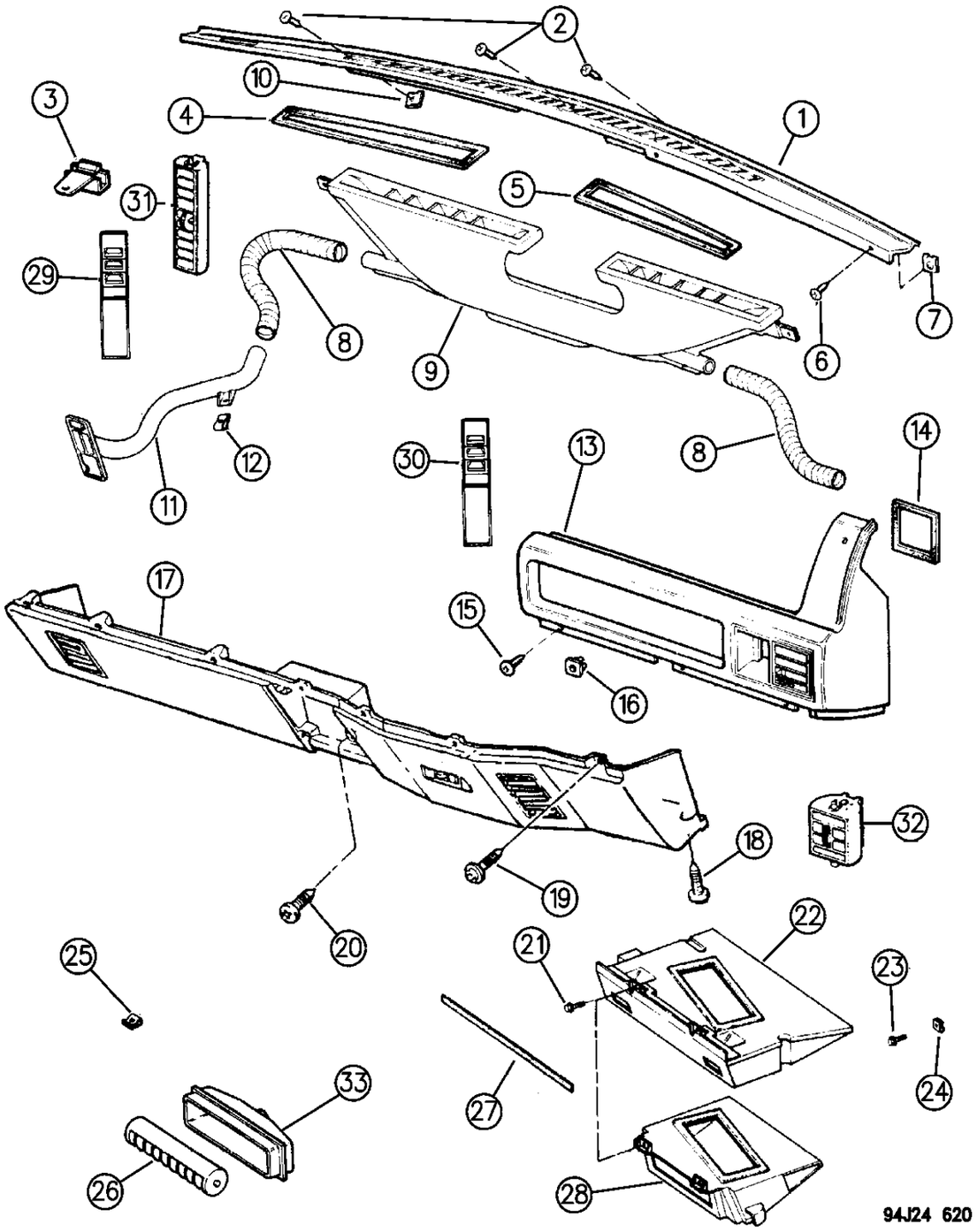

ITEM	PART NUMBER	QTY	BODY	MODEL	DESCRIPTION
1					BEZEL, Defroster
	5AC3 8JA8	1			Charcoal
	5AC3 8JY6	1			Dark Sand
	5DM7 4MY6	1			RHD
2		3			SCREW (DNS)
3	5500 2603	2			RETAINER
4	5511 5024	1			SEAL
5	5511 5025	1			SEAL
6	1150 1119	2			SCREW
7	J400 4223	8			NUT
8	4713 268	1			DUCT, Side Defroster
9	5511 4654	1			PANEL, Defroster Air Duct
	5503 5665	1			RHD
	3420 1340	2			SCREW, Air Duct Panel, RHD
10	3420 2502	4			NUT
11	5500 2205	1			DUCT, Side Defroster
12	J400 0383	4			NUT
13		1			BEZEL, Lower
	5AG7 2JY6				LHD
	5DL3 6RY6				RHD
14	5500 2875	1			GASKET
15	J400 2461	4			SCREW
16	J400 4689	2			NUT
17	5EB9 7PY6	1			PANEL, Inst. Panel, Lower (w/o Lap Cooler)
	5EB9 9PY6				1994 RHD
	5DL3 4RY6				1995-96 RHD
	5600 5896	1			PLUG, Lap Cooler
18	3420 1474	2			SCREW
19	1150 0055	7			SCREW
20	J400 7056	1			SCREW
21	J448 9487	2			SCREW
22	5503 5786	1			DUCT, Floor, w/o Console
	5503 5666	1			RHD
23	3420 2344	2			SCREW
24	1150 0656	2			NUT
25	1150 0656	4			NUT
26	5500 0929	1			OUTLET, Air
27	5600 1218	1			OVERLAY ***
28	5503 5787	1			DUCT, Blower to Console w/Floor Console
	5503 5667	1			RHD
29	5500 0931	1			BEZEL, Air Outlet
30	5500 2056	1			BEZEL, Air Outlet

MODEL CODES:

72=2 DR Wagon
74=4 DR Wagon
77=Open Body 93" Whlbase
78=Open Body 103" Whlbase - Export
T=2WD
J,N=4WD
U=4WD (RHD)

BODY STYLES:

YJ=Wrangler (4X4) "S"
Weangler (4X4) SE
Wrangler (4X4) Sahara
Wrangler (4X4) Renegade
XJ=Cherokee SE
Cherokee Sport
Cherokee Country
ZJ=Grand Cherokee SE
Grand Cherokee Laredo
Grand Cherolee Limited
ZG=Grand Cherokee European
Y1=Wrangler
X1=Cherokee
Z1=Grand Cherokee
KDX=Vehicles

AR = Use as Required - = Non Illustrated Part P.A.R. = Paint as Required

AIR DUCTS AND OUTLETS XJ BODY
Figure 24-620

24-620A

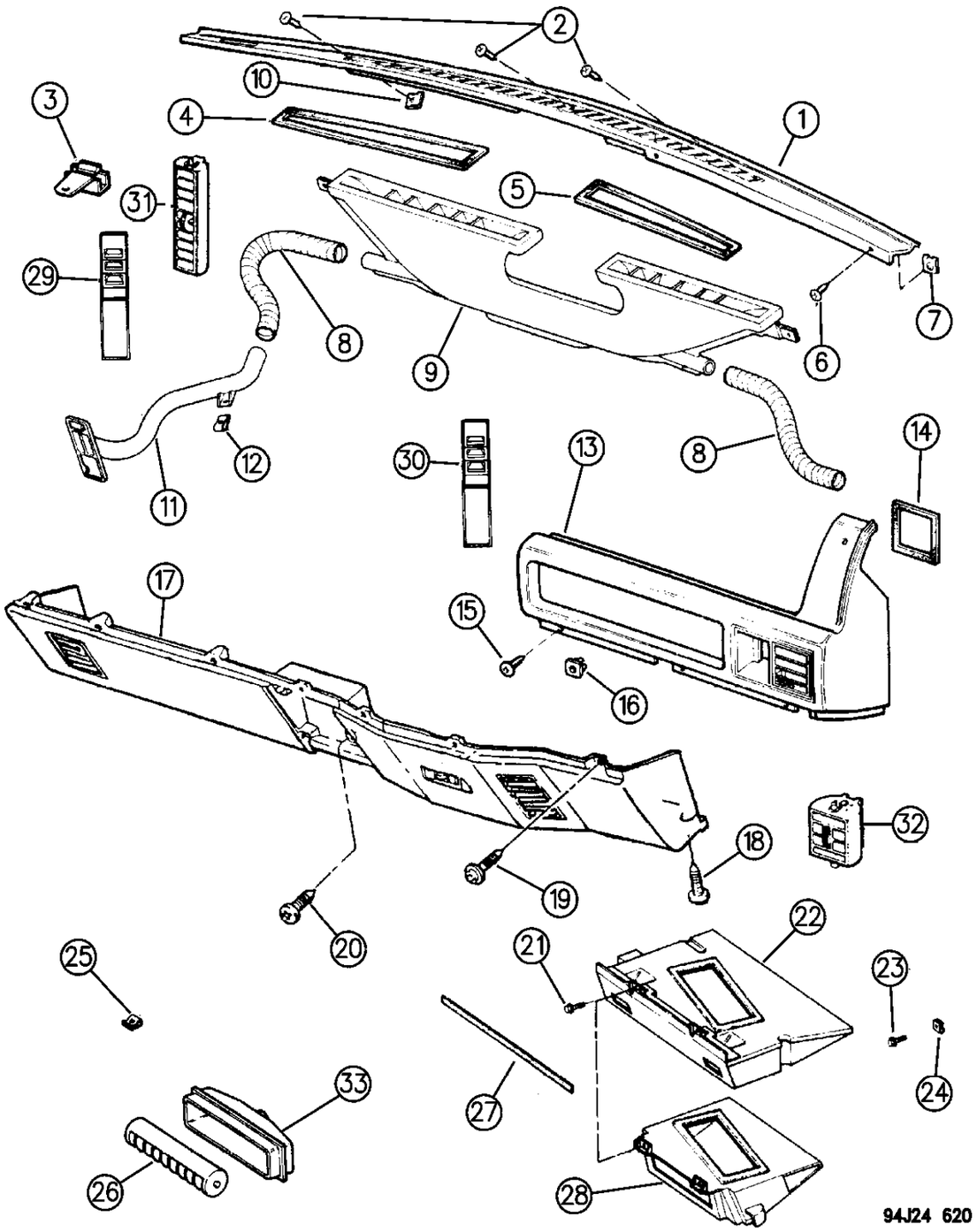

ITEM	PART NUMBER	QTY	BODY	MODEL	DESCRIPTION
31					OUTLET, Air
	5501 7671	2			Black
	5500 4027	2			Bright
32					OUTLET, Air
	5501 7680	1			Black
	5500 4026	1			Bright
33		1			COOLER, Lap, See Group 8A

MODEL CODES:

72=2 DR Wagon
74=4 DR Wagon
77=Open Body 93" Whlbase
78=Open Body 103" Whlbase - Export
T=2WD
J,N=4WD
U=4WD (RHD)

BODY STYLES:

YJ=Wrangler (4X4) "S"
Weangler (4X4) SE
Wrangler (4X4) Sahara
Wrangler (4X4) Renegade
XJ=Cherokee SE
Cherokee Sport
Cherokee Country
ZJ=Grand Cherokee SE
Grand Cherokee Laredo
Grand Cherolee Limited
ZG=Grand Cherokee European
Y1=Wrangler
X1=Cherokee
Z1=Grand Cherokee
KDX=Vehicles

AR = Use as Required - = Non Illustrated Part P.A.R. = Paint as Required

AIR DUCTS AND OUTLETS ZJ, ZG BODY
Figure 24-630

24-630

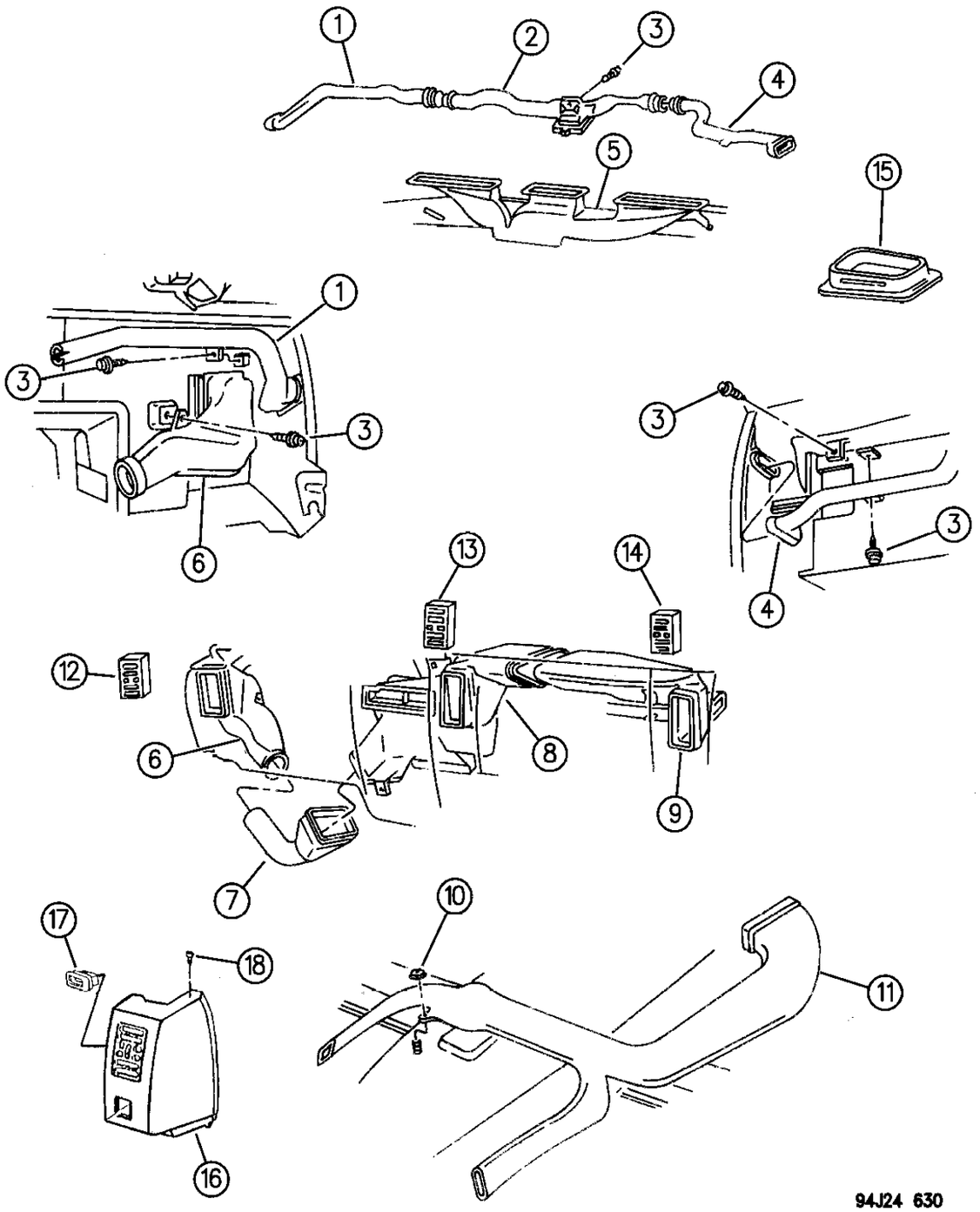

ITEM	PART NUMBER	QTY	BODY	MODEL	DESCRIPTION
1	5503 1785	1			DUCT, Side, Window Defrost, Left
	5511 5235	1			1996
	5535 6725	1			1996, RHD
2					DUCT, Side, Window Defrost, Center
	5511 4936	1			1994-95
	5511 5329	1			1996
	5535 6721	1			1996 RHD
3		6			SCREW (DNS)
4	5503 1784	1			DUCT, Side, Window Defrost, Right
	5511 5234	1			1996
	5535 6724	1			1996, RHD
5	5600 5018	1			DUCT, Defroster
	5511 5761	1			1996
	5535 6780	1			1996, RHD
	4732 061	1			ADAPTER, Defroster Duct, 1996
6	5511 4939	1			DUCT, Air Outlet, Left
	5511 5233	1			1996
	5535 6613	1			1996, RHD
7	5511 4800	1			DUCT, Center, Left
8					DUCT, A/C Center
	5511 5840	1			1994-95
	5511 5231	1			1996
	5535 6664	1			1996, RHD
9	5511 4938	1			DUCT, Outlet, Right
	5511 5232	1			1996
	5535 6612	1			1996, RHD
10	6100 839	1			NUT, Push
11	5503 5914	1			DUCT, Rear Floor Heat
	5503 6754	1			RHD
12					BARREL ASSEMBLY, Left Outlet 1994-95, See Group 8Afor 1996 ***
	5DE3 9LD5	1			Medium Quartz
	5DE3 9LF8	1			Dark Driftwood
	5DE3 9MV4	1			Lt. Champagne
13					BARREL ASSEMBLY, Center Outlet 1994-95, See Group 8A for 1996 ***
	5DE4 0LD5	1			Medium Quartz
	5DE4 0LF8	1			Dark Driftwood
	5DE4 0MV4	1			Lt. Champagne
14					BARREL, Right Outlet 1994-95, See Group 8A for 1996 ***
	5DE3 8LD5	1			Medium Quartz
	5DE3 8LF8	1			Dark Driftwood

MODEL CODES:

72=2 DR Wagon
74=4 DR Wagon
77=Open Body 93" Whlbase
78=Open Body 103" Whlbase - Export
T=2WD
J,N=4WD
U=4WD (RHD)

BODY STYLES:

YJ=Wrangler (4X4) "S"
Weangler (4X4) SE
Wrangler (4X4) Sahara
Wrangler (4X4) Renegade
XJ=Cherokee SE
Cherokee Sport
Cherokee Country
ZJ=Grand Cherokee SE
Grand Cherokee Laredo
Grand Cherolee Limited
ZG=Grand Cherokee European
Y1=Wrangler
X1=Cherokee
Z1=Grand Cherokee
KDX=Vehicles

AR = Use as Required - = Non Illustrated Part P.A.R. = Paint as Required

AIR DUCTS AND OUTLETS ZJ, ZG BODY
Figure 24-630

24-630

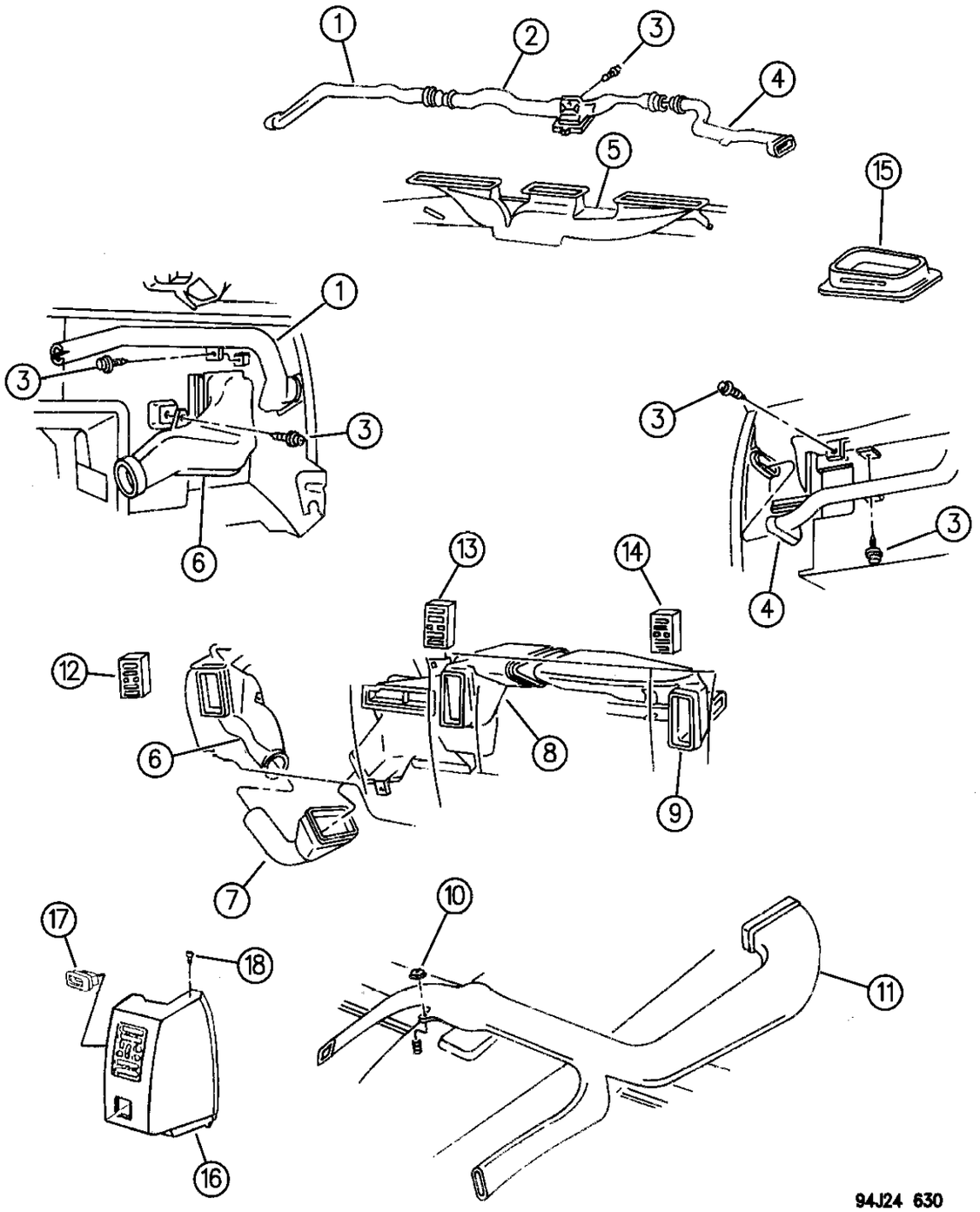

ITEM	PART NUMBER	QTY	BODY	MODEL	DESCRIPTION
	5DE3 8MV4	1			Lt. Champagne
15		1			BAFFLE, Inlet ***
	5503 6373				1994
	5503 6517				1995-96
	5511 6109	1			RHD
	5503 6542	1			SCREEN, Cowl
16					BEZEL, Air Outlet, Left
					Contains Bezel, Housing, and Barrel
	5DF2 1LD5	1			Medium Quartz
	5DF2 1LF8	1			Dark Driftwood
	5DF2 1MV4	1			Lt. Champagne
17	5503 0275	2			SEAL, Duct
18					SCREW (DNS)
					TRAP, Debris ***
	5511 5770	1			Defroster Duct to Cowl, Right
	5511 5771	1			Defroster Duct to Cowl, Left
	5511 5765	1			Defroster Duct to Cowl, Center
	5535 6784	1			Defroster Duct to Cowl, Right RHD
	5535 6785	1			Defroster Duct to Cowl, Left RHD

MODEL CODES:

72=2 DR Wagon
74=4 DR Wagon
77=Open Body 93" Whlbase
78=Open Body 103" Whlbase - Export
T=2WD
J,N=4WD
U=4WD (RHD)

BODY STYLES:

YJ=Wrangler (4X4) "S"
Weangler (4X4) SE
Wrangler (4X4) Sahara
Wrangler (4X4) Renegade

XJ=Cherokee SE
Cherokee Sport
Cherokee Country

ZJ=Grand Cherokee SE
Grand Cherokee Laredo
Grand Cherolee Limited
ZG=Grand Cherokee European

Y1=Wrangler
X1=Cherokee
Z1=Grand Cherokee
KDX=Vehicles

AR = Use as Required - = Non Illustrated Part P.A.R. = Paint as Required

SAGIPARTS

GROUP-25
EMISSIONS

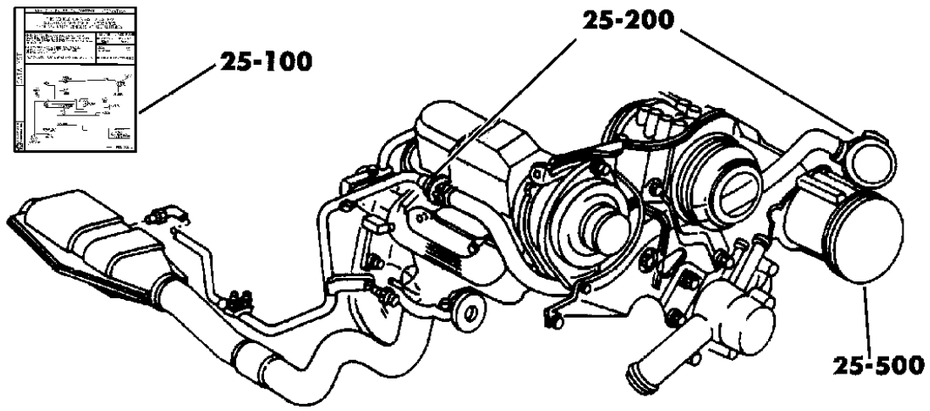

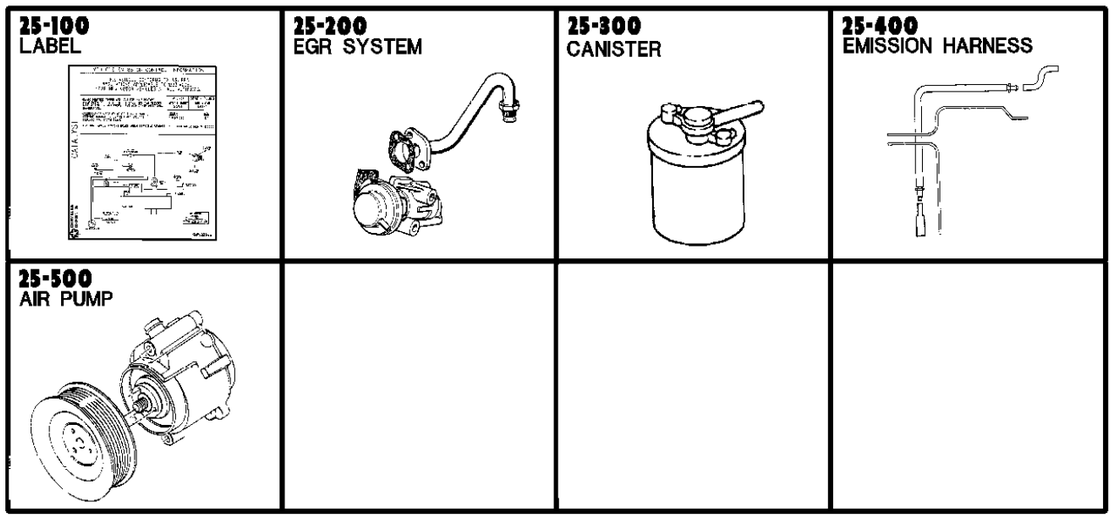

GROUP 25 - EMISSION SYSTEMS

ILLUSTRATION TITLE — **GROUP-FIG. NO.**

EMISSION LABELS
EMISSION LABELS YJ BODY . . . . . Fig. 25-110
EMISSION LABELS XJ BODY . . . . . Fig. 25-120
EMISSION LABELS ZJ BODY . . . . . Fig. 25-130

EGR SYSTEM
EGR SYSTEM 2.5L DIESEL ENGINE XJ BODY . . . . . Fig. 25-220
EGR SYSTEM 2.5L CARBURETED ENGINE X1 BODY . . . . . Fig. 25-225
EGR SYSTEM 5.2L ENGINE ZJ BODY . . . . . Fig. 25-245
EGR SYSTEM 2.5L DIESEL ENGINE ZG BODY . . . . . Fig. 25-250
EGR SYSTEM Z1 BODY . . . . . Fig. 25-255

VACUUM CANISTER
VACUUM CANISTER YJ BODY . . . . . Fig. 25-310
VACUUM CANISTER 2.5L, 4.0L GAS AND 2.1L DIESEL ENGINE . . . . . Fig. 25-330
VACUUM CANISTER 4.0L ENGINE XJ BODY, RHD . . . . . Fig. 25-340
VACUUM CANISTER ZJ BODY . . . . . Fig. 25-350

EMISSION CONTROL VACUUM HARNESS
EMISSION CONTROL VACUUM HARNESS 2.5L ENGINE YJ BODY . . . . . Fig. 25-410
EMISSION CONTROL VACUUM HARNESS 4.0L ENGINE YJ BODY . . . . . Fig. 25-420
EMISSION CONTROL VACUUM HARNESS 2.5L, 4.0L GAS AND 2.1L DIESEL ENGINE XJ BODY . . . . . Fig. 25-430
EMISSION CONTROL VACUUM HARNESS 4.0L ENGINE XJ BODY, RHD . . . . . Fig. 25-440
EMISSION CONTROL VACUUM HARNESS 2.5L DIESEL ENGINE XJ BODY . . . . . Fig. 25-445
VACUUM PUMP 2.5L DIESEL ENGINE XJ BODY . . . . . Fig. 25-447
EMISSION CONTROL VACUUM HARNESS 4.0L ENGINE ZJ BODY . . . . . Fig. 25-450
EMISSION CONTROL VACUUM HARNESS 5.2L ENGINE ZJ BODY . . . . . Fig. 25-460
VACUUM PUMP 2.5L DIESEL ENGINE ZG BODY . . . . . Fig. 25-470

EMISSION LABELS YJ BODY
Figure 25-110

25-110

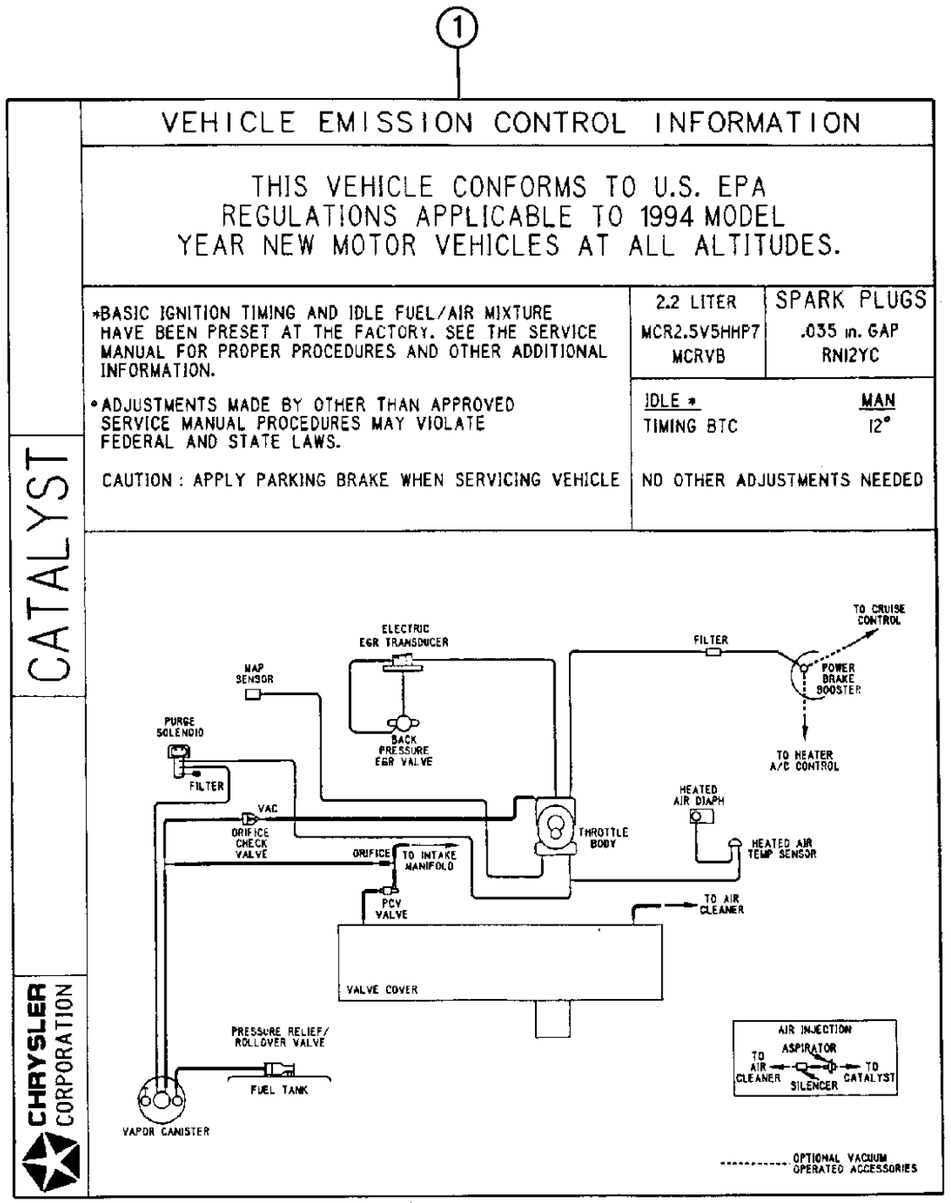

94J25 110

ITEM	PART NUMBER	QTY	BODY	MODEL	DESCRIPTION
1					LABEL, Emission
					1994 ***
					2.5L Eng.
	5303 1183	1			Federal and H/A
	5303 1184	1			Calif.
					4.0L Eng.
	5303 1186	1			Federal and H/A
	5303 1188	1			Calif., Man. Trans.
	5303 1187	1			Calif., Auto Trans.
					1995 ***
					2.5L Eng.
	5303 2244	1			Federal
	5303 1359	1			Calif.
	5303 1246	1			Canada
					4.0L Eng.
	5303 1245	1			Federal, Man. Trans.
	5303 1247	1			Federal, Auto Trans.
	5303 1360	1			Calif., Man. Trans.
	5303 1251	1			Calif., Auto Trans.
	5303 1248	1			Canada, Man. Trans.
	5303 1249	1			Canada, Auto Trans.

MODEL CODES:

72=2 DR Wagon
74=4 DR Wagon
77=Open Body 93" Whlbase
78=Open Body 103" Whlbase - Export
T=2WD
J,N=4WD
U=4WD (RHD)

BODY STYLES:

YJ=Wrangler (4X4) "S"
Weangler (4X4) SE
Wrangler (4X4) Sahara
Wrangler (4X4) Renegade
XJ=Cherokee SE
Cherokee Sport
Cherokee Country
ZJ=Grand Cherokee SE
Grand Cherokee Laredo
Grand Cherolee Limited
ZG=Grand Cherokee European
Y1=Wrangler
X1=Cherokee
Z1=Grand Cherokee
KDX=Vehicles

AR = Use as Required - = Non Illustrated Part P.A.R. = Paint as Required

EMISSION LABELS XJ BODY
Figure 25-120

25–120

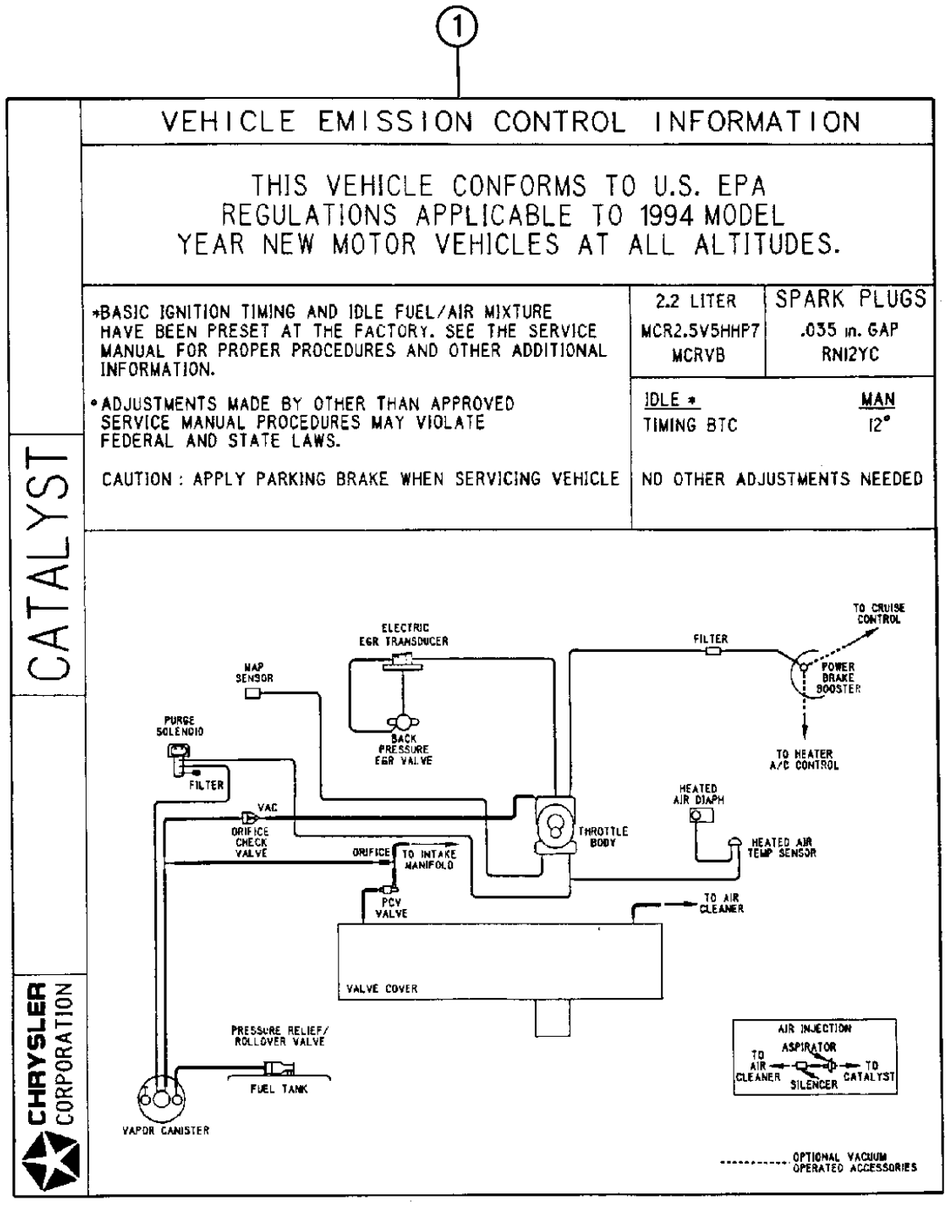

94J25 120

ITEM	PART NUMBER	QTY	BODY	MODEL	DESCRIPTION
1					LABEL, Emission
					1994 ***
					2.5L Eng.
	5303 1183	1			Federal and H/A
	5303 1184	1			Calif.
					4.0L Eng.
	5303 1186	1			Federal and H/A
	5303 1188	1			Calif., Man. Trans.
	5303 1187	1			Calif., Auto Trans.
	5529 5196	1			Europe
					1995 ***
					2.5L Eng.
	5303 2244	1			Federal
	5303 1415	1			Australia, (Diesel Eng.)
					4.0L Eng.
	5303 1245	1			Federal, Man. Trans.
	5303 1247	1			Federal, Auto Trans.
	5303 1405	1			Federal, Auto Trans., w/4WD, LHD
					1996 ***
					2.5L Eng. ***
	5303 1341	1			Federal
	5303 1342	1			Calif.
	5303 1426	1			Canada
	5303 1415	1			2.5L Diesel Eng. ***
					4.0L Eng. ***
					Federal
	5303 1344	1			Except, LHD, 4WD, w/Auto Trans.
	5303 1346	1			LHD, 4WD, w/Auto Trans, w/Air
	5303 1344	1			LHD, 4WD, w/Auto Trans, w/o Air
					Calif.
	5303 1345	1			Except, LHD, 4WD, w/Auto Trans.
	5303 1343	1			LHD, 4WD, w/Auto Trans, w/Air
	5303 1345	1			LHD, 4WD, w/Auto Trans, w/o Air
					Canada
	5303 1427	1			Except, LHD, 4WD, w/Auto Trans.
	5303 1428	1			LHD, 4WD, w/Auto Trans, w/Air
	5303 1427	1			LHD, 4WD, w/Auto Trans, w/o Air

MODEL CODES:

72=2 DR Wagon
74=4 DR Wagon
77=Open Body 93" Whlbase
78=Open Body 103" Whlbase - Export
T=2WD
J,N=4WD
U=4WD (RHD)

BODY STYLES:

YJ=Wrangler (4X4) "S"
Weangler (4X4) SE
Wrangler (4X4) Sahara
Wrangler (4X4) Renegade
XJ=Cherokee SE
Cherokee Sport
Cherokee Country
ZJ=Grand Cherokee SE
Grand Cherokee Laredo
Grand Cherolee Limited
ZG=Grand Cherokee European
Y1=Wrangler
X1=Cherokee
Z1=Grand Cherokee
KDX=Vehicles

AR = Use as Required - = Non Illustrated Part P.A.R. = Paint as Required

EMISSION LABELS ZJ BODY
Figure 25-130

25–130

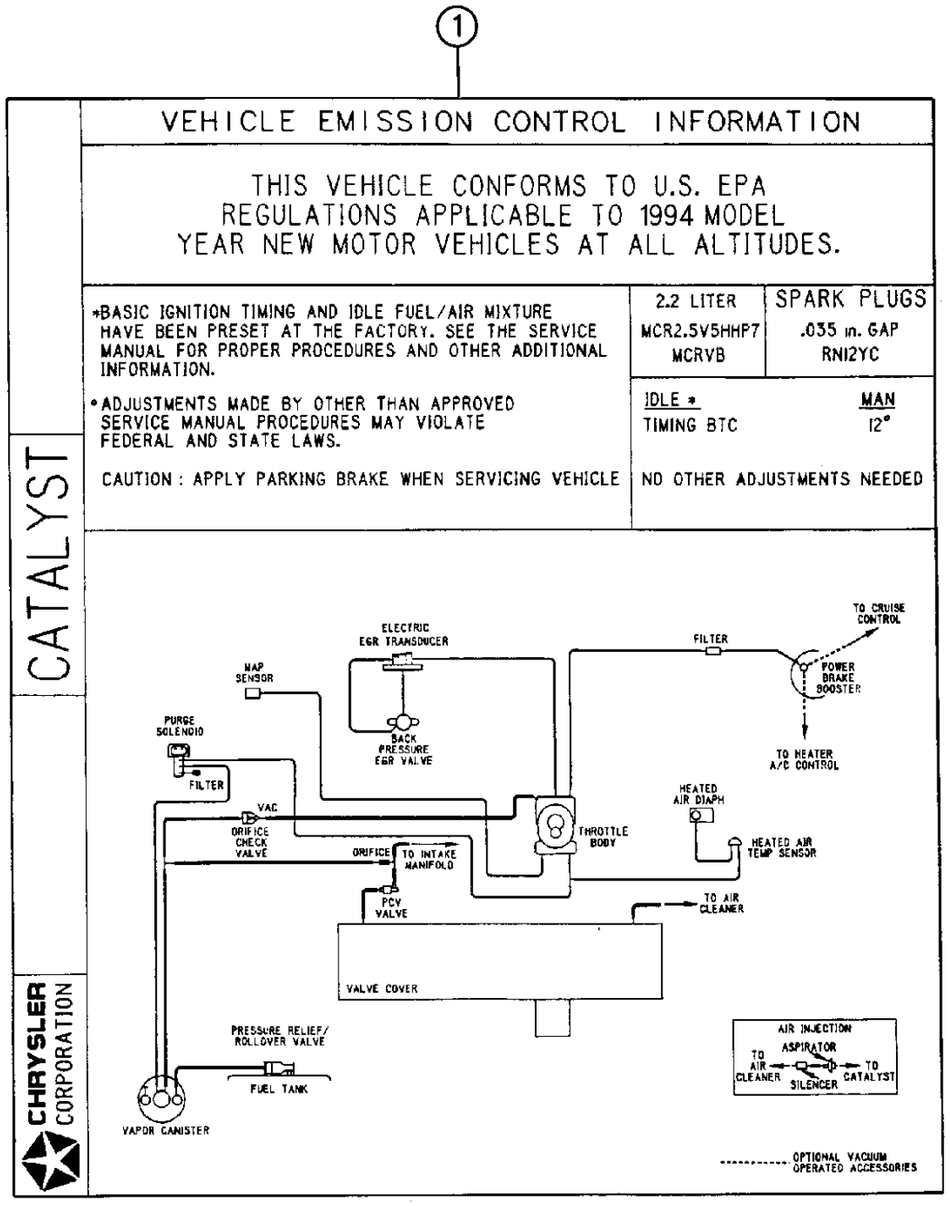

94J25 130

ITEM	PART NUMBER	QTY	BODY	MODEL	DESCRIPTION
1					LABEL, Emission
					1994 ***
					4.0L Eng.
	5303 1173	1			Federal and H/A, Man. Trans.
	5303 1172	1			Federal and H/A, Auto Trans.
	5303 1175	1			Calif., Man. Trans.
	5303 1174	1			Calif., Auto Trans.
					5.2L Eng.
	5303 0139	1			Federal and H/A, Auto Trans.
	5303 0140	1			Calif., Auto Trans.
					1995 ***
					4.0L Eng.
	5303 1237	1			Federal, Man. Trans., w/o Emissions Package
	5303 1386	1			Federal, Man. Trans., w/Emissions Package
	5303 1238	1			Federal, Auto Trans.
	5303 1416	1			Calif.
	5303 1235	1			Canada, Man. Trans.
	5303 1236	1			Canada, Auto Trans.
					5.2L Eng.
	5303 1239	1			Federal, w/o Emissions Package
	5303 1356	1			Federal, w/Emissions Package
	5303 1240	1			Canada
					1996 ***
					4.0L Eng.
	5303 1439	1			Federal, 2WD
	5303 1439	1			Federal, 4WD, w/Model 242 Transf. Case
	5303 1441	1			Federal, 4WD, w/Model 249 Transf. Case
	5303 1347	1		Z1	
	5303 1440	1		ZG	
					Calif.
	4854 469	1			Up To 11-27-95
	4854 487	1			After 11-27-95
	4854 473	1			Canada, 2WD
	4854 473	1			Canada, 4WD, w/Model 242 Transf. Case
	4854 474	1			Canada, 4WD, w/Model 249 Transf. Case
					5.2L Eng.
	5303 1350	1			Federal
	5303 1351	1			Calif.
	5303 1352	1			Canada

MODEL CODES:

72=2 DR Wagon
74=4 DR Wagon
77=Open Body 93" Whlbase
78=Open Body 103" Whlbase - Export
T=2WD
J,N=4WD
U=4WD (RHD)

BODY STYLES:

YJ=Wrangler (4X4) "S"
Weangler (4X4) SE
Wrangler (4X4) Sahara
Wrangler (4X4) Renegade
XJ=Cherokee SE
Cherokee Sport
Cherokee Country
ZJ=Grand Cherokee SE
Grand Cherokee Laredo
Grand Cherolee Limited
ZG=Grand Cherokee European
Y1=Wrangler
X1=Cherokee
Z1=Grand Cherokee
KDX=Vehicles

AR = Use as Required - = Non Illustrated Part P.A.R. = Paint as Required

EGR SYSTEM 2.5L DIESEL ENGINE XJ BODY
Figure 25-220

25–220

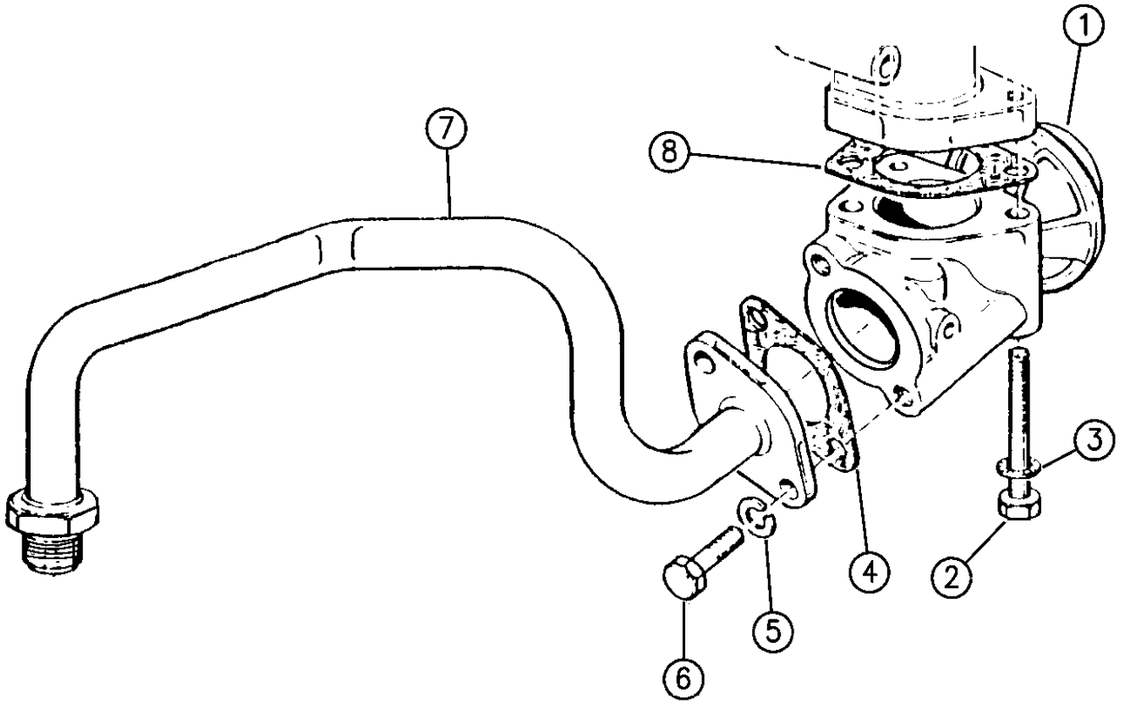

94J25 220

ITEM	PART NUMBER	QTY	BODY	MODEL	DESCRIPTION
1					VALVE, EGR
	4720 662	1			1994-95
	4882 409	1			1996
2					BOLT
	4723 185	2			1994
	4720 567	2			1995-96
3					WASHER
	4723 223	2			1994
	4723 204	2			1995-96
4	4720 208	1			GASKET, EGR Pipe
5	4720 565	2			WASHER
6					SCREW
	4797 767	2			1994-95
	4864 537	2			1996
7					PIPE, EGR Connecting
	4797 722	1			1994
	4864 751	1			1995-96
8					GASKET, Manifold
	4778 965	1			1994
	4720 207	1			1995-96

MODEL CODES:

72=2 DR Wagon
74=4 DR Wagon
77=Open Body 93" Whlbase
78=Open Body 103" Whlbase - Export
T=2WD
J,N=4WD
U=4WD (RHD)

BODY STYLES:

YJ=Wrangler (4X4) "S"
Weangler (4X4) SE
Wrangler (4X4) Sahara
Wrangler (4X4) Renegade
XJ=Cherokee SE
Cherokee Sport
Cherokee Country
ZJ=Grand Cherokee SE
Grand Cherokee Laredo
Grand Cherolee Limited
ZG=Grand Cherokee European
Y1=Wrangler
X1=Cherokee
Z1=Grand Cherokee
KDX=Vehicles

AR = Use as Required - = Non Illustrated Part P.A.R. = Paint as Required

EGR SYSTEM 2.5L CARBURETED ENGINE X1 BODY
Figure 25-225

25–225

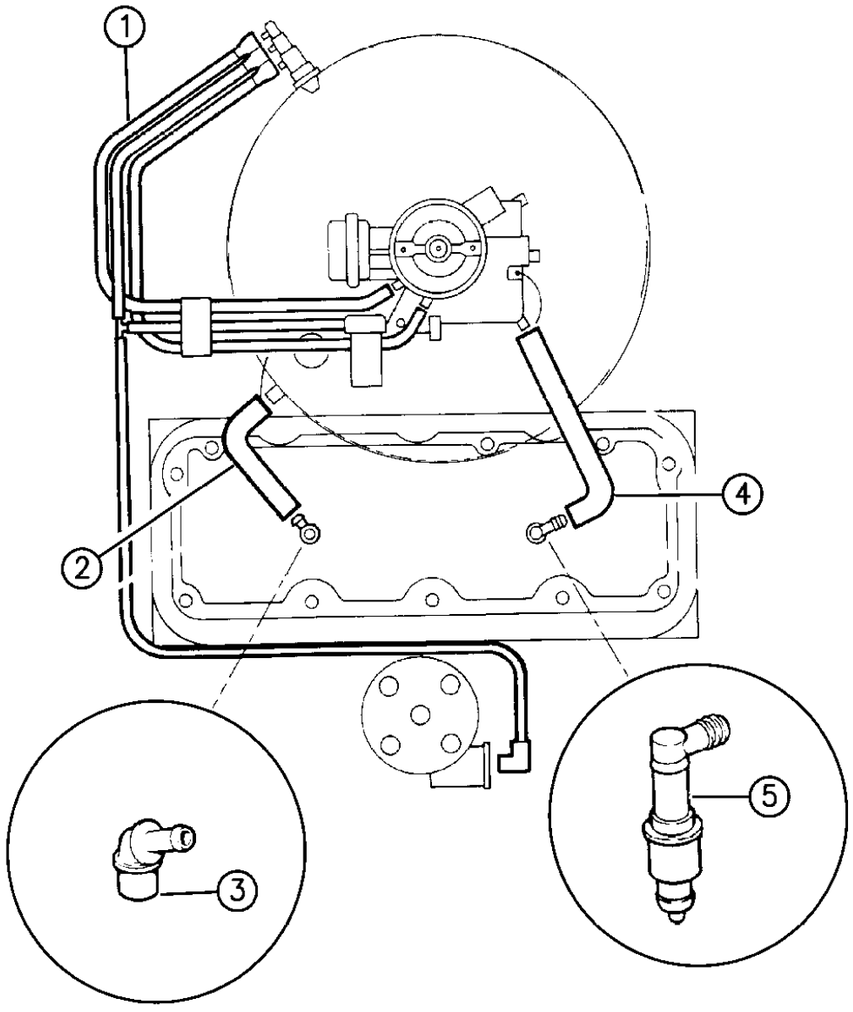

ITEM	PART NUMBER	QTY	BODY	MODEL	DESCRIPTION
1	5303 2269	1			HARNESS, Vacuum
2	5303 0528	1			HOSE, Vent
3					FITTING, Crankcase Vent ***
	5303 0497	1			1994-95
	5303 0497	1			1996, 2.5L Eng.
	5303 0991	1			1996, 4.0L Eng.
4	5303 0527	1			TUBE, CCV to Intake
5	3300 4175	1			CONNECTOR
-	5303 0540	1			SWITCH, 3 Port Vacuum

MODEL CODES:

72=2 DR Wagon
74=4 DR Wagon
77=Open Body 93" Whlbase
78=Open Body 103" Whlbase - Export
T=2WD
J,N=4WD
U=4WD (RHD)

BODY STYLES:

YJ=Wrangler (4X4) "S"
Weangler (4X4) SE
Wrangler (4X4) Sahara
Wrangler (4X4) Renegade

XJ=Cherokee SE
Cherokee Sport
Cherokee Country

ZJ=Grand Cherokee SE
Grand Cherokee Laredo
Grand Cherolee Limited
ZG=Grand Cherokee European

Y1=Wrangler
X1=Cherokee
Z1=Grand Cherokee
KDX=Vehicles

AR = Use as Required - = Non Illustrated Part P.A.R. = Paint as Required

« RETURN TO GROUP INDEX

EGR SYSTEM 5.2L ENGINE ZJ BODY
Figure 25-245

25-245

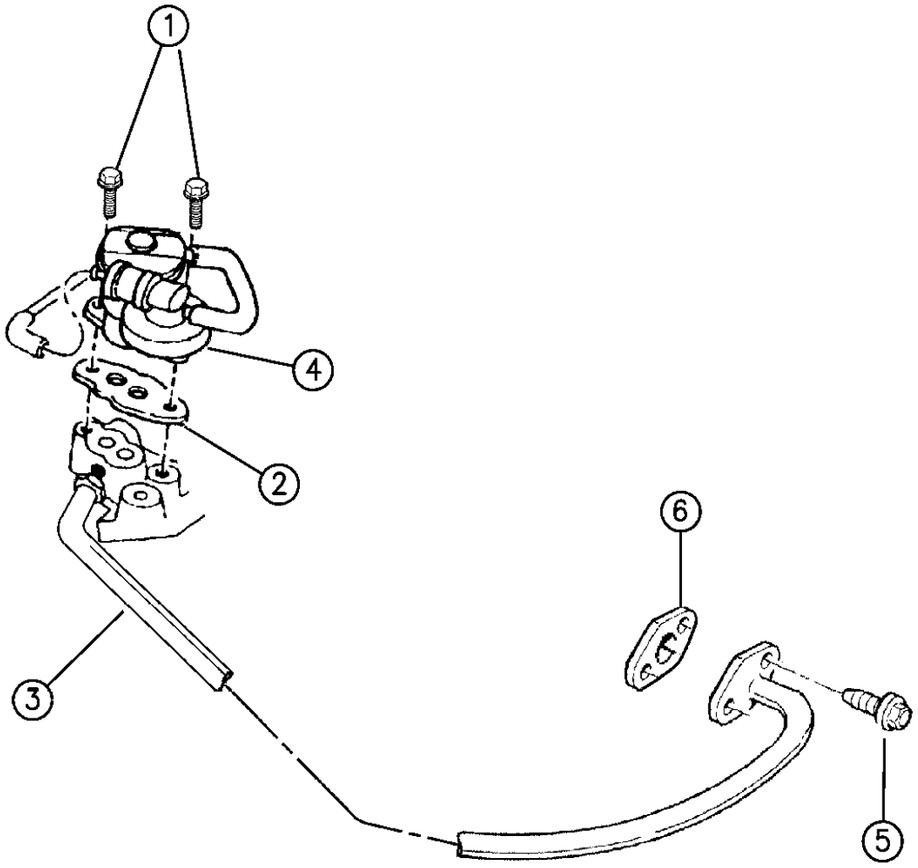

94J25 245

ITEM	PART NUMBER	QTY	BODY	MODEL	DESCRIPTION
1		2			BOLT, (Not Serviced)
2	4300 297	1			GASKET, EGR Valve
3	5301 0154	1			TUBE, EGR
4	4287 784	1			VALVE, EGR
5		2			SCREW, EGR Tube, (Not Serviced), (.312-18x.750)
6	5301 0000	1			GASKET, EGR Tube

MODEL CODES:

72=2 DR Wagon
74=4 DR Wagon
77=Open Body 93" Whlbase
78=Open Body 103" Whlbase - Export
T=2WD
J,N=4WD
U=4WD (RHD)

BODY STYLES:

YJ=Wrangler (4X4) "S"
Weangler (4X4) SE
Wrangler (4X4) Sahara
Wrangler (4X4) Renegade
XJ=Cherokee SE
Cherokee Sport
Cherokee Country
ZJ=Grand Cherokee SE
Grand Cherokee Laredo
Grand Cherolee Limited
ZG=Grand Cherokee European
Y1=Wrangler
X1=Cherokee
Z1=Grand Cherokee
KDX=Vehicles

AR = Use as Required - = Non Illustrated Part P.A.R. = Paint as Required

« RETURN TO GROUP INDEX

EGR SYSTEM 2.5L DIESEL ENGINE ZG BODY
Figure 25-250

25–250

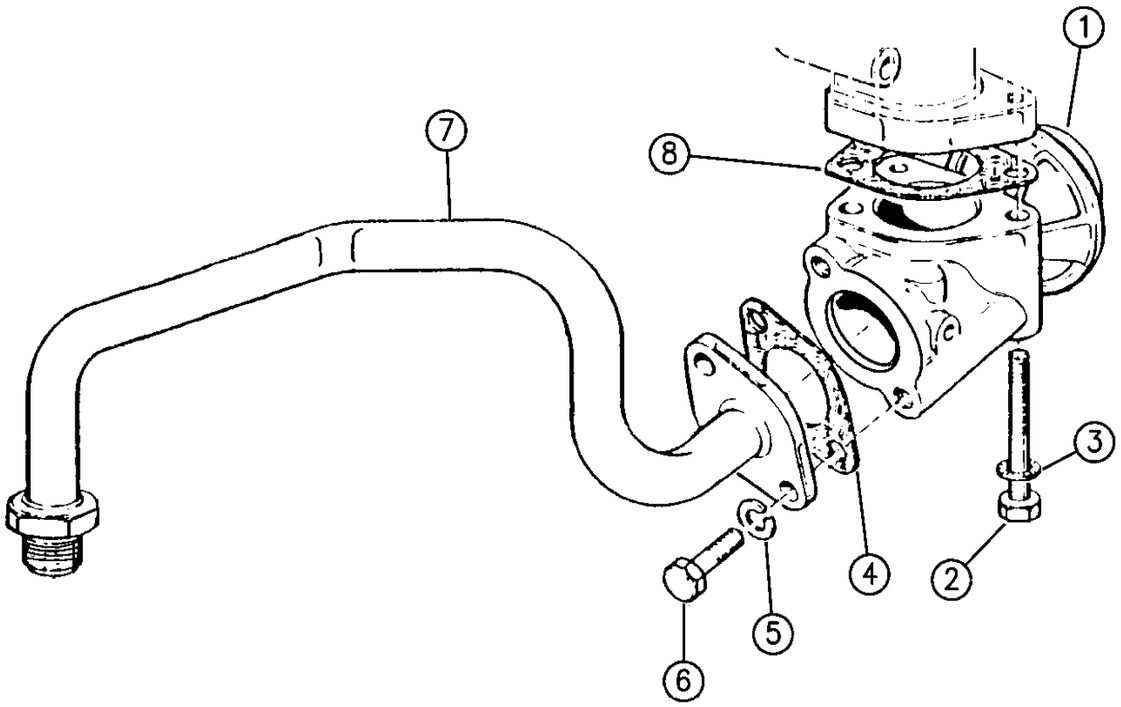

94J25 250

ITEM	PART NUMBER	QTY	BODY	MODEL	DESCRIPTION
1	4720 662	1			VALVE, EGR
2					BOLT
	4723 185	2			1995
	4863 749	2			1996
3	4723 223	2			WASHER
4	4720 208	1			GASKET, EGR Pipe
5	4723 165	2			WASHER
6	4723 187	2			SCREW
7	4797 722	1			PIPE, EGR Connecting
8	4778 965	1			GASKET, Manifold

MODEL CODES:

72=2 DR Wagon
74=4 DR Wagon
77=Open Body 93" Whlbase
78=Open Body 103" Whlbase - Export
T=2WD
J,N=4WD
U=4WD (RHD)

BODY STYLES:

YJ=Wrangler (4X4) "S"
Weangler (4X4) SE
Wrangler (4X4) Sahara
Wrangler (4X4) Renegade
XJ=Cherokee SE
Cherokee Sport
Cherokee Country
ZJ=Grand Cherokee SE
Grand Cherokee Laredo
Grand Cherolee Limited
ZG=Grand Cherokee European
Y1=Wrangler
X1=Cherokee
Z1=Grand Cherokee
KDX=Vehicles

AR = Use as Required - = Non Illustrated Part P.A.R. = Paint as Required

EGR SYSTEM Z1 BODY
Figure 25-255

25-255

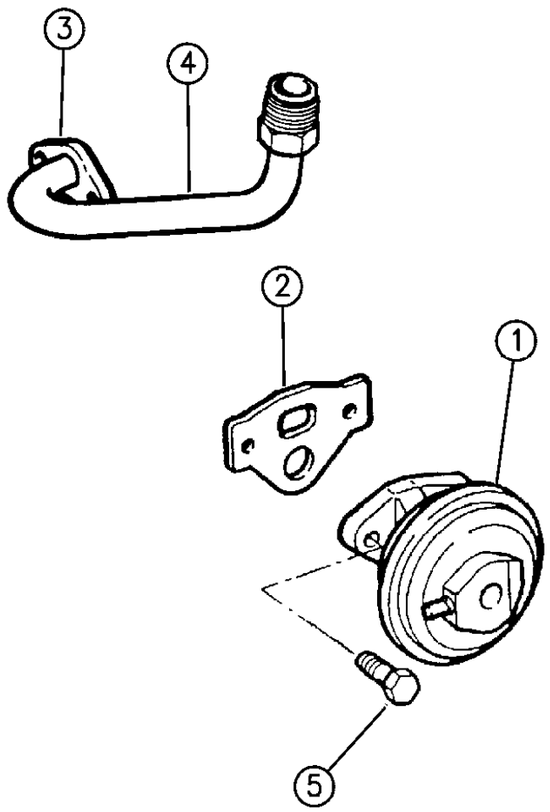

ITEM	PART NUMBER	QTY	BODY	MODEL	DESCRIPTION
1	4287 784	1			VALVE, EGR
2	4300 297	1			GASKET, EGR Valve
3	5301 0000	1			GASKET, EGR Tube
4	5301 0154	1			TUBE, EGR
5		2			SCREW, (Not Serviced)

MODEL CODES:

72=2 DR Wagon
74=4 DR Wagon
77=Open Body 93" Whlbase
78=Open Body 103" Whlbase - Export
T=2WD
J,N=4WD
U=4WD (RHD)

BODY STYLES:

YJ=Wrangler (4X4) "S"
Weangler (4X4) SE
Wrangler (4X4) Sahara
Wrangler (4X4) Renegade
XJ=Cherokee SE
Cherokee Sport
Cherokee Country
ZJ=Grand Cherokee SE
Grand Cherokee Laredo
Grand Cherolee Limited
ZG=Grand Cherokee European
Y1=Wrangler
X1=Cherokee
Z1=Grand Cherokee
KDX=Vehicles

AR = Use as Required - = Non Illustrated Part P.A.R. = Paint as Required

« RETURN TO GROUP INDEX

VACUUM CANISTER YJ BODY
Figure 25-310

25-310A

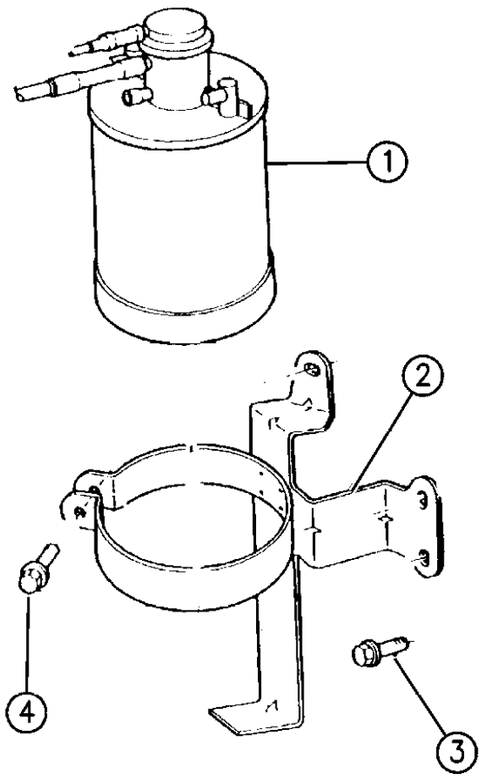

94J25 310A

ITEM	PART NUMBER	QTY	BODY	MODEL	DESCRIPTION
1	5300 9641	1			CANISTER, Vacuum
	4192 074	1			CAP, Dust
	3733 285	1			CAP, Vent Nipple
2	5300 9759	1			BRACKET, Canister
3	6022 202	3			SCREW
4	J942 0882	1			SCREW

MODEL CODES:

72=2 DR Wagon
74=4 DR Wagon
77=Open Body 93" Whlbase
78=Open Body 103" Whlbase - Export
T=2WD
J,N=4WD
U=4WD (RHD)

BODY STYLES:

YJ=Wrangler (4X4) "S"
Weangler (4X4) SE
Wrangler (4X4) Sahara
Wrangler (4X4) Renegade
XJ=Cherokee SE
Cherokee Sport
Cherokee Country
ZJ=Grand Cherokee SE
Grand Cherokee Laredo
Grand Cherolee Limited
ZG=Grand Cherokee European
Y1=Wrangler
X1=Cherokee
Z1=Grand Cherokee
KDX=Vehicles

AR = Use as Required - = Non Illustrated Part P.A.R. = Paint as Required

VACUUM CANISTER 2.5L, 4.0L GAS AND 2.1L DIESEL ENGINE
Figure 25-330

25-330B

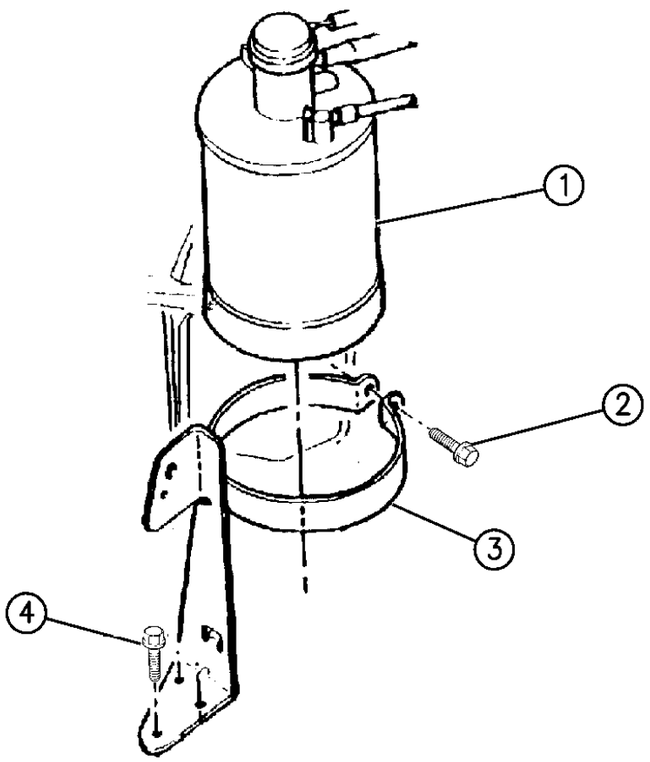

94J25 330B

ITEM	PART NUMBER	QTY	BODY	MODEL	DESCRIPTION
1	5300 9641	1			CANISTER, Vacuum
-	4192 074	1			CAP, Dust
-	3733 285	1			CAP, Vent Nipple
2	J942 0882	1			SCREW
3	5300 7836	1			BRACKET, Canister
4	J400 1701	3			SCREW

MODEL CODES:

72=2 DR Wagon
74=4 DR Wagon
77=Open Body 93" Whlbase
78=Open Body 103" Whlbase - Export
T=2WD
J,N=4WD
U=4WD (RHD)

BODY STYLES:

YJ=Wrangler (4X4) "S"
Weangler (4X4) SE
Wrangler (4X4) Sahara
Wrangler (4X4) Renegade

XJ=Cherokee SE
Cherokee Sport
Cherokee Country

ZJ=Grand Cherokee SE
Grand Cherokee Laredo
Grand Cherolee Limited
ZG=Grand Cherokee European

Y1=Wrangler
X1=Cherokee
Z1=Grand Cherokee
KDX=Vehicles

AR = Use as Required - = Non Illustrated Part P.A.R. = Paint as Required

« RETURN TO GROUP INDEX

VACUUM CANISTER 4.0L ENGINE XJ BODY, RHD
Figure 25-340

25-340A

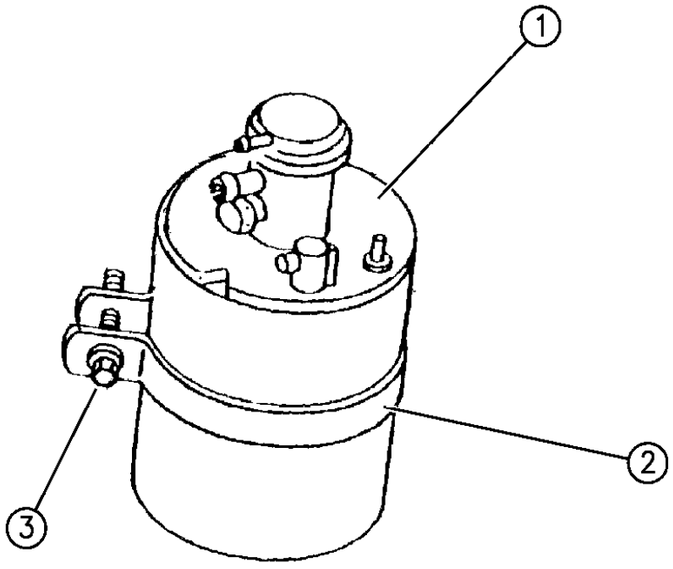

94J25 340A

ITEM	PART NUMBER	QTY	BODY	MODEL	DESCRIPTION
1	5300 9641	1			CANISTER, Vacuum
2	5303 0298	1			BRACKET, Canister
3	J942 0882	1			SCREW
-	6033 560	3			NUT

MODEL CODES:

72=2 DR Wagon
74=4 DR Wagon
77=Open Body 93" Whlbase
78=Open Body 103" Whlbase - Export
T=2WD
J,N=4WD
U=4WD (RHD)

BODY STYLES:

YJ=Wrangler (4X4) "S"
Weangler (4X4) SE
Wrangler (4X4) Sahara
Wrangler (4X4) Renegade
XJ=Cherokee SE
Cherokee Sport
Cherokee Country
ZJ=Grand Cherokee SE
Grand Cherokee Laredo
Grand Cherolee Limited
ZG=Grand Cherokee European
Y1=Wrangler
X1=Cherokee
Z1=Grand Cherokee
KDX=Vehicles

AR = Use as Required - = Non Illustrated Part P.A.R. = Paint as Required

« RETURN TO GROUP INDEX

VACUUM CANISTER ZJ BODY
Figure 25-350

25-350A

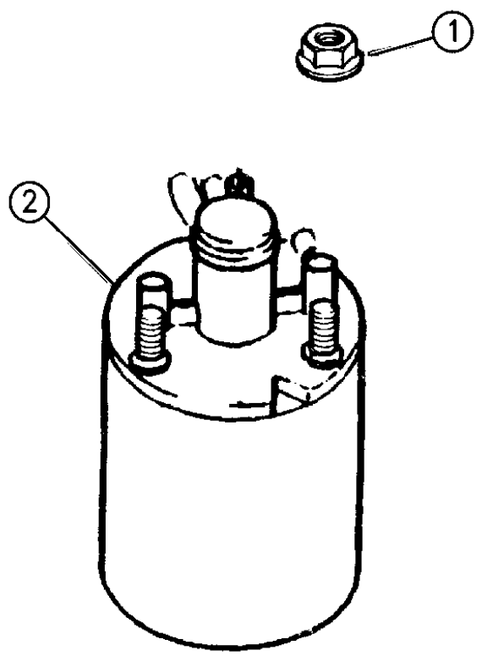

94J25 350

ITEM	PART NUMBER	QTY	BODY	MODEL	DESCRIPTION
1	6500 284	3			NUT
2					CANISTER, Vacuum
					1994-95
	5303 0500	1			Federal, Canada, (Round), (4 Port)
	4669 128	1			Calif., (Square)
					1996
	4601 673	1			Up To 2-29-96
	5303 0837	1			After 2-29-96
-	4192 074	1			CAP, Dust
-	3733 285	1			CAP, Vent Nipple
-	4241 618	1			CAP, Vacuum, (3/8)
-	5300 8085	1			FILTER, Charcoal, Calif.

MODEL CODES:

72=2 DR Wagon
74=4 DR Wagon
77=Open Body 93" Whlbase
78=Open Body 103" Whlbase - Export
T=2WD
J,N=4WD
U=4WD (RHD)

BODY STYLES:

YJ=Wrangler (4X4) "S"
Weangler (4X4) SE
Wrangler (4X4) Sahara
Wrangler (4X4) Renegade

XJ=Cherokee SE
Cherokee Sport
Cherokee Country

ZJ=Grand Cherokee SE
Grand Cherokee Laredo
Grand Cherolee Limited
ZG=Grand Cherokee European

Y1=Wrangler
X1=Cherokee
Z1=Grand Cherokee
KDX=Vehicles

AR = Use as Required - = Non Illustrated Part P.A.R. = Paint as Required

« RETURN TO GROUP INDEX

EMISSION CONTROL VACUUM HARNESS 2.5L ENGINE YJ BODY
Figure 25-410

25-410

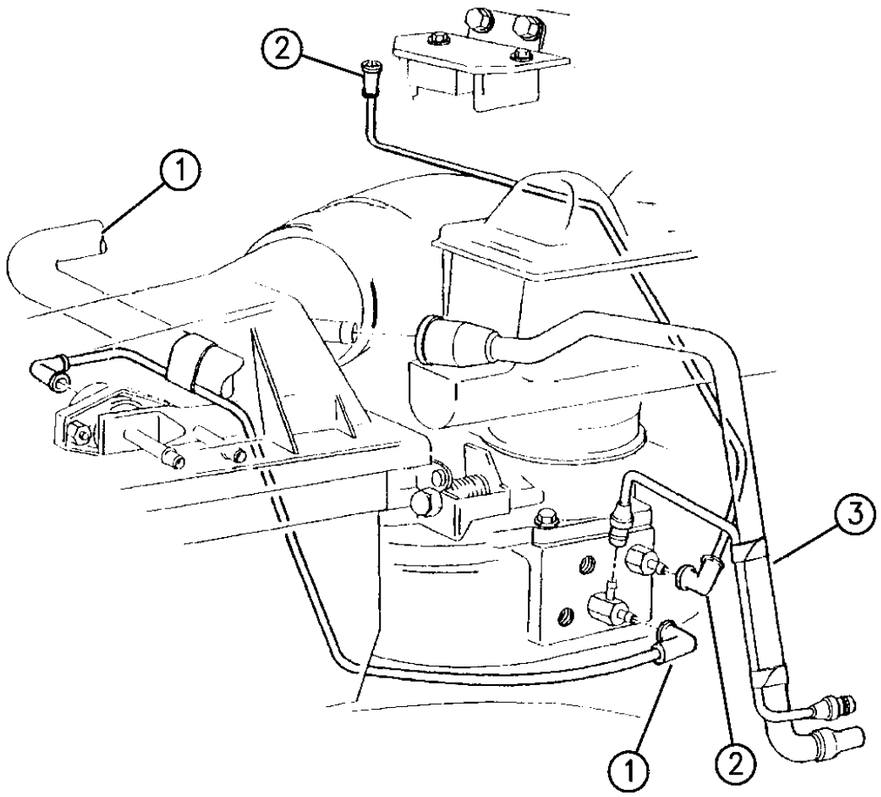

94J25 410

ITEM	PART NUMBER	QTY	BODY	MODEL	DESCRIPTION
1	5303 0189	1			TUBE, Crankcase/Fuel Regulator
2	5300 6226	1			TUBE, Map Sensor
3					TUBE
	5303 0478	1			Manifold Vacuum to Canister Purge
	5303 0479	1			Air Cleaner to Canister Purge
-	5303 0003	2			CONNECTOR, Straight

MODEL CODES:

72=2 DR Wagon
74=4 DR Wagon
77=Open Body 93" Whlbase
78=Open Body 103" Whlbase - Export
T=2WD
J,N=4WD
U=4WD (RHD)

BODY STYLES:

YJ=Wrangler (4X4) "S"
Weangler (4X4) SE
Wrangler (4X4) Sahara
Wrangler (4X4) Renegade
XJ=Cherokee SE
Cherokee Sport
Cherokee Country
ZJ=Grand Cherokee SE
Grand Cherokee Laredo
Grand Cherolee Limited
ZG=Grand Cherokee European
Y1=Wrangler
X1=Cherokee
Z1=Grand Cherokee
KDX=Vehicles

AR = Use as Required - = Non Illustrated Part P.A.R. = Paint as Required

EMISSION CONTROL VACUUM HARNESS 4.0L ENGINE YJ BODY
Figure 25-420

25–420

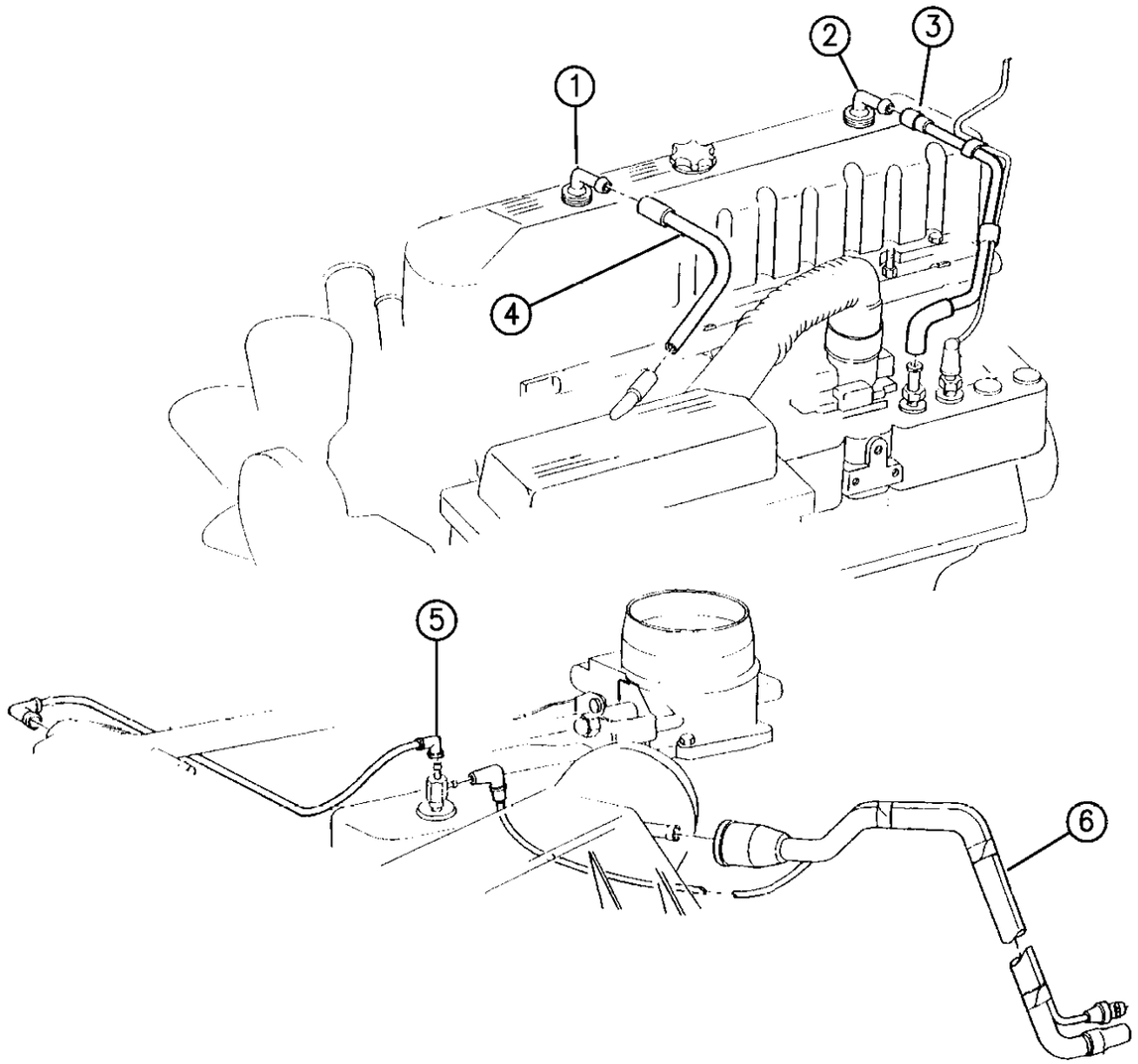

94J25 420

ITEM	PART NUMBER	QTY	BODY	MODEL	DESCRIPTION
1	5303 0497	1			TUBE, w/Fitting, w/o Orfice
2	5303 0495	1			TUBE, w/Fitting, w/Orfice
3	5300 6227	1			TUBE, Map Sensor/CCV to Manifold
4	5300 6237	1			TUBE, Vent to Air Cleaner
5	5300 6226	1			TUBE, Map Sensor
6					TUBE
	5303 0473	1			Air Cleaner to Canister Purge
	5303 0474	1			Manifold to Canister Purge
-	5303 0003	1			CONNECTOR, Straight

MODEL CODES:

72=2 DR Wagon
74=4 DR Wagon
77=Open Body 93" Whlbase
78=Open Body 103" Whlbase - Export
T=2WD
J,N=4WD
U=4WD (RHD)

BODY STYLES:

YJ=Wrangler (4X4) "S"
Weangler (4X4) SE
Wrangler (4X4) Sahara
Wrangler (4X4) Renegade

XJ=Cherokee SE
Cherokee Sport
Cherokee Country

ZJ=Grand Cherokee SE
Grand Cherokee Laredo
Grand Cherolee Limited
ZG=Grand Cherokee European

Y1=Wrangler
X1=Cherokee
Z1=Grand Cherokee
KDX=Vehicles

AR = Use as Required - = Non Illustrated Part P.A.R. = Paint as Required

« RETURN TO GROUP INDEX

EMISSION CONTROL VACUUM HARNESS 2.5L, 4.0L GAS AND 2.1L DIESEL ENGINE XJ BODY
Figure 25-430

25-430A

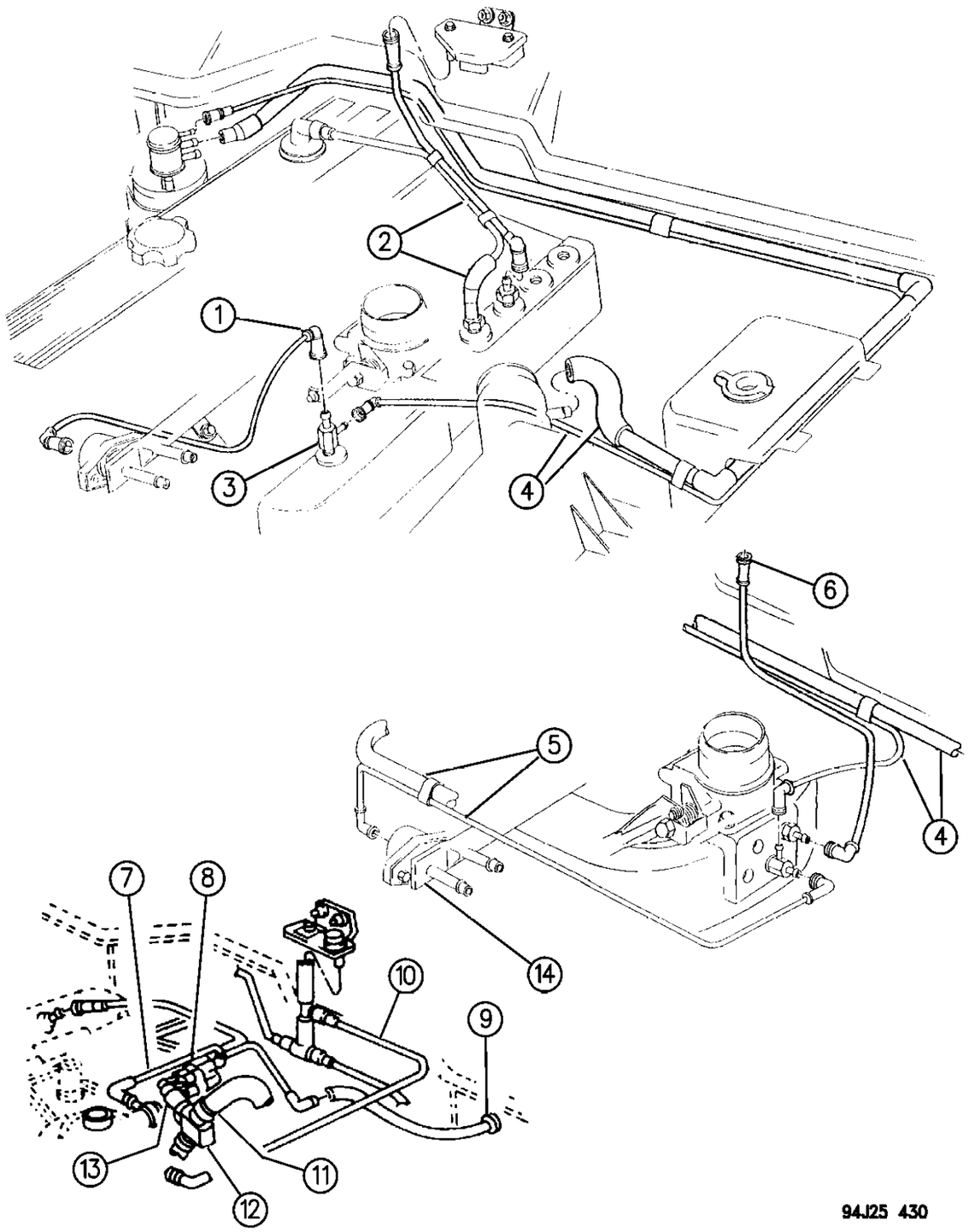

ITEM	PART NUMBER	QTY	BODY	MODEL	DESCRIPTION
1	5300 6235	1			TUBE, Fuel Regulator to Manifold, 4.0L Eng.
2	5300 6229	1			TUBE, Map Sensor/CCV Vent to Manifold, 4.0L Eng.
3	5300 4523	1			FITTING, Vacuum ***
4					TUBE
	5303 0336	1			Canister Purge, 2.5L Eng.
	5303 0253	1			Canister Purge, 4.0L Eng.
	5303 0420	1			Manifold Vacuum to Canister, 2.5L Eng.
	5303 0252	1			Air Cleaner to Canister, 4.0L Eng.
					CONNECTOR
	5303 0006	AR			90 Degree Elbow
	5303 0003	AR			Straight
5	5303 0189	1			TUBE, CCV to Fuel Pressure Regulator, 2.5L Eng.
6					TUBE, Map Sensor/CCV to Manifold, 2.5L Eng.
	5300 6228	1			1994-95
	4854 072	1			1996
7	5300 1927	1			HARNESS, Vacuum, 2.1L Diesel Eng.
8	J323 5265	1			CONNECTOR, 3 Port, 2.1L Diesel Eng.
9	5600 1448	1			HOSE, Boost Gauge, 2.1L Diesel Eng.
10	5303 1101	1			HARNESS, Vacuum, 2.1L Diesel Eng.
11	6502 081	2			CLAMP
12	5300 1859	1			TUBE, Turbo Cut-Off Switch, 2.1L Diesel Eng.
13	5300 1747	1			SWITCH, Thermo Vacuum Cut-Off, 2.1L Diesel Eng.
14	5227 635	1			SOLENOID, Vacuum, 2.5L Eng., w/Carburetor
	5227 034	1			BRACKET, Solenoid, 2.5L Eng., w/Carburetor
-	4549 209	1			VALVE, Check
-	4669 475	1			SOLENIOD, Purge, w/2.5 and 4.0l Eng. ***

MODEL CODES:

72=2 DR Wagon
74=4 DR Wagon
77=Open Body 93" Whlbase
78=Open Body 103" Whlbase - Export
T=2WD
J,N=4WD
U=4WD (RHD)

BODY STYLES:

YJ=Wrangler (4X4) "S"
Weangler (4X4) SE
Wrangler (4X4) Sahara
Wrangler (4X4) Renegade
XJ=Cherokee SE
Cherokee Sport
Cherokee Country
ZJ=Grand Cherokee SE
Grand Cherokee Laredo
Grand Cherolee Limited
ZG=Grand Cherokee European
Y1=Wrangler
X1=Cherokee
Z1=Grand Cherokee
KDX=Vehicles

AR = Use as Required - = Non Illustrated Part P.A.R. = Paint as Required

« RETURN TO GROUP INDEX

EMISSION CONTROL VACUUM HARNESS 4.0L ENGINE XJ BODY, RHD
Figure 25-440

25-440

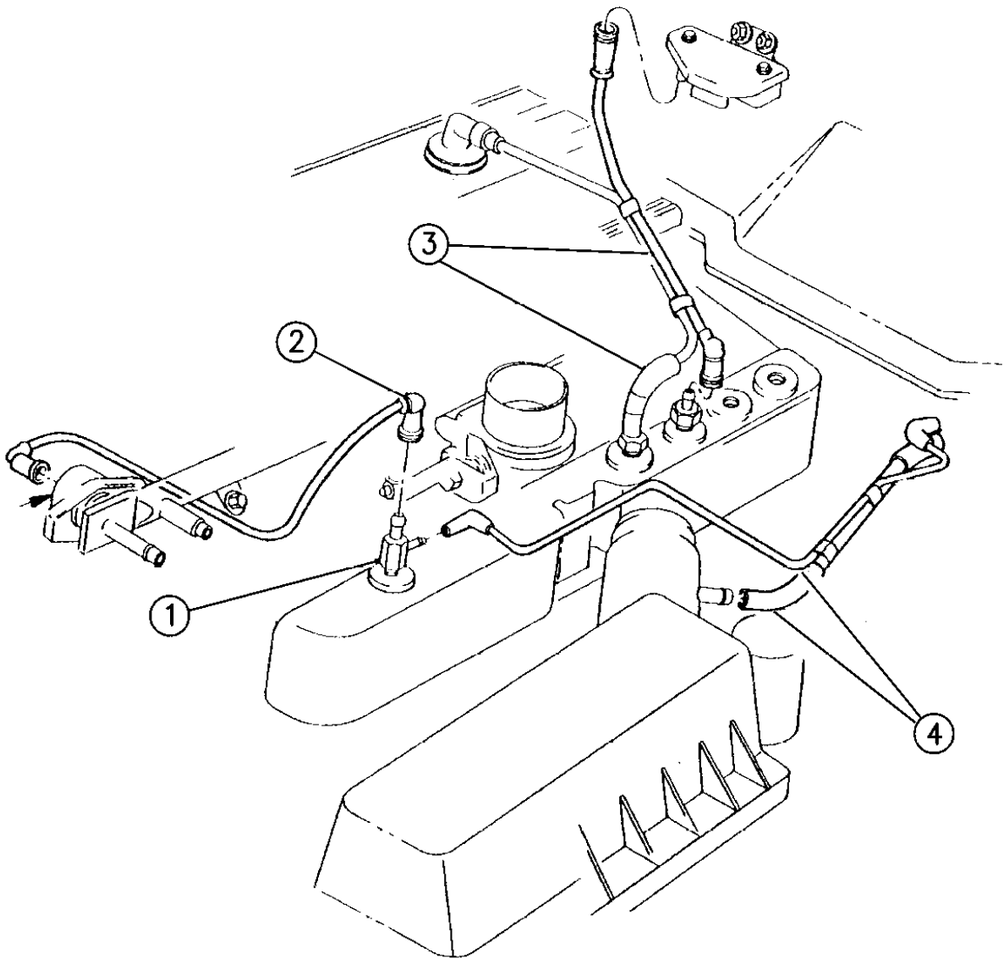

94J25 440

ITEM	PART NUMBER	QTY	BODY	MODEL	DESCRIPTION
	5303 0245	1			HARNESS, Purge
1	5300 4523	1			FITTING, Vacuum ***
2	5300 6235	1			TUBE, Fuel Regulator to Manifold
3	5300 6229	1			TUBE, Map Sensor/CCV to Manifold
4					TUBE
	5303 0246	1			Canister Purge to Air Cleaner
	5303 0247	1			Manifold Vacuum to Canister
-					CONNECTOR
-	5303 0238	1			Vacuum
-	5303 0006	1			90 Degree Elbow
-	4549 209	1			VALVE, Check

MODEL CODES:

72=2 DR Wagon
74=4 DR Wagon
77=Open Body 93" Whlbase
78=Open Body 103" Whlbase - Export
T=2WD
J,N=4WD
U=4WD (RHD)

BODY STYLES:

YJ=Wrangler (4X4) "S"
Weangler (4X4) SE
Wrangler (4X4) Sahara
Wrangler (4X4) Renegade
XJ=Cherokee SE
Cherokee Sport
Cherokee Country
ZJ=Grand Cherokee SE
Grand Cherokee Laredo
Grand Cherolee Limited
ZG=Grand Cherokee European
Y1=Wrangler
X1=Cherokee
Z1=Grand Cherokee
KDX=Vehicles

AR = Use as Required - = Non Illustrated Part P.A.R. = Paint as Required

EMISSION CONTROL VACUUM HARNESS 2.5L DIESEL ENGINE XJ BODY
Figure 25-445

25-445

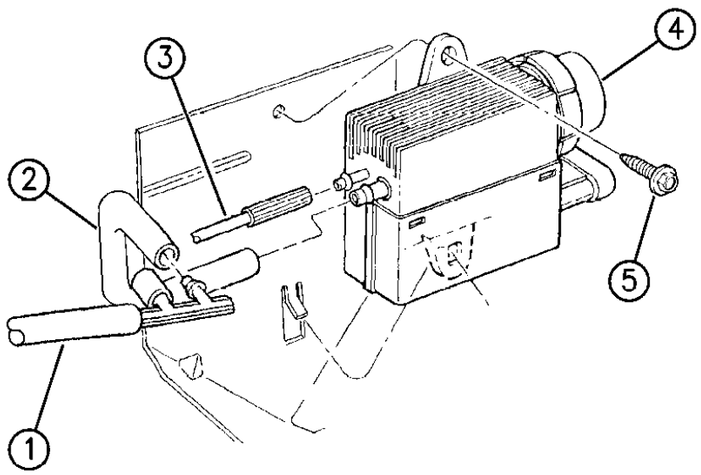

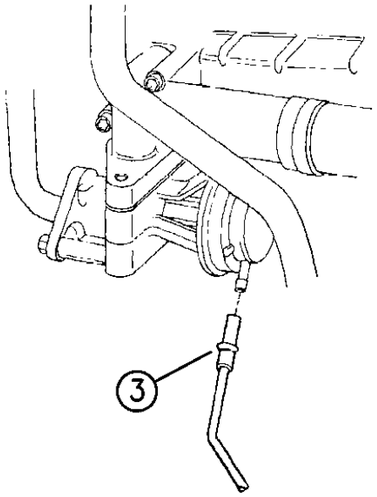

ITEM	PART NUMBER	QTY	BODY	MODEL	DESCRIPTION
1					HARNESS, Vacuum
	5503 6140	1			Up To 6-1-95
	5503 7117	1			After 6-1-95
2					TUBE, Vacuum Regulator
	5303 0662	1			1994
	5303 0777	1			1995-96
3	5303 1542	1			TUBE, EGR to Regulator
4	5602 7094	1			MODULATOR, Vacuum ***
5	6034 959	1			SCREW
-					VALVE, Vacuum Check, w/o Orfice
-	5503 6068	1			1994-95
-	5503 6541	1			1996

MODEL CODES:

72=2 DR Wagon
74=4 DR Wagon
77=Open Body 93" Whlbase
78=Open Body 103" Whlbase - Export
T=2WD
J,N=4WD
U=4WD (RHD)

BODY STYLES:

YJ=Wrangler (4X4) "S"
Weangler (4X4) SE
Wrangler (4X4) Sahara
Wrangler (4X4) Renegade
XJ=Cherokee SE
Cherokee Sport
Cherokee Country
ZJ=Grand Cherokee SE
Grand Cherokee Laredo
Grand Cherolee Limited
ZG=Grand Cherokee European
Y1=Wrangler
X1=Cherokee
Z1=Grand Cherokee
KDX=Vehicles

94J25 445

AR = Use as Required - = Non Illustrated Part P.A.R. = Paint as Required

VACUUM PUMP 2.5L DIESEL ENGINE XJ BODY
Figure 25-447

25-447

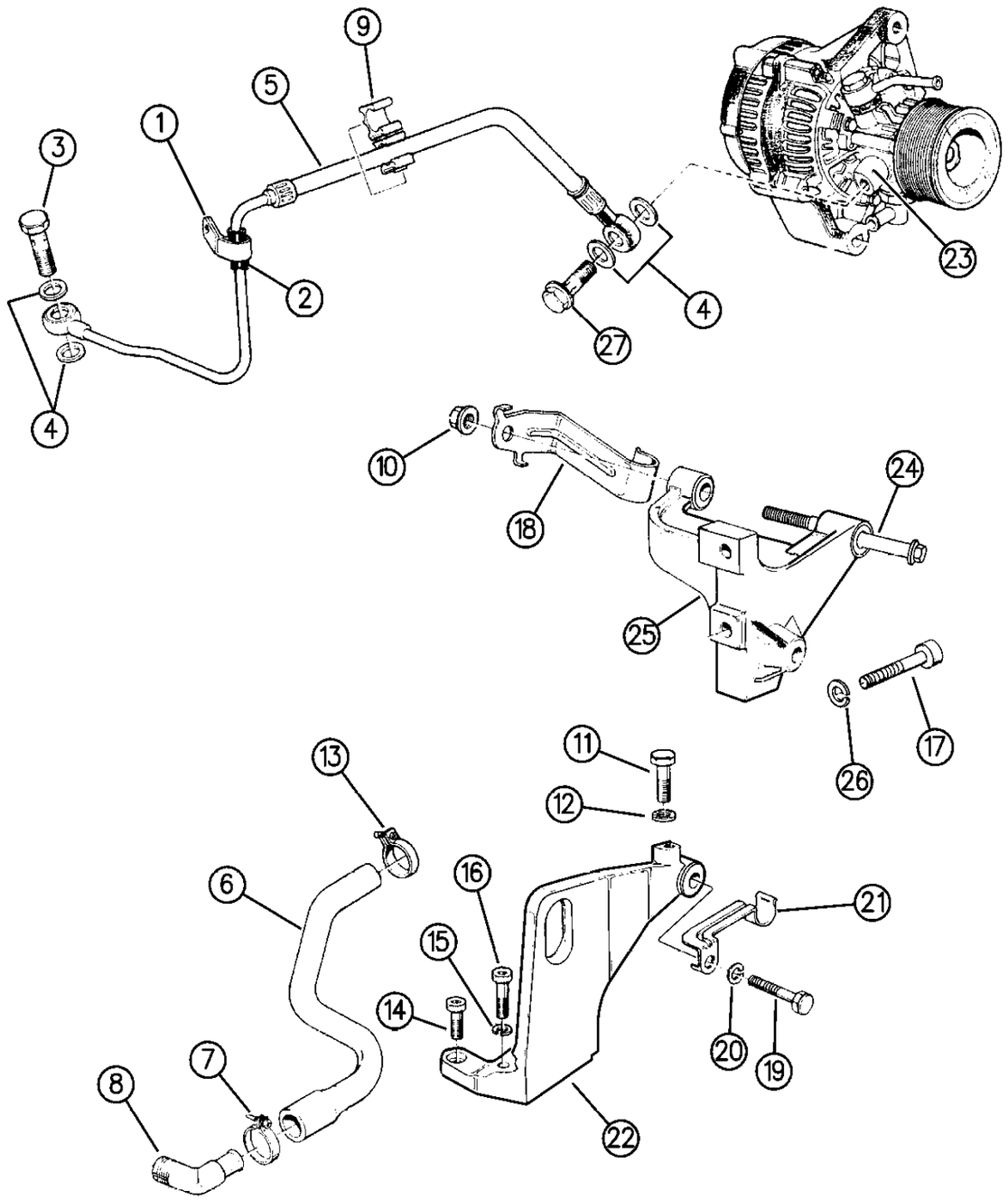

ITEM	PART NUMBER	QTY	BODY	MODEL	DESCRIPTION
1	4796 035	1			CLIP, Pipe
2	5303 0777	1			SLEEVE, Hose Clip
3	4762 717	1			BOLT, Banjo
4	4720 713	4			WASHER
5	4796 402	1			PIPE, Oil Supply
6	4796 036	1			PIPE, Oil Drain
7	4773 713	1			CLIP
8	4773 709	1			ADAPTOR, Turbo Oil Return Pipe ***
9	4796 037	2			CLIP
10	4796 038	1			NUT
11	4723 187	1			BOLT
12	4723 223	1			WASHER
13	4723 177	1			CLIP
14	4720 684	1			BOLT
15	4720 688	2			WASHER
16	4797 768	2			BOLT
17		2			BOLT, (Not Serviced)
18	4796 403	1			CLIP, Lower Hose
19	4798 310	1			BOLT
20	4723 165	1			WASHER
21	4796 404	1			CLIP, Upper Hose
22	4796 040	1			BRACKET, Upper Vacuum Pump
23	4796 041	1			PUMP, Vacuum
24	4796 042	1			SCREW
25	4796 043	1			BRACKET, Lower Pump
26		1			WASHER, (Not Serviced)
27		1			BOLT, (Not Serviced)

MODEL CODES:

72=2 DR Wagon
74=4 DR Wagon
77=Open Body 93" Whlbase
78=Open Body 103" Whlbase - Export
T=2WD
J,N=4WD
U=4WD (RHD)

BODY STYLES:

YJ=Wrangler (4X4) "S"
Weangler (4X4) SE
Wrangler (4X4) Sahara
Wrangler (4X4) Renegade

XJ=Cherokee SE
Cherokee Sport
Cherokee Country

ZJ=Grand Cherokee SE
Grand Cherokee Laredo
Grand Cherolee Limited
ZG=Grand Cherokee European

Y1=Wrangler
X1=Cherokee
Z1=Grand Cherokee
KDX=Vehicles

AR = Use as Required - = Non Illustrated Part P.A.R. = Paint as Required

« RETURN TO GROUP INDEX

EMISSION CONTROL VACUUM HARNESS 4.0L ENGINE ZJ BODY
Figure 25-450

25-450A

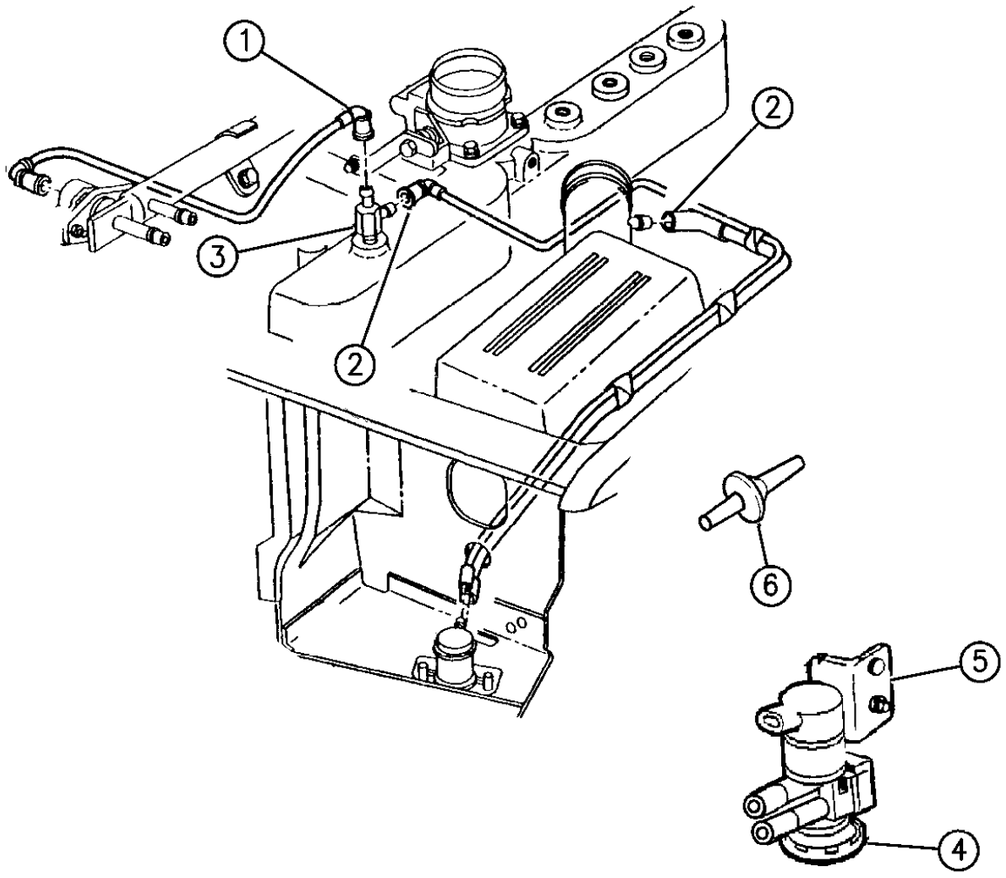

94J25 450

ITEM	PART NUMBER	QTY	BODY	MODEL	DESCRIPTION
1	5300 6235	1			TUBE, Fuel Regulator/Manifold Vacuum
2					HARNESS, Canister Purge
	5303 1104	1			1994-95
					1996, Federal, Canada
	5303 0631	1			Up To 2-29-96
	5303 0836	1			After 2-29-96
	5303 0835	1			1996, Calif.
	5305 4421	1		ZG	RHD
3	5300 4523	1			FITTING, Vacuum ***
4					SOLENOID, Duty Cycle Purge
	4669 475	1			1994-95
	4854 083	1			1996, Up To 2-29-96, w/Bracket
	4669 475	1			1996, After 2-29-96
5		1			BRACKET, Duty Cyle Purge Solenoid
	5602 7289	1			1994-95
		1			1996, Up To 2-29-96, (Serviced in Solenoid Assembly)
	4882 995	1			1996, After 2-29-96
6	4549 209	1			VALVE, Check

MODEL CODES:

72=2 DR Wagon
74=4 DR Wagon
77=Open Body 93" Whlbase
78=Open Body 103" Whlbase - Export
T=2WD
J,N=4WD
U=4WD (RHD)

BODY STYLES:

YJ=Wrangler (4X4) "S"
Weangler (4X4) SE
Wrangler (4X4) Sahara
Wrangler (4X4) Renegade
XJ=Cherokee SE
Cherokee Sport
Cherokee Country
ZJ=Grand Cherokee SE
Grand Cherokee Laredo
Grand Cherolee Limited
ZG=Grand Cherokee European
Y1=Wrangler
X1=Cherokee
Z1=Grand Cherokee
KDX=Vehicles

AR = Use as Required - = Non Illustrated Part P.A.R. = Paint as Required

EMISSION CONTROL VACUUM HARNESS 5.2L ENGINE ZJ BODY
Figure 25-460

25-460C

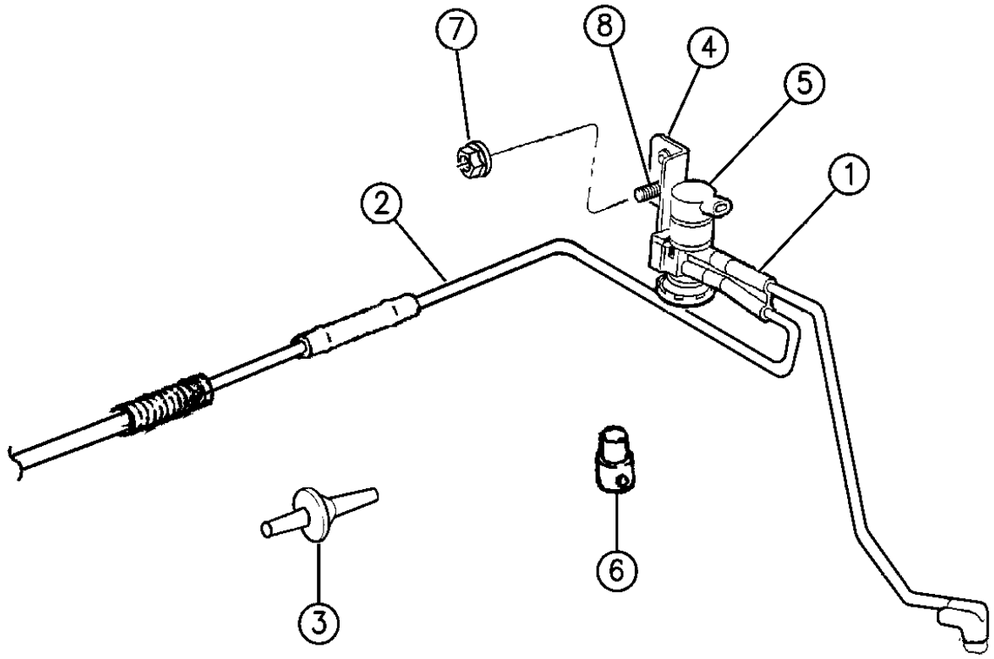

94J25 460

ITEM	PART NUMBER	QTY	BODY	MODEL	DESCRIPTION
1					HARNESS, Duty Cycle Purge
	5303 1103	1			1994-95
					1996
	5303 0886	1			Up To 1-22-96
	4854 146	1			After 1-22-96
2					HARNESS, Emission
	5300 8685	1			1994
	5303 0653	1			1995-96
3	4549 209	1			VALVE, Check
4					BRACKET, Duty Cycle Purge Solenoid
	5300 9283	1			1994-95
	4882 995	1			1996
5					SOLENOID, Duty Cycle Purge
	5227 635	1			1994-95
	4854 083	1			1996, Up To 2-29-96
	4669 475	1			1996, After 2-29-96
6	4458 158	1			FILTER, Solenoid
7	6500 284	1			NUT, w/Washer, (M6x1.00)
8		1			STUD, (Not Serviced), (M6x1.00/.250-14x51.50)

MODEL CODES:

72=2 DR Wagon
74=4 DR Wagon
77=Open Body 93" Whlbase
78=Open Body 103" Whlbase - Export
T=2WD
J,N=4WD
U=4WD (RHD)

BODY STYLES:

YJ=Wrangler (4X4) "S"
Weangler (4X4) SE
Wrangler (4X4) Sahara
Wrangler (4X4) Renegade
XJ=Cherokee SE
Cherokee Sport
Cherokee Country
ZJ=Grand Cherokee SE
Grand Cherokee Laredo
Grand Cherolee Limited
ZG=Grand Cherokee European
Y1=Wrangler
X1=Cherokee
Z1=Grand Cherokee
KDX=Vehicles

AR = Use as Required - = Non Illustrated Part P.A.R. = Paint as Required

VACUUM PUMP 2.5L DIESEL ENGINE ZG BODY
Figure 25-470

25–470

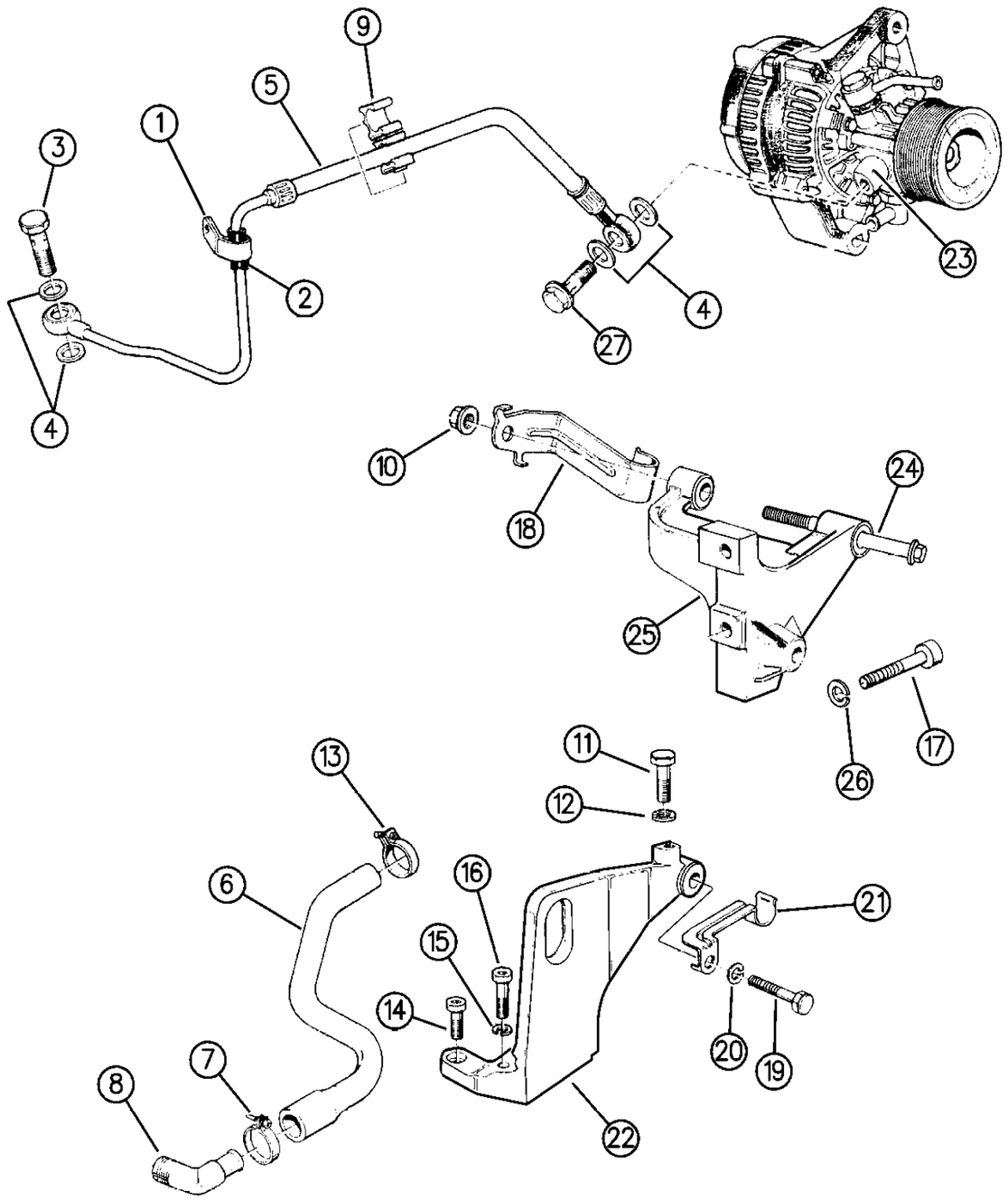

ITEM	PART NUMBER	QTY	BODY	MODEL	DESCRIPTION
1	4796 035	1			CLIP, Pipe
2	5303 0777	1			SLEEVE, Hose Clip
3	4762 717	1			BOLT, Banjo
4	4720 713	4			WASHER
5	4796 402	1			PIPE, Oil Supply
6	4796 036	1			PIPE, Oil Drain
7	4773 713	1			CLIP
8	4773 709	1			ADAPTOR, Turbo Oil Return Pipe ***
9	4796 037	2			CLIP
10	4796 038	1			NUT
11	4723 187	1			BOLT
12	4723 223	1			WASHER
13	4723 177	1			CLIP
14	4720 684	1			BOLT
15	4720 688	2			WASHER
16	4797 768	2			BOLT
17		2			BOLT, (Not Serviced)
18	4796 403	1			CLIP, Lower Hose
19	4798 310	1			BOLT
20	4723 165	1			WASHER
21	4796 404	1			CLIP, Upper Hose
22	4796 040	1			BRACKET, Upper Vacuum Pump
23	4796 041	1			PUMP, Vacuum
24	4796 042	1			SCREW
25	4796 043	1			BRACKET, Lower Pump
26		1			WASHER, (Not Serviced)
27		1			BOLT, (Not Serviced)

MODEL CODES:

72=2 DR Wagon
74=4 DR Wagon
77=Open Body 93" Whlbase
78=Open Body 103" Whlbase - Export
T=2WD
J,N=4WD
U=4WD (RHD)

BODY STYLES:

YJ=Wrangler (4X4) "S"
Weangler (4X4) SE
Wrangler (4X4) Sahara
Wrangler (4X4) Renegade

XJ=Cherokee SE
Cherokee Sport
Cherokee Country

ZJ=Grand Cherokee SE
Grand Cherokee Laredo
Grand Cherolee Limited
ZG=Grand Cherokee European

Y1=Wrangler
X1=Cherokee
Z1=Grand Cherokee
KDX=Vehicles

AR = Use as Required - = Non Illustrated Part P.A.R. = Paint as Required

« RETURN TO GROUP INDEX

INTERIOR TRIM GROUP CONTENT IYJ WRANGLER

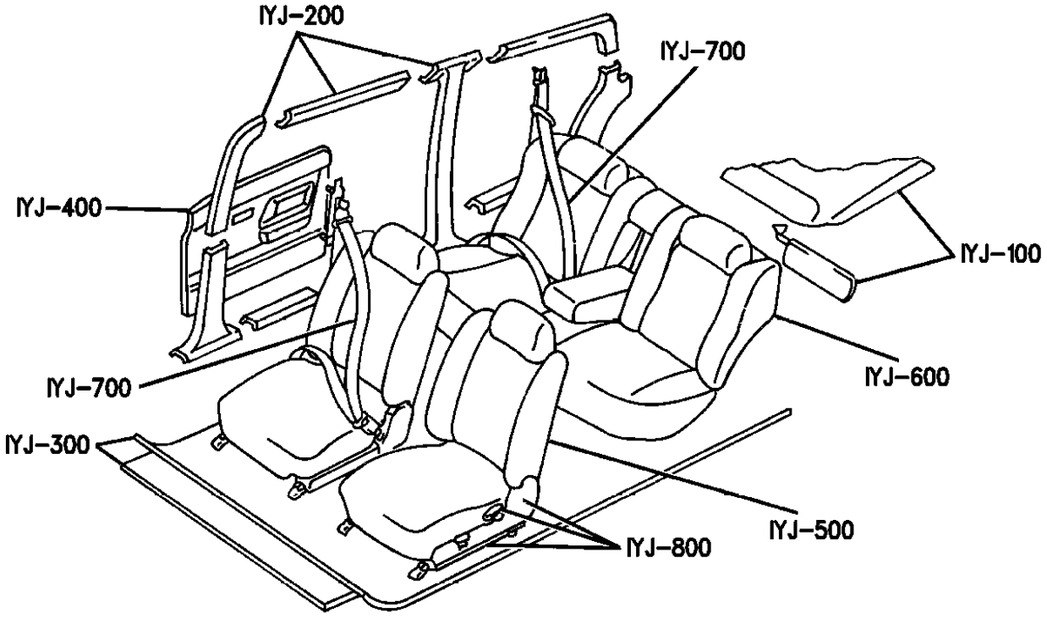

IYJ–100 HEADLINNING & VISORS 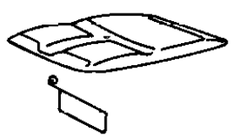	IYJ–200 PANEL,MLDS. SCUFF PLATE 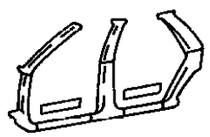	IYJ–300 CARPET,MAT & INSULATION 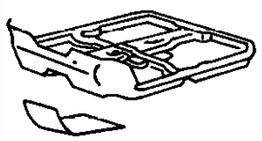	IYJ–300 FLOOR MAT & TONNEAU COVER 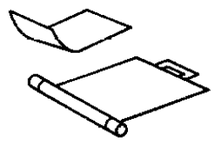
IYJ–400 DOOR TRIM FRONT & REAR 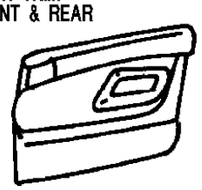	IYJ–500 FRONT SEAT	IYJ–600 REAR SEAT 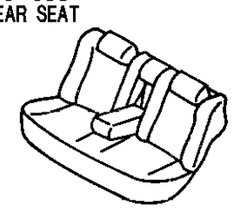	IYJ–700 SEAT BELT FRT. & REAR 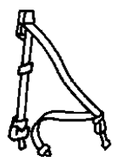
IYJ–800 ADJ. SHIELDS & RECLINER 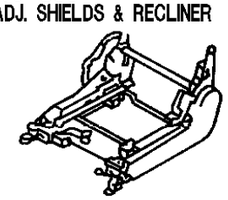	IYJ–900 STORAGE COMPARTMENT	IYJ–1000 LIFTGATE PANELS	

GROUP IYJ - INTERIOR TRIM WRANGLER (IYJ)

ILLUSTRATION TITLE — **GROUP-FIG. NO.**

TRIM CODES DEFINED
TRIM CODE DEFINED WRANGLER, YJ . . . . . Fig. IYJ-99

SUNVISORS
SUNVISORS WRANGLER - YJ . . . . . Fig. IYJ-105

CARPET, INSULATION AND TRIM PANELS
CARPETS AND INTERIOR TRIM PANELS WRANGLER - YJ . . . . . Fig. IYJ-305
INSULATION COWL AND HOOD WRANGLER - YJ . . . . . Fig. IYJ-310

DOOR TRIM PANELS
DOOR TRIM PANELS HALF HARD DOORS WRANGLER - YJ . . . . . Fig. IYJ-405
DOOR TRIM PANELS FULL HARD DOORS WRANGLER - YJ . . . . . Fig. IYJ-410

FRONT SEATS
SEAT ASSEMBLIES, SEAT COVERS AND SEAT TRACKS FRONT SEAT WRANGLER - YJ, 1994 . . . . . Fig. IYJ-505
SEAT ASSEMBLIES, SEAT COVERS AND SEAT TRACKS FRONT SEAT WRANGLER, YJ, 1995 . . . . . Fig. IYJ-510

REAR SEATS
SEAT ASSEMBLIES AND SEAT COVERS REAR SEAT WRANGLER - YJ, 1994 . . . . . Fig. IYJ-605
SEAT ASSEMBLIES, SEAT COVERS REAR SEAT WRANGLER, YJ, 1995 . . . . . Fig. IYJ-610

SEAT BELTS
SEAT BELTS WRANGLER - YJ . . . . . Fig. IYJ-710

ADJUSTERS, RISERS AND RECLINERS
SEAT ASSEMBLIES, SEAT COVERS AND SEAT TRACKS FRONT SEAT WRANGLER - YJ, 1994 . . . . . Fig. IYJ-810
SEAT ASSEMBLIES, SEAT COVERS AND SEAT TRACKS FRONT SEAT WRANGLER, YJ . . . . . Fig. IYJ-820

TRIM CODE DEFINED WRANGLER, YJ
Figure IYJ-99

IYJ–099

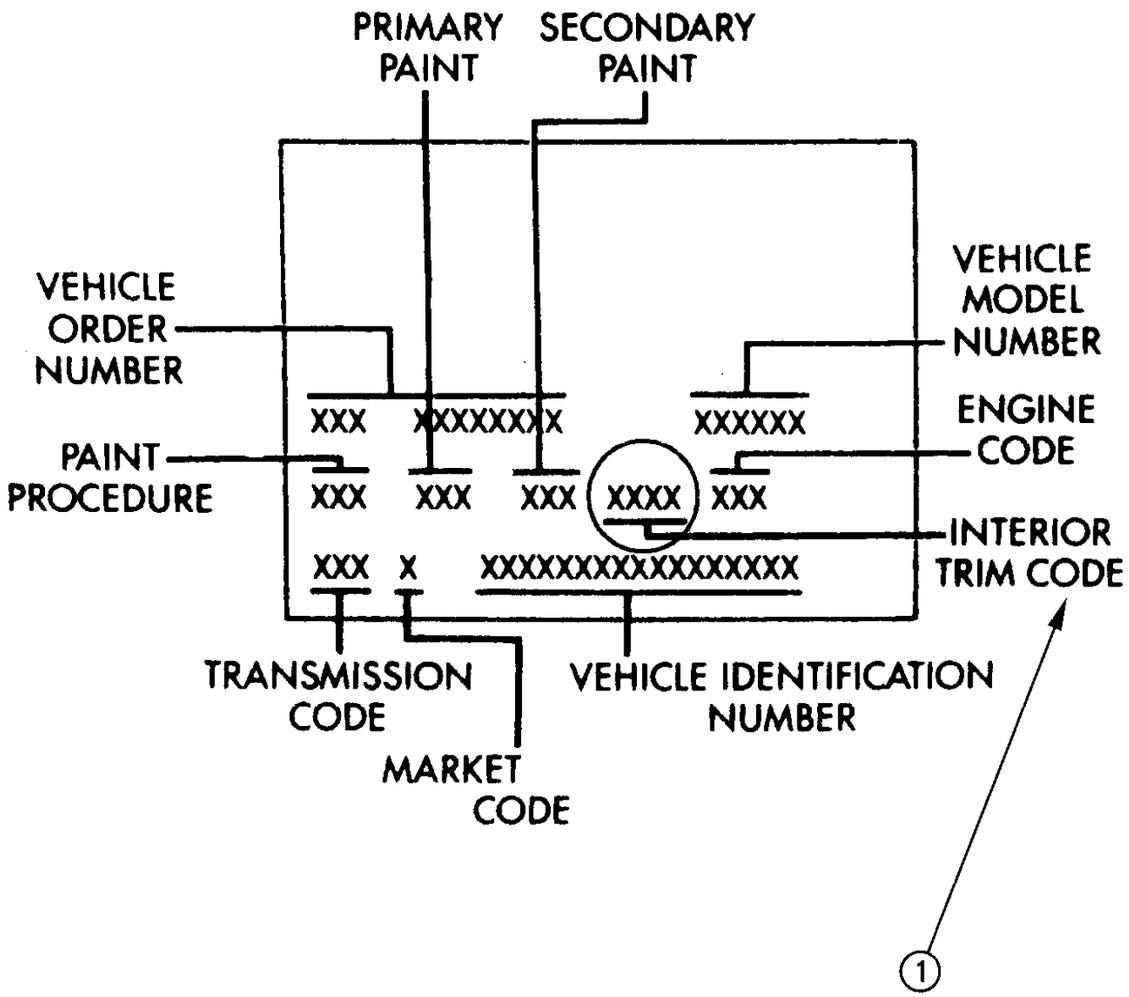

94J27 099

ITEM	PART NUMBER	QTY	BODY	MODEL	DESCRIPTION
NOTE: The body code plate is located on the left side of the dash panel in the engine compartment. e Adhesive #312.					
1					INTERIOR TRIM CODE (4 DIGET) ***
NOTE: THE FIRST TWO DIGITS OF THE CODE INDICATE THE SEAT STYLE. e Adhesive #312.					
T5--High back bucket seats w/reclining seat backs and cloth inserts. e Adhesive #312.					
C5-- High back bucket seats w/reclining seat backs and two color cloth inserts. e Adhesive #312.					
LJ-- High back bucket seats w/reclining seat backs and leather inserts. (Europe only) e Adhesive #312.					
P6-- High back bucket seat w/reclining seat backs and vinyl inserts. e Adhesive #312.					
L6-- High back bucket seats w/non-reclining seat backs and vinyl inserts. (A rear seat is not available w/L6-- trim code.) e Adhesive #312.					
NOTE: The LAST TWO DIGITS OF THE CODE INDICATE THE INTERIOR COLOR. e Adhesive #312.					
--XS = Charcoal e Adhesive #312.					
--Y6 = Dark Sand e Adhesive #312.					
--TB = Spice e Adhesive #312.					
--XG or --TG = Dark Green e Adhesive #312.					
--RX = Radiant Red e Adhesive #312.					
--TB = Spice e Adhesive #312.					

MODEL CODES:

72=2 DR Wagon	77=Open Body 93" Whlbase	T=2WD	U=4WD (RHD)
74=4 DR Wagon	78=Open Body 103" Whlbase - Export	J,N=4WD	

BODY STYLES:

YJ=Wrangler (4X4) "S"	XJ=Cherokee SE	ZJ=Grand Cherokee SE	Y1=Wrangler
Weangler (4X4) SE	Cherokee Sport	Grand Cherokee Laredo	X1=Cherokee
Wrangler (4X4) Sahara	Cherokee Country	Grand Cherolee Limited	Z1=Grand Cherokee
Wrangler (4X4) Renegade		ZG=Grand Cherokee European	KDX=Vehicles

AR = Use as Required - = Non Illustrated Part P.A.R. = Paint as Required

SUNVISORS WRANGLER - YJ
Figure IYJ-105

IYJ-105

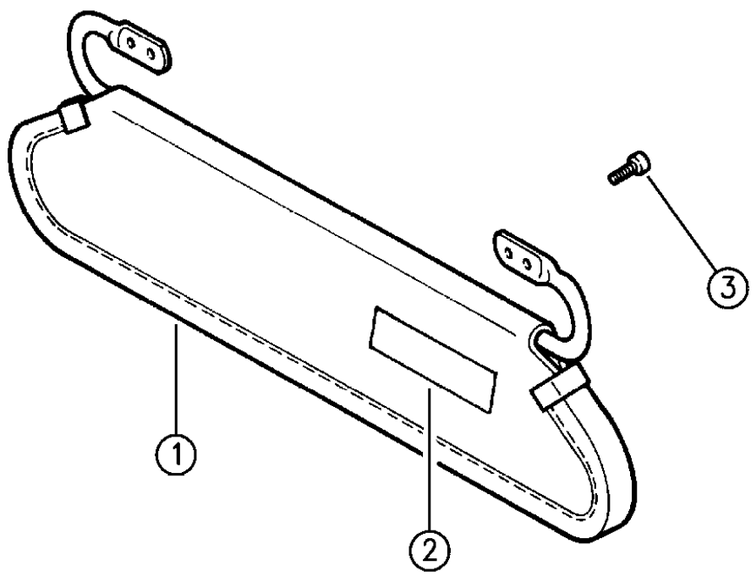

94J27 105

ITEM	PART NUMBER	QTY	BODY	MODEL	DESCRIPTION
1					SUNVISOR ***
	5CS34-5 LXA	1			Cinder (Use This Visor With A Green Interior XG Trim)
	5CS34-5 LTB	1			Spice
2					LABEL, Sunvisor
	5500 9555	1			English, Safety Warning
	5500 9556	1			French, Safety Warning
	5501 9388	1			Command Track, (English), USA, CANADA
	5501 9389	1			Command Track (French), CANADA, EUROPE
3	J400 4554	8			SCREW

MODEL CODES:

72=2 DR Wagon
74=4 DR Wagon
77=Open Body 93" Whlbase
78=Open Body 103" Whlbase - Export
T=2WD
J,N=4WD
U=4WD (RHD)

BODY STYLES:

YJ=Wrangler (4X4) "S"
Weangler (4X4) SE
Wrangler (4X4) Sahara
Wrangler (4X4) Renegade

XJ=Cherokee SE
Cherokee Sport
Cherokee Country

ZJ=Grand Cherokee SE
Grand Cherokee Laredo
Grand Cherolee Limited
ZG=Grand Cherokee European

Y1=Wrangler
X1=Cherokee
Z1=Grand Cherokee
KDX=Vehicles

AR = Use as Required - = Non Illustrated Part P.A.R. = Paint as Required

CARPETS AND INTERIOR TRIM PANELS WRANGLER - YJ
Figure IYJ-305

IYJ-305

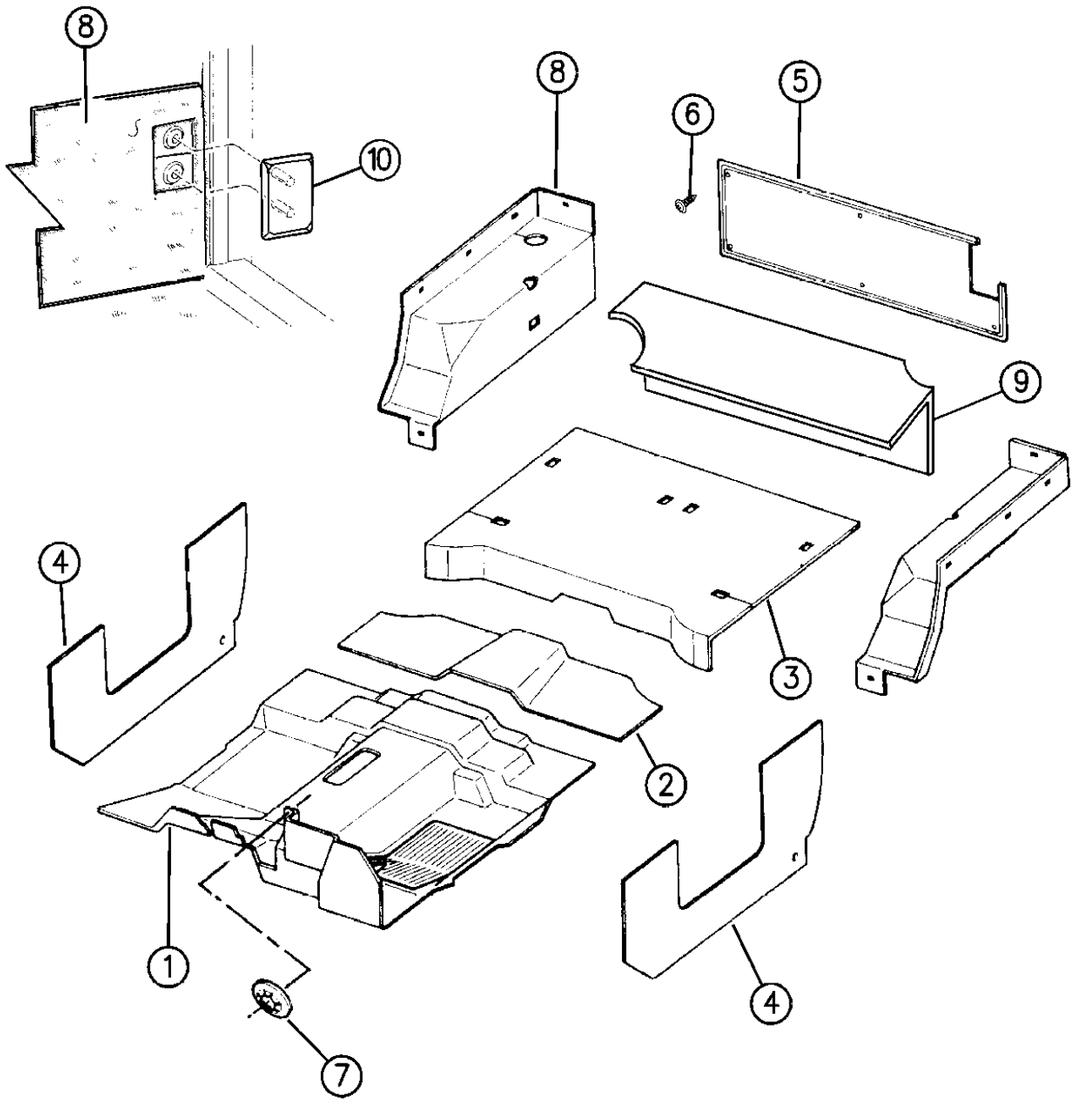

94J27 305

ITEM	PART NUMBER	QTY	BODY	MODEL	DESCRIPTION
1					CARPET, Floor, Front
					w/ Extra Quiet Insulation, 12 ounce short pile
	5EF0 2PRC	1			Radiant Red
	5EF0 2PXA	1			Cinder
	5EF0 2PTB	1			Spice
					w/o Extra Quiet Insulation, 20 ounce
					1994, w/Auto Trans.
	5DT0 6MXA	1			Cinder
	5DT0 6MTB	1			Spice
	5DT0 6MG8	1			Dark Green
					1994, w/Manual Trans.
	5EE0 6PA8	1			Dark Charcoal
	5EE0 6PG8	1			Dark Green
	5EE0 6PJ5	1			Khaki
	5EE0 6PRC	1			Radiant Red
	5EE0 6PTB	1			Spice
	5EE0 6PXA	1			Cinder or Black/Silver
	5EE0 6PY6	1			Dark Sand
					1995
	5EE0 6PXA	1			Cinder
	5EE0 6PTB	1			Spice
	5EE0 6PG8	1			Dark Green
	5EE0 6PTB	1			Spice
	5EE0 6PG8	1			Dark Green
-	5AY9 1KXA	1			CARPET, Front Floor Mini, Cinder (Modification Required When Used w/Manual Trans.)
					CARPET, RHD
	5EH8 1PXA	1			Cinder
	5EH8 1PTB	1			Spice
2					CARPET, Floor, Rear
					w/Extra Quiet Insulation, 12 ounce, short pile
	JX66 MRC	1			Radiant Red
	JX66 MTB	1			Spice
	JX66 MXA	1			Cinder
					w/o Extra Quiet Insulation, 20 ounce
	JX70 MTB	1			Spice
	JX70 MG8	1			Dark Green
	JX70 MXA	1			Cinder
3					CARPET, Cargo
					w/Extra Quiet Insulation, 12 ounce
	5DB1 2LRC	1	77		Radiant Red
	5DB1 2LXA	1	77		Cinder
	5DB1 2LTB	1	77		Spice
					w/o Extra Quiet Insulation, 20 ounce

MODEL CODES:

72=2 DR Wagon
74=4 DR Wagon
77=Open Body 93" Whlbase
78=Open Body 103" Whlbase - Export
T=2WD
J,N=4WD
U=4WD (RHD)

BODY STYLES:

YJ=Wrangler (4X4) "S"
Weangler (4X4) SE
Wrangler (4X4) Sahara
Wrangler (4X4) Renegade
XJ=Cherokee SE
Cherokee Sport
Cherokee Country
ZJ=Grand Cherokee SE
Grand Cherokee Laredo
Grand Cherolee Limited
ZG=Grand Cherokee European
Y1=Wrangler
X1=Cherokee
Z1=Grand Cherokee
KDX=Vehicles

AR = Use as Required - = Non Illustrated Part P.A.R. = Paint as Required

CARPETS AND INTERIOR TRIM PANELS WRANGLER - YJ
Figure IYJ-305

IYJ-305

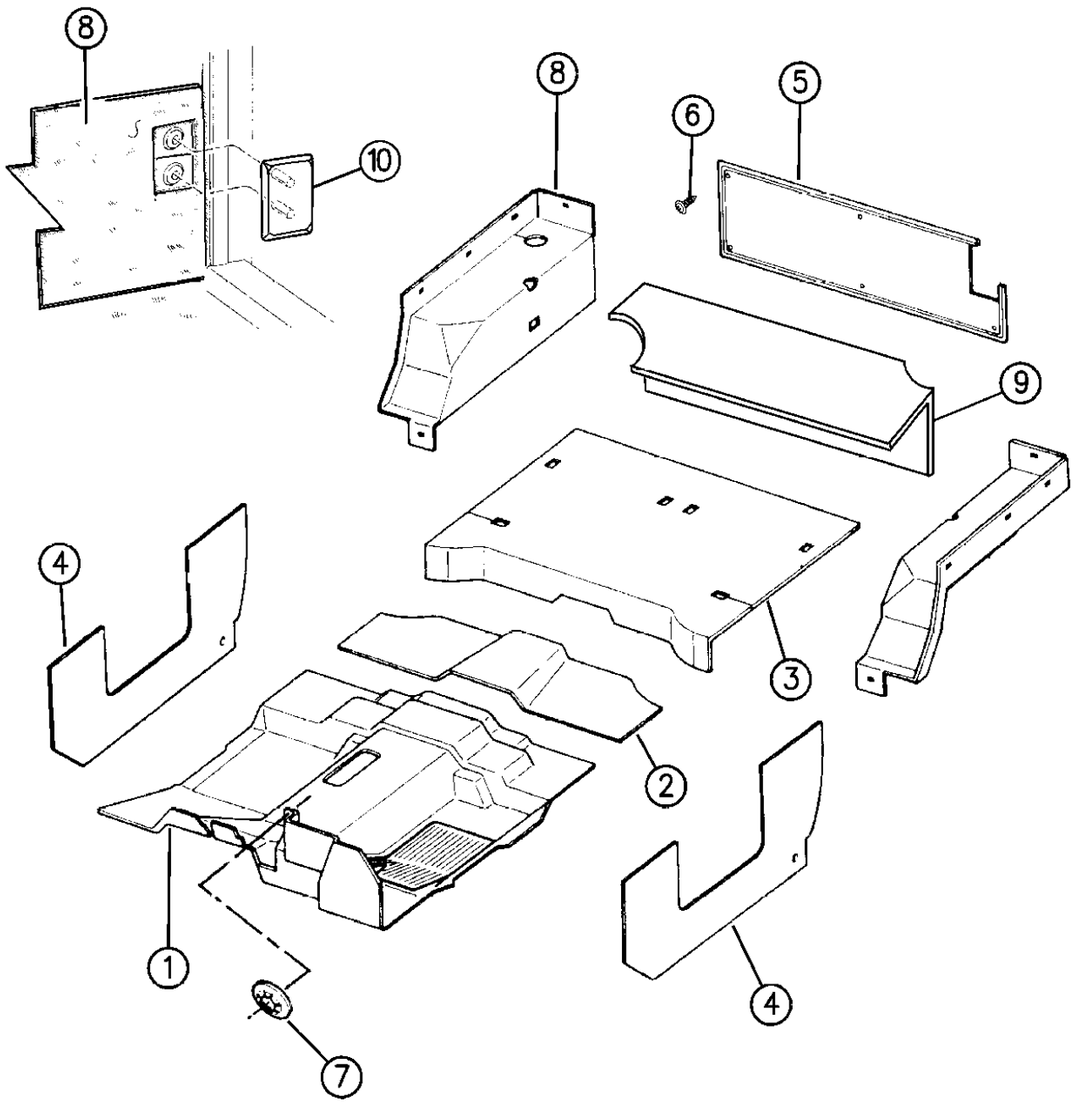

94J27 305

ITEM	PART NUMBER	QTY	BODY	MODEL	DESCRIPTION
	5DB1 4LXA	1		77	Cinder
	5DB1 4LTB	1		77	Spice
	5DB1 4LG8	1		77	Dark Green
	5EU2 7PTB	1		77	Spice, RHD
	5EU2 7PXA	1		77	Cinder, RHD
The following cargo carpets are for KDX - vehicles w/long wheel base. e Adhesive #312.					
	5CL3 8KXA	1		78	Cinder, KDX - Egypt
	5CL3 8LTB	1		78	Spice, KDX - Egypt
-	5521 4801	1		78	MAT, Rear Cargo Floor, Rubber, KDX - EGYPT
4					CARPET, Side Trim
	5DE58-9 MRC	1			Radiant Red
	5DE58-9 MXA	1			Cinder
	5DE58-9 MTB	1			Spice
	5DE58-9 MG8	1			Dark Green
5					CARPET, Tailgate
	5AU4 9KXA	1			Cinder
	5AU4 9LTB	1			Spice
6	J400 1776	12			SCREW, EUROPE
7	6035 249	2			NUT, Push On (Carpet to Steering Column Plate
8					CARPET, Wheelhouse
					w/ Extra Quiet Insulation
	JV78-9 PRC	1		77	Radiant Red
	JV78-9 PXA	1		77	Cinder
	JV78-9 PTB	1		77	Spice
	JV78-9 PA8	1		77	Charcoal
	JV78-9 PY6	1		77	Dark Sand
					w/o Extra Quiet Insulation
	JV82-3 PXA	1		77	Cinder
	JV82-3 PTB	1		77	Spice
	JV82-3 PG8	1		77	Dark Green
	JV82-3 PA8	1		77	Charcoal
	JV82-3 PJ5	1		77	Khaki
	JV82-3 PY6	1			Dark Sand
The following wheelhouse carpets are for KDX - vehicles w/long wheel base. e Adhesive #312.					
	5CL3 4KXA	1		78	Cinder, KDX - Egypt
	5CL3 4LTB	1		78	Spice, KDX - Egypt
9					CARPET, Used for Add-A-Trunk
	5DM3 8MG8	1			Green
	5DM3 8MXA	1			Cinder
	5DM3 8MTB	1			Spice
	5DM3 8MRC	1			Radiant Red
10					COVER, Wheel/House

MODEL CODES:

72=2 DR Wagon
74=4 DR Wagon
77=Open Body 93" Whlbase
78=Open Body 103" Whlbase - Export
T=2WD
J,N=4WD
U=4WD (RHD)

BODY STYLES:

YJ=Wrangler (4X4) "S"
Weangler (4X4) SE
Wrangler (4X4) Sahara
Wrangler (4X4) Renegade
XJ=Cherokee SE
Cherokee Sport
Cherokee Country
ZJ=Grand Cherokee SE
Grand Cherokee Laredo
Grand Cherolee Limited
ZG=Grand Cherokee European
Y1=Wrangler
X1=Cherokee
Z1=Grand Cherokee
KDX=Vehicles

AR = Use as Required - = Non Illustrated Part P.A.R. = Paint as Required

IYJ–305

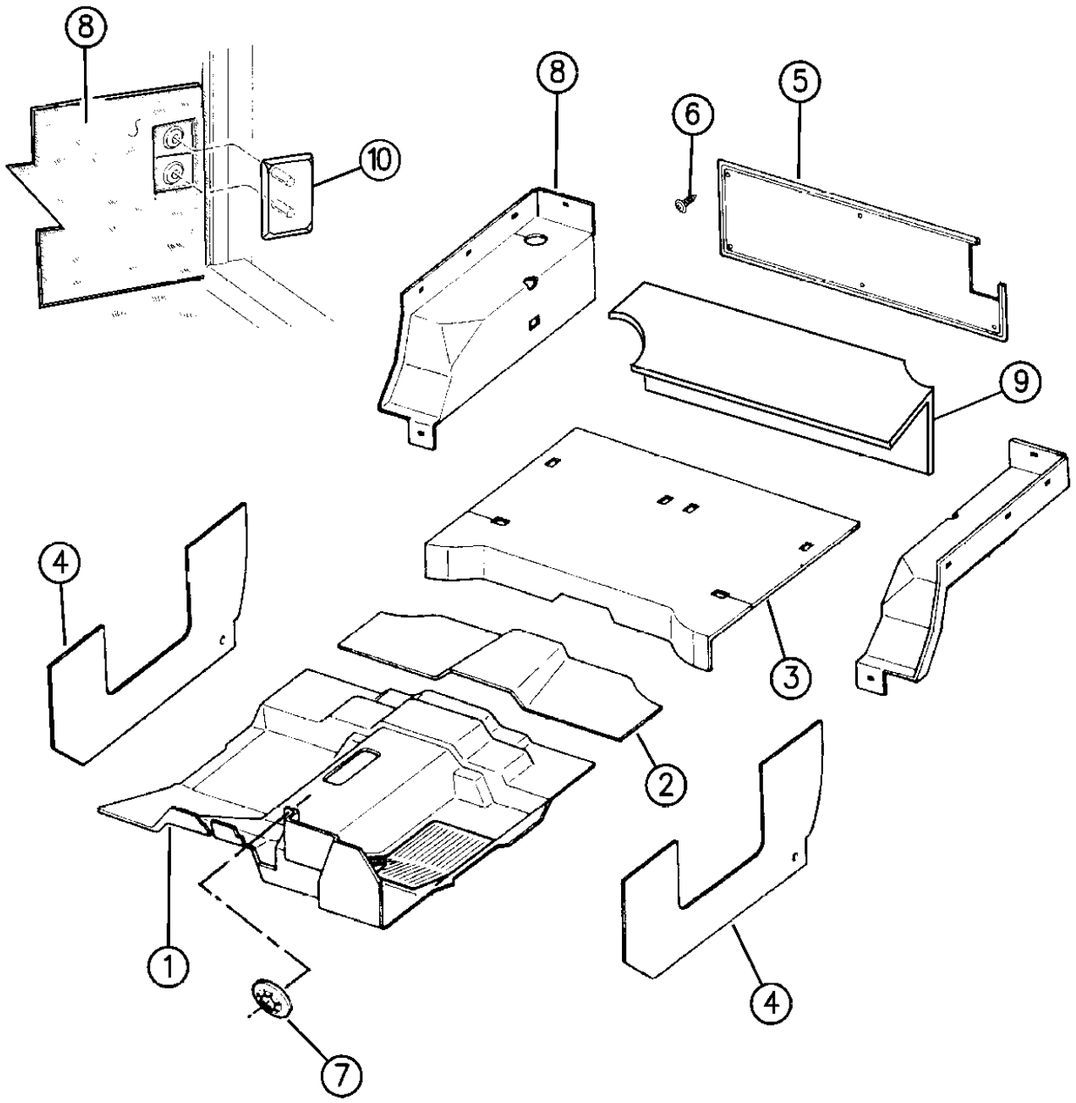

94J27 305

ITEM	PART NUMBER	QTY	BODY	MODEL	DESCRIPTION
	5DM8 9PTB	1			Spice
	5DM8 9PXA	1			Cinder

MODEL CODES:

72=2 DR Wagon
74=4 DR Wagon
77=Open Body 93" Whlbase
78=Open Body 103" Whlbase - Export
T=2WD
J,N=4WD
U=4WD (RHD)

BODY STYLES:

YJ=Wrangler (4X4) "S"
Weangler (4X4) SE
Wrangler (4X4) Sahara
Wrangler (4X4) Renegade

XJ=Cherokee SE
Cherokee Sport
Cherokee Country

ZJ=Grand Cherokee SE
Grand Cherokee Laredo
Grand Cherolee Limited
ZG=Grand Cherokee European

Y1=Wrangler
X1=Cherokee
Z1=Grand Cherokee
KDX=Vehicles

AR = Use as Required - = Non Illustrated Part P.A.R. = Paint as Required

INSULATION COWL AND HOOD WRANGLER - YJ
Figure IYJ-310

IYJ-310

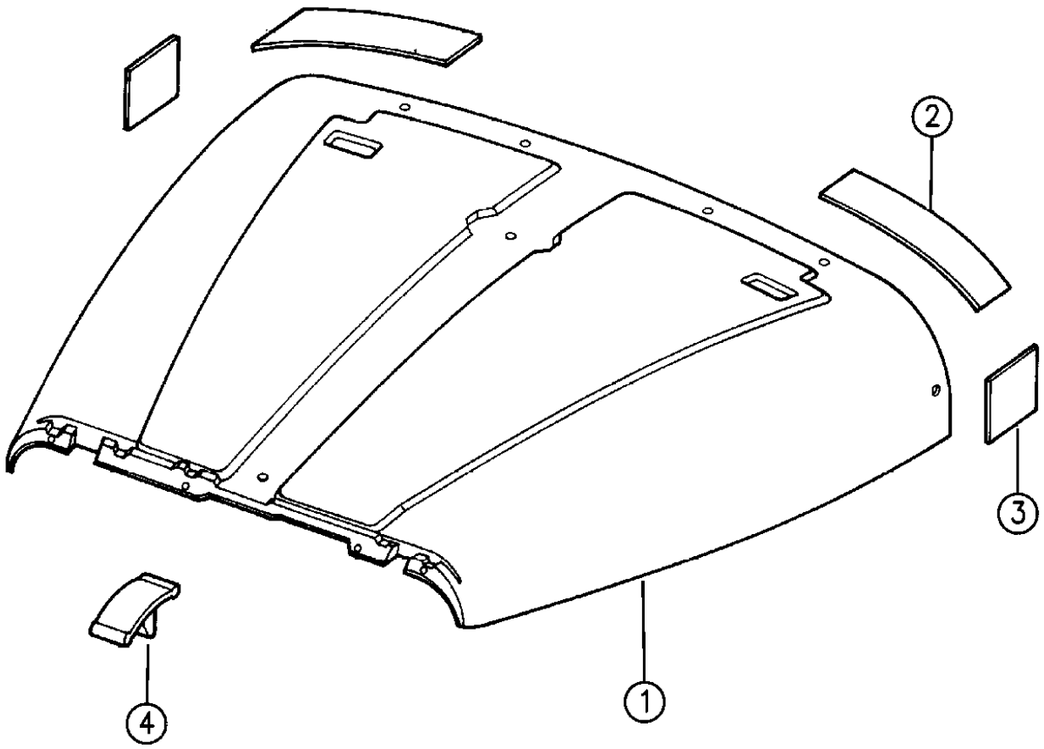

94J27 310

ITEM	PART NUMBER	QTY	BODY	MODEL	DESCRIPTION
1	5507 4734				INSULATION, Hood
2	5500 7804	2			INSULATION, Cowl Top
3	5500 7805	2			INSULATION, Cowl Side
4	6003 351	12			FASTENER, Hood Insulation

MODEL CODES:

72=2 DR Wagon
74=4 DR Wagon
77=Open Body 93" Whlbase
78=Open Body 103" Whlbase - Export
T=2WD
J,N=4WD
U=4WD (RHD)

BODY STYLES:

YJ=Wrangler (4X4) "S"
Weangler (4X4) SE
Wrangler (4X4) Sahara
Wrangler (4X4) Renegade
XJ=Cherokee SE
Cherokee Sport
Cherokee Country
ZJ=Grand Cherokee SE
Grand Cherokee Laredo
Grand Cherolee Limited
ZG=Grand Cherokee European
Y1=Wrangler
X1=Cherokee
Z1=Grand Cherokee
KDX=Vehicles

AR = Use as Required - = Non Illustrated Part P.A.R. = Paint as Required

« RETURN TO GROUP INDEX

DOOR TRIM PANELS HALF HARD DOORS WRANGLER - YJ
Figure IYJ-405

IYJ-405

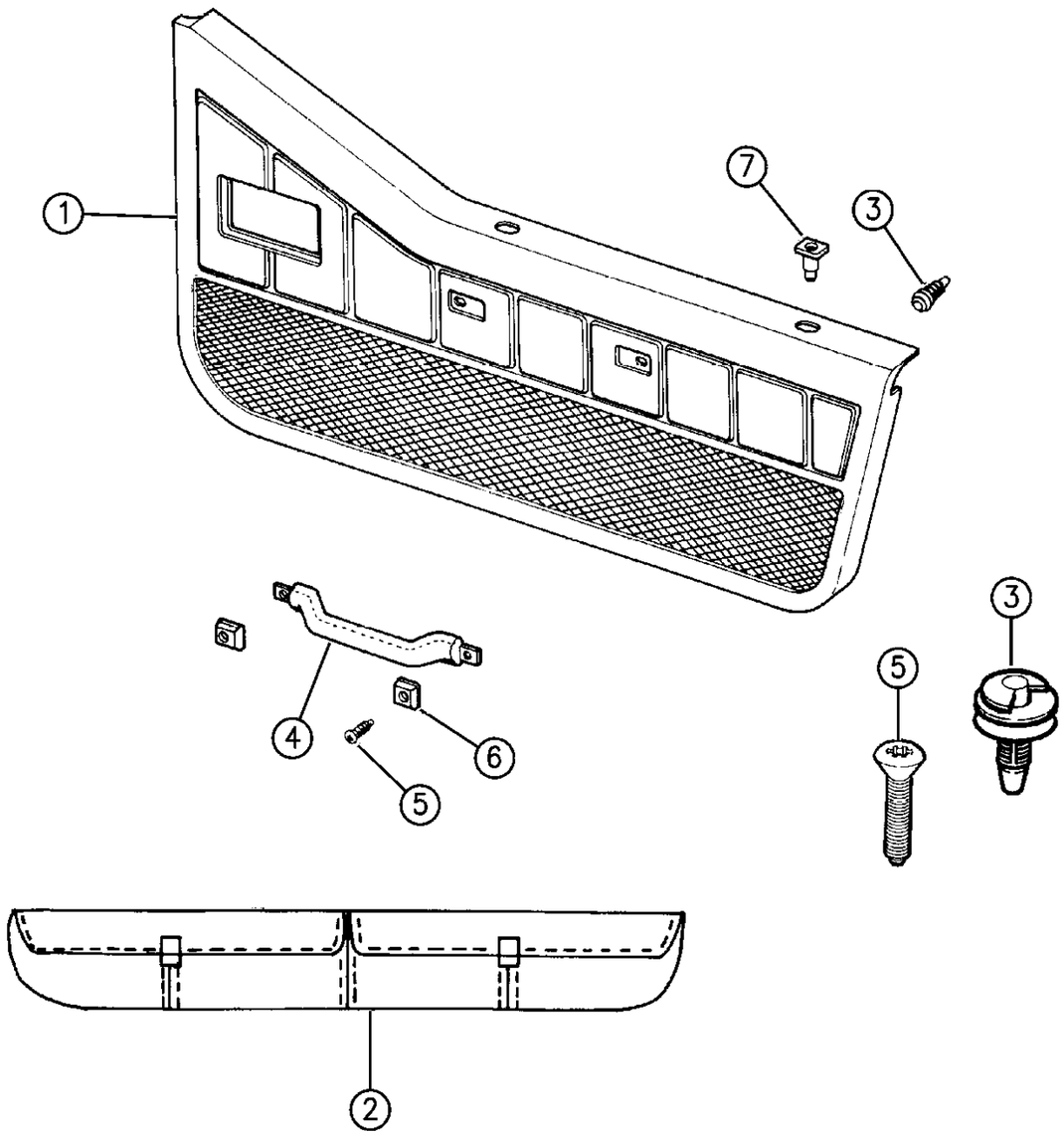

94J27 405

ITEM	PART NUMBER	QTY	BODY	MODEL	DESCRIPTION
1					PANEL, Door Trim
					Base Vehicle , "S" Package, Limited and "Renegade"
	5AY24-5 LTB	1			P.A.R.
	5AY28-9 LG8	1			1994, Dark Green, w/Brown Pocket
	5AY28-9 RTB	1			1995, Spice, w/pocket
2					POCKET, Door Trim
	5AX62-3 LG8	1			Dark Green, 1994
	5AX62-3 RTB	1			Spice, 1995
3	6033 862	18			FASTENER
4					HANDLE, Assist
	5AE5 0KRC	2			Radiant Red
	5AE5 0KXA	2			Cinder
	5AE5 0LG8	2			Dark Green
	5AE5 0LTB	2			Spice
5	J400 7397	4			SCREW
6	5500 9804	4			CAP, End
7					GROMMET
					1994
	5AG2 2KRC	6			Radiant Red
	5AG2 2KXA	6			Cinder
	5AG2 2LG8	6			Dark Green
	5AG2 2LTB	6			Spice
					1995, Up to 5-23-95
	5AG2 2JY1	6			Sand
	5AG2 2KXA	6			Spice
					1995, After 5-23-95
	5FB6 3RXA	6			Cinder
	5FB6 3RTB	6			Spice

MODEL CODES:

72=2 DR Wagon
74=4 DR Wagon
77=Open Body 93" Whlbase
78=Open Body 103" Whlbase - Export
T=2WD
J,N=4WD
U=4WD (RHD)

BODY STYLES:

YJ=Wrangler (4X4) "S"
Weangler (4X4) SE
Wrangler (4X4) Sahara
Wrangler (4X4) Renegade
XJ=Cherokee SE
Cherokee Sport
Cherokee Country
ZJ=Grand Cherokee SE
Grand Cherokee Laredo
Grand Cherolee Limited
ZG=Grand Cherokee European
Y1=Wrangler
X1=Cherokee
Z1=Grand Cherokee
KDX=Vehicles

AR = Use as Required - = Non Illustrated Part P.A.R. = Paint as Required

« RETURN TO GROUP INDEX

DOOR TRIM PANELS FULL HARD DOORS WRANGLER - YJ
Figure IYJ-410

IYJ-410

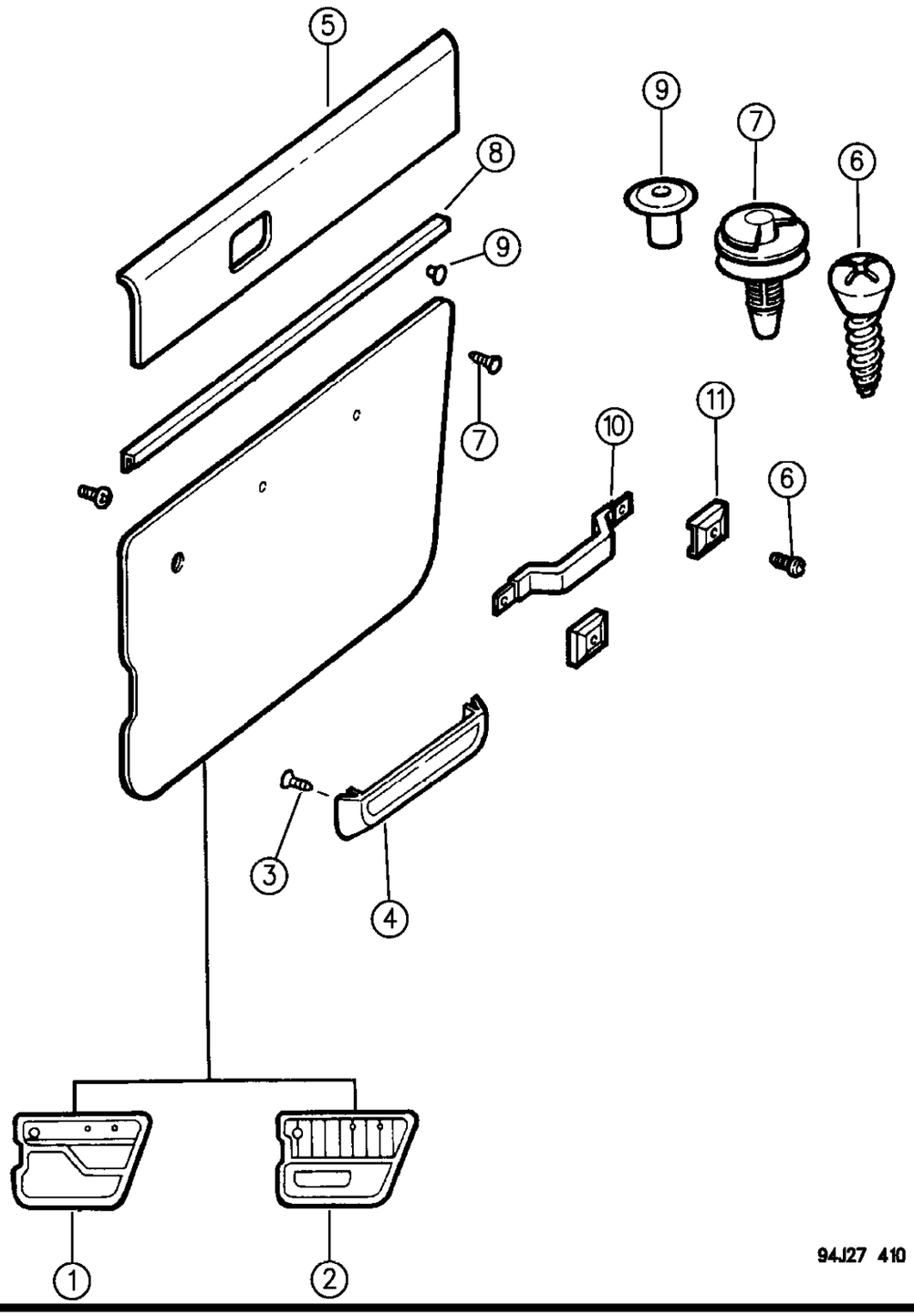

ITEM	PART NUMBER	QTY	BODY	MODEL	DESCRIPTION
1					PANEL, Door Trim
					"S", "Base"
	5AE12-3 KXA	1			Cinder
	5AE12-3 LTB	1			Spice
2					PANEL, Door Trim
					"Sahara", " Renegade", and "Limited"
	5AE14-5 KRC	1			Radiant Red
	5AE14-5 KXA	1			Cinder
	5AE14-5 LTB	1			Spice
	5AE14-5 LG8	1			Dark Green
3	3420 2074	10			SCREW, Stowage Bin
4	5AB8 9JY6	2			PANEL, Stowage Bin, P.A.R.
5					PANEL Door Trim Upper (used w/item 2) ***
	5BF74-5 KRC	1			Radiant Red
	5BF74-5 KXA	1			Cinder
	5BF74-5 LTB	1			Spice
	5BF74-5 LG8	1			Dark Green
6	J400 6901	4			SCREW, Assist Handle Mounting
7	6033 862	18			FASTENER, Door Trim Panel Mounting
8	5502 9868	2			RETAINER ASSEMBLY, Front Door Trim ***
9					RIVET, Door Trim Panel Mounting
	J400 2457	6			Except KDX - Venezuela
	3420 1197	6			KDX _ Venezuela
10					HANDLE, Assist
	5AE5 0KRC	2			Radiant Red
	5AE5 0KXA	2			Cinder
	5AE5 0LG8	2			Dark Green
	5AE5 0LTB	2			Spice
11	5500 9804	4			CAP, End

MODEL CODES:

72=2 DR Wagon
74=4 DR Wagon
77=Open Body 93" Whlbase
78=Open Body 103" Whlbase - Export
T=2WD
J,N=4WD
U=4WD (RHD)

BODY STYLES:

YJ=Wrangler (4X4) "S"
Weangler (4X4) SE
Wrangler (4X4) Sahara
Wrangler (4X4) Renegade
XJ=Cherokee SE
Cherokee Sport
Cherokee Country
ZJ=Grand Cherokee SE
Grand Cherokee Laredo
Grand Cherolee Limited
ZG=Grand Cherokee European
Y1=Wrangler
X1=Cherokee
Z1=Grand Cherokee
KDX=Vehicles

AR = Use as Required - = Non Illustrated Part P.A.R. = Paint as Required

« RETURN TO GROUP INDEX

SEAT ASSEMBLIES, SEAT COVERS AND SEAT TRACKS FRONT SEAT WRANGLER - YJ, 1994
Figure IYJ-505

IYJ-505A

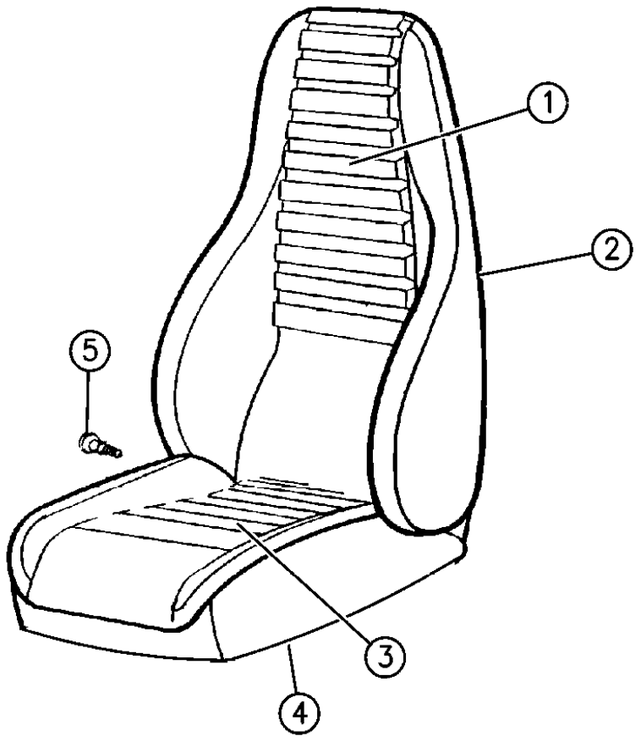

94J27 505

ITEM	PART NUMBER	QTY	BODY	MODEL	DESCRIPTION
1					COVER, Seat Back
	5CK30-1 KRC	1			Radiant Red, (T5RX)
	5CK30-1 KS1	1			Charcoal, (T5XS)
	5CK30-1 LTB	1			Spice, (T5TB)
	5DD44-5 LS1	1			Charcoal, (L6XS)
	5DD44-5 LTB	1			Spice, (L6TB)
	5CR58-9 LTB	1			Spice, (P6TB)
	5CR58-9 LS1	1			Charcoal, (P6XS)
	5DA66-7 LTB	1			Spice, (LJTB)
	5BB98-9 LG8	1			Dark Green, (C5XG)
2					BACK ASSEMBLY COMPLETE, Includes Cover ***
	5CK28-9 KRC	1			Radiant Red, (T5RX)
	5CK28-9 LTB	1			Spice, (T5TB)
	5CK28-9 KS1	1			Charcoal, (T5XS)
	5DD46-7 LTB	1			Spice, (L6TB)
	5DD46-7 LS1	1			Charcoal, (L6XS)
	5CR56-7 LS1	1			Charcoal, (P6XS)
	5CR56-7 LTB	1			Spice, (P6TB)
	5DA64-5 LTB	1			Spice, (LJTB)
	5BB94-5 LG8	1			Dark Green, (C5XG)
	5BB94-5 RJ4	1			Gold, (C5TJ), 1995
3					COVER, Cushion
	5AX70-1 KRC	1			Radiant Red, (T5RX)
	5AX70-1 LTB	1			Spice, (T5TB)
	5AX70-1 KS1	1			Charcoal, (T5XS)
	5CR66-7 LS1	1			Charcoal, (L6XS)
	5CR66-7 LTB	1			Spice, (L6TB)
	5CR54-5 LTB	1			Spice, (P6TB)
	5CR54-5 LS1	1			Charcoal, (P6XS)
	5DA62-3 LTB	1			Spice, (LJTB)
	5BB96-7 LG8	1			Dark Green, (C5XG)
4					CUSHION ASSEMBLY COMPLETE, Includes Cover ***
	5AX68-9 KRC	1			Radiant Red, (T5RX)
	5AX68-9 LTB	1			Spice, (T5TB)
	5AX68-9 KS1	1			Charcoal, (T5XS)
	5CR64-5 LTB	1			Spice, (L6TB)
	5CR64-5 LS1	1			Charcoal, (L6XS)
	5CR52-3 LTB	1			Spice, (P6TB)
	5CR52-3 LS1	1			Charcoal, (P6XS)
	5DA60-1 LTB	1			Spice, (LJTB)
	5BB92-3 LG8	1			Dark Green (C5XG)
5	4638 585	2			BOLT, Shoulder, Seat Back Frame to Seat Cushion Frame

MODEL CODES:

72=2 DR Wagon
74=4 DR Wagon
77=Open Body 93" Whlbase
78=Open Body 103" Whlbase - Export
T=2WD
J,N=4WD
U=4WD (RHD)

BODY STYLES:

YJ=Wrangler (4X4) "S"
Weangler (4X4) SE
Wrangler (4X4) Sahara
Wrangler (4X4) Renegade
XJ=Cherokee SE
Cherokee Sport
Cherokee Country
ZJ=Grand Cherokee SE
Grand Cherokee Laredo
Grand Cherolee Limited
ZG=Grand Cherokee European
Y1=Wrangler
X1=Cherokee
Z1=Grand Cherokee
KDX=Vehicles

AR = Use as Required - = Non Illustrated Part P.A.R. = Paint as Required

« RETURN TO GROUP INDEX

SEAT ASSEMBLIES, SEAT COVERS AND SEAT TRACKS FRONT SEAT WRANGLER, YJ, 1995
Figure IYJ-510

IYJ-510A

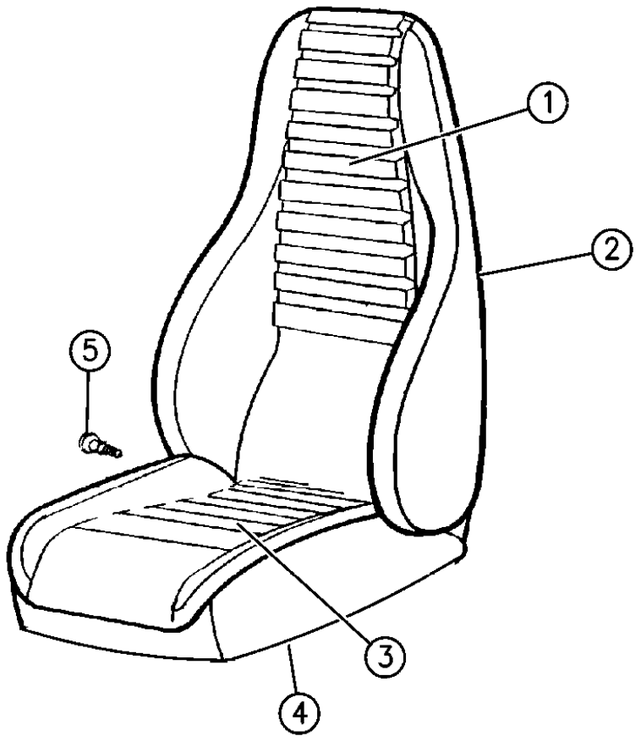

94J27 510

ITEM	PART NUMBER	QTY	BODY	MODEL	DESCRIPTION
1					COVER, Seat Back
					Domestic, 29.5" High
	MS70-1 RTB	1			Spice, (B5TB)
	5DD44-5 LS1	1			Charcoal, (L6XS)
	5DD44-5 LTB	1			Spice, (L6TB)
	5CR58-9 LS1	1			Charcoal, (P6XS)
	5CR58-9 LTB	1			Spice, (P6TB)
	MS90-1 RS1	1			Charcoal, (T5XS)
	MS90-1 RTB	1			Spice, (T5TB)
	5BB9 8RJ4	1			Moss Green, Right, (C5TJ)
	5BB9 9RJ4	1			Moss Green, Left, (C5TJ)
					EXPORT, 31" High
	MS86-7 RS1	1			Charcoal, (L6XS)
	MS86-7 RTB	1			Spice, (L6TB)
	MS88-9 RS1	1			Charcoal, (P6XS)
	MS88-9 RTB	1			Spice, (P6TB)
	MS92-3 RS1	1			Charcoal, (T5XS)
	MS92-3 RTB	1			Spice, (T5TB)
	MS84 RJ4	1			Moss Green, Right, (C5TJ)
	MS85 RJ4	1			Moss Green, (C5TJ)
2					BACK ASSEMBLY, Complete Includes Cover
					Domestic, 29.5" High
	MS56-7 RTB	1			Spice, (B5TB)
	5DD46-7 LS1	1			Charcoal, (L6XS)
	5DD46-7 LTB	1			Spice, (L6TB)
	5CR56-7 LS1	1			Charcoal, (P6XS)
	5CR56-7 LTB	1			Spice, (P6TB)
	MS66-7 RS1	1			Charcoal, (T5XS)
	MS66-7 RTB	1			Spice, (T5TB)
	5BB9 4RJ4	1			Moss Green, Right, (C5TJ)
	5BB9 5RJ4	1			Moss Green, Left, (C5TJ)
					EXPORT, 31" High
	MS62-3 RS1	1			Charcoal, (L6X6)
	MS62-3 RTB	1			Spice, (L6TB)
	MS64-5 RS1	1			Charcoal, (P6XS)
	MS64-5 RTB	1			Spice, (P6TB)
	MS68-9 RS1	1			Charcoal, (T5XS)
	MS68-9 RTB	1			Spice, (T5TB)
	MS58 RJ4	1			Moss Green, Right, (C5TJ)
	MS59 RJ4	1			Moss Green, Left, (C5TJ)
3					COVER, Cushion
	MU40-1 RTB	1			Spice, (B5TB)

MODEL CODES:

72=2 DR Wagon
74=4 DR Wagon
77=Open Body 93" Whlbase
78=Open Body 103" Whlbase - Export
T=2WD
J,N=4WD
U=4WD (RHD)

BODY STYLES:

YJ=Wrangler (4X4) "S"
Weangler (4X4) SE
Wrangler (4X4) Sahara
Wrangler (4X4) Renegade
XJ=Cherokee SE
Cherokee Sport
Cherokee Country
ZJ=Grand Cherokee SE
Grand Cherokee Laredo
Grand Cherolee Limited
ZG=Grand Cherokee European
Y1=Wrangler
X1=Cherokee
Z1=Grand Cherokee
KDX=Vehicles

AR = Use as Required - = Non Illustrated Part P.A.R. = Paint as Required

IYJ-510A

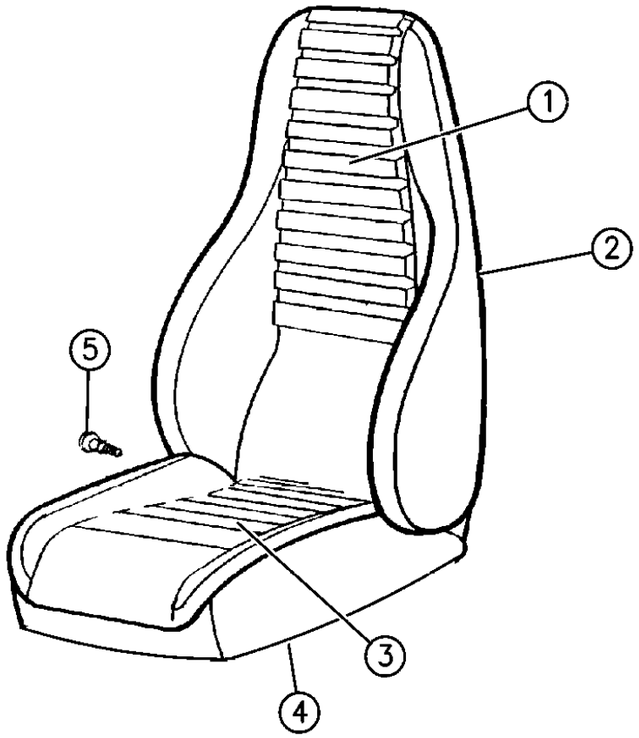

94J27 510

ITEM	PART NUMBER	QTY	BODY	MODEL	DESCRIPTION
	5CR66-7 LS1	1			Charcoal, (L6XS)
	5CR66-7 LTB	1			Spice, (L6TB)
	5CR54-5 LS1	1			Charcoal, (P6XS)
	5CR54-5 LTB	1			Spice, (P6TB)
	MU42-3 RS1	1			Charcoal, (T5XS)
	MU42-3 RTB	1			Spice, (T5TB)
	5BB9 6RJ4	1			Moss Green, Right, (C5TJ)
	5BB9 7RJ4	1			Moss Green, Left, (C5TJ)
4					CUSHION ASSEMBLY, Complete Includes Cover ***
	MS94-5 RTB	1			Spice, (B5TB)
	5CR64-5 LS1	1			Charcoal, (L6XS)
	5CR64-5 LTB	1			Spice, (L6TB)
	5CR52-3 LS1	1			Charcoal, (P6XS)
	5CR52-3 LTB	1			Spice, (P6TB)
	MS96-7 RS1	1			Charcoal, (T5XS)
	MS96-7 RTB	1			Spice, (T5TB)
	5BB9 2RJ4	1			Moss Green, Right, (C5TJ)
	5BB9 3RJ4	1			Moss Green, Left, (C5TJ)
5	4638 585	2			BOLT, Shoulder, Seat Back Frame to Seat Cushion Frame

MODEL CODES:

72=2 DR Wagon
74=4 DR Wagon
77=Open Body 93" Whlbase
78=Open Body 103" Whlbase - Export
T=2WD
J,N=4WD
U=4WD (RHD)

BODY STYLES:

YJ=Wrangler (4X4) "S"
Weangler (4X4) SE
Wrangler (4X4) Sahara
Wrangler (4X4) Renegade
XJ=Cherokee SE
Cherokee Sport
Cherokee Country
ZJ=Grand Cherokee SE
Grand Cherokee Laredo
Grand Cherolee Limited
ZG=Grand Cherokee European
Y1=Wrangler
X1=Cherokee
Z1=Grand Cherokee
KDX=Vehicles

AR = Use as Required - = Non Illustrated Part P.A.R. = Paint as Required

SEAT ASSEMBLIES AND SEAT COVERS REAR SEAT WRANGLER - YJ, 1994
Figure IYJ-605

IYJ-605B

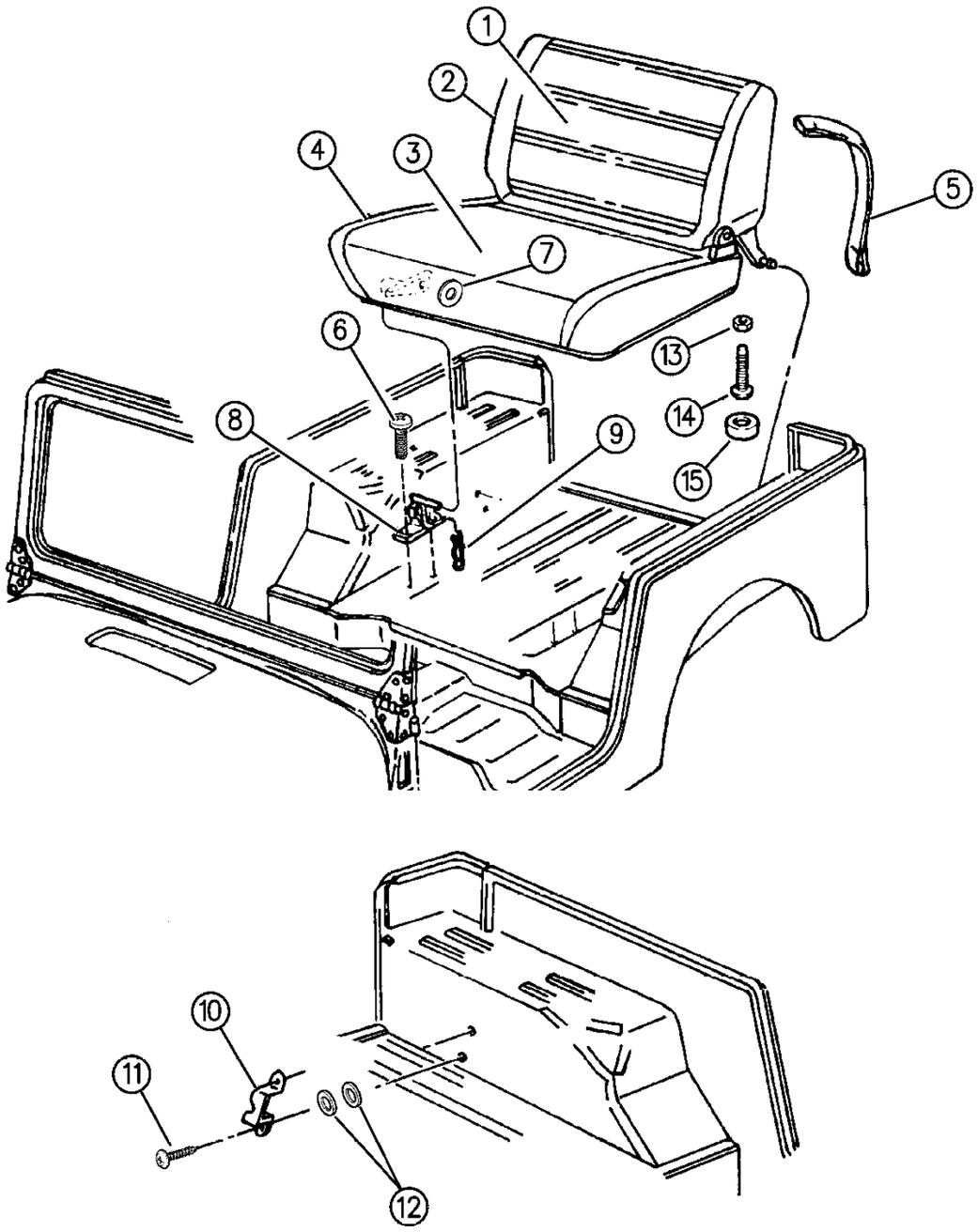

ITEM	PART NUMBER	QTY	BODY	MODEL	DESCRIPTION
1					COVER, Seat Back
	5CH5 2LRC	1			Radiant Red, (T5RX)
	5CH5 2LTB	1			Spice, (T5TB)
	5CH5 2LS1	1			Charcoal, (T5XS)
	5CH2 8LTB	1			Spice, (P6TB)
	5CH2 8LS1	1			Charcoal, (P6XS)
	5DA7 6LTB	1			Spice, (LJTB)
	5CH4 0LG8	1			Dark Green, (C5XG)
2					BACK ASSEMBLY COMPLETE, Includes Cover ***
	5CH5 0LRC	1			Radiant Red, (T5RX)
	5CH5 0LTB	1			Spice, (T5TB)
	5CH5 0LS1	1			Charcoal, (T5XS)
	5CH2 6LS1	1			Charcoal, (P6XS)
	5CH2 6LTB	1			Spice, (P6XT)
	5DA7 4LTB	1			Spice, (LJTB)
	5CH3 8LG8	1			Dark Green, (C5XG)
3					COVER, Cushion
	5CH4 8LRC	1			Radiant Red, (T5RX)
	5CH4 8LTB	1			Spice, (T5TB)
	5CH4 8LS1	1			Charcoal, (T5XS)
	5CH2 4LTB	1			Spice, (P6TB)
	5CH2 4LS1	1			Charcoal, (P6XS)
	5DA7 2LTB	1			Spice, (LJTB)
	5CH3 6LG8	1			Dark Green, (C5XG)
4					CUSHION ASSEMBLY COMPLETE, Includes Cover ***
	5CH4 6LRC	1			Radiant Red, (T5RX)
	5CH4 6LTB				Spice, (T5TB)
	5CH4 6LS1	1			Charcoal, (T5XS)
	5CH2 2LTB	1			Spice, (P6TB)
	5CH2 2LS1	1			Charcoal, (P6XS)
	5DA7 0LTB	1			Spice, (LJTB)
	5CH3 4LG8	1			Dark Green, (C5XG)
-	4713 794	1			LEVER ASSEMBLY, Rear Seat Release ***
-	4713 795	1			SPRING, Rear Seat Release Lever
-	4713 799	2			WASHER, Rear Seat Pivot, Black Nylon
-	4638 585	3			BOLT, Torx, Shoulder, (Seat Back Pivot and Release Lever)
5	5501 4330	1			STRAP, Rear Seat Retaining
6	J400 4626	4			SCREW
7	J400 7317	4			WASHER
8	J576 6317	2			BRACKET ASSEMBLY, Rear Seat Pivot ***
9	J400 6061	2			PIN, (Cushion Frame to Pivot Bracket)
10	5500 7759	2			BRACKET, Rear Seat Back Lock Striker

MODEL CODES:

72=2 DR Wagon
74=4 DR Wagon
77=Open Body 93" Whlbase
78=Open Body 103" Whlbase - Export
T=2WD
J,N=4WD
U=4WD (RHD)

BODY STYLES:

YJ=Wrangler (4X4) "S"
Weangler (4X4) SE
Wrangler (4X4) Sahara
Wrangler (4X4) Renegade
XJ=Cherokee SE
Cherokee Sport
Cherokee Country
ZJ=Grand Cherokee SE
Grand Cherokee Laredo
Grand Cherolee Limited
ZG=Grand Cherokee European
Y1=Wrangler
X1=Cherokee
Z1=Grand Cherokee
KDX=Vehicles

AR = Use as Required - = Non Illustrated Part P.A.R. = Paint as Required

SEAT ASSEMBLIES AND SEAT COVERS REAR SEAT WRANGLER - YJ, 1994
Figure IYJ-605

IYJ-605B

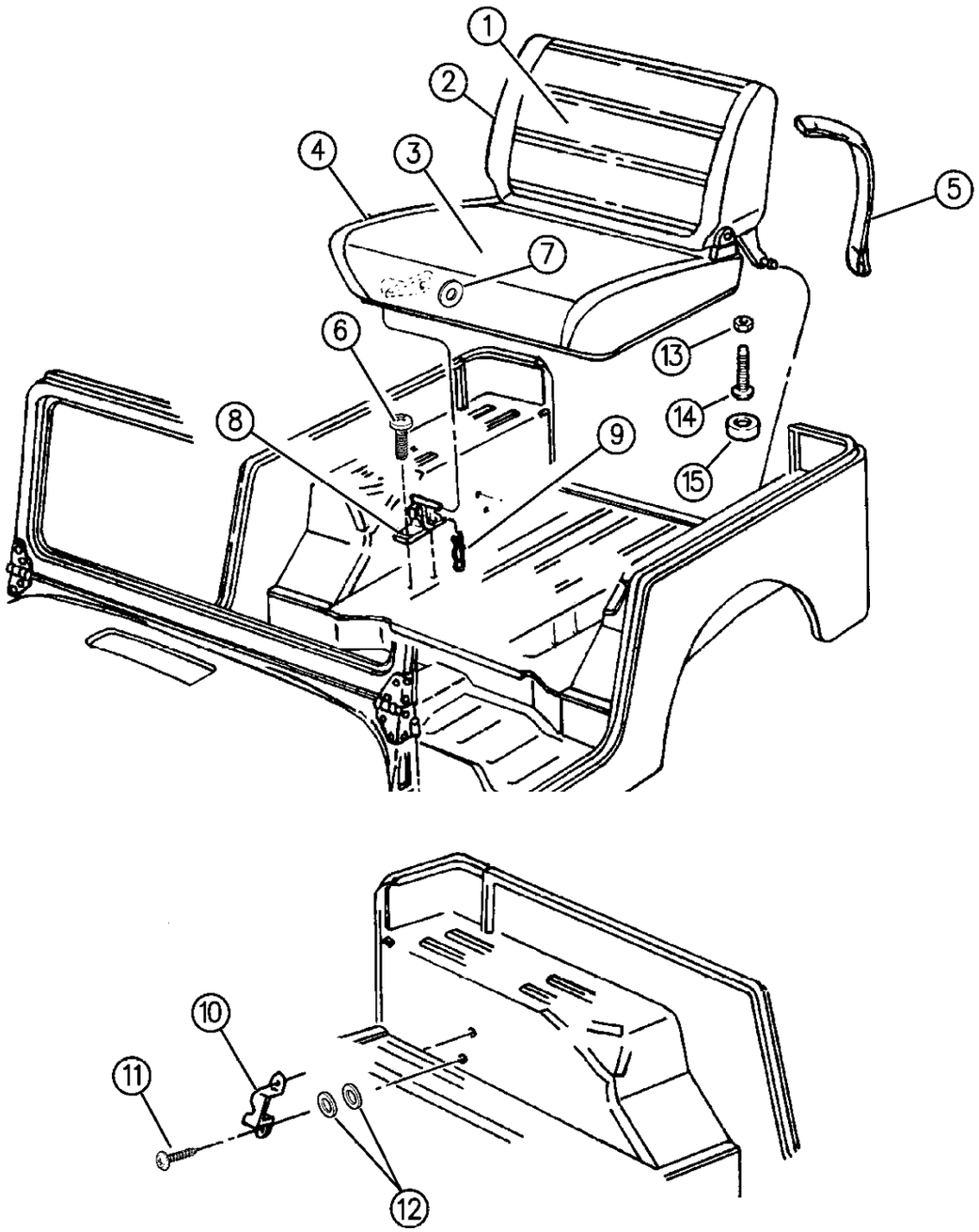

ITEM	PART NUMBER	QTY	BODY	MODEL	DESCRIPTION
11	6034 564	4			SCREW
12	J400 1104	4			WASHER
13	J012 0376	3			NUT
14	J096 8343	3			SCREW
15	J095 8556	3			BUMPER
-	4637 926-7	1			BRACKET ASSEMBLY, (Includes Bumper) EUROPE, KDX ***

MODEL CODES:

72=2 DR Wagon
74=4 DR Wagon
77=Open Body 93" Whlbase
78=Open Body 103" Whlbase - Export
T=2WD
J,N=4WD
U=4WD (RHD)

BODY STYLES:

YJ=Wrangler (4X4) "S"
Weangler (4X4) SE
Wrangler (4X4) Sahara
Wrangler (4X4) Renegade

XJ=Cherokee SE
Cherokee Sport
Cherokee Country

ZJ=Grand Cherokee SE
Grand Cherokee Laredo
Grand Cherolee Limited
ZG=Grand Cherokee European

Y1=Wrangler
X1=Cherokee
Z1=Grand Cherokee
KDX=Vehicles

AR = Use as Required - = Non Illustrated Part P.A.R. = Paint as Required

SEAT ASSEMBLIES, SEAT COVERS REAR SEAT WRANGLER, YJ, 1995
Figure IYJ-610

IYJ-610A

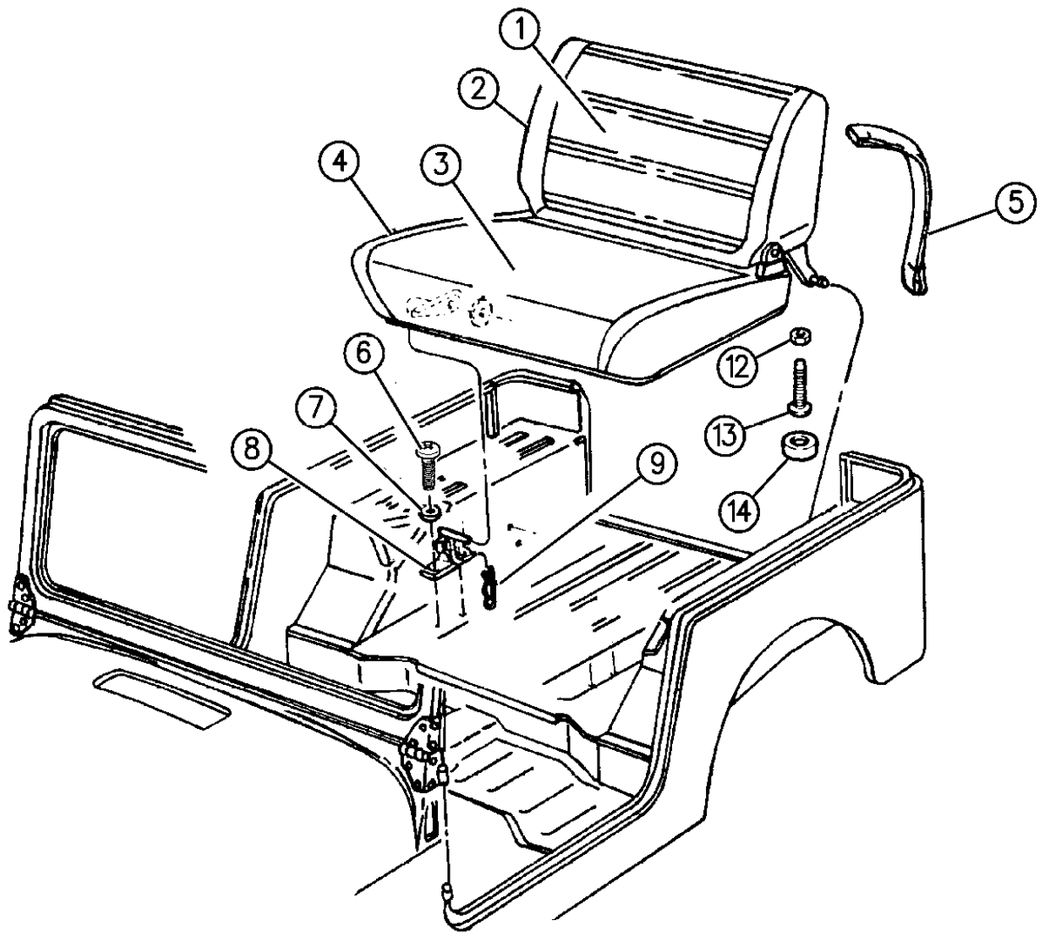

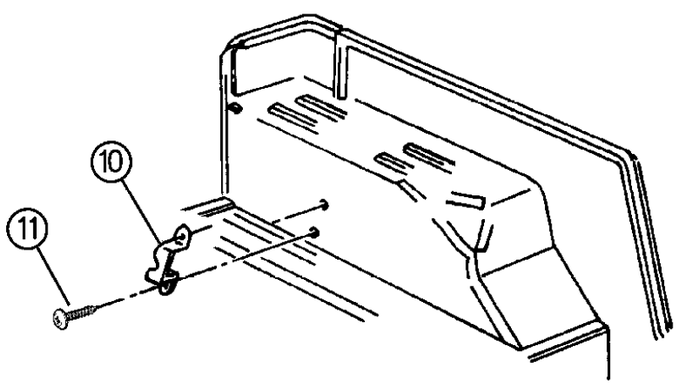

94J27 610

ITEM	PART NUMBER	QTY	BODY	MODEL	DESCRIPTION
1					COVER, Seat Back
	MU54 RTB	1			Spice, (B5TB)
	5CH4 0RJ4	1			Moss Green, (C5TJ)
	5CH2 8LS1	1			Charcoal, (P6XS)
	5CH2 8LTB	1			Spice, (P6TB)
	MU55 RS1	1			Charcoal, (T5XS)
	MU55 RTB	1			Spice, (T5TB)
2					BACK ASSEMBLY COMPLETE, Includes Cover ***
	MU51 RTB	1			Spice, (B5TB)
	5CH3 8RJ4	1			Moss Green, (C5TJ)
	5CH2 6LS1	1			Charcoal, (P6XS)
	5CH2 6LTB	1			Spice, (P6TB)
	MU52 RS1	1			Charcoal, (T5XS)
	MU52 RTB	1			Spice, (T5TB)
3					COVER, Cushion
	MU58 RTB	1			Spice, (B5TB)
	5CH3 6RJ4	1			Moss Green, (C5TJ)
	5CH2 4LS1	1			Charcoal, (P6XS)
	5CH2 4LTB	1			Spice, (P6TB)
	MU72 RS1	1			Charcoal, (T5XS)
	MU72 RTB	1			Spice, (T5TB)
4					CUSHION ASEMBLY COMPLETE, Includes Cover ***
	MU56 RTB	1			Spice, (B5TB)
	5CH3 4RJ4	1			Moss Green, (C5TJ)
	5CH2 2LS1	1			Charcoal, (P6XS)
	5CH2 2LTB	1			Spice, (P6TB)
	MU57 RS1	1			Charcoal, (T5XS)
	MU57 RTB	1			Spice, (T5TB)
-	4713 794	1			LEVER ASSEMBLY, Rear Seat Release ***
-	4713 795	1			SPRING, Rear Seat Release Lever
-	4713 799	2			WASHER, Rear Seat Pivot, Black Nylon
-	4638 585	3			BOLT, Torx, Shoulder, (See Back Pivot and Release)
5	5501 4330	1			STRAP, Rear Seat Retaining
6	J400 4626	4			SCREW
7	J400 7317	4			WASHER
8	J576 6317	2			BRACKET ASSEMBLY, Rear Seat Pivot ***
9	6035 196	2			PIN, (Cushion Frame to Pivot Bracket)
10	5500 7759	2			BRACKET, Rear Seat Back Lock Striker
11	6034 564	4			SCREW
12	J012 0376	3			NUT
13	J096 8343	3			SCREW
14	J095 8556	3			BUMPER

MODEL CODES:

72=2 DR Wagon
74=4 DR Wagon
77=Open Body 93" Whlbase
78=Open Body 103" Whlbase - Export
T=2WD
J,N=4WD
U=4WD (RHD)

BODY STYLES:

YJ=Wrangler (4X4) "S"
Weangler (4X4) SE
Wrangler (4X4) Sahara
Wrangler (4X4) Renegade
XJ=Cherokee SE
Cherokee Sport
Cherokee Country
ZJ=Grand Cherokee SE
Grand Cherokee Laredo
Grand Cherolee Limited
ZG=Grand Cherokee European
Y1=Wrangler
X1=Cherokee
Z1=Grand Cherokee
KDX=Vehicles

AR = Use as Required - = Non Illustrated Part P.A.R. = Paint as Required

SEAT ASSEMBLIES, SEAT COVERS REAR SEAT WRANGLER, YJ, 1995
Figure IYJ-610

IYJ-610A

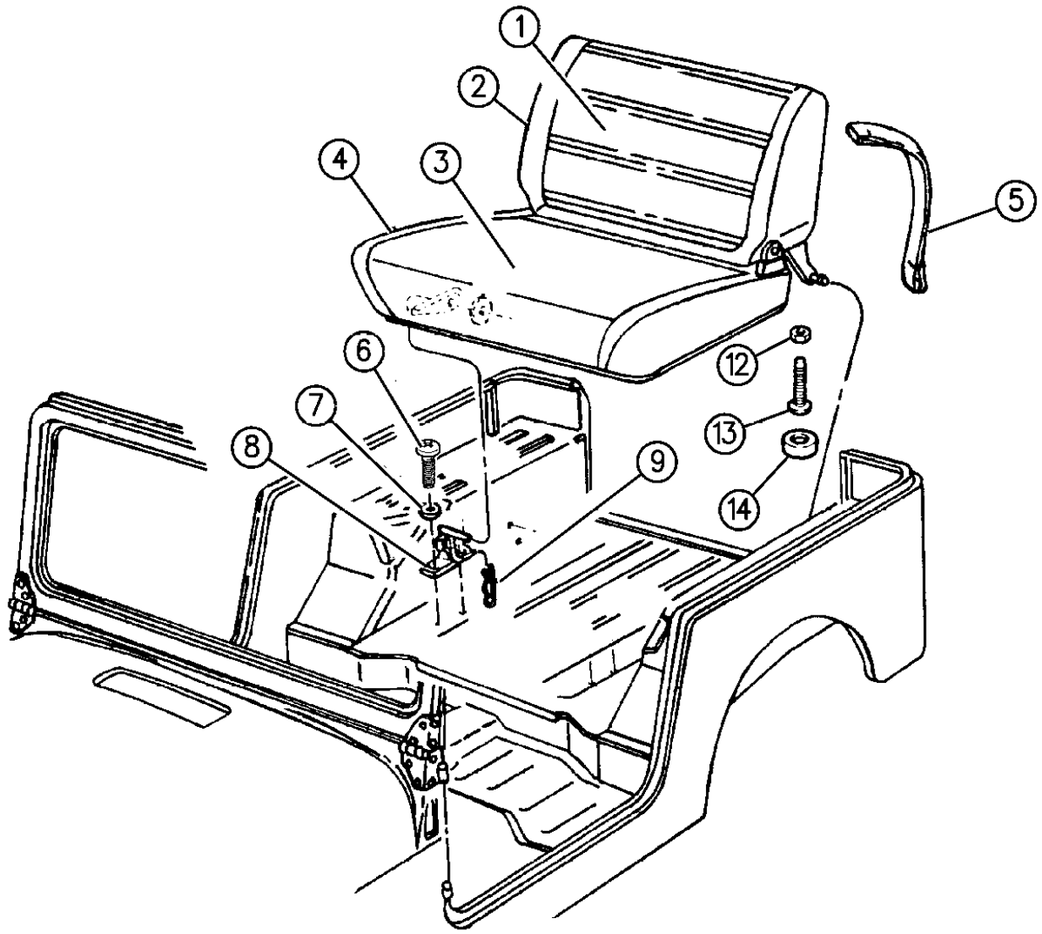

94J27 610

ITEM	PART NUMBER	QTY	BODY	MODEL	DESCRIPTION
-	4637 926-7	1			BRACKET ASSEMBLY, (Includes Bumper) EUROPE, KDX ***

MODEL CODES:

72=2 DR Wagon
74=4 DR Wagon
77=Open Body 93" Whlbase
78=Open Body 103" Whlbase - Export
T=2WD
J,N=4WD
U=4WD (RHD)

BODY STYLES:

YJ=Wrangler (4X4) "S"
Weangler (4X4) SE
Wrangler (4X4) Sahara
Wrangler (4X4) Renegade
XJ=Cherokee SE
Cherokee Sport
Cherokee Country
ZJ=Grand Cherokee SE
Grand Cherokee Laredo
Grand Cherolee Limited
ZG=Grand Cherokee European
Y1=Wrangler
X1=Cherokee
Z1=Grand Cherokee
KDX=Vehicles

AR = Use as Required - = Non Illustrated Part P.A.R. = Paint as Required

SEAT BELTS WRANGLER - YJ
Figure IYJ-710

IYJ-710A

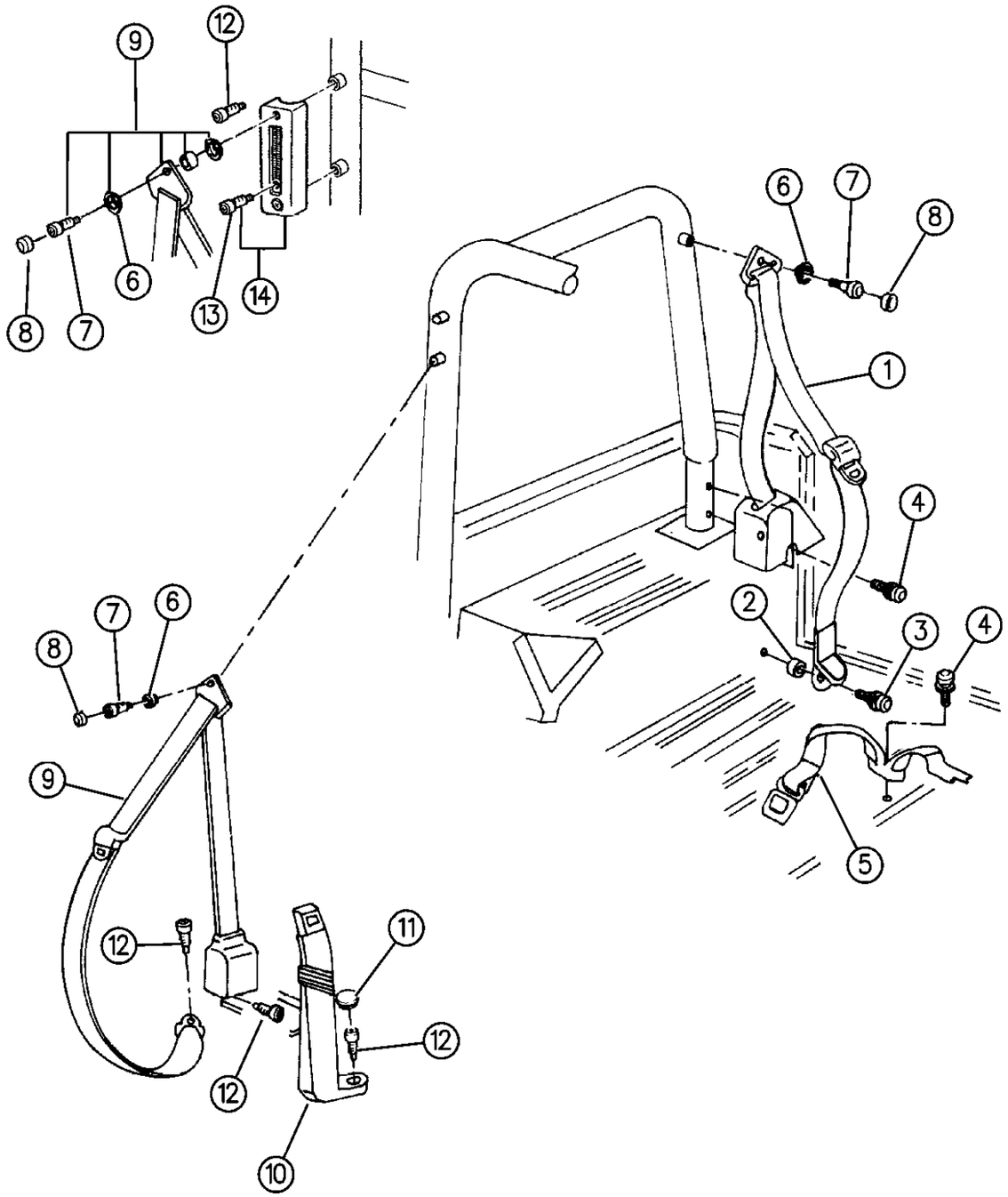

ITEM	PART NUMBER	QTY	BODY	MODEL	DESCRIPTION
1					BELT, Rear Seat Retractor Assembly (includes items 2,3,4,6 and 7)
					Right - Except EUROPE
	5531 4808	1			1994-95, Up to 1-23-95
	5521 7082	1			1995, After 1-23-95
					Left - Except EUROPE
	5531 4799	1			1994-95, Up to 1-23-95
	5521 7083	1			1995, After 1-23-95
	5502 9702-3	1			EUROPE
2					SPACER, (only serviced in seat belt assy - item 1)
3					BOLT, (only serviced in seat belt assy. - item 1)
4					FASTENER
	4664 040	AR			SCREW and WASHER, Buckle Floor Bolt, .437-20x1.20
	6034 450	AR			SCREW, .437-20x2.00
	J400 1934	2			FASTENER, (hole plug) used w/o seat belts, KDX - Egypt
5					BELT, Buckle Assembly, Rear Seat
	5502 9708	2			Except EUROPE
	5502 9704	2			EUROPE
-	J400 1934	2			FASTENER, Seat Belt Hole, KDX (w/o seat belts)
6	J400 7264	2			WASHER, Turning Loop Bolt
7	6034 457	2			BOLT, Turning Loop
8	J400 7263	2			CAP, Turning Loop Bolt
9					BELT, Front Seat Retractor Assembly (includes items 6 and 7)
					Right - Except EUROPE
	5531 4806	1			1994-95, Up to 1-23-95
	5521 7080	1			1995, After 1-23-95
					Left - Except EUROPE
	5531 4797	1			1994-95, Up to 1-23-95
	5521 7081	1			1995, 1-23-95
	5531 4764-5	1			EUROPE
	5531 4655	1			EUROPE - Austria, Left, (use w/traveling inboard buckle)
10					BELT, Buckle Assembly, Front Seat Inner (includes item 12)
					Passenger Seat
	5502 7660	1			Except EUROPE
	5531 4578	1			EUROPE
					Driver Seat
	5502 7661	1			Except EUROPE
	5531 4579	1			EUROPE
	5531 4547	1			EUROPE - Austria (w/traveling inboard buckle)
-	J400 7337	1			BOLT, EUROPE - Austria (seat belt to driver seat)
11	5502 6552	2			PLUG, Button, (1.31 diameter)
12					FASTENER

MODEL CODES:

72=2 DR Wagon
74=4 DR Wagon
77=Open Body 93" Whlbase
78=Open Body 103" Whlbase - Export
T=2WD
J,N=4WD
U=4WD (RHD)

BODY STYLES:

YJ=Wrangler (4X4) "S"
Weangler (4X4) SE
Wrangler (4X4) Sahara
Wrangler (4X4) Renegade
XJ=Cherokee SE
Cherokee Sport
Cherokee Country
ZJ=Grand Cherokee SE
Grand Cherokee Laredo
Grand Cherolee Limited
ZG=Grand Cherokee European
Y1=Wrangler
X1=Cherokee
Z1=Grand Cherokee
KDX=Vehicles

AR = Use as Required - = Non Illustrated Part P.A.R. = Paint as Required

SEAT BELTS WRANGLER - YJ
Figure IYJ-710

IYJ-710A

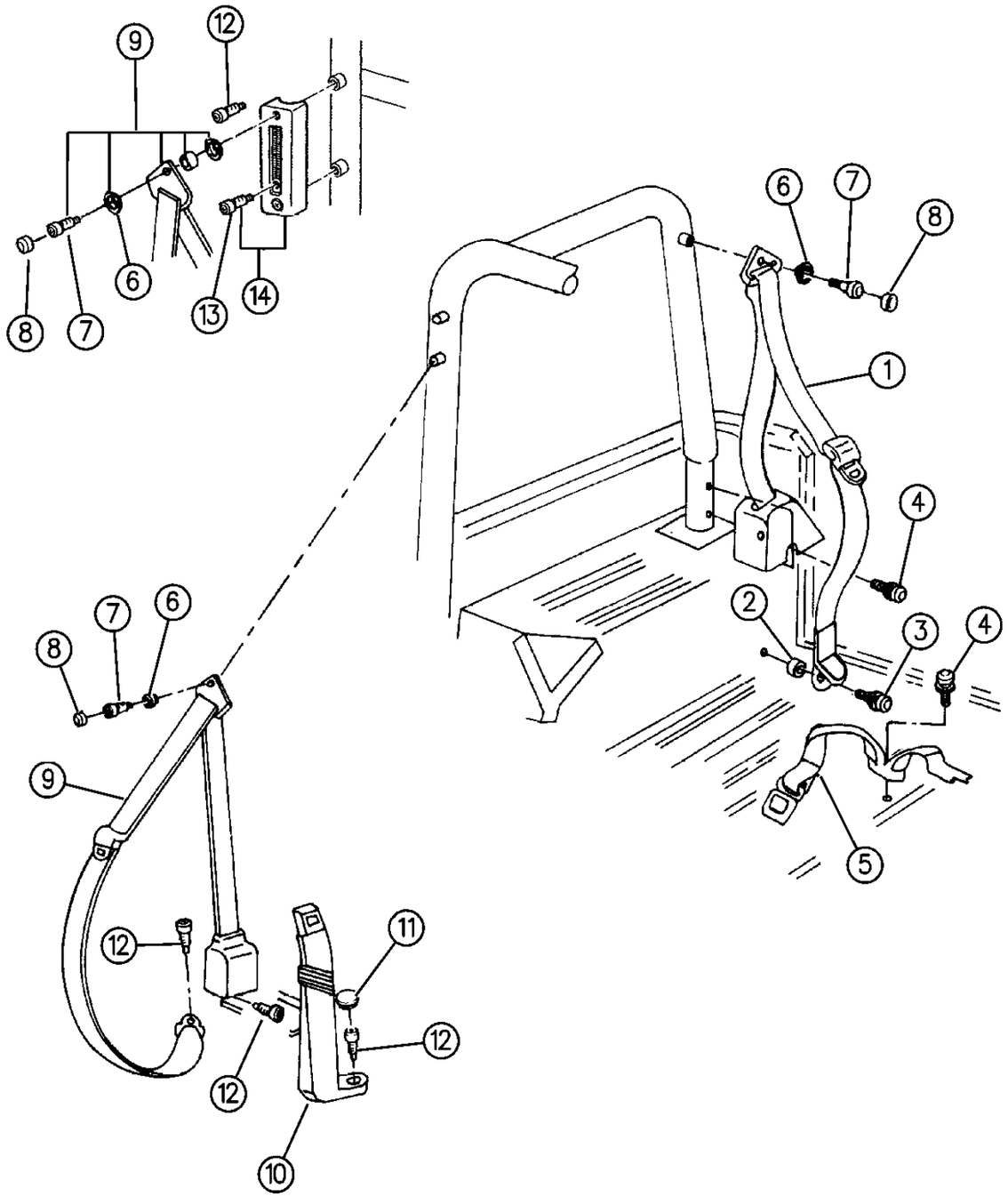

ITEM	PART NUMBER	QTY	BODY	MODEL	DESCRIPTION
	6034 385	AR			SCREW and WASHER, Buckle to Floor Bolt, .437-20x1.380
	6034 450	AR			SCREW, .437-20-2.00
	J400 1934	2			FASTENER, (hole plug) used w/o seat belts, KDX - Egypt
13	6502 985	2			BOLT, EUROPE
14	5531 4697	2			ADJUSTER, Turning Loop, EUROPE
-	J400 4888	1	Y1		PLUG, Rear Seat Belt Hole (for vehicles w/lap belts), KDX - Egypt
NOTE: Seat belt extenders are also in the accessory catalog. e Adhesive #312.					
-	8350 5482	1			EXTENDER, Seat Belt

MODEL CODES:

72=2 DR Wagon
74=4 DR Wagon
77=Open Body 93" Whlbase
78=Open Body 103" Whlbase - Export
T=2WD
J,N=4WD
U=4WD (RHD)

BODY STYLES:

YJ=Wrangler (4X4) "S"
Weangler (4X4) SE
Wrangler (4X4) Sahara
Wrangler (4X4) Renegade

XJ=Cherokee SE
Cherokee Sport
Cherokee Country

ZJ=Grand Cherokee SE
Grand Cherokee Laredo
Grand Cherolee Limited
ZG=Grand Cherokee European

Y1=Wrangler
X1=Cherokee
Z1=Grand Cherokee
KDX=Vehicles

AR = Use as Required - = Non Illustrated Part P.A.R. = Paint as Required

SEAT ASSEMBLIES, SEAT COVERS AND SEAT TRACKS FRONT SEAT WRANGLER - YJ, 1994
Figure IYJ-505

IYJ-810

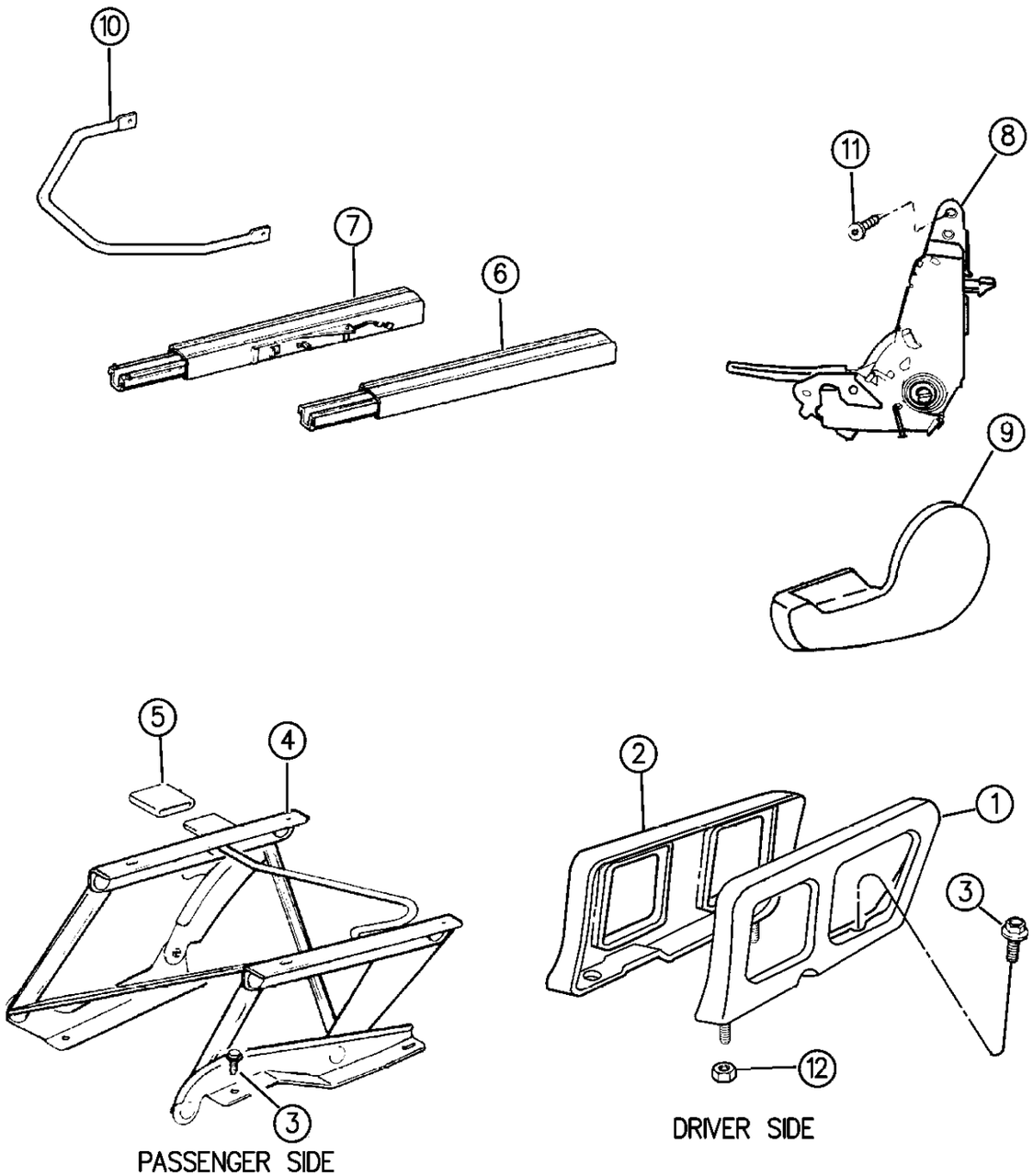

ITEM	PART NUMBER	QTY	BODY	MODEL	DESCRIPTION
1	4638 616	1			RISER, Driver Seat, Outboard
2	4638 615	1			RISER, Driver Seat, Inboard Side
-	6025 011	2			NUT, (driver seat riser to floor pan)
NOTE: Vehicles built for Austria w/Traveling inboard belts require the following parts. e Adhesive #312.					
-	4713 461	1			RISER ASSEMBLY, Driver Seat, EUROPE - Austria ***
-	5519 5131	1			REINFORCEMENT, Left Travel Cable Anchor Plug Unused Hole, EUROPE - Austria
3	J545 0077	AR			BOLT, use 2 for driver side or 4 for passenger side.
4	4637 904	1			LINKAGE ASSY., 4 Bar, Passenger ***
5	J545 8945	1			PROTECTOR
6	4638 613	2			TRACK, Passenger Seat Outboard, Driver Seat Inboaord
-	4638 915	1			TRACK, EUROPE - Austria (used on driver seat outboard w/ Traveling Inboard Buckle)
7	4638 614	2			TRACK, Driver Seat Outboard or Passenger Seat Inboard
-	4638 914	1			TRACK, EUROPE - Austria (used on driver seat inboard - w/ Traveling Inboard Buckle)
8					RECLINER ASSEMBLY ***
	4637 905	1			Driver seat, (includes lever)
	4637 906	1			Passenger Seat
-	4637 920-1	1			PLATE, Used On Non-Reclining Seats
9	4637 908-9	1			COVER, Recliner, P.A.R.
10	4638 586	2			HANDLE, SEAT Adjusting
11	4638 582	8			BOLT, Torx, Seat Recliner Attaching
12	6025 011	2			NUT, Driver Seat Riser Mounting

MODEL CODES:

72=2 DR Wagon
74=4 DR Wagon
77=Open Body 93" Whlbase
78=Open Body 103" Whlbase - Export
T=2WD
J,N=4WD
U=4WD (RHD)

BODY STYLES:

YJ=Wrangler (4X4) "S"
Weangler (4X4) SE
Wrangler (4X4) Sahara
Wrangler (4X4) Renegade
XJ=Cherokee SE
Cherokee Sport
Cherokee Country
ZJ=Grand Cherokee SE
Grand Cherokee Laredo
Grand Cherolee Limited
ZG=Grand Cherokee European
Y1=Wrangler
X1=Cherokee
Z1=Grand Cherokee
KDX=Vehicles

AR = Use as Required - = Non Illustrated Part P.A.R. = Paint as Required

« RETURN TO GROUP INDEX

SEAT ASSEMBLIES, SEAT COVERS AND SEAT TRACKS FRONT SEAT WRANGLER, YJ
Figure IYJ-820

IYJ-820

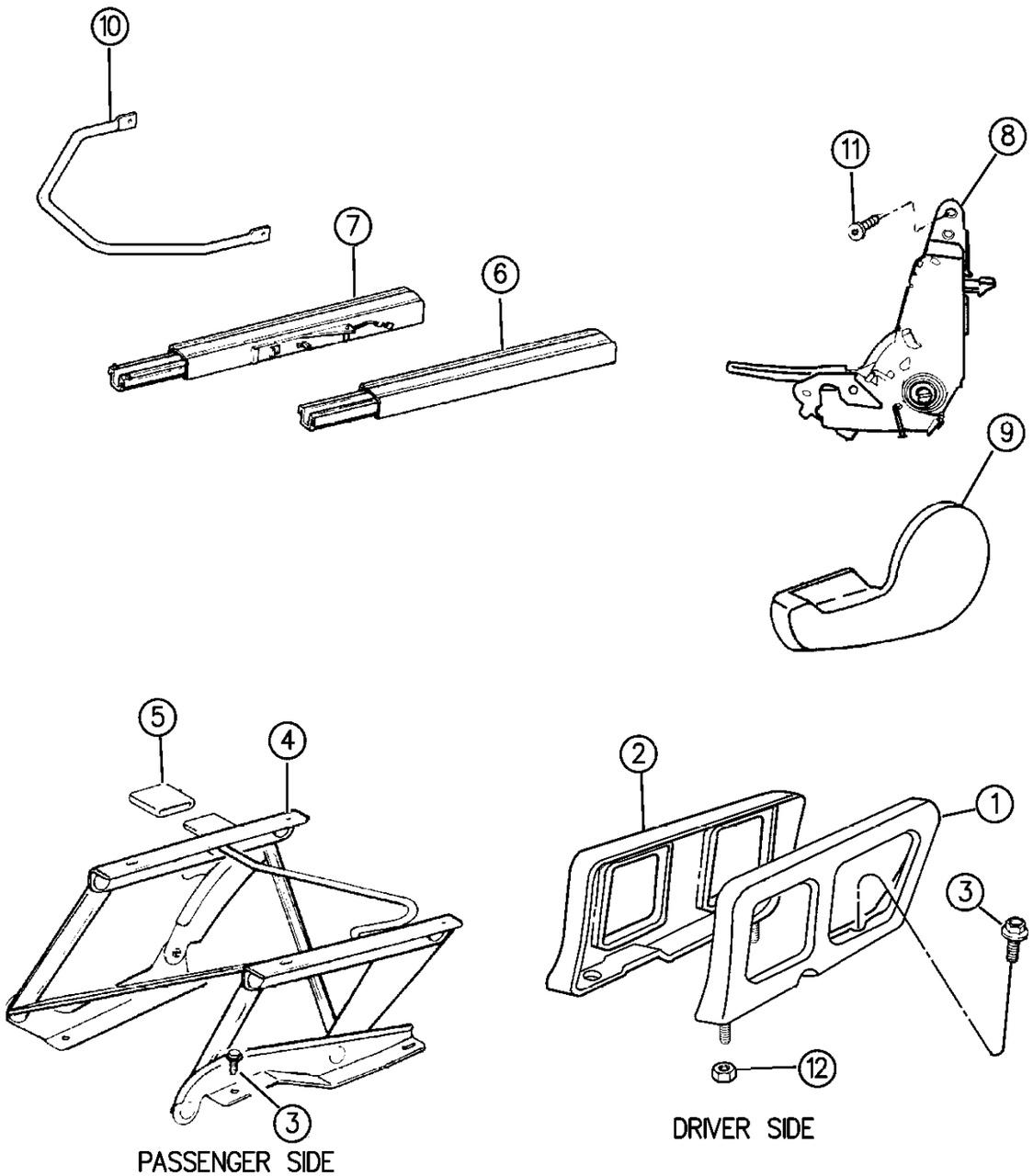

94J27 820

ITEM	PART NUMBER	QTY	BODY	MODEL	DESCRIPTION
1	4638 616	1			RISER, Driver Seat, Outboard
2	4638 615	1			RISER, Drivers, Seat, Inboard
	4713 461	1			RISER ASSEMBLY, Driver Seat, EUROPE ***
3	J545 0077	AR			BOLT, Use 2 for Drivers Side and 4 For Passengers Side
4					LINKAGE ASSY., 4 Bar, Passenger ***
	4798 444	1			
	4798 401	1			R.H.D.
5	J545 8945	1			PROTECTOR
6	4638 613	2			ADJUSTER, Passenger Seat Outboard or Driver Seat Inboard
	4638 915	1			ADJUSTER, AUSTRIA, Driver Seat Outboard w/Traveling Inboard Buckle
7	4638 614	2			ADJUSTER, Driver Seat Outboard or Passenger Seat Inboard
	4638 914	1			ADJUSTER, AUSTRIA, Used On Driver Seat Inboard w/ Traveling Inboard Buckle
8					RECLINER ASSEMBLY ***
	4637 905	1			Drivers Seat, Includes lever
	4637 906	1			Passenger Seat
-	4637 920-1	1			PLATE, Used on Non-Reclining Seats
9	4637 908-9	1			COVER, Recliner, P.A.R.
10	4638 586	2			HANDLE, Seat Adjusting
11	4638 582	8			BOLT, Torx Seat Recliner Attaching
12	6025 011	2			NUT, Driver Seat Riser Mounting

MODEL CODES:

72=2 DR Wagon
74=4 DR Wagon
77=Open Body 93" Whlbase
78=Open Body 103" Whlbase - Export
T=2WD
J,N=4WD
U=4WD (RHD)

BODY STYLES:

YJ=Wrangler (4X4) "S"
Weangler (4X4) SE
Wrangler (4X4) Sahara
Wrangler (4X4) Renegade
XJ=Cherokee SE
Cherokee Sport
Cherokee Country
ZJ=Grand Cherokee SE
Grand Cherokee Laredo
Grand Cherolee Limited
ZG=Grand Cherokee European
Y1=Wrangler
X1=Cherokee
Z1=Grand Cherokee
KDX=Vehicles

AR = Use as Required - = Non Illustrated Part P.A.R. = Paint as Required

« RETURN TO GROUP INDEX

SAGIPARTS

INTERIOR TRIM GROUP CONTENT
IXJ CHEROKEE

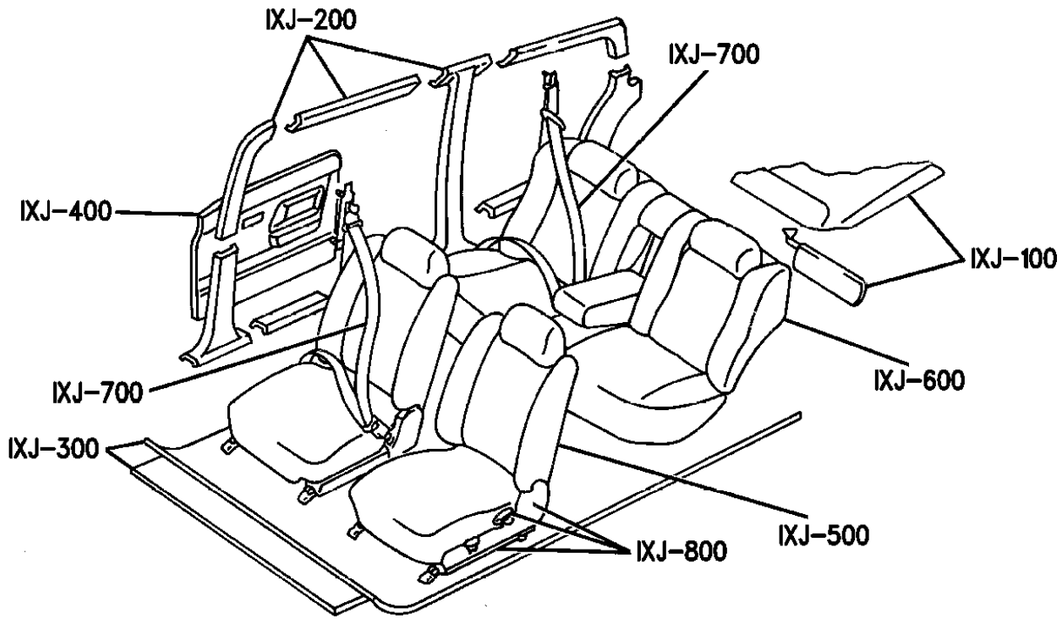

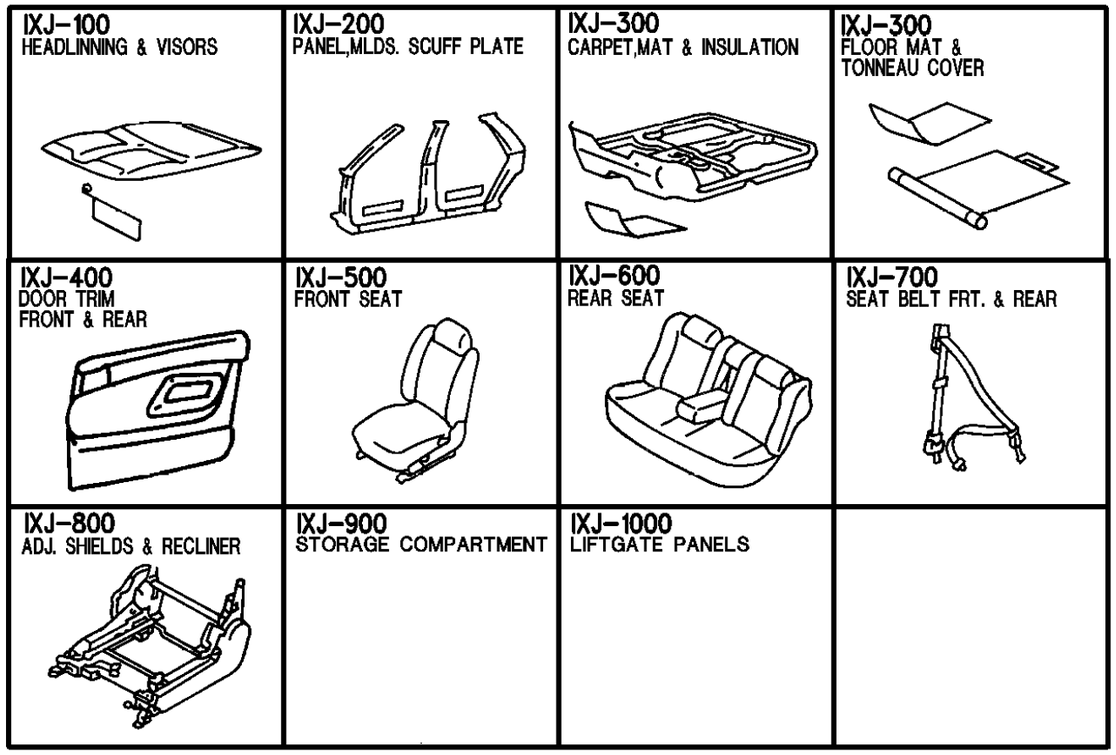

GROUP IXJ - INTERIOR TRIM CHEROKEE

ILLUSTRATION TITLE	GROUP-FIG. NO.
TRIM CODES DEFINED	
TRIM CODE DEFINED CHEROKEE	Fig. IXJ-99
HEADLINER, UPPER MOULDINGS AND VISORS	
HEADLINER AND UPPER TRIM MOULDINGS CHEROKEE	Fig. IXJ-110
VISORS AND VANITY MIRRORS CHEROKEE	Fig. IXJ-120
INTERIOR TRIM PANELS - FRONT AND REAR	
PANELS, INTERIOR TRIM, FRONT CHEROKEE 2 DOOR	Fig. IXJ-210
PANELS, INTERIOR TRIM, REAR CHEROKEE 2 DOOR	Fig. IXJ-215
PANELS, INTERIOR TRIM, FRONT CHEROKEE 4 DOOR	Fig. IXJ-220
PANELS, INTERIOR TRIM, REAR CHEROKEE 4 DOOR	Fig. IXJ-225
CARPETS, INSULATION AND CARGO COVER	
CARPETS AND MATS CHEROKEE	Fig. IXJ-310
INSULATION CHEROKEE	Fig. IXJ-320
COVER, CARGO CHEROKEE	Fig. IXJ-330
DOOR TRIM PANELS	
PANELS, DOOR TRIM TYPE 1 (WITH UPPER GARNISH MOULDINGS) CHEROKEE 4 DOOR	Fig. IXJ-405
INTERIOR TRIM PARTS, DOOR CHEROKEE	Fig. IXJ-410
PANELS, DOOR TRIM CHEROKEE 2 DOOR	Fig. IXJ-415
PANELS, DOOR TRIM TYPE 2 (WITHOUT UPPER GARNISH MOULDINGS) CHEROKEE 4 DOOR	Fig. IXJ-420
SEATS - FRONT, FRAME AND PADS	
FRAME AND PAD - 1994 BUCKET SEATS CHEROKEE 2 DOOR	Fig. IXJ-505
FRAME AND PAD- 1994 BUCKET SEATS CHEROKEE 4 DOOR	Fig. IXJ-510
COVERS, SEAT UPHOLSTERY CHEROKEE, 1994	Fig. IXJ-520
COVERS, SEAT UPHOLSTERY CHEROKEE, 1995-96	Fig. IXJ-530
SEATS - REAR, FRAME AND PAD AND SEAT UPHOLSTERY	
FRAME AND PAD REAR SEAT CHEROKEE	Fig. IXJ-605
COVERS, SEAT UPHOLSTERY CHEROKEE, 1994	Fig. IXJ-610
COVERS, SEAT UPHOLSTERY CHEROKEE, 1995-96	Fig. IXJ-620
SEAT BELTS - FRONT AND REAR	
SEAT BELTS, FRONT SEAT CHEROKEE 2 DOOR	Fig. IXJ-710
SEAT BELTS, FRONT SEAT CHEROKEE 4 DOOR	Fig. IXJ-720
SEAT BELTS, FRONT, W/TRAVELLING INBOARD BUCKLE EUROPE-AUSTRIA CHEROKEE	Fig. IXJ-730
SEATBELTS, REAR SEAT CHEROKEE	Fig. IXJ-740
SEAT TRACKS	
TRACKS, LESS POWER SEATS BUCKET SEAT CHEROKEE 1994	Fig. IXJ-810
TRACKS, WITH POWER SEATS BUCKET SEAT CHEROKEE 1994	Fig. IXJ-820

GROUP IXJ - INTERIOR TRIM CHEROKEE

ILLUSTRATION TITLE **GROUP-FIG. NO.**

SEAT TRACKS (Continued)

TRACKS, WITH POWER SEATS BUCKET SEAT CHEROKEE 1994 . . . . . Fig. IXJ-820
RECLINER AND ADJUSTER FRONT SEAT XJ, 1995-96 . . . . . Fig. IXJ-830

TRIM CODE DEFINED CHEROKEE
Figure IXJ-99

IXJ–099

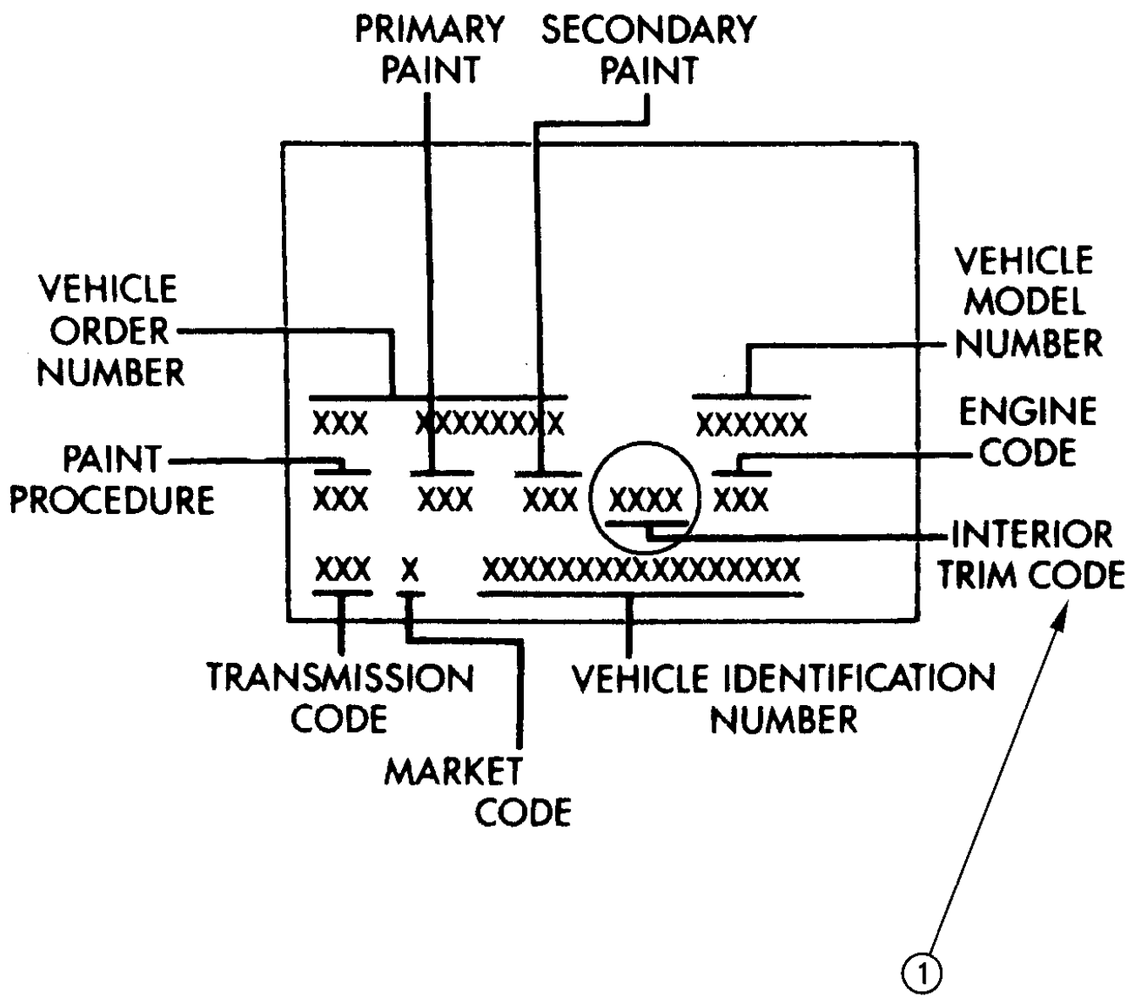

94J43 099

ITEM	PART NUMBER	QTY	BODY	MODEL	DESCRIPTION
NOTE: The body code plate is located on the left side of the dash panel in the engine compartment. e Adhesive #312.					
1					INTERIOR TRIM CODE (4 DIGET) ***
NOTE: THE FIRST TWO DIGITS OF THE CODE INDICATE THE SEAT STYLE. e Adhesive #312.					
AL-- Bucket seats w/"non-perforated leather" inserts - XJ. e Adhesive #312.					
XL-- Bucket seats w/"perforated leather" inserts - XJ. e Adhesive #312.					
Q7-- Bucket seats w/"Luggage cloth" inserts - XJ e Adhesive #312.					
A7-- Bucket seats w/"Jamaica cloth" inserts - XJ e Adhesive #312.					
NOTE: The LAST TWO DIGITS OF THE CODE INDICATE THE INTERIOR COLOR. e Adhesive #312.					
--H9 = Cordovan e Adhesive #312.					
--SA = Charcoal e Adhesive #312.					
--Y6 = Dark Sand e Adhesive #312.					

MODEL CODES:

72=2 DR Wagon	77=Open Body 93" Whlbase	T=2WD	U=4WD (RHD)
74=4 DR Wagon	78=Open Body 103" Whlbase - Export	J,N=4WD	

BODY STYLES:

YJ=Wrangler (4X4) "S"	XJ=Cherokee SE	ZJ=Grand Cherokee SE	Y1=Wrangler
Weangler (4X4) SE	Cherokee Sport	Grand Cherokee Laredo	X1=Cherokee
Wrangler (4X4) Sahara	Cherokee Country	Grand Cherolee Limited	Z1=Grand Cherokee
Wrangler (4X4) Renegade		ZG=Grand Cherokee European	KDX=Vehicles

AR = Use as Required - = Non Illustrated Part P.A.R. = Paint as Required

HEADLINER AND UPPER TRIM MOULDINGS CHEROKEE
Figure IXJ-110

IXJ–110

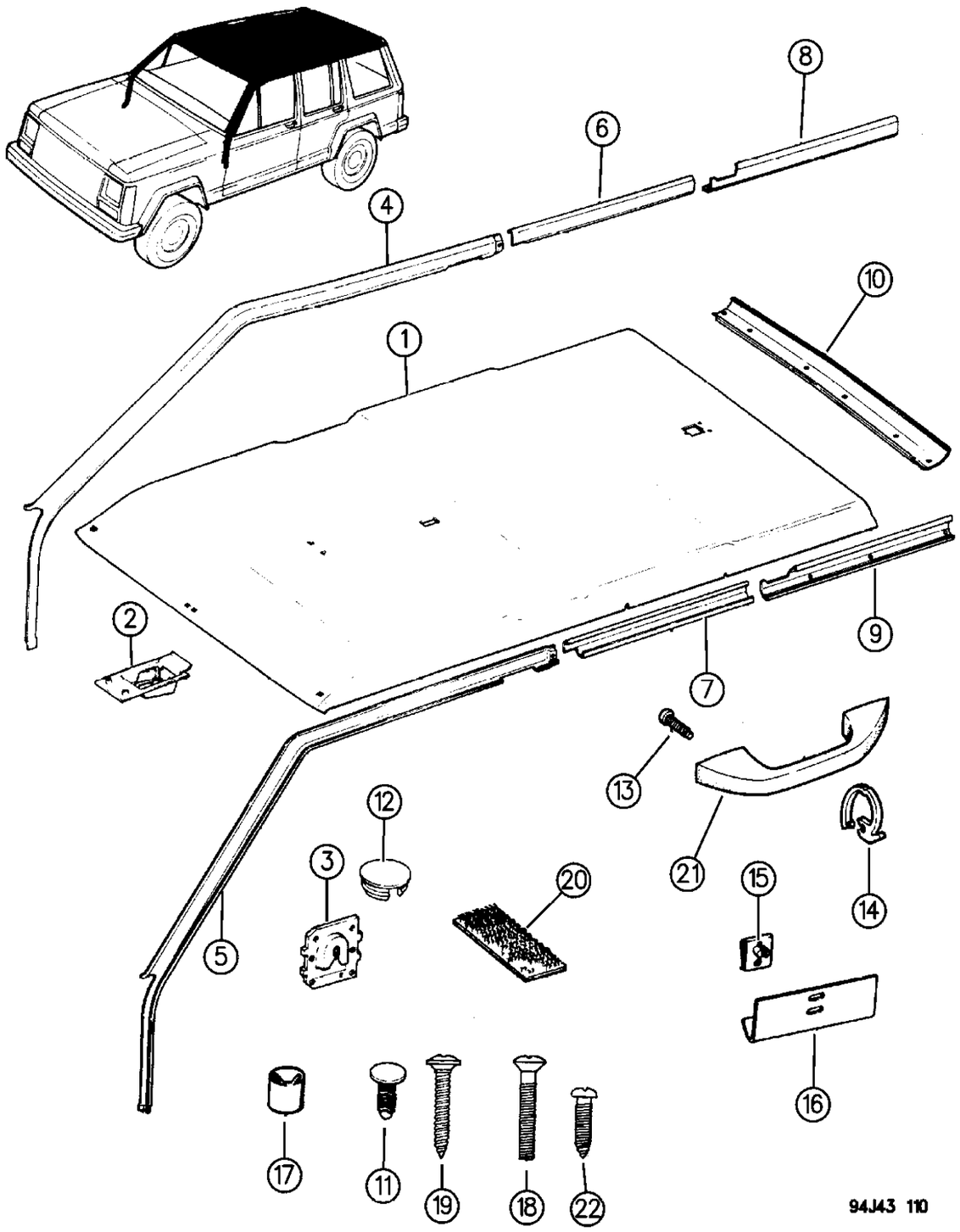

ITEM	PART NUMBER	QTY	BODY	MODEL	DESCRIPTION
1					HEADLINER
					Less Holes
	MV32 RS1	1			Charcoal
	MV32 RY6	1			Sand
					w/Sound Bar
	5ES6 2RS1	1			Charcoal
	5ES6 2RY6	1			Sand
	5DG4 0LS1	1			Charcoal, EUROPE, Commercial Package
					w/KDX (Egypt Only)
					1994,95
	5DX8 2PS1	1			Charcoal
	5DX8 2PY6	1			Sand
					1996
	5EX8 8RS1	1			Charcoal
	5EX8 8RY6	1			Sand
NOTE: For 1994 vehicles w/Export Equipment Package the following part will service the restraint holes in the headliner. e Adhesive #312.					
-					PLUG, Headliner Restraint Hole, EUROPE
					1994
-	5DK1 9MS1	3			Charcoal, EUROPE
-	5DK1 9MY6	3			Dark Sand, EUROPE
2	5DH5 5MS1	1			HOUSING, Keyless Entry, P.A.R.
3	3420 1299	AR			CLIP, Windshield Garnish Moulding
4					MOULDING, Garnish, Right
	5AD6 8KY6	1			4 Door, P.A.R.
	5AD7 2KY6	1			2 Door, P.A.R.
5					MOULDING, Garnish, Left
	5AD6 9KY6	1			4 Door, P.A.R.
	5AD7 3KY6	1			2 Door, Left Hand Drive, P.A.R.
	5CN6 1MY6	1			2 Door, Right Hand Drive, P.A.R.
6	5AC6 2JS1	1			MOULDING, Headliner, 4 Door , P.A.R., Right
7	5AC6 3JS1	1			MOULDING, Headliner, 4 Door , P.A.R., Left
8					MOULDING, Headlining, Right, P.A.R.
	5AC2 6KY6	1			4 Door
	5AD7 4KY6	1			2 Door
9					MOULDING, Headlining, Left, P.A.R.
	5AC2 7KY6	1			4 Door
	5AD7 5KY6	1			2 Door
10	5AC8 2KY6	1			MOULDING, Lift Door, P.A.R.
11	3420 1545	6			FASTENER, Garnish Moulding
12					PLUG
	AW91 HS1	4			Charcoal

MODEL CODES:

72=2 DR Wagon
74=4 DR Wagon
77=Open Body 93" Whlbase
78=Open Body 103" Whlbase - Export
T=2WD
J,N=4WD
U=4WD (RHD)

BODY STYLES:

YJ=Wrangler (4X4) "S"
Weangler (4X4) SE
Wrangler (4X4) Sahara
Wrangler (4X4) Renegade
XJ=Cherokee SE
Cherokee Sport
Cherokee Country
ZJ=Grand Cherokee SE
Grand Cherokee Laredo
Grand Cherolee Limited
ZG=Grand Cherokee European
Y1=Wrangler
X1=Cherokee
Z1=Grand Cherokee
KDX=Vehicles

AR = Use as Required - = Non Illustrated Part P.A.R. = Paint as Required

HEADLINER AND UPPER TRIM MOULDINGS CHEROKEE
Figure IXJ-110

IXJ–110

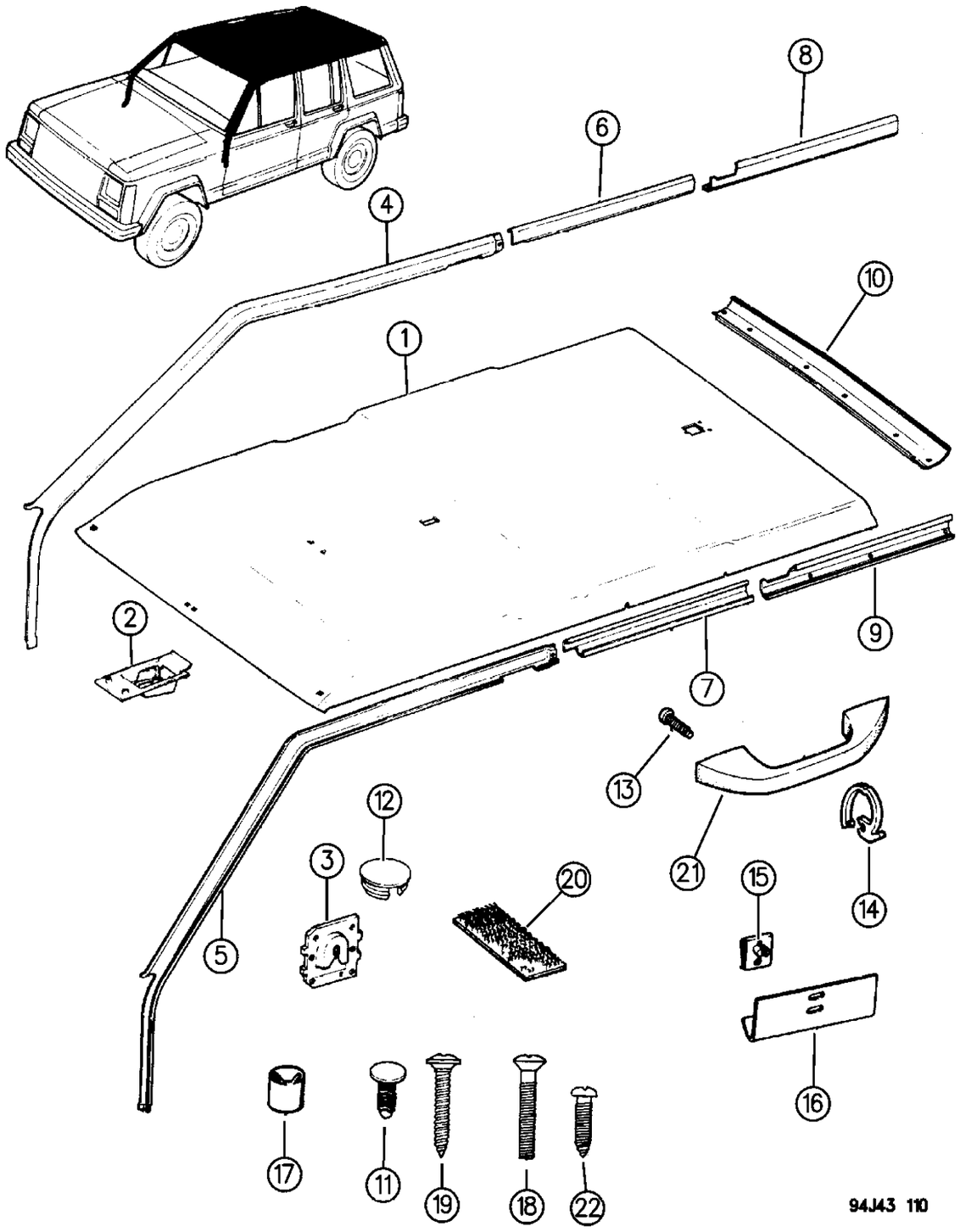

ITEM	PART NUMBER	QTY	BODY	MODEL	DESCRIPTION
	AW91 KY6	4			Dark Sand
13	3420 2189	6			SCREW
14					HOOK, Coat
	5AD9 1JS1	2			Charcoal
	5AD9 1KY6	2			Dark Sand
15	J400 0322	4			CLIP, Headliner Mounting, "U" Type
16	J368 1225	4			RETAINER, Headliner Mounting
17	5500 2520	2	72		SPACER, Headliner/Side Rear Moulding
18	1150 1150	10			SCREW, w/7mm head, Headliner Side Moulding
19	J400 6563	6			SCREW, w/9mm head, Headliner Side Moulding
20	5500 6362	2			FASTENER, Velcro Hook, Header to Headliner
21					HANDLE, Assist (Includes Covers for Mounting Screws)
	5CX1 0LS1	AR			Charcoal
	5CX1 0LY6	AR			Dark Sand
22	J400 2465	4			SCREW, Windshield Garnish Moulding

MODEL CODES:

72=2 DR Wagon
74=4 DR Wagon
77=Open Body 93" Whlbase
78=Open Body 103" Whlbase - Export
T=2WD
J,N=4WD
U=4WD (RHD)

BODY STYLES:

YJ=Wrangler (4X4) "S"
Weangler (4X4) SE
Wrangler (4X4) Sahara
Wrangler (4X4) Renegade

XJ=Cherokee SE
Cherokee Sport
Cherokee Country

ZJ=Grand Cherokee SE
Grand Cherokee Laredo
Grand Cherolee Limited
ZG=Grand Cherokee European

Y1=Wrangler
X1=Cherokee
Z1=Grand Cherokee
KDX=Vehicles

AR = Use as Required - = Non Illustrated Part P.A.R. = Paint as Required

VISORS AND VANITY MIRRORS CHEROKEE
Figure IXJ-120

IXJ-120

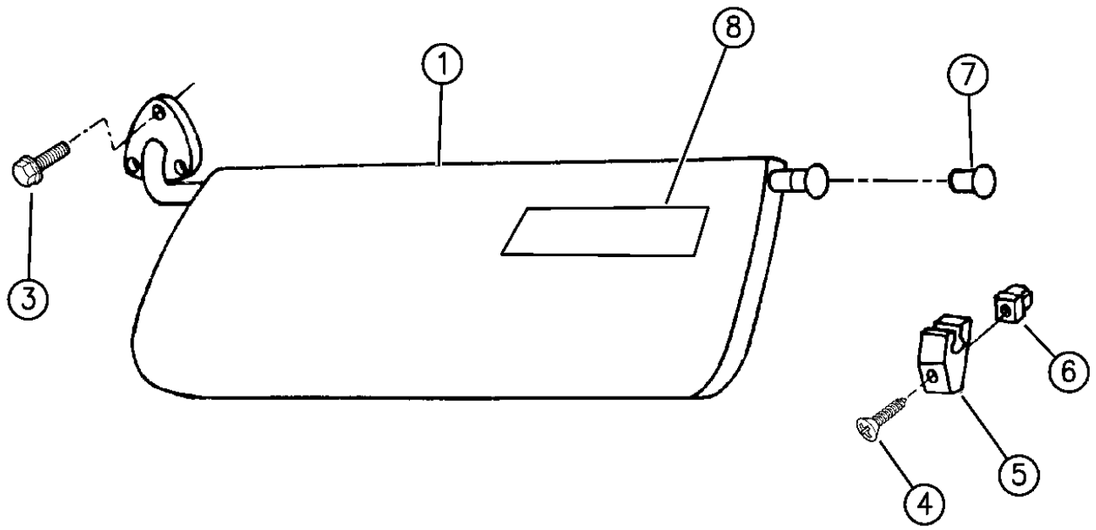

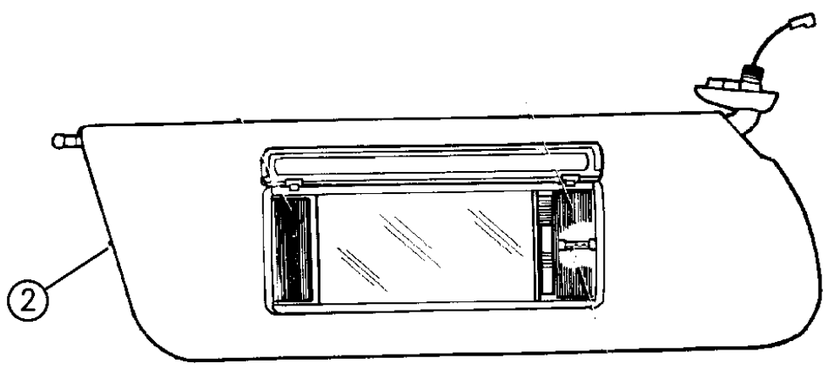

94J43 120

ITEM	PART NUMBER	QTY	BODY	MODEL	DESCRIPTION
1					VISOR ASSEMBLY, Non-Lighted ***
					Right
					1994,95,96
	5CT5 4KS1	1			Charcoal
	5CT5 4KY6	1			Sand
					1994, R.H.D.
	5DL9 2MS1	1			Charcoal
	5DL9 2MY6	1			Sand
					1995, R.H.D.
	5EN5 2RS1	1			Charcoal
	5EN5 2RY6	1			Sand
					1996, R.H.D.
	5FK7 4SS1	1			Charcoal
	5FK7 4SY6	1			Sand
					Left
					1994, (Domestic and R.H.D.)
	5CT5 5KS1	1			Charcoal
	5CT5 5KY6	1			Sand
					1995
	5EN6 7RS1	1			Charcoal
	5EN6 7RY6	1			Sand
					1996
	5FK7 3SS1	1			Charcoal
	5FK7 3SY6	1			Dark Sand
					1995,96, R.H.D.
	5EN3 7RS1	1			Charcoal
	5EN3 7RY6	1			Sand
2					VISOR ASSEMBLY, Lighted ***
					Right
					1994,95
	5CG3 4KS1	1			Charcoal
	5CG3 4KY6	1			Sand
					1996
	5FG7 1SS1	1			Charcoal
	5FG7 1SY6	1			Sand
					1994, R.H.D.
	5DL9 0MS1	1			Charcoal
	5DL9 0MY6	1			Sand
					1995, R.H.D.
	5EN5 0RS1	1			Charcoal
	5EN5 0RY6	1			Sand
					1996, R.H.D.

MODEL CODES:

72=2 DR Wagon
74=4 DR Wagon
77=Open Body 93" Whlbase
78=Open Body 103" Whlbase - Export
T=2WD
J,N=4WD
U=4WD (RHD)

BODY STYLES:

YJ=Wrangler (4X4) "S"
Weangler (4X4) SE
Wrangler (4X4) Sahara
Wrangler (4X4) Renegade
XJ=Cherokee SE
Cherokee Sport
Cherokee Country
ZJ=Grand Cherokee SE
Grand Cherokee Laredo
Grand Cherolee Limited
ZG=Grand Cherokee European
Y1=Wrangler
X1=Cherokee
Z1=Grand Cherokee
KDX=Vehicles

AR = Use as Required - = Non Illustrated Part P.A.R. = Paint as Required

VISORS AND VANITY MIRRORS CHEROKEE
Figure IXJ-120

IXJ–120

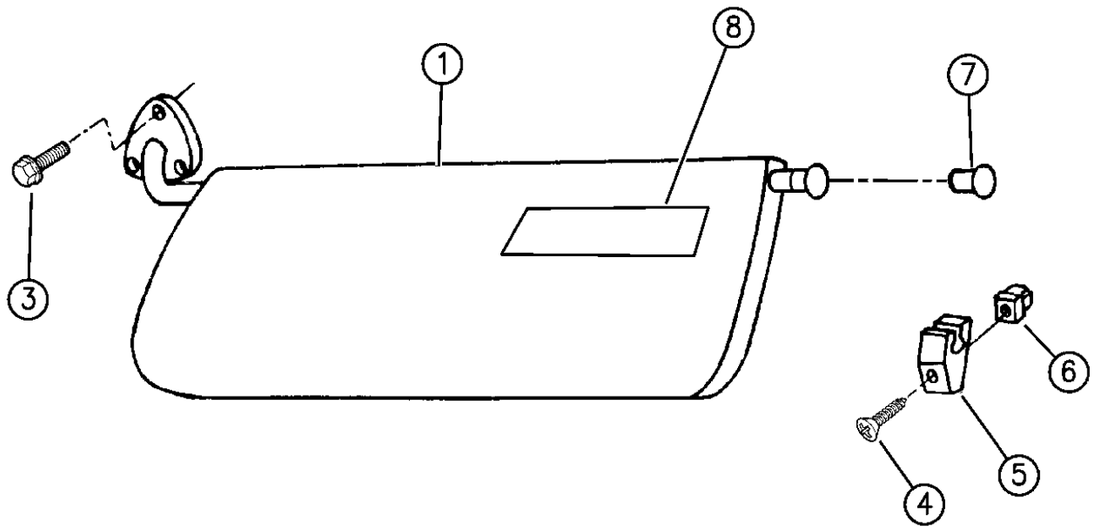

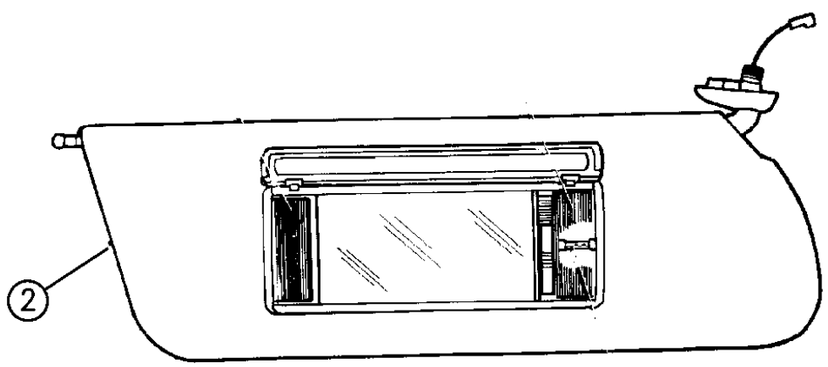

94J43 120

ITEM	PART NUMBER	QTY	BODY	MODEL	DESCRIPTION
	5FK7 6SS1	1			Charcoal
	5FK7 6SY6	1			Sand
					Left
					1994, (Domestic and R.H.D.)
	5CG3 5KS1	1			Charcoal
	5CG3 5KY6	1			Sand
					1995
	5EN6 5RS1	1			Charcoal
	5EN6 5RY6	1			Sand
					1996
	5FK7 5SS1	1			Charcoal
	5FK7 5SY6	1			Sand
					1995, R.H.D.
	5EN3 5RS1	1			Charcoal
	5EN3 5RY6	1			Sand
					1996, R.H.D.
	5FG7 6SS1	1			Charcoal
	5FG7 6SY6	1			Sand
3	1150 1150	6			SCREW
4	3420 1398	4			SCREW, Clip Mounting
5					CLIP
	DF49 JS1	1			Charcoal
	DF49 KY6	1			Sand
6	J400 5242	2			NUT, Push In
7					TIP, Used w/non lighted sunvisor
	H315 JS1	2			Charcoal
	H315 KY6	2			Dark Sand
8					LABEL
	5500 9558	1			LABEL, Left Visor, Closed Body Warning (FRENCH)
					LABEL, S/TRAC Shift Pattern
	5300 8695	1			English, w/231
	5300 8693	1			English, w/242
	5300 8696	1			Bilangual, w/231
	5300 8694	1			Bilangual, w/242
					LABEL, Sleeve - Diesel Starting Instructions
	5200 6337	1			English
	5521 4516	1			French

MODEL CODES:

72=2 DR Wagon
74=4 DR Wagon
77=Open Body 93" Whlbase
78=Open Body 103" Whlbase - Export
T=2WD
J,N=4WD
U=4WD (RHD)

BODY STYLES:

YJ=Wrangler (4X4) "S"
Weangler (4X4) SE
Wrangler (4X4) Sahara
Wrangler (4X4) Renegade
XJ=Cherokee SE
Cherokee Sport
Cherokee Country
ZJ=Grand Cherokee SE
Grand Cherokee Laredo
Grand Cherolee Limited
ZG=Grand Cherokee European
Y1=Wrangler
X1=Cherokee
Z1=Grand Cherokee
KDX=Vehicles

AR = Use as Required - = Non Illustrated Part P.A.R. = Paint as Required

PANELS, INTERIOR TRIM, FRONT CHEROKEE 2 DOOR
Figure IXJ-210

IXJ-210

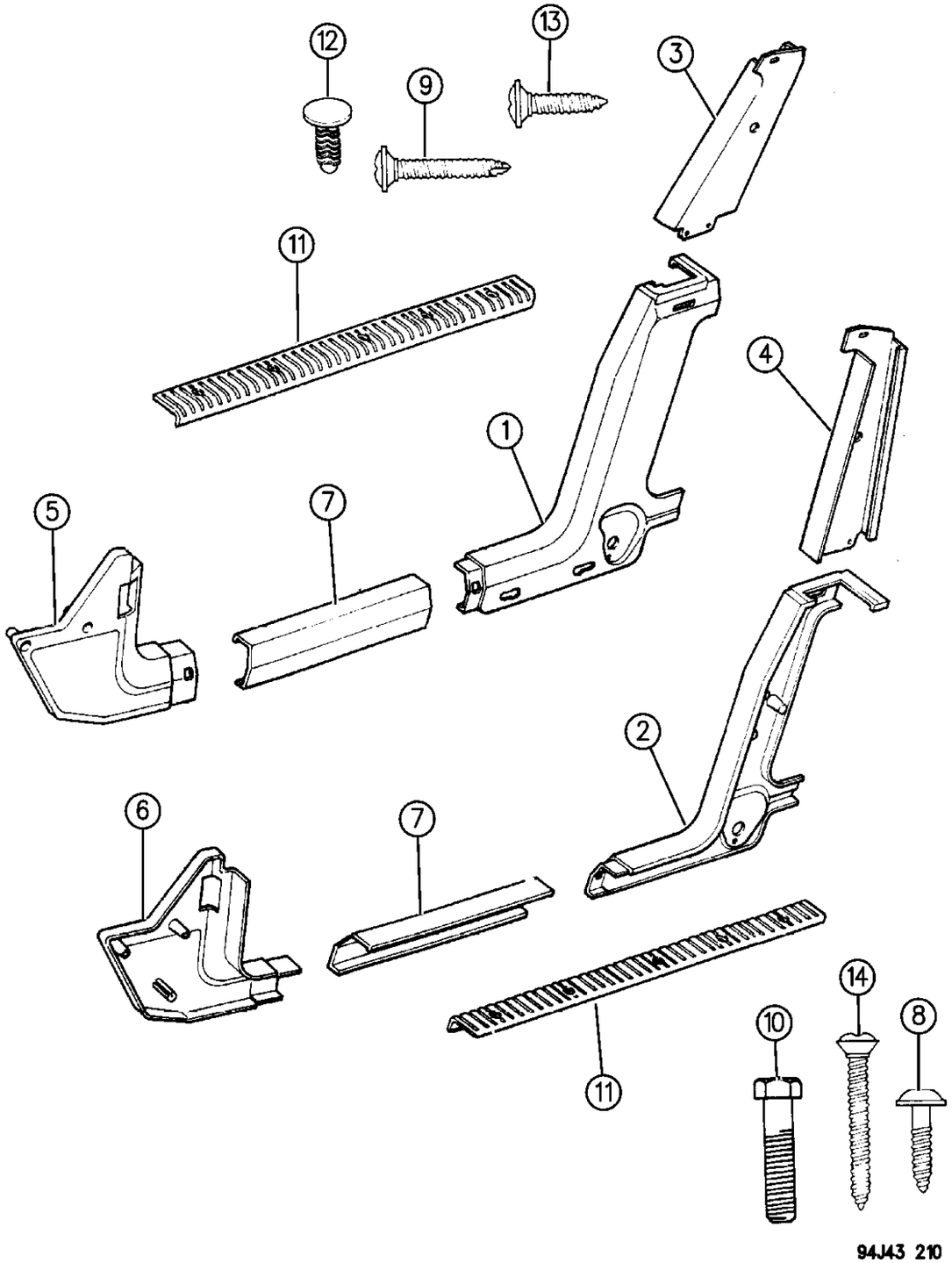

ITEM	PART NUMBER	QTY	BODY	MODEL	DESCRIPTION
1-2					PANEL, Quarter Trim, P.A.R.
	5DP20-1 PY6	1			Up to 12-21-95
	5EW90-1 SY6	1			After 12-21-95
3-4					COVER, Lock Pillar
					Except EUROPE
	5AC76-7 JS1	1			Charcoal
	5AC76-7 KY6	1			Dark Sand
					EUROPE, Includes Bezel Assembly w/adjust D ring
	5BF98-9 KS1	1			Charcoal, EUROPE
	5BF98-9 KY6	1			Dark Sand, EUROPE
5-6					PANEL, Cowl Trim, P.A.R.
					P.A.R.
	5DT38-9 MY6	1			Up to 12-21-95
	5EW70-1 SY6	1			After 12-21-95
					R.H.D., Up to 12-21-95
	5DM78-9 MS1	1			Charcoal
	5DM78-9 MY6	1			Dark Sand
					R.H.D., After 12-21-95
	5EW74-5 SS1	1			Charcoal
	5EW74-5 SY6	1			Dark Sand
7					PLATE, Inner Scuff
					1994
	5AC4 4JS1	2			Charcoal
	5AC4 4KY6	2			Dark Sand
					1995,96, Up to 12-21-95
	5DS54-5 RS1	2			Charcoal
	5DS54-5 RY6	2			Sand
					1996, After 12-21-95
	5EW78-9 SS1	2			Charcoal
	5EW78-9 SY6	2			Sand
8	3420 1314	8			SCREW, 13mm Long
9	3420 1468	2			SCREW, 25mm Long
10					SCREW
	1150 3059	4			20mm Long
	3420 1540	2			30mm Long
11	5500 3374	2			PLATE, Scuff
12	3420 1545	4			FASTENER, Push
13	3420 1403	10			SCREW, 13mm Long
14					SCREW
	3420 1400	10			1994-95-96, Up to 1-5-96, .164-18x.575
	6035 658	10			1996, .164-18x1.25

MODEL CODES:

72=2 DR Wagon
74=4 DR Wagon
77=Open Body 93" Whlbase
78=Open Body 103" Whlbase - Export
T=2WD
J,N=4WD
U=4WD (RHD)

BODY STYLES:

YJ=Wrangler (4X4) "S"
Weangler (4X4) SE
Wrangler (4X4) Sahara
Wrangler (4X4) Renegade
XJ=Cherokee SE
Cherokee Sport
Cherokee Country
ZJ=Grand Cherokee SE
Grand Cherokee Laredo
Grand Cherolee Limited
ZG=Grand Cherokee European
Y1=Wrangler
X1=Cherokee
Z1=Grand Cherokee
KDX=Vehicles

AR = Use as Required - = Non Illustrated Part P.A.R. = Paint as Required

« RETURN TO GROUP INDEX

PANELS, INTERIOR TRIM, REAR CHEROKEE 2 DOOR
Figure IXJ-215

IXJ-215

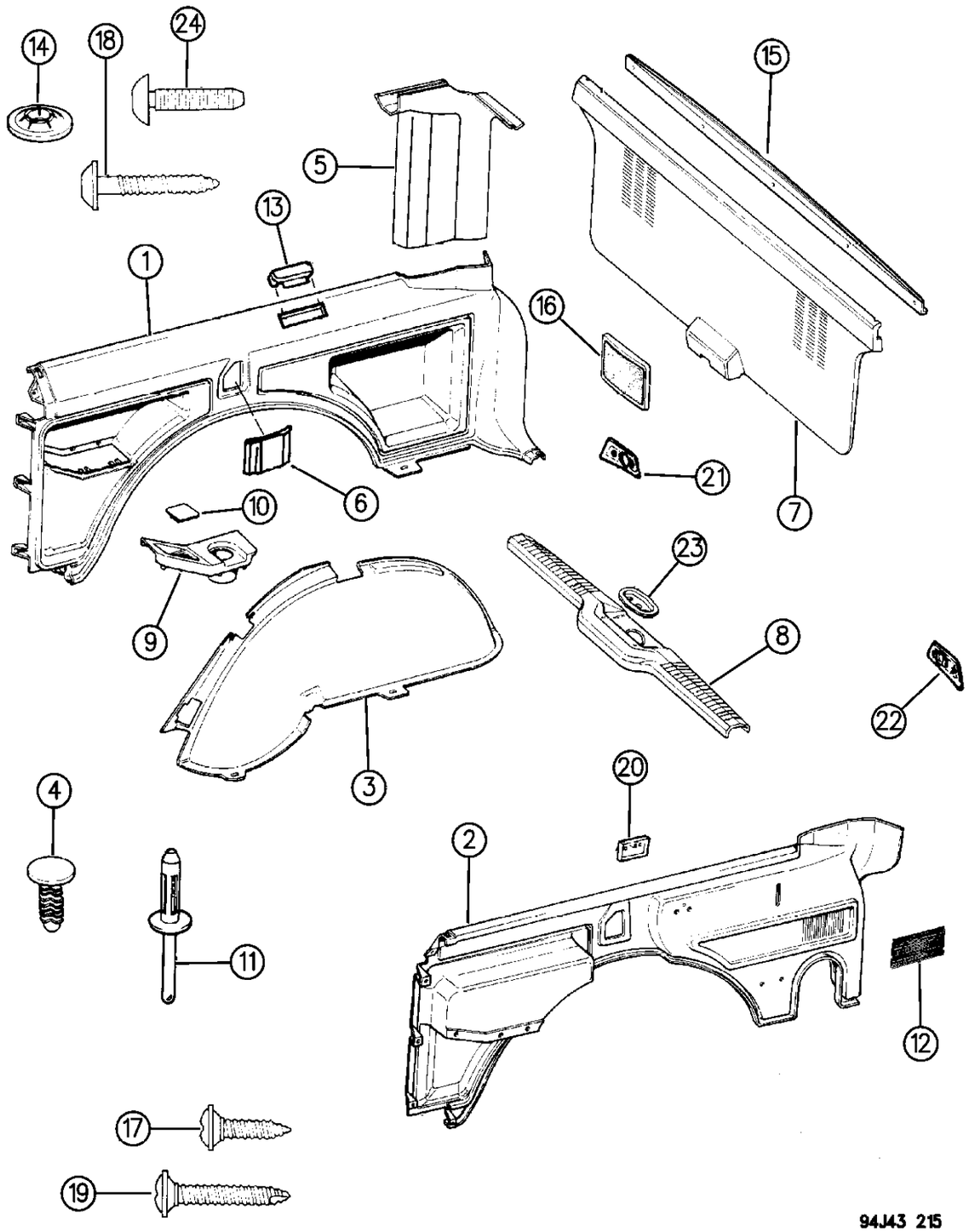

ITEM	PART NUMBER	QTY	BODY	MODEL	DESCRIPTION
1-2					PANEL, Quarter Trim (includes insulation)
	5CT10-1 LS1	1			Charcoal
	5CT10-1 LY6	1			Sand
-	5500 5498	1			INSULATION, Right Quarter Trim Panel, Front Piece
-	5500 5497	1			INSULATION, Right Quarter Trim Panel, Rear Piece
-	5500 5499	1			INSULATION, Left Quarter Trim Panel, Front Piece
-	5500 2687	1			INSULATION, Left Quarter Trim Panel, Rear Piece
-					FASTENER, Quarter Trim Panel, Used w/Outside Mounted Spare Tire
-	5AA3 5JS1	1			Charcoal
-	5AA3 5KY6	1			Dark Sand
3					COVER, Wheelhouse, rubber
	5AC58-9 JS1	1			Charcoal
	5AC58-9 KY6	1			Dark Sand
4	6502 078	11			CLIP-RETAINER, Trim Panel to Liftgate ***
5		1			COVER, Lift Door Pillar, P.A.R.
	5AC78-9 KY6	1			1994
	5EH86-7 RY6	1			1995,96
6	5AZ9 7KS1	2			COVER, Rear Seat Back Striker Opening, EUROPE, Commercial Package
7					PANEL, Lift Door Trim
	5DK1 7MY6	1			Rubber, P.A.R. w/Carpet
	5AE1 9JS1	1			Charcoal
	5AE1 9KY6	1			Dark Sand
8					PLATE, Lift Door Scuff
	5AC5 5JS1	1			Charcoal
	5AC5 5KY6	1			Dark Sand
9					COVER, Armrest, Serviced in Quarter Trim Panel
10					COVER, used w/o Ashtray
	5AC6 4JS1	2			Charcoal
	5AC6 4KY6	2			Dark Sand
11	3420 1621	5			RIVET, Liftgate Trim Retainer
12	5500 4406	1			SCREEN, Louver
13	5BJ1 8KS1	2			BEZEL, Quarter Trim Plug, EUROPE Comercial Package
14	3420 1481	6			NUT, Push (armrest cover to quarter trim panel)
15	5521 5032	1			RETAINER, Liftgate Trim
16					GRILLE, Speaker (used w/premium radio)
	5DB3 0LY6	2			P.A.R.
-	3420 2419	AR			SCREW, 4 Per Speaker Grille
17					SCREW
	3420 1397	2			Quarter Trim Panel Mounting

MODEL CODES:

72=2 DR Wagon
74=4 DR Wagon
77=Open Body 93" Whlbase
78=Open Body 103" Whlbase - Export
T=2WD
J,N=4WD
U=4WD (RHD)

BODY STYLES:

YJ=Wrangler (4X4) "S"
Weangler (4X4) SE
Wrangler (4X4) Sahara
Wrangler (4X4) Renegade
XJ=Cherokee SE
Cherokee Sport
Cherokee Country
ZJ=Grand Cherokee SE
Grand Cherokee Laredo
Grand Cherolee Limited
ZG=Grand Cherokee European
Y1=Wrangler
X1=Cherokee
Z1=Grand Cherokee
KDX=Vehicles

AR = Use as Required - = Non Illustrated Part P.A.R. = Paint as Required

PANELS, INTERIOR TRIM, REAR CHEROKEE 2 DOOR
Figure IXJ-215

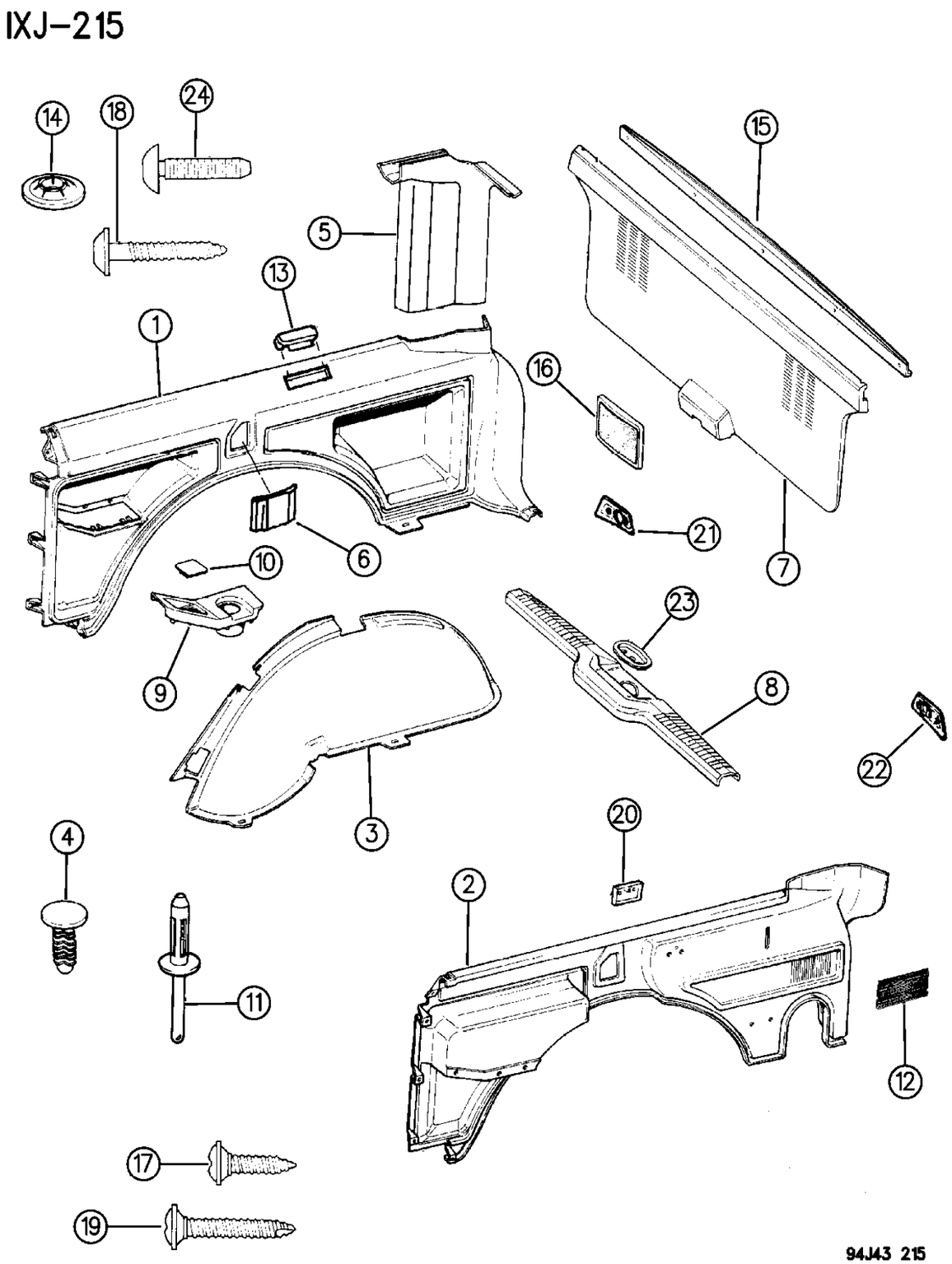

ITEM	PART NUMBER	QTY	BODY	MODEL	DESCRIPTION
	J400 4315	4			Upper Liftgate Pillar Mounting
	3420 1400	2			40mm Long
18	3420 1468	4			SCREW, 25mm Long
19	3420 1398	6			SCREW
20					PAD, Spare Tire Rest
	5AC9 1JS1	1			Charcoal
	5AC9 1KY6	1			Dark Sand
21	5500 5230	1			COVER, Rear Header
22	5501 5080	1			COVER, Rear Header
23	5500 4352	1			RETAINER, Scuff Plate
24	3420 1946	4			SCREW, 19mm Long

MODEL CODES:

72=2 DR Wagon
74=4 DR Wagon
77=Open Body 93" Whlbase
78=Open Body 103" Whlbase - Export
T=2WD
J,N=4WD
U=4WD (RHD)

BODY STYLES:

YJ=Wrangler (4X4) "S"
Weangler (4X4) SE
Wrangler (4X4) Sahara
Wrangler (4X4) Renegade
XJ=Cherokee SE
Cherokee Sport
Cherokee Country
ZJ=Grand Cherokee SE
Grand Cherokee Laredo
Grand Cherolee Limited
ZG=Grand Cherokee European
Y1=Wrangler
X1=Cherokee
Z1=Grand Cherokee
KDX=Vehicles

AR = Use as Required - = Non Illustrated Part P.A.R. = Paint as Required

PANELS, INTERIOR TRIM, FRONT CHEROKEE 4 DOOR
Figure IXJ-220

IXJ–220

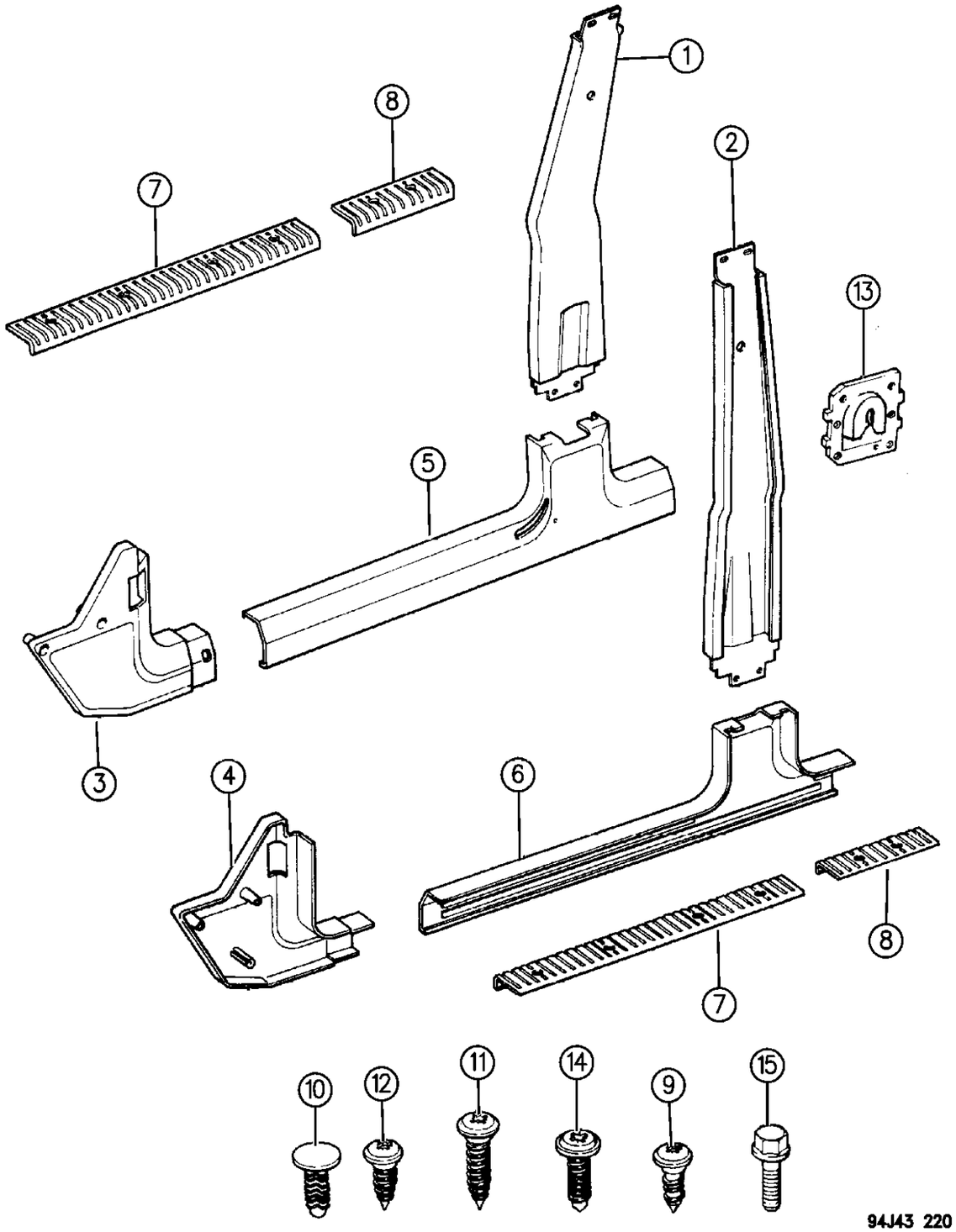

ITEM	PART NUMBER	QTY	BODY	MODEL	DESCRIPTION
1-2					PANEL, Center Trim Upper
					Except EUROPE
					P.A.R.
	5ES3 2RY6	1			Right
	5ES3 3RY6	1			Left
					EUROPE, Includes Bezel Assembly w/adjust D ring
	5FC00-1 SS1	1			Charcoal, EXPORT
	5FC00-1 SY6	1			Dark Sand, EXPORT
3-4					PANEL, Cowl Trim
	5DT38-9 MY6	1			Left Hand Drive, P.A.R.
					Right Hand Drive
	5CG92-3 LS1	1			Charcoal, Right Hand Drive
	5CG92-3 LY6	1			Dark Sand, Right Hand Drive
5-6					COVER, Center Trim Lower
					1994
	5AC32-3 JS1	1			Charcoal
	5AC32-3 KY6	1			Dark Sand
					1995, Up to 2-5-95
	5DS50-1 RS1	1			Charcoal
	5DS50-1 RY6	1			Sand
					1995,96, After 2-5-95
	5EU70-1 RS1	1			Charcoal
	5EU70-1 RY6	1			Sand
7	5500 3370	2			PLATE, Scuff
8	5500 3372	2			PLATE, Scuff
9	3420 1403	12			SCREW, 13mm Long
10	3420 1545	8			CLIP
11		10			SCREW
	3420 1314				1994, M4.2x1.41x13.00
	6034 863				1995,96, .164-18x1.250
12	3420 1314	4			SCREW, 13mm Long
13	3420 1299	2			CLIP
14	3420 1468	4			SCREW, 25mm Long
15					SCREW
	1150 3059	4			20mm Long
	3420 1540	2			30mm Long

MODEL CODES:

72=2 DR Wagon
74=4 DR Wagon
77=Open Body 93" Whlbase
78=Open Body 103" Whlbase - Export
T=2WD
J,N=4WD
U=4WD (RHD)

BODY STYLES:

YJ=Wrangler (4X4) "S"
Weangler (4X4) SE
Wrangler (4X4) Sahara
Wrangler (4X4) Renegade
XJ=Cherokee SE
Cherokee Sport
Cherokee Country
ZJ=Grand Cherokee SE
Grand Cherokee Laredo
Grand Cherolee Limited
ZG=Grand Cherokee European
Y1=Wrangler
X1=Cherokee
Z1=Grand Cherokee
KDX=Vehicles

AR = Use as Required - = Non Illustrated Part P.A.R. = Paint as Required

« RETURN TO GROUP INDEX

PANELS, INTERIOR TRIM, REAR CHEROKEE 4 DOOR
Figure IXJ-225

IXJ-225A

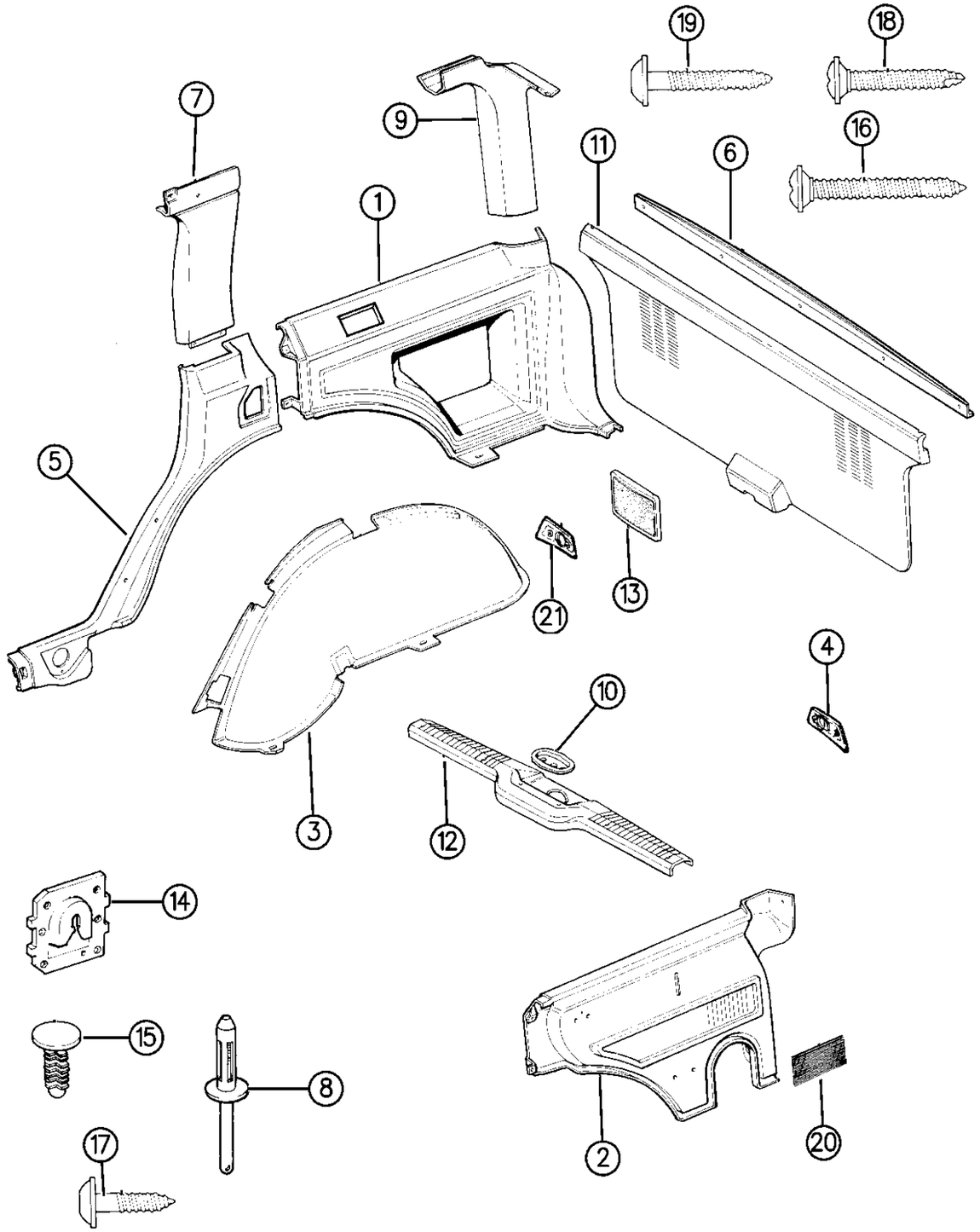

ITEM	PART NUMBER	QTY	BODY	MODEL	DESCRIPTION
1-2					PANEL, Quarter Trim, P.A.R. (includes insulation)
	5AZ90-1 KY6	1			1994, 1995 Up to 11-28-94
	5ES26-7 RY6	1			1995,96, After 11-28-94
-	5500 5497	1			INSULATION, Right Quarter Trim Panel
-	5500 2687	1			INSULATION, Left Quarter Trim Panel
-					FASTENER, Quarter Trim Panel, Used w/Outside Mounted Spare Tire
-	5AA3 5JS1	1			Charcoal
-	5AA3 5KY6	1			Dark Sand
3					COVER, Wheelhouse, Rubber
	5AC58-9 JS1	1			Charcoal
	5AC58-9 KY6	1			Dark Sand
4	5501 5080	1			COVER, Rear Header, Left
5					PANEL, Extension, P.A.R.
	5AC40-1 KY6	1			1994-95, Up to 11-28-94
	5ES28-9 RY6	1			1995,95, After 11-28-94, Up to 12-21-95
	5EW88-9 SY6	1			After 12-21-95
6	5521 5032	1			RETAINER, Liftgate Trim
7					COVER, Lock Pillar, P.A.R.
	5AC74-5 KY6	1			Up to 12-21-95
	5EW86-7 SY6	1			After 12-21-95
8	3420 1621	5			RIVET, Liftgate Trim Retainer
9		1			COVER, Lift Door Pillar, P.A.R.
	5AC80-1 KY6	1			1994
	5EH84-5 RY6	1			1995,96
10	5500 4352	1			RETAINER, Scuff Plate
11					PANEL, Lift Door Trim
	5DK1 7MY6	1			Plastic, P.A.R. w/Carpet
	5AE1 9JS1	1			Charcoal
	5CY1 4LS1	1			Charcoal, KDX - Egypt
	5AE1 9KY6	1			Dark Sand
	5CY1 4LY6	1			Dark Sand, KDX - Egypt
12					PLATE, Lift Door Scuff
	5AC5 5JS1	1			Charcoal
	5AC5 5KY6	1			Dark Sand
13					GRILLE, Liftgate Speaker
	5DB3 0LY6	2			w/Premium Sound, P.A.R.
-	3420 2419	8			SCREW, Speaker Grille, w/Premium Sound
	5AB8 5JY6	2			w/o Premium Sound, P.A.R.
-	J400 0271	8		,	RETAINER, w/o Premium Sound
14	3420 1299	4			RETAINER, Clip

MODEL CODES:

72=2 DR Wagon
74=4 DR Wagon
77=Open Body 93" Whlbase
78=Open Body 103" Whlbase - Export
T=2WD
J,N=4WD
U=4WD (RHD)

BODY STYLES:

YJ=Wrangler (4X4) "S"
Weangler (4X4) SE
Wrangler (4X4) Sahara
Wrangler (4X4) Renegade
XJ=Cherokee SE
Cherokee Sport
Cherokee Country
ZJ=Grand Cherokee SE
Grand Cherokee Laredo
Grand Cherolee Limited
ZG=Grand Cherokee European
Y1=Wrangler
X1=Cherokee
Z1=Grand Cherokee
KDX=Vehicles

AR = Use as Required - = Non Illustrated Part P.A.R. = Paint as Required

PANELS, INTERIOR TRIM, REAR CHEROKEE 4 DOOR
Figure IXJ-225

IXJ-225A

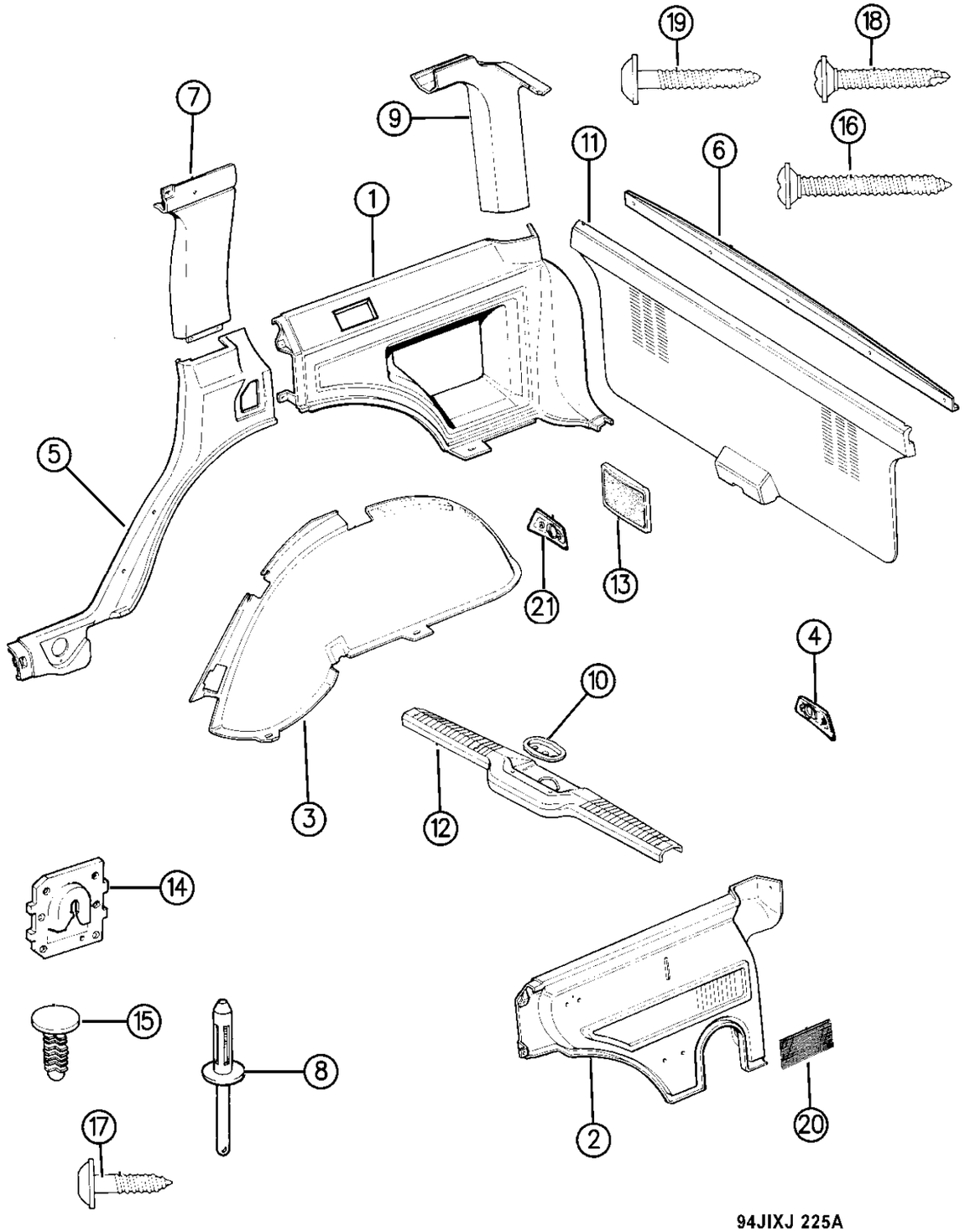

ITEM	PART NUMBER	QTY	BODY	MODEL	DESCRIPTION
15					RETAINER
	3420 1545	AR			Garnish Moulding Attaching
	6502 078	11			Trim Panel To Liftgate
16					SCREW
	3420 1397	4			(13mm) Quarter Trim Panel Mounting
	J400 4315	4			(16mm) Upper Liftgate Pillar Mounting
	3420 1400	AR			40mm
17	3420 1314	8			SCREW, 13mm Long
18	3420 1398	6			SCREW, 25mm Long
19	3420 1468	4			SCREW, 25mm Long
20	5500 4406	1			SCREEN, Louver
	5CP1 4LY6	1			Dark Sand, RHD
21	5500 5230	1			COVER, Rear Header, Right

MODEL CODES:

72=2 DR Wagon
74=4 DR Wagon
77=Open Body 93" Whlbase
78=Open Body 103" Whlbase - Export
T=2WD
J,N=4WD
U=4WD (RHD)

BODY STYLES:

YJ=Wrangler (4X4) "S"
Weangler (4X4) SE
Wrangler (4X4) Sahara
Wrangler (4X4) Renegade

XJ=Cherokee SE
Cherokee Sport
Cherokee Country

ZJ=Grand Cherokee SE
Grand Cherokee Laredo
Grand Cherolee Limited
ZG=Grand Cherokee European

Y1=Wrangler
X1=Cherokee
Z1=Grand Cherokee
KDX=Vehicles

AR = Use as Required - = Non Illustrated Part P.A.R. = Paint as Required

CARPETS AND MATS CHEROKEE
Figure IXJ-310

IXJ-310B

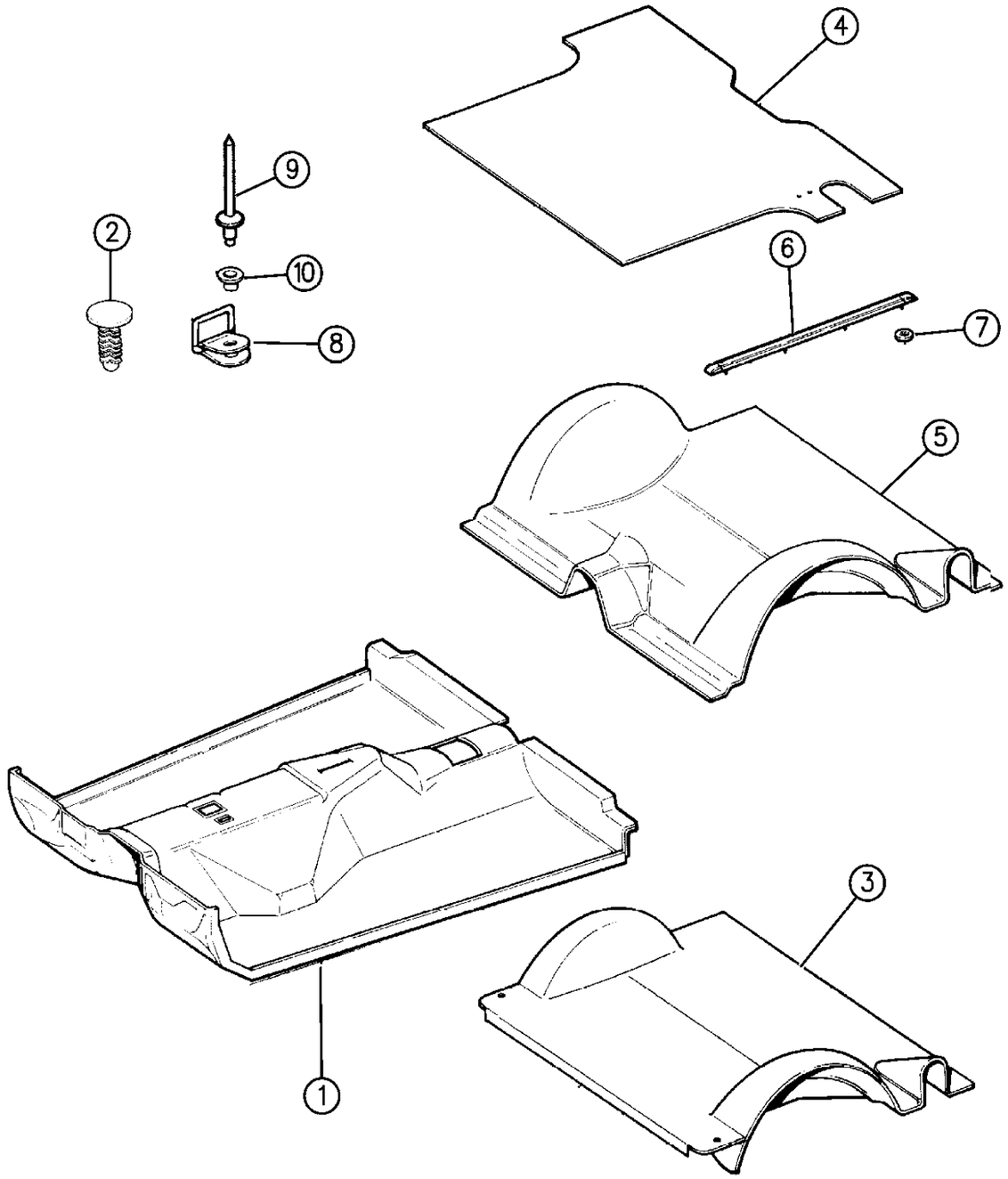

ITEM	PART NUMBER	QTY	BODY	MODEL	DESCRIPTION
1					CARPET, Front Floor
					12 Ounce, Short Pile, Right Hand Drive
					1994
	KR89 PA8	1			Charcoal, RHD
	KR89 PY6	1			Dark Sand, RHD
					1995, Up to 11-28-94
	5DY7 0RA8	1			Charcoal, RHD
	5DY7 0RY6	1			Dark Sand, RHD
					1995, After 11-28-94
	5EY1 9RA8	1			Charcoal, RHD
	5EY1 9RY6	1			Dark Sand, RHD
					1996
	5FK0 9SA8	1			Charcoal, RHD
	5FK0 9SY6	1			Dark Sand, RHD
					12 Ounce, Short Pile, Left Hand Drive
					1994
	KR98 PA8	1			Charcoal
	KR98 PY6	1			Dark Sand
					1995, Up to 11-28-94
	5DT4 9RA8	1			Charcoal
	5DT4 9RY6	1			Dark Sand
					1995, After 11-28-94
	5ER1 0RA8	1			Charcoal
	5ER1 0RY6	1			Dark Sand
					1996
	5FK1 3SA8	1			Charcoal
	5FK1 3SY6	1			Dark Sand
					16 Ounce Long Pile, Right Hand Drive
					1994
	KR97 PA8	1			Charcoal, RHD
	KR97 PY6	1			Dark Sand, RHD
					1995, Up to 11-28-94
	5DY7 1RA8	1			Charcoal, RHD
	5DY7 1RY6	1			Dark Sand, RHD
					1995, After 11-28-94
	5EY2 1RA8	1			Charcoal, RHD
	5EY2 1RY6	1			Dark Sand, RHD
(16oz. Carpet Discontinued for 1996) e Adhesive #312.					
					16 Ounce, Long Pile, Left Hand Drive
					1994
	KR99 PA8	1			Charcoal
	KR99 PY6	1			Dark Sand

MODEL CODES:

72=2 DR Wagon
74=4 DR Wagon
77=Open Body 93" Whlbase
78=Open Body 103" Whlbase - Export
T=2WD
J,N=4WD
U=4WD (RHD)

BODY STYLES:

YJ=Wrangler (4X4) "S"
Weangler (4X4) SE
Wrangler (4X4) Sahara
Wrangler (4X4) Renegade
XJ=Cherokee SE
Cherokee Sport
Cherokee Country
ZJ=Grand Cherokee SE
Grand Cherokee Laredo
Grand Cherolee Limited
ZG=Grand Cherokee European
Y1=Wrangler
X1=Cherokee
Z1=Grand Cherokee
KDX=Vehicles

AR = Use as Required - = Non Illustrated Part P.A.R. = Paint as Required

CARPETS AND MATS CHEROKEE
Figure IXJ-310

IXJ-310B

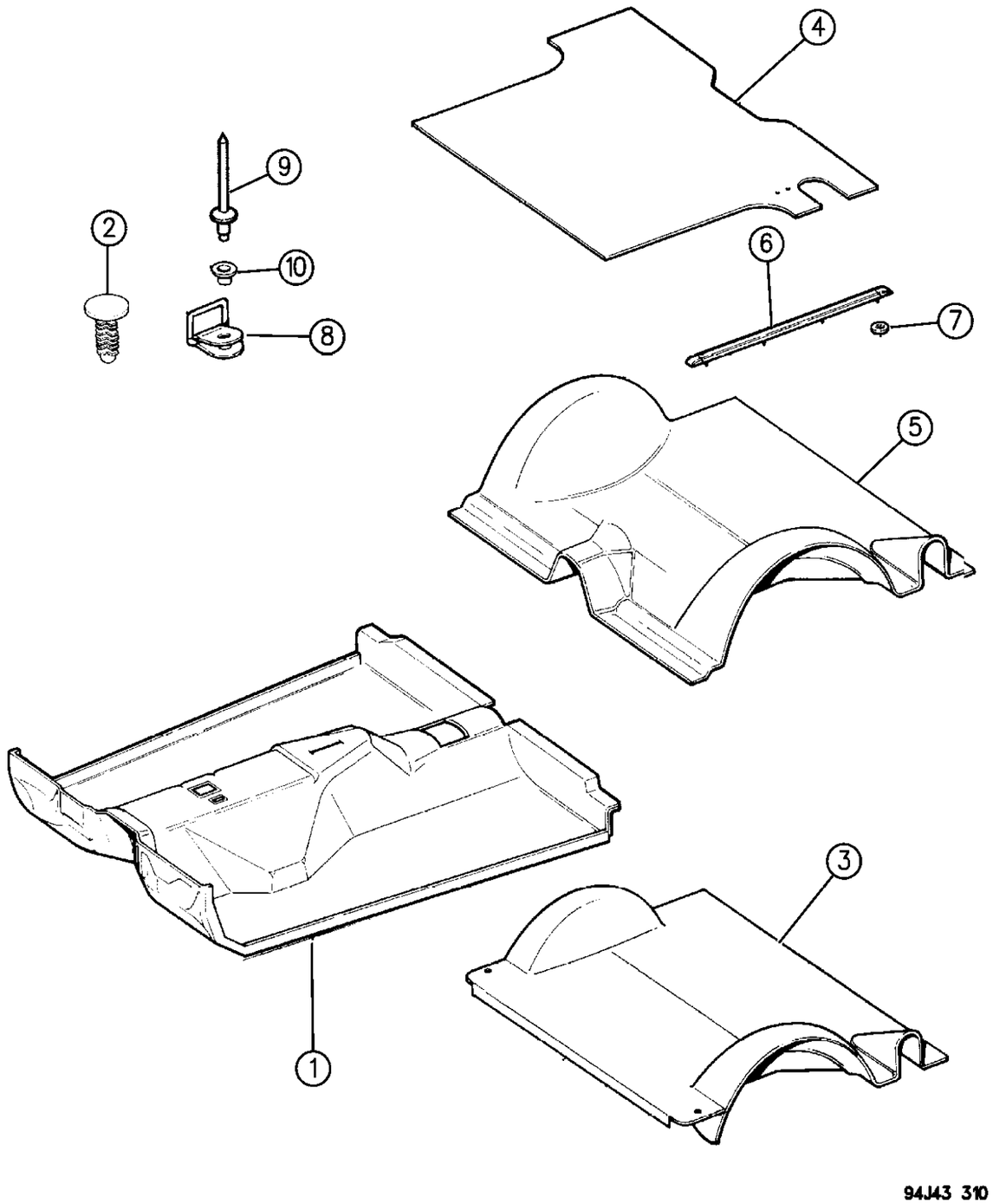

ITEM	PART NUMBER	QTY	BODY	MODEL	DESCRIPTION
					1995, Up to 11-28-94
	5DT5 0RA8	1			Charcoal
	5DT5 0RY6	1			Dark Sand
					1995, After 11-28-94
	5ER1 2RA8	1			Charcoal
	5ER1 2RY6	1			Dark Sand
(16oz. Carpet Discontinued for 1996) e Adhesive #312.					
					MAT, Black Rubber, Heavy Duty
	4762 853	1			1994
	5EL8 2RX9	1			1995,96
	5EL8 3RX9	1			1995,96, R.H.D.
NOTE: FOOT REST for RHD vehicles w/auto trans. (not yet illustrated) consists of the following parts e Adhesive #312.					
-	5511 5066	1			PAD, Footrest, For Right Hand Drive, EUROPE
-	5511 5067	1			BRACKET, Foot Rest Mounting, Right Hand Drive, EUROPE
-		1			SCREW, Pad Mounting, EUROPE (153832 not serviced use .190-16x1.00)
-		1			SCREW, Floor Panel Foot Rest (154235 not serviced)
2	5AA3 5KA8	2		72	FASTENER, Dark Charcoal, w/Commercial Package, EUROPE
3					CARPET, Cargo, EUROPE, Commercial Package
	5DE0 6MA8	1			Charcoal
	5DE0 6MY6	1			Sand
4	5500 8727	1			MAT, Rear Cargo, Black Rubber
5					CARPET, Cargo
					Right and Left Hand Drive
					1994,95, Up to 5-15-95
	5DE0 5MA8	1			Charcoal
	5DE0 5MY6	1			Dark Sand
					1995, After 5-15-95
	5FB5 4RA8	1			Charcoal
	5FB5 4RY6	1			Dark Sand
					1996
	5FK0 2SA8	1			Charcoal
	5FK0 2SY6	1			Dark Sand
NOTE: Carpet must be modified for use w/skid strips. e Adhesive #312.					
6	5500 1078	4			STRIP, Skid ***
7	6035 249	8			NUT, Push
8	5502 5872	2			LOOP, Cargo Tie Down ***
9	3420 2083	2			RIVET
10	3420 2365	2			WASHER
-		1			MAT KIT, R.H.D., (Includes 3 Mats Drivers, Passenger, and Rear.) ***
					1994-95

MODEL CODES:

72=2 DR Wagon
74=4 DR Wagon
77=Open Body 93" Whlbase
78=Open Body 103" Whlbase - Export
T=2WD
J,N=4WD
U=4WD (RHD)

BODY STYLES:

YJ=Wrangler (4X4) "S"
Weangler (4X4) SE
Wrangler (4X4) Sahara
Wrangler (4X4) Renegade
XJ=Cherokee SE
Cherokee Sport
Cherokee Country
ZJ=Grand Cherokee SE
Grand Cherokee Laredo
Grand Cherolee Limited
ZG=Grand Cherokee European
Y1=Wrangler
X1=Cherokee
Z1=Grand Cherokee
KDX=Vehicles

AR = Use as Required - = Non Illustrated Part P.A.R. = Paint as Required

CARPETS AND MATS CHEROKEE
Figure IXJ-310

IXJ-310B

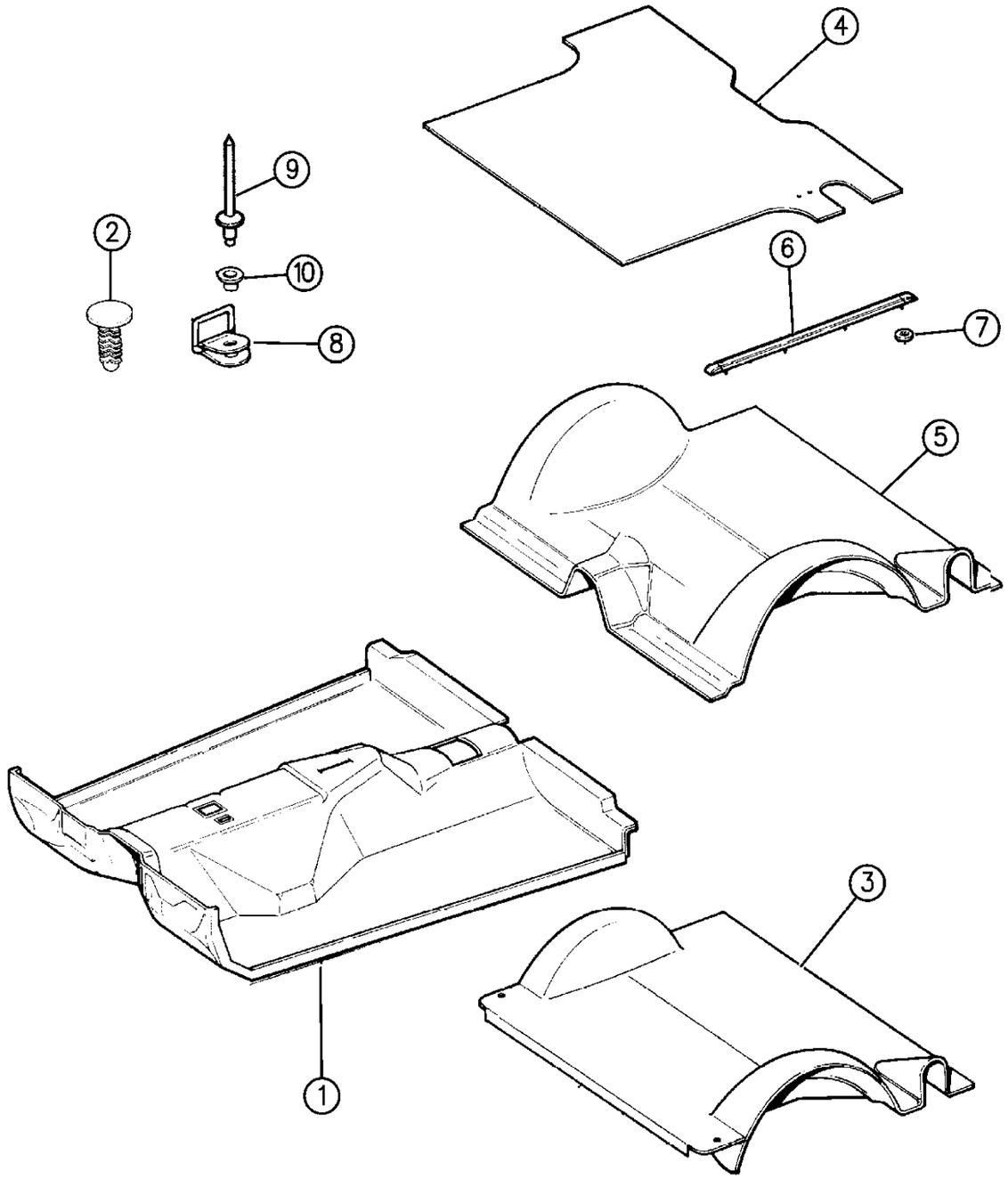

ITEM	PART NUMBER	QTY	BODY	MODEL	DESCRIPTION
	5EM3 7RY6	1			Sand
	5EM3 7RA8	1			Charcoal
					1996
	5FJ3 5SA8	1			Charcoal
	5FJ3 5SY6	1			Dark Sand

Domestic Floor Mats Are Serviced in the Accessories Catalog. e Adhesive #312.

MODEL CODES:

72=2 DR Wagon
74=4 DR Wagon
77=Open Body 93" Whlbase
78=Open Body 103" Whlbase - Export
T=2WD
J,N=4WD
U=4WD (RHD)

BODY STYLES:

YJ=Wrangler (4X4) "S"
Weangler (4X4) SE
Wrangler (4X4) Sahara
Wrangler (4X4) Renegade

XJ=Cherokee SE
Cherokee Sport
Cherokee Country

ZJ=Grand Cherokee SE
Grand Cherokee Laredo
Grand Cherolee Limited
ZG=Grand Cherokee European

Y1=Wrangler
X1=Cherokee
Z1=Grand Cherokee
KDX=Vehicles

AR = Use as Required - = Non Illustrated Part P.A.R. = Paint as Required

INSULATION CHEROKEE
Figure IXJ-320

IXJ–320

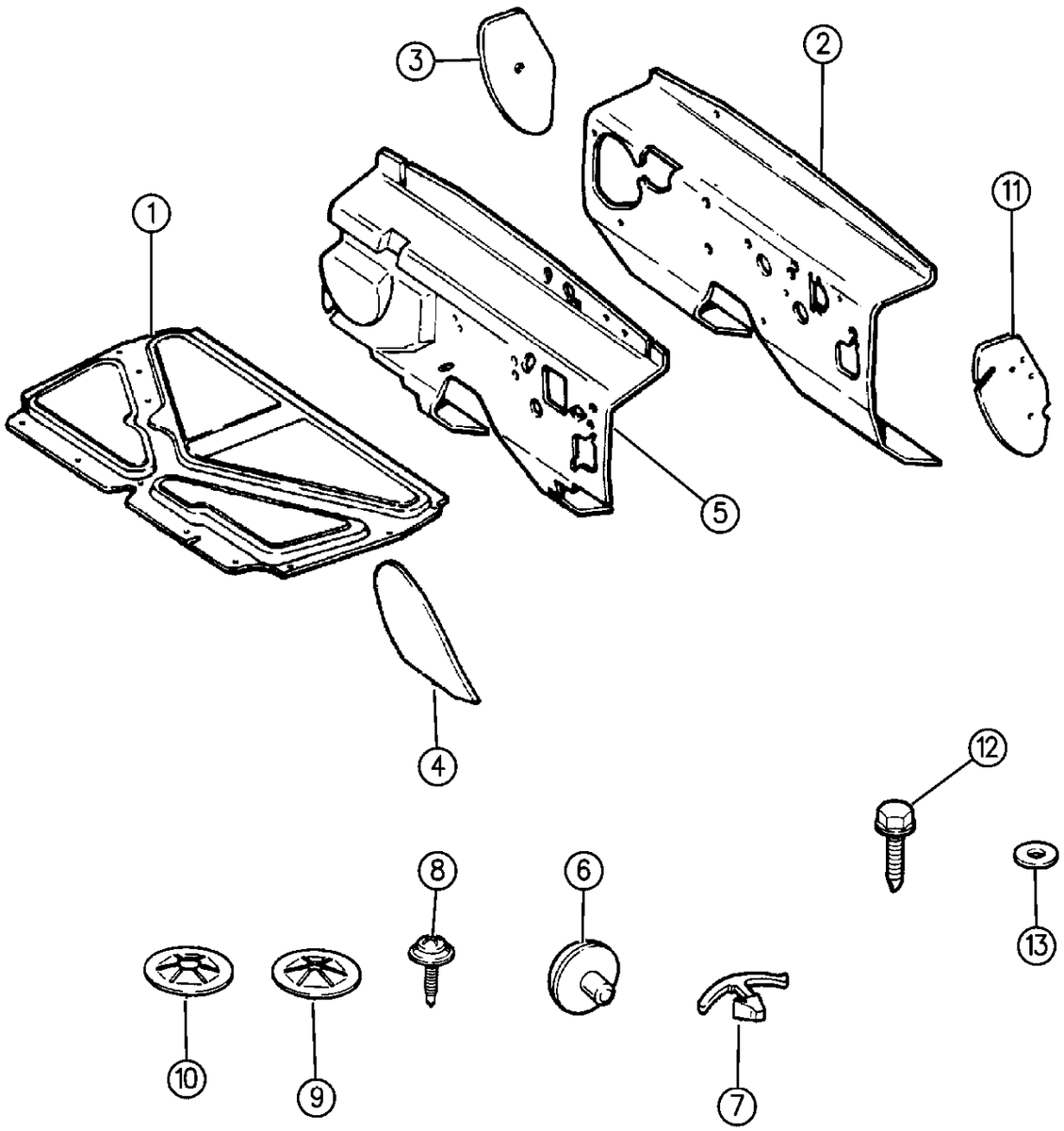

ITEM	PART NUMBER	QTY	BODY	MODEL	DESCRIPTION
1					INSULATION, Hood
	5521 5404	1			1994, 1995 Up to 12-3-94
	5521 7068	1			1995,96, After 12-3-94
2					INSULATION, Dash, Inner
					Left Hand Drive Vehicles
	5521 5309	1			w/Diesel Engine, EUROPE
	5521 5308	1			w/Gas Engine
					Right Hand Drive Vehicles
	5521 5853	1			w/Gas Engine, RHD
3	5521 5240	1			INSULATION, Cowl, Right
4	5500 4230	1			INSULATION, Toe Board
5					INSULATION, Outer Dash, (w/Diesel Engine), EUROPE
	5534 5961	1			L.H.D.
	5521 6016	1			R.H.D.
6	J308 1054	7			CLIP, Insulation to Dash
7	6003 351	13			FASTENER, Hood Silencer
8	6035 156	2			SCREW, Hood Insulation
9	J400 5955	4			NUT, Push, Hood Insulation, Diesel Engine, EUROPE
10	J400 0235	2			NUT, Push, Insulation to Accelerator Stud
11	5521 5240	1			INSULATION, Cowl, Left
12	1150 0101	4			BOLT, Dash Insulation Attaching, w/Diesel Engine, EUROPE
13	1150 0323	4			WASHER, Dash Insulation, w/Diesel Engine, EUROPE

MODEL CODES:

72=2 DR Wagon
74=4 DR Wagon
77=Open Body 93" Whlbase
78=Open Body 103" Whlbase - Export
T=2WD
J,N=4WD
U=4WD (RHD)

BODY STYLES:

YJ=Wrangler (4X4) "S"
Weangler (4X4) SE
Wrangler (4X4) Sahara
Wrangler (4X4) Renegade
XJ=Cherokee SE
Cherokee Sport
Cherokee Country
ZJ=Grand Cherokee SE
Grand Cherokee Laredo
Grand Cherolee Limited
ZG=Grand Cherokee European
Y1=Wrangler
X1=Cherokee
Z1=Grand Cherokee
KDX=Vehicles

AR = Use as Required - = Non Illustrated Part P.A.R. = Paint as Required

COVER, CARGO CHEROKEE
Figure IXJ-330

IXJ–330

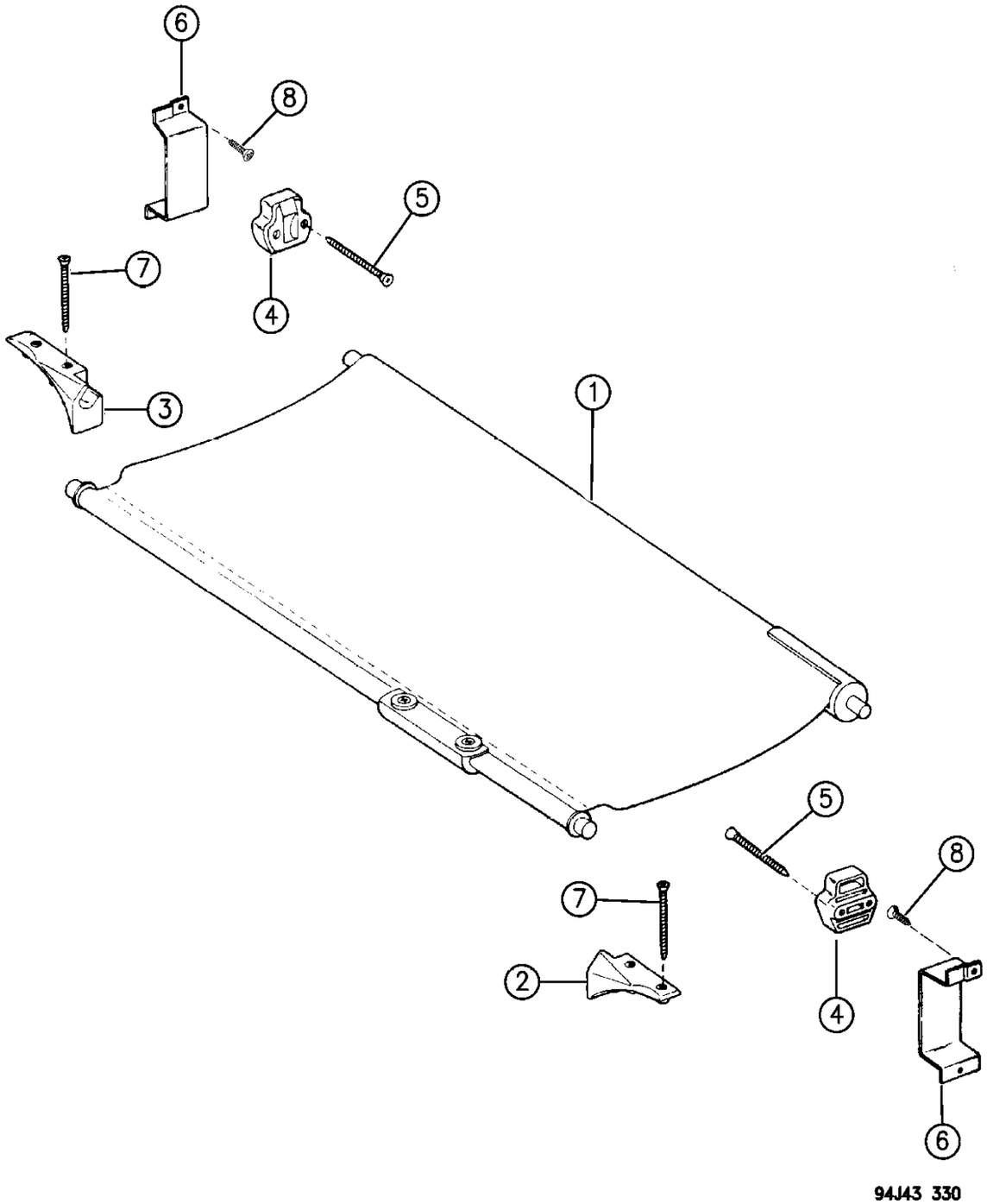

ITEM	PART NUMBER	QTY	BODY	MODEL	DESCRIPTION
1					COVER, Cargo
					w/Inside Mounted Compact Spare Tire
					1994
	5DF8 4LS1	1			Charcoal
	5DF8 4LY6	1			Sand
					1995
	5EL9 4RS1	1			Charcoal
	5EL9 4RY6	1			Sand
					1996
	5FC3 2RS1	1			Charcoal
	5FC3 2RY6	1			Sand
					w/Inside Mounted Conventional Spare Tire
					1994
	5DF8 5LS1	1			Charcoal
	5DF8 5LY6	1			Sand
					1995
	5EL9 5RS1	1			Charcoal
	5EL9 5RY6	1			Sand
					1996
	5FC3 3RS1	1			Charcoal
	5FC3 3RY6	1			Sand
					Right Hand Drive Vehicles w/Conventional Spare Tire
					1994
	5DG6 8MS1	1			Charcoal, RHD
	5DG6 8MY6	1			Dark Sand, RHD
					1995
	5EL9 6RS1	1			Charcoal
	5EL9 6RY6	1			Sand
					1996
	5FC3 4RS1	1			Charcoal
	5FC3 4RY6	1			Sand
					Right Hand Drive Vehicle w/Outside Mounted Spare
					1996, R.H.D.
	5FG9 2RS1	1			Charcoal
	5FG9 2RY6	1			Dark Sand
2					BRACKET, Cargo Cover, Right
	5AF6 2JS1	1			Charcoal
	5AF6 2KY6	1			Dark Sand
3					BRACKET, Cargo Cover, Left
	5AF6 3JS1	1			Charcoal
	5AF6 3KY6	1			Dark Sand
4					BRACKET, Cargo Cover

MODEL CODES:

72=2 DR Wagon
74=4 DR Wagon
77=Open Body 93" Whlbase
78=Open Body 103" Whlbase - Export
T=2WD
J,N=4WD
U=4WD (RHD)

BODY STYLES:

YJ=Wrangler (4X4) "S"
Weangler (4X4) SE
Wrangler (4X4) Sahara
Wrangler (4X4) Renegade
XJ=Cherokee SE
Cherokee Sport
Cherokee Country
ZJ=Grand Cherokee SE
Grand Cherokee Laredo
Grand Cherolee Limited
ZG=Grand Cherokee European
Y1=Wrangler
X1=Cherokee
Z1=Grand Cherokee
KDX=Vehicles

AR = Use as Required - = Non Illustrated Part P.A.R. = Paint as Required

COVER, CARGO CHEROKEE
Figure IXJ-330

IXJ–330

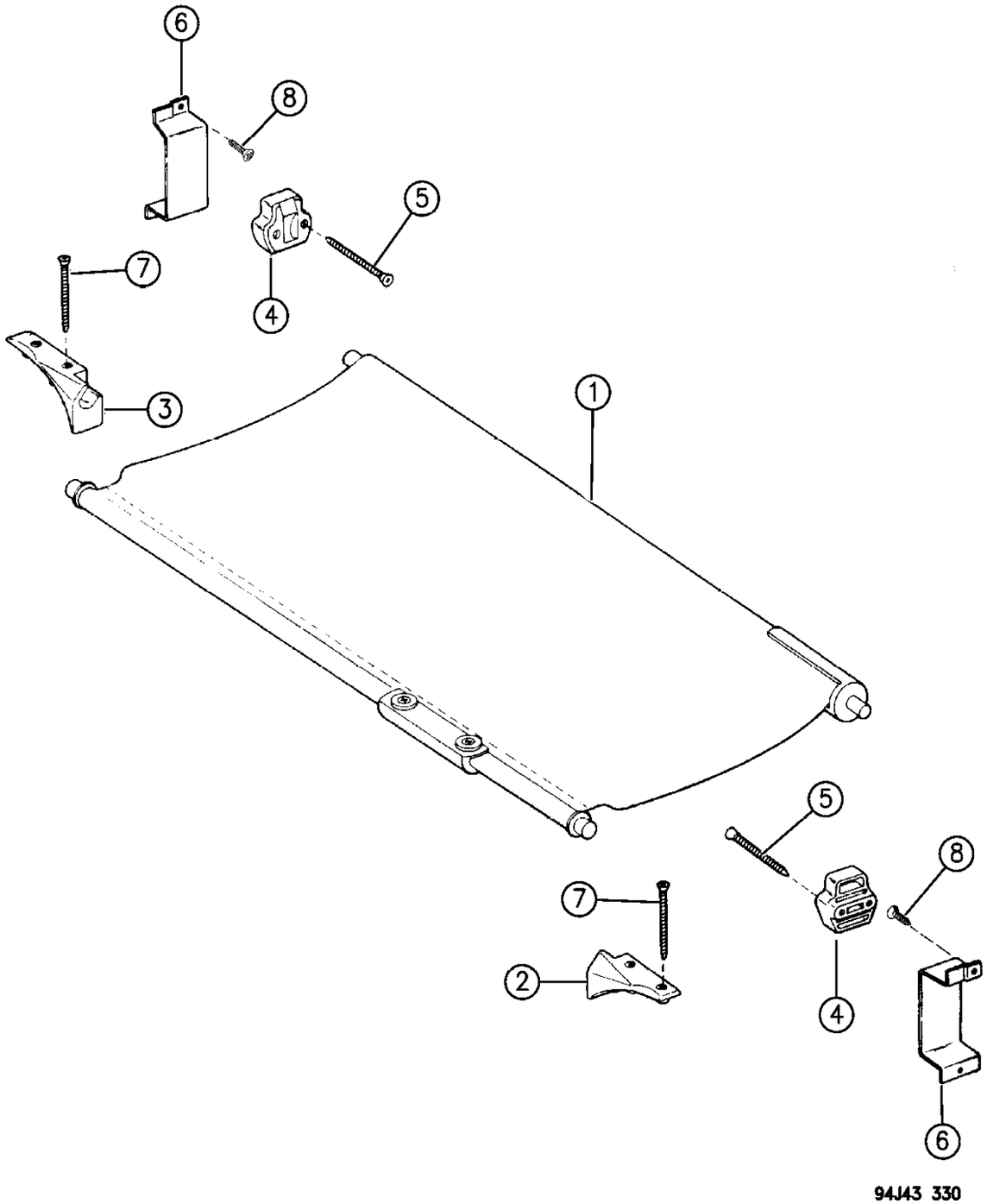

ITEM	PART NUMBER	QTY	BODY	MODEL	DESCRIPTION
	5AF7 1JS1	2			Charcoal
	5AF7 1KY6	2			Dark Sand
5	1150 1614	4			SCREW
6	5502 5592	2			EXTENSION
7	3420 1400	4			SCREW
8	J400 1701	4			SCREW

MODEL CODES:

72=2 DR Wagon
74=4 DR Wagon
77=Open Body 93" Whlbase
78=Open Body 103" Whlbase - Export
T=2WD
J,N=4WD
U=4WD (RHD)

BODY STYLES:

YJ=Wrangler (4X4) "S"
Weangler (4X4) SE
Wrangler (4X4) Sahara
Wrangler (4X4) Renegade
XJ=Cherokee SE
Cherokee Sport
Cherokee Country
ZJ=Grand Cherokee SE
Grand Cherokee Laredo
Grand Cherolee Limited
ZG=Grand Cherokee European
Y1=Wrangler
X1=Cherokee
Z1=Grand Cherokee
KDX=Vehicles

AR = Use as Required - = Non Illustrated Part P.A.R. = Paint as Required

PANELS, DOOR TRIM TYPE 1 (WITH UPPER GARNISH MOULDINGS) CHEROKEE 4 DOOR
Figure IXJ-405

IXJ–405

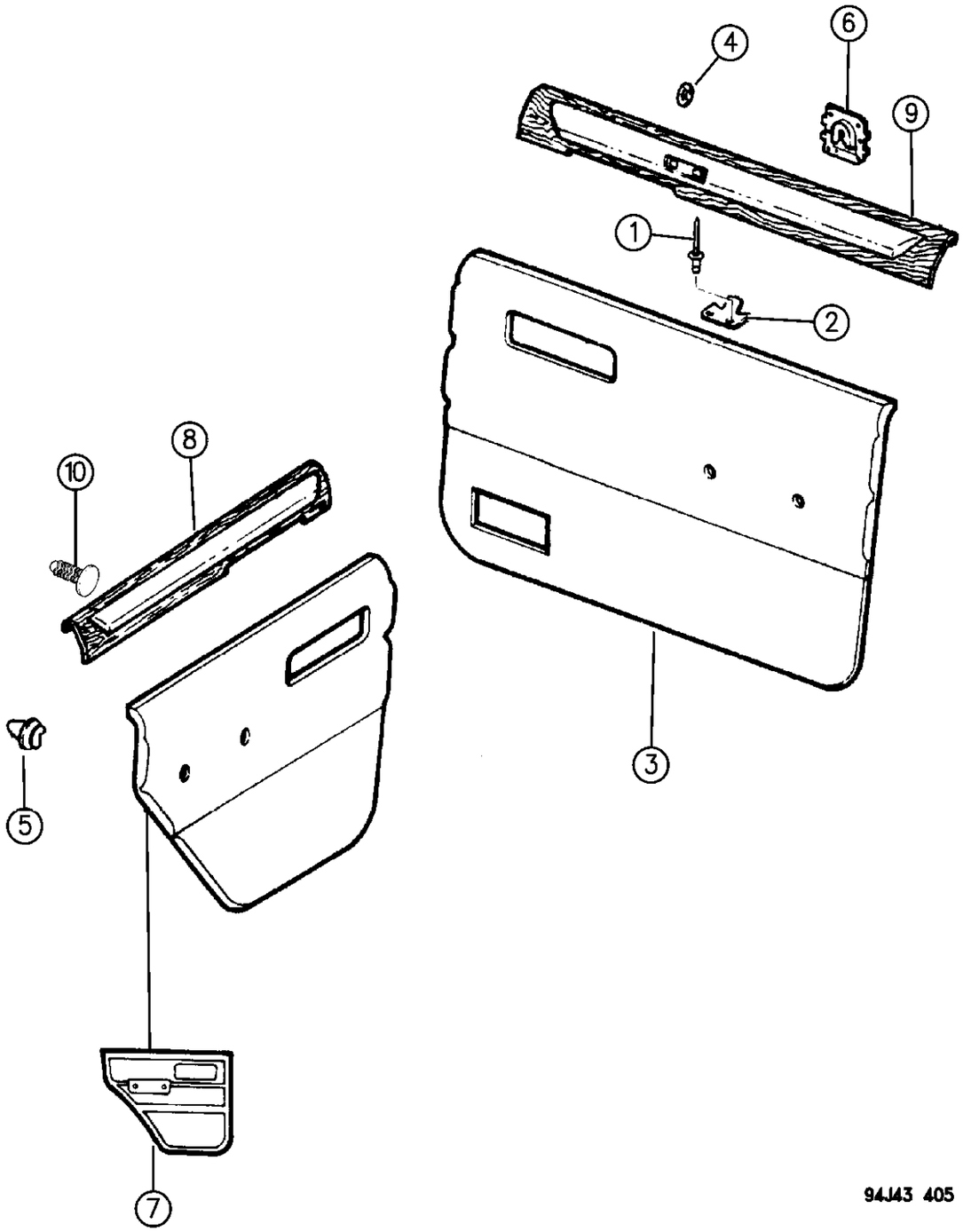

ITEM	PART NUMBER	QTY	BODY	MODEL	DESCRIPTION
1	J400 5899				RIVET, Bracket to Door
2	5500 3629	2			BRACKET, Door Trim
3					PANEL, Front Door Trim
	5DD90-1 MSA	1			Charcoal
	5DD90-1 MY6	1			Sand
4	J400 0459	4			NUT
5	3420 1681	AR			CLIP
6	3420 1299	2			CLIP, Retaining
7					PANEL, Rear Door Trim
	5DD92-3 MSA	1			Charcoal
	5DD92-3 MY6	1			Sand
8					MOULDING, Trim Panel
	5DD70-1 MS1	1			Charcoal
	5DD70-1 MY6	1			Sand
9					MOULDING, Front Trim Panel, Upper Garnish
	5DD66-7 MS1	1			Charcoal
	5DD66-7 MY6	1			Sand
10	3420 1545	10			CLIP

MODEL CODES:

72=2 DR Wagon
74=4 DR Wagon
77=Open Body 93" Whlbase
78=Open Body 103" Whlbase - Export
T=2WD
J,N=4WD
U=4WD (RHD)

BODY STYLES:

YJ=Wrangler (4X4) "S"
Weangler (4X4) SE
Wrangler (4X4) Sahara
Wrangler (4X4) Renegade

XJ=Cherokee SE
Cherokee Sport
Cherokee Country

ZJ=Grand Cherokee SE
Grand Cherokee Laredo
Grand Cherolee Limited
ZG=Grand Cherokee European

Y1=Wrangler
X1=Cherokee
Z1=Grand Cherokee
KDX=Vehicles

AR = Use as Required - = Non Illustrated Part P.A.R. = Paint as Required

« RETURN TO GROUP INDEX

INTERIOR TRIM PARTS, DOOR CHEROKEE
Figure IXJ-410

IXJ-410

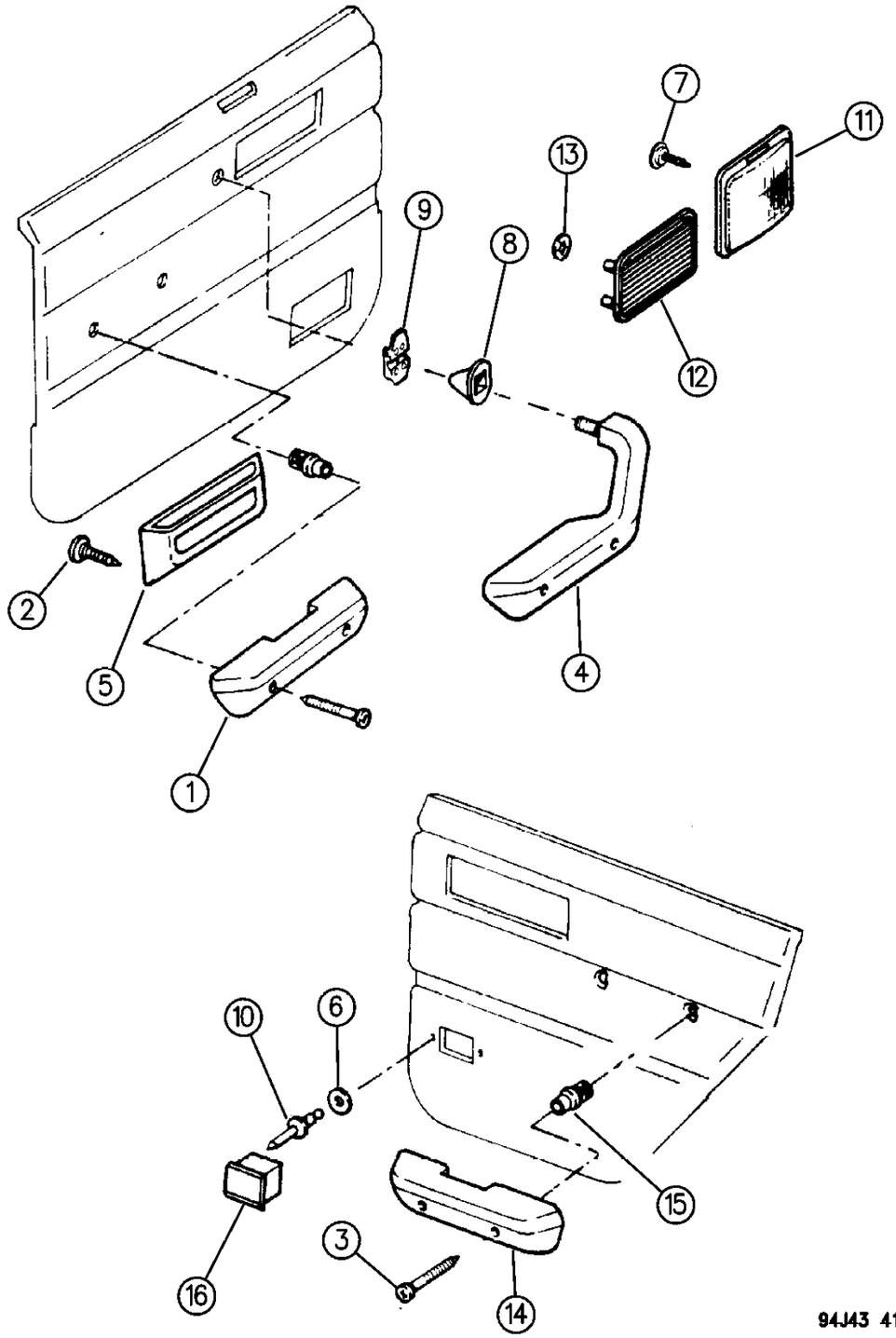

ITEM	PART NUMBER	QTY	BODY	MODEL	DESCRIPTION
1					ARMREST
					Left
	5AW6 9JS1	1			Charcoal
	5AW6 9KY6	1			Dark Sand
					Right
	5AW6 8JS1	1			Charcoal
	5AW6 8KY6	1			Dark Sand
2	3420 2074	10			SCREW, Stowage Bin
3					SCREW
	1150 0068	AR			Armrest Mounting
	3420 1298	AR			Armrest Assembly
4					ARMREST
	5AB98-9 JS1	1			Charcoal
	5AB98-9 JA8	1			Dark Charcoal
	5AB98-9 JY6	1			Dark Sand
5	5AB8 9JY6	2			PANEL, Stowage Bin, P.A.R.
6	1150 0348-9	4			WASHER, 4-Door
7	3420 2419	8			SCREW, Speaker Grille
8	J307 7045	2			NIPPLE, Armrest
9	5521 5152	2			CLIP, Armrest Mounting
10	3420 2602-3	4			RIVET
11	5DB3 0LY6				GRILLE, Door Speaker (w/Premium Radio) (P.A.R.)
12	5AB8 5JY6	2			GRILLE, Speaker/Exhauster, P.A.R. (w/o Premium Radio)
13	J400 0271	8			FASTENER
14					ARMREST, 4 Door
	5AC3 4JS1	2			Charcoal
	5AC3 4JA8	2			Dark Charcoal
	5AC3 4JY6	2			Dark Sand
15					CLIP, Retainer, Armrest Mounting
	6502 112	8			4 Door
	6502 112	4			2 Door
16	5AC3 5JY6	2			ASHTRAY, 4 Door, P.A.R. ***

MODEL CODES:

72=2 DR Wagon
74=4 DR Wagon
77=Open Body 93" Whlbase
78=Open Body 103" Whlbase - Export
T=2WD
J,N=4WD
U=4WD (RHD)

BODY STYLES:

YJ=Wrangler (4X4) "S"
Weangler (4X4) SE
Wrangler (4X4) Sahara
Wrangler (4X4) Renegade
XJ=Cherokee SE
Cherokee Sport
Cherokee Country
ZJ=Grand Cherokee SE
Grand Cherokee Laredo
Grand Cherolee Limited
ZG=Grand Cherokee European
Y1=Wrangler
X1=Cherokee
Z1=Grand Cherokee
KDX=Vehicles

AR = Use as Required - = Non Illustrated Part P.A.R. = Paint as Required

« RETURN TO GROUP INDEX

PANELS, DOOR TRIM CHEROKEE 2 DOOR
Figure IXJ-415

IXJ-415

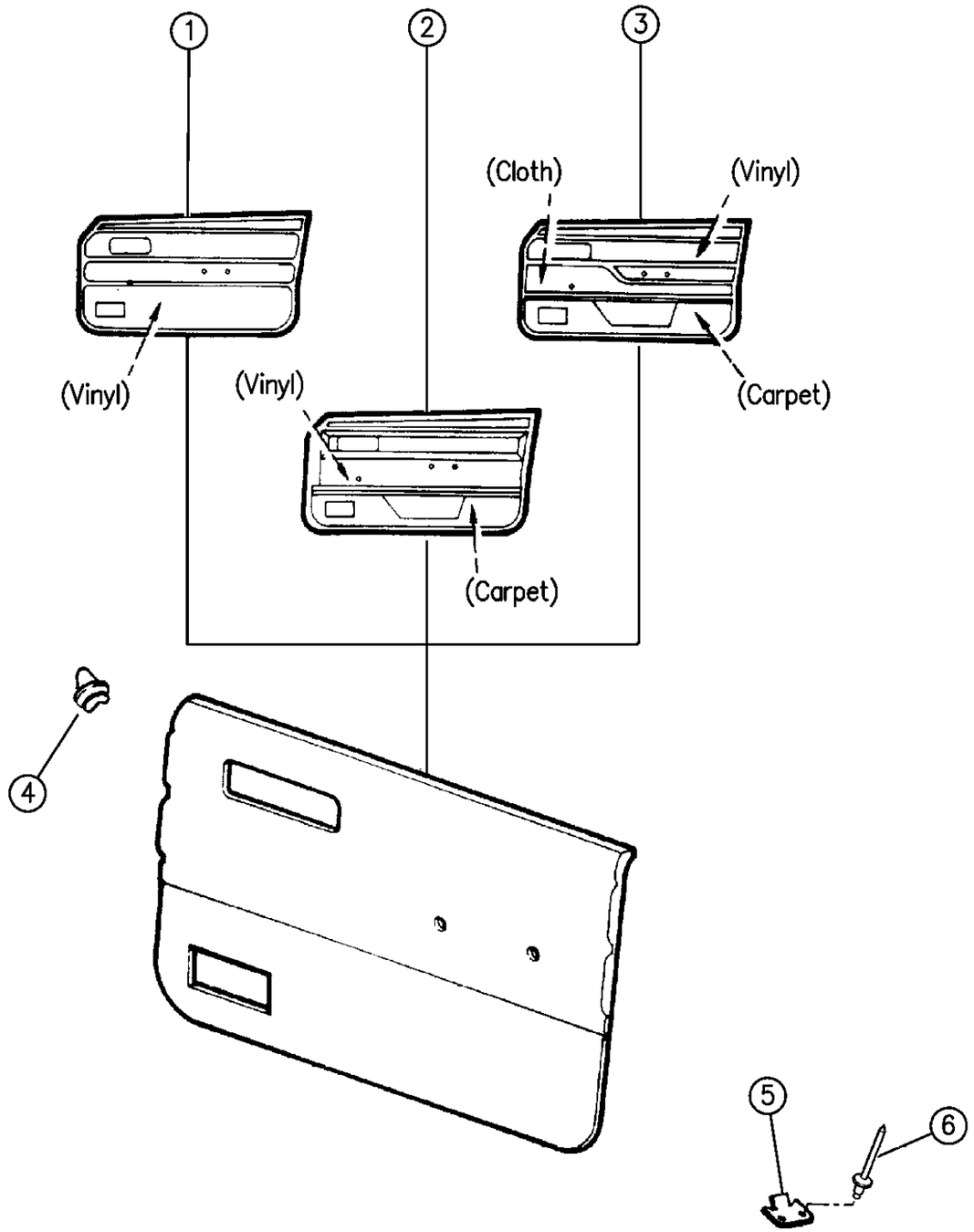

ITEM	PART NUMBER	QTY	BODY	MODEL	DESCRIPTION
1					PANEL, Door Trim
					All Vinyl
					1994,95, Up to 1-16-95
	5AE62-3 JSA	1			Charcoal
	5AE62-3 KY6	1			Sand
					1995,96
	5ER86-7 RSA	1			Charcoal
	5ER86-7 RY6	1			Sand
2					PANEL, Door Trim
					Vinyl and Carpet
					1994,95, Up to 1-16-95
	5AE64-5 JSA	1			Charcoal
	5AE64-5 KY6	1			Sand
					1995,96, After 1-16-95
	5ER92-3 RSA	1			Charcoal
	5ER92-3 RY6	1			Sand
3					PANEL, Door Trim
					Vinyl, Cloth and Carpet
					1994,95, Up to 1-16-95
	5AE72-3 MSA	1			Charcoal
	5AE72-3 KY6	1			Sand
					1995,96, After 1-16-95
	5ER80-1 RSA	1			Charcoal
	5ER80-1 RY6	1			Sand
4	3420 1681	30			CLIP
5	5500 3629	2			BRACKET, Door Trim
6	3420 1197	4			RIVET

MODEL CODES:

72=2 DR Wagon
74=4 DR Wagon
77=Open Body 93" Whlbase
78=Open Body 103" Whlbase - Export
T=2WD
J,N=4WD
U=4WD (RHD)

BODY STYLES:

YJ=Wrangler (4X4) "S"
Weangler (4X4) SE
Wrangler (4X4) Sahara
Wrangler (4X4) Renegade
XJ=Cherokee SE
Cherokee Sport
Cherokee Country
ZJ=Grand Cherokee SE
Grand Cherokee Laredo
Grand Cherolee Limited
ZG=Grand Cherokee European
Y1=Wrangler
X1=Cherokee
Z1=Grand Cherokee
KDX=Vehicles

AR = Use as Required - = Non Illustrated Part P.A.R. = Paint as Required

« RETURN TO GROUP INDEX

PANELS, DOOR TRIM TYPE 2 (WITHOUT UPPER GARNISH MOULDINGS) CHEROKEE 4 DOOR
Figure IXJ-420

IXJ-420

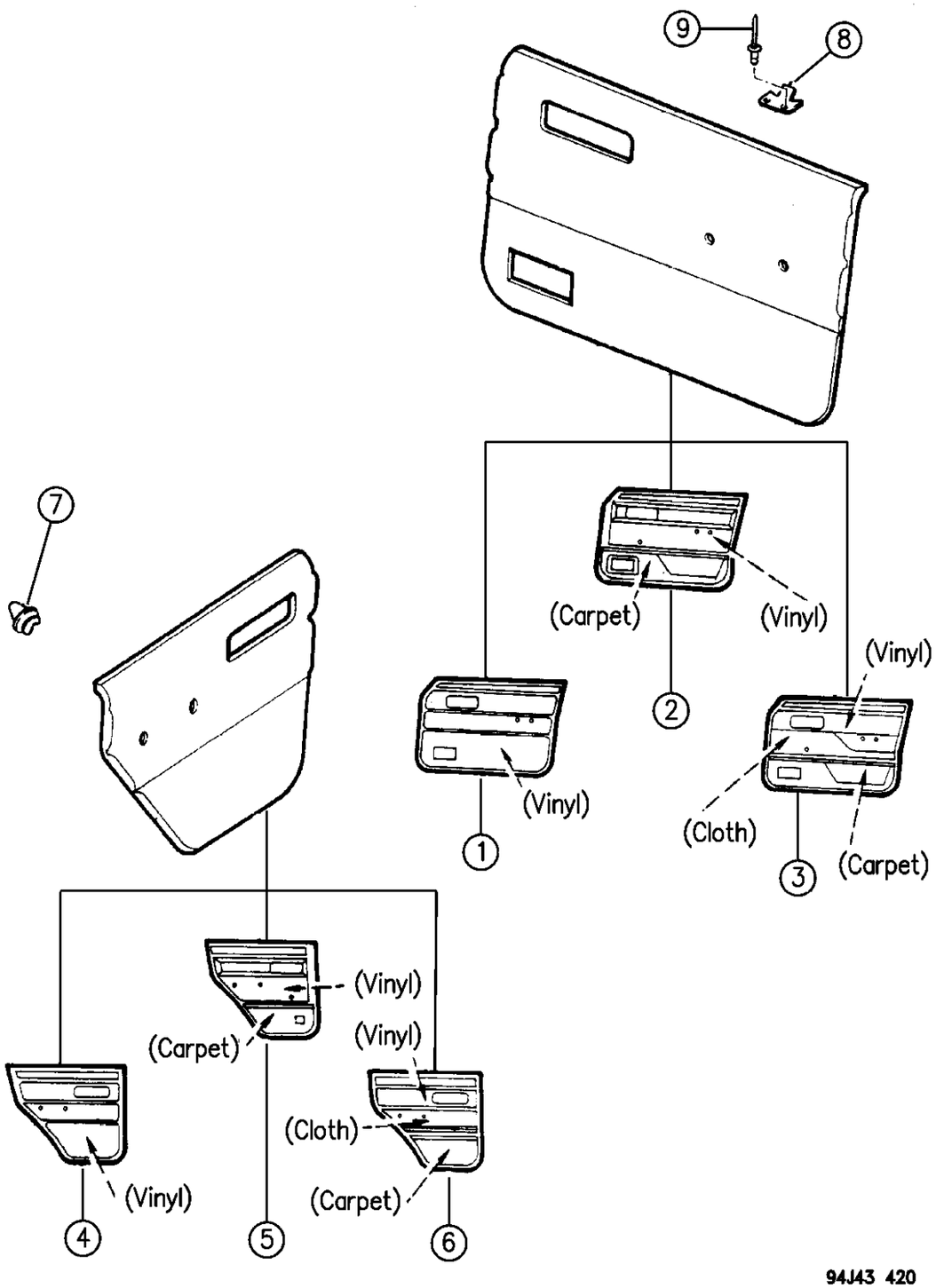

ITEM	PART NUMBER	QTY	BODY	MODEL	DESCRIPTION
1					PANEL, Front Door Trim
					All Vinyl
					1994,95, Up to 1-16-95
	5AE56-7 JSA	1			Charcoal
	5AE56-7 KY6	1			Dark Sand
					1995,96, After 1-16-95
	5ER84-5 RSA	1			Charcoal
	5ER84-5 RY6	1			Sand
					KDX - Egypt
					1994,95
	5CY12-3 LSA	1			Charcoal, KDX - Egypt
	5CY12-3 LY6	1			Dark Sand, KDX - Egypt
					1996
	5EU76-7 RSA	1			Charcoal
	5EU76-7 RY6	1			Sand
2					PANEL, Front Door Trim
					Vinyl and Carpet
					1994,95, Up to 1-16-95
	5AE58-9 JSA	1			Charcoal
	5AE58-9 KY6	1			Dark Sand
					1995,96, After 1-16-95
	5ER88-9 RSA	1			Charcoal
	5ER88-9 RY6	1			Sand
3					PANEL, Front Door Trim
					Vinyl, Cloth and Carpet
					1994,95, Up to 1-16-95
	5AE60-1 MSA	1			Charcoal
	5AE60-1 KY6	1			Dark Sand
					1995,96, After 1-16-95
	5ER82-3 RSA	1			Charcoal
	5ER82-3 RY6	1			Sand
4					PANEL, Rear Door Trim
					All Vinyl
					1994,95, Up to 1-16-95
	5AE68-9 JSA	1			Charcoal
	5AE68-9 KY6	1			Dark Sand
					1995,96, After 1-16-95
	5ER98-9 RSA	1			Charcoal
	5ER98-9 RY6	1			Sand
5					PANEL, Rear Door Trim
					Vinyl and Carpet
					w/o Hole for Ash Receiver

MODEL CODES:

72=2 DR Wagon
74=4 DR Wagon
77=Open Body 93" Whlbase
78=Open Body 103" Whlbase - Export
T=2WD
J,N=4WD
U=4WD (RHD)

BODY STYLES:

YJ=Wrangler (4X4) "S"
Weangler (4X4) SE
Wrangler (4X4) Sahara
Wrangler (4X4) Renegade
XJ=Cherokee SE
Cherokee Sport
Cherokee Country
ZJ=Grand Cherokee SE
Grand Cherokee Laredo
Grand Cherolee Limited
ZG=Grand Cherokee European
Y1=Wrangler
X1=Cherokee
Z1=Grand Cherokee
KDX=Vehicles

AR = Use as Required - = Non Illustrated Part P.A.R. = Paint as Required

PANELS, DOOR TRIM TYPE 2 (WITHOUT UPPER GARNISH MOULDINGS) CHEROKEE 4 DOOR
Figure IXJ-420

IXJ-420

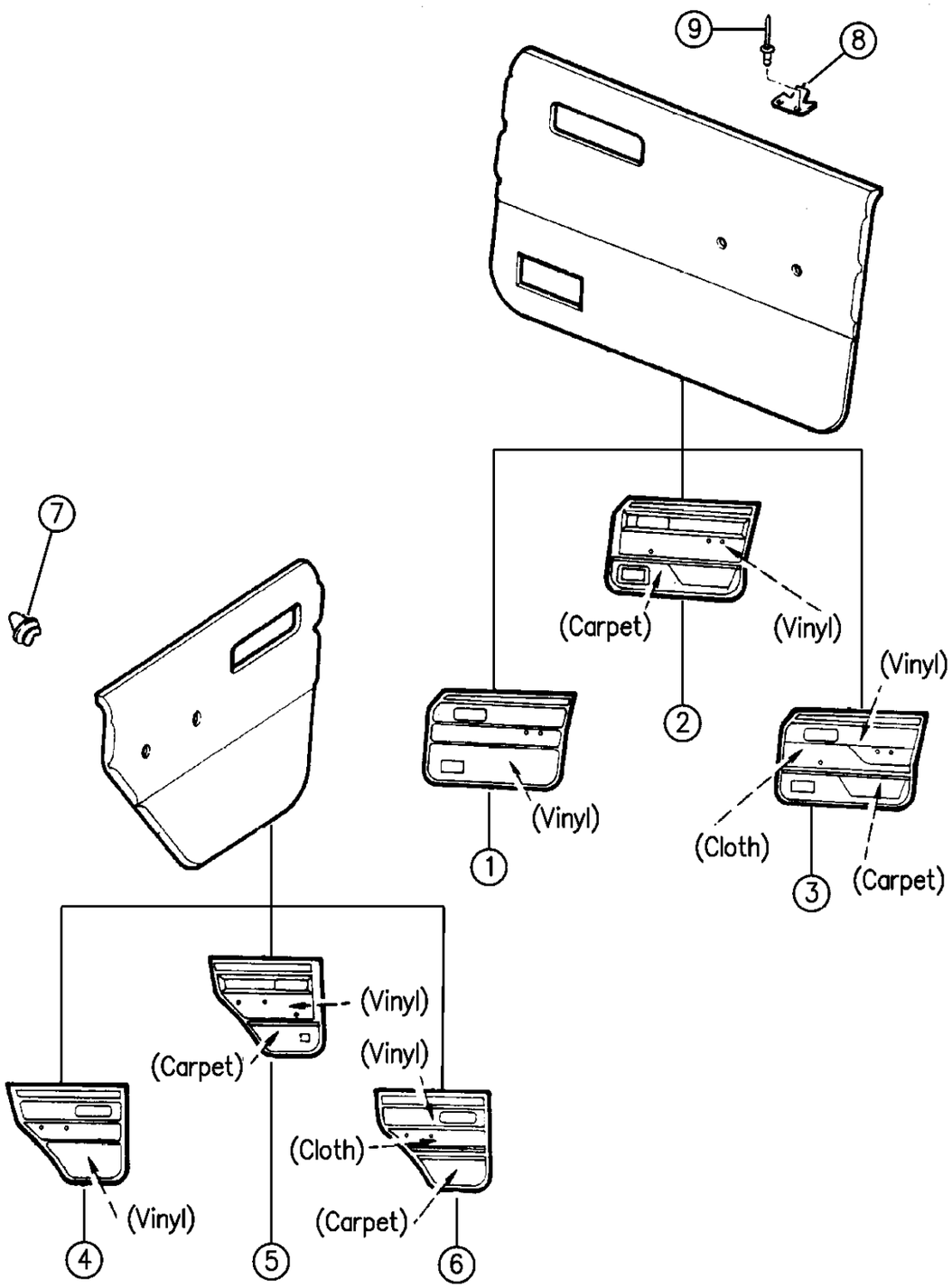

ITEM	PART NUMBER	QTY	BODY	MODEL	DESCRIPTION
					1994,95, Up to 1-16-95
	5CP50-1 KSA	1			Charcoal
	5CP50-1 KY6	1			Dark Sand
					1995,96, After 1-16-95
	5ER94-5 RSA	1			Charcoal
	5ER94-5 RY6	1			Sand
6					PANEL, Rear Door Trim
					Vinyl, Cloth and Carpet
					1994,95, Up to 1-16-95
	5AE66-7 MSA	1			Charcoal
	5AE66-7 KY6	1			Dark Sand
					1995,96, After 1-16-95
	5ER96-7 RSA	1			Charcoal
	5ER96-7 RY6	1			Sand
7	3420 1681	26			CLIP
8	5500 3629	2			BRACKET, Door Trim
9	J400 5899	4			RIVET, Bracket to Door

MODEL CODES:

72=2 DR Wagon
74=4 DR Wagon
77=Open Body 93" Whlbase
78=Open Body 103" Whlbase - Export
T=2WD
J,N=4WD
U=4WD (RHD)

BODY STYLES:

YJ=Wrangler (4X4) "S"
Weangler (4X4) SE
Wrangler (4X4) Sahara
Wrangler (4X4) Renegade
XJ=Cherokee SE
Cherokee Sport
Cherokee Country
ZJ=Grand Cherokee SE
Grand Cherokee Laredo
Grand Cherolee Limited
ZG=Grand Cherokee European
Y1=Wrangler
X1=Cherokee
Z1=Grand Cherokee
KDX=Vehicles

AR = Use as Required - = Non Illustrated Part P.A.R. = Paint as Required

FRAME AND PAD - 1994 BUCKET SEATS CHEROKEE 2 DOOR
Figure IXJ-505

IXJ–505A

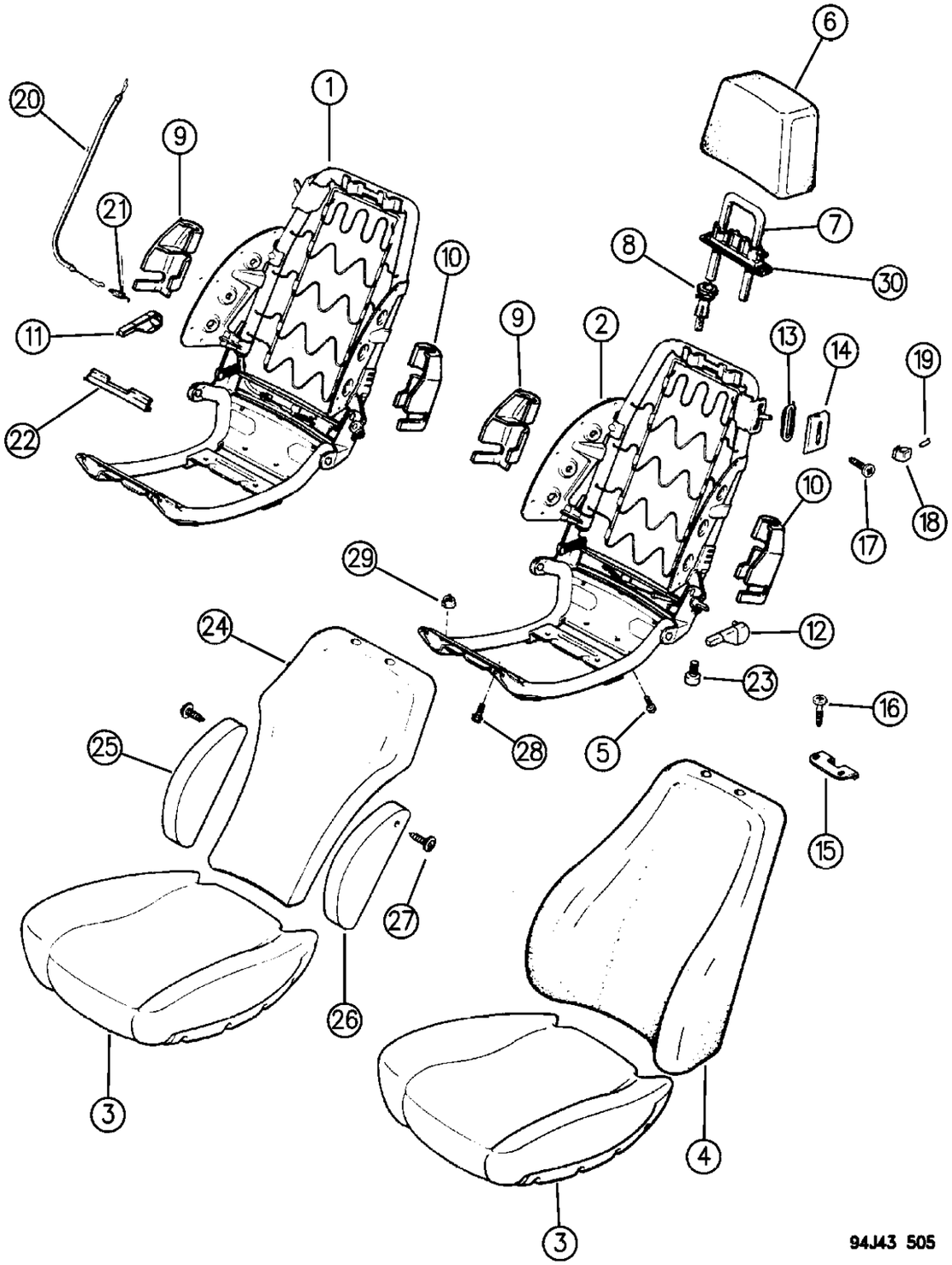

ITEM	PART NUMBER	QTY	BODY	MODEL	DESCRIPTION
In 1995 all frames for seat cushions and backs are serviced with seat cushion or seat back, see Ill.#530. e Adhesive #312.					
1-2					FRAME, Seat
	5502 6296-7	1			w/o Reclining Seat Back
	5519 5022-3	1			w/o Reclining Seat Back, EUROPE - Austria
	5519 4888-9	1			w/Reclining Seat Back
	5519 5024-5	1			w/Reclining Seat Back, EUROPE - Austria
	5519 5348-9	1			w/Reclining Seat Back and Heavy Duty Police Package
3	3500 0762	2			PAD, Cushion
4	3500 2769	2			PAD, Back
5	1150 4735	4			BOLT
6	3500 1690	2			PAD, Headrest
7	3500 3669	2			POST, Headrest ***
-	J400 2461	4			SCREW, for headrest post assembly
8	3500 9926	4			CYLINDER, Headrest
9	3500 4712	2			COVER, Bracket
10	3500 4713	2			COVER, Bracket
11	3500 3686	1			HANDLE, Recliner, Right Seat, Outboard
12	3500 2930	1			HANDLE, Recliner, Left Seat, Outboard
13	3500 6735	2			GASKET, Lever
14	5AB8 8JY6	2			BEZEL, Back Lever, P.A.R.
15	3500 3105	2			BEZEL, Lock
16	3420 1487	4			SCREW
17	3420 1466	4			SCREW
18					KNOB, Seat Latch
	5AC6 8JS1	2			Charcoal
	5AC6 8JA8	2			Dark Charcoal
	5AC6 8JY6	2			Dark Sand
19	J045 5735	2			PIN, Spring
20	3500 6068	2			CABLE, Seat Release
21	3500 6069	2			SPRING, Return
22	3500 6526	2			COVER, Latch
23	4778 342	4			BUMPER PACKAGE, Stop
24	3500 5470	2			PAD, Back
25	3501 1228	2			PAD, Side Wing
26	3501 1229	2			PAD, Side Wing
27	3420 1314	4			SCREW
28	3420 1888	8			SCREW
29	3420 1658	4			NUT
30	3500 4706	2			CAP, Headrest Lower

MODEL CODES:

72=2 DR Wagon
74=4 DR Wagon
77=Open Body 93" Whlbase
78=Open Body 103" Whlbase - Export
T=2WD
J,N=4WD
U=4WD (RHD)

BODY STYLES:

YJ=Wrangler (4X4) "S"
Weangler (4X4) SE
Wrangler (4X4) Sahara
Wrangler (4X4) Renegade
XJ=Cherokee SE
Cherokee Sport
Cherokee Country
ZJ=Grand Cherokee SE
Grand Cherokee Laredo
Grand Cherolee Limited
ZG=Grand Cherokee European
Y1=Wrangler
X1=Cherokee
Z1=Grand Cherokee
KDX=Vehicles

AR = Use as Required - = Non Illustrated Part P.A.R. = Paint as Required

« RETURN TO GROUP INDEX

FRAME AND PAD- 1994 BUCKET SEATS CHEROKEE 4 DOOR
Figure IXJ-510

IXJ-510A

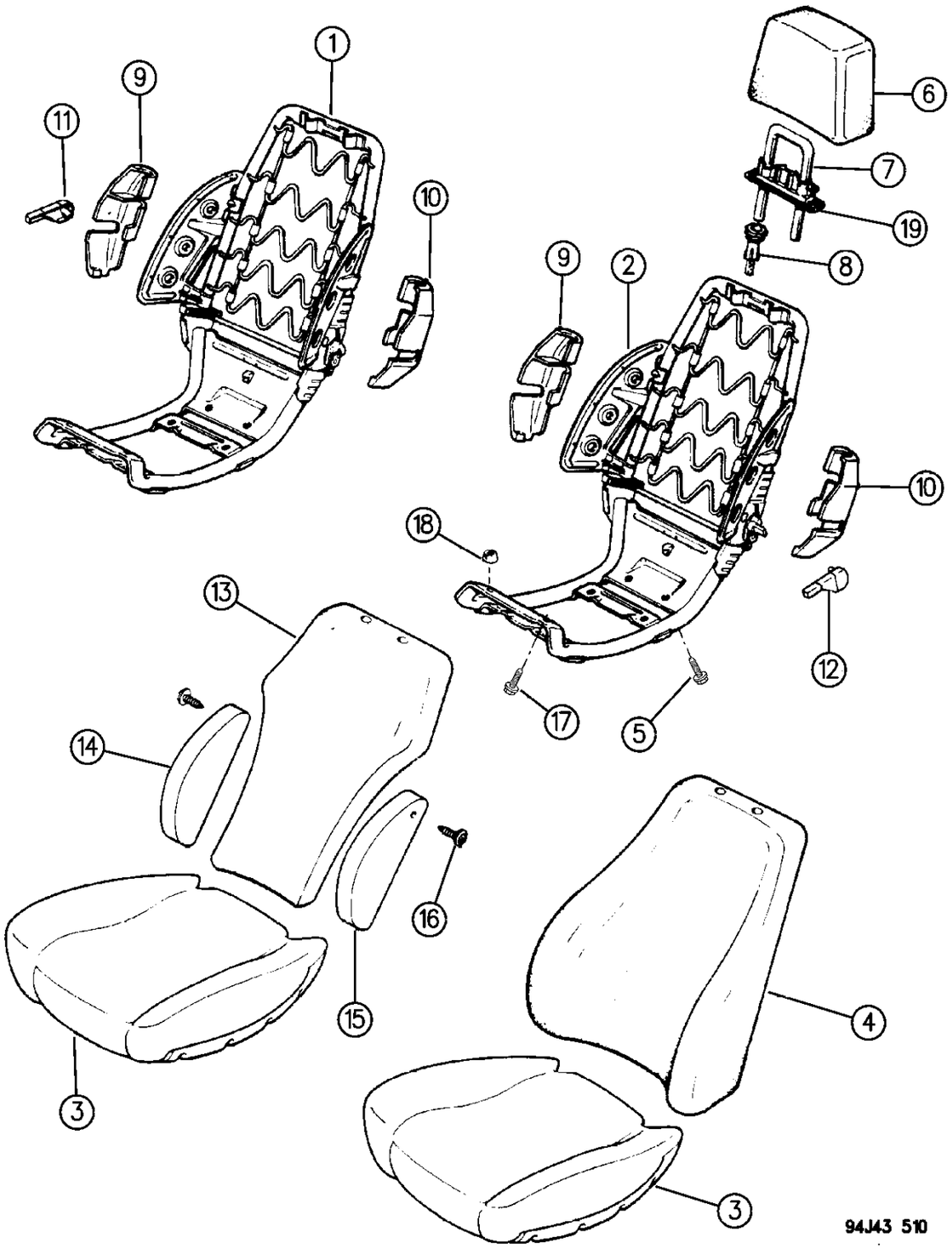

ITEM	PART NUMBER	QTY	BODY	MODEL	DESCRIPTION
In 1995 all frames for seat cushions and seat backs are serviced with seat cushion or seat back, see Ill.#530. e Adhesive #312.					
1					FRAME, Seat, Right
	5502 8904	1			w/o Reclining Seat Back
	5519 5020	1			w/o Reclining Seat Back, EUROPE - Austria
	5519 4880	1			w/Reclining Seat Back
	5519 5018	1			w/Reclining Seat Back, EUROPE - Austria
	5519 5346	1			w/Reclining Seat Back and Police Package, Heavy Duty
2					FRAME, Seat, Left
	5502 8904	1			w/o Reclining Seat Back
	5519 5021	1			w/o Reclining Seat Back, EUROPE - Austria
	5519 4881	1			w/Reclining Seat Back
	5519 5019	1			w/Reclining Seat Back, EUROPE - Austria
	5519 5347	1			w/Reclining Seat Back and Police Package, Heavy Duty
3	3500 0762	2			PAD ASSEMBLY, Cushion ***
4	3500 2769	2			PAD, Back
5	1150 4735	4			BOLT
6	3500 1690	2			PAD, Headrest
7	3500 3669	2			POST, Headrest
-	J400 2461	4			SCREW, Headrest Post Assembly
-	J067 7882	4			PIN
8	3500 9926	4			CYLINDER, Headrest
9	3500 4710	2			COVER, Bracket
10	3500 4711	2			COVER, Bracket
11	3500 3686	1			HANDLE, Recliner, Right Seat, Outbouard
12	3500 2930	1			HANDLE, Left Seat, Outboard
13	3500 5470	2			PAD, Back
14	3501 1228	2			PAD, Side Wing
15	3501 1229	2			PAD, Side Wing
16	3420 1314	4			SCREW
17	3420 1888	8			SCREW
18	3420 1658	4			NUT
19	3500 4706	2			CAP, Headrest Lower

MODEL CODES:

72=2 DR Wagon
74=4 DR Wagon
77=Open Body 93" Whlbase
78=Open Body 103" Whlbase - Export
T=2WD
J,N=4WD
U=4WD (RHD)

BODY STYLES:

YJ=Wrangler (4X4) "S"
Weangler (4X4) SE
Wrangler (4X4) Sahara
Wrangler (4X4) Renegade
XJ=Cherokee SE
Cherokee Sport
Cherokee Country
ZJ=Grand Cherokee SE
Grand Cherokee Laredo
Grand Cherolee Limited
ZG=Grand Cherokee European
Y1=Wrangler
X1=Cherokee
Z1=Grand Cherokee
KDX=Vehicles

AR = Use as Required - = Non Illustrated Part P.A.R. = Paint as Required

« RETURN TO GROUP INDEX

COVERS, SEAT UPHOLSTERY CHEROKEE, 1994
Figure IXJ-520

IXJ–520

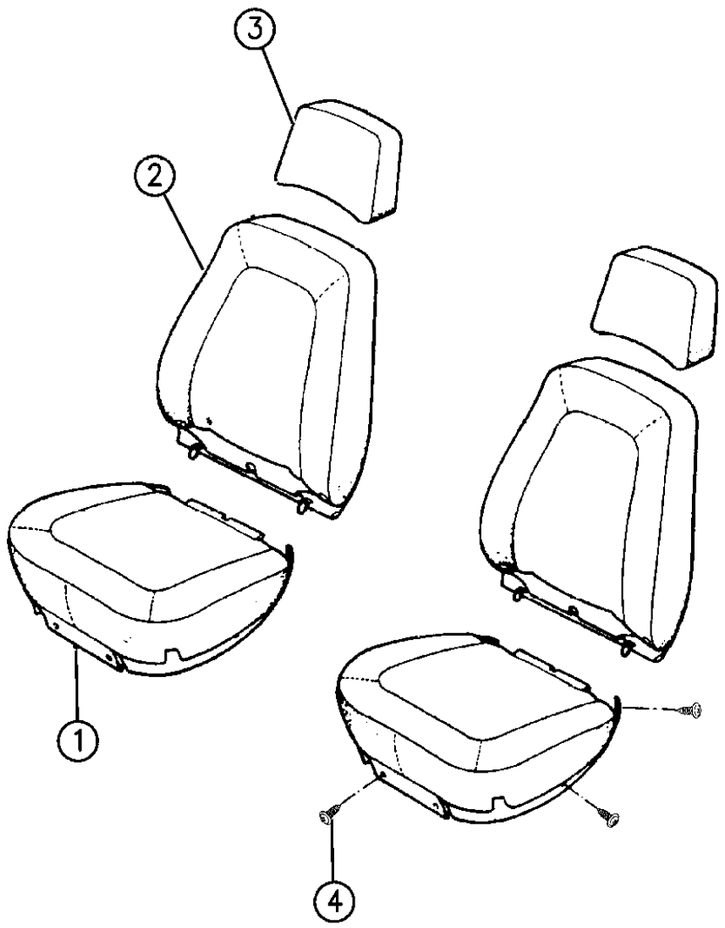

94J43 520

ITEM	PART NUMBER	QTY	BODY	MODEL	DESCRIPTION
1					COVER, Cushion
					LUGGAGE CLOTH
	5DU6 0MSS	2		72	Charcoal, (Q7SA)
	5DU6 0MY6	2		72	Dark Sand, (Q7Y6)
	5DU5 8MSS	2		74	Charcoal, (Q7SA)
	5DU5 8MY6	2		74	Dark Sand, Q7Y6)
					JAMAICA CLOTH
	5DU6 2MA8	2		72	Dark Charcoal, (A7SA)
	5DU6 2MY6	2		72	Dark Sand, (A7Y6)
	5DU5 7MA8	2		74	Dark Charcoal, (A7SA)
	5DU5 7MY6	2		74	Dark Sand, (A7Y6)
					LEATHER
	5DD2 6LXB	2		74	Charcoal, (XLSA)
	5DD2 6LY6	2		74	Dark Sand, (XLY6)
					VINYL
	5DU6 4MS1	2		72	Charcoal, (C8SA,A8SA)
	5DU6 4MY6	2		72	Dark Sand, (C8Y6,A8Y6)
	5DU6 3MS1	2		74	Charcoal, (C8SA,A8SA)
	5DU6 3MY6	2		74	Dark Sand, (C8Y6,A8Y6)
2					COVER, Back
					LUGGAGE CLOTH
	5DU46-7 MSS	1		72	Charcoal, (Q7SA)
	5DU46-7 MY6	1		72	Dark Sand, (Q7Y6)
	5DU1 7MSS	2		74	Charcoal, (Q7SA)
	5DU1 7MY6	2		74	Sand, (Q7Y6)
					JAMAICA CLOTH
	5DU5 1MA8	2		72	Dark Charcoal, (A7SA)
	5DU5 1MY6	2		72	Dark Sand, (A7Y6)
	5DU5 2MA8	2		74	Dark Charcoal, (A7SA)
	5DU5 2MY6	2		74	Dark Sand, (A7Y6)
					LEATHER
	5CC8 0KXB	2		74	Charcoal, (XLSA)
	5CC8 0KY6	2		74	Dark Sand, (XLY6)
					VINYL
	5DU4 9MS1	2		72	Charcoal, (C8SA,A8SA)
	5DU4 9MY6	2		72	Dark Sand, (C8Y6,A8Y6)
	5DU5 0MS1	2		74	Charcoal, (C8SA,A8SA)
	5DU5 0MY6	2		74	Dark Sand, (C8Y6,A8Y6)
-	5519 5548	AR			RING, Seat Back Cover Bottom
3					COVER, Headrest
	5DU5 3MSS	2			Charcoal, (Q7SA)
	5DU5 3MY6	2			Dark Sand, (Q7Y6)

MODEL CODES:

72=2 DR Wagon
74=4 DR Wagon
77=Open Body 93" Whlbase
78=Open Body 103" Whlbase - Export
T=2WD
J,N=4WD
U=4WD (RHD)

BODY STYLES:

YJ=Wrangler (4X4) "S"
Weangler (4X4) SE
Wrangler (4X4) Sahara
Wrangler (4X4) Renegade
XJ=Cherokee SE
Cherokee Sport
Cherokee Country
ZJ=Grand Cherokee SE
Grand Cherokee Laredo
Grand Cherolee Limited
ZG=Grand Cherokee European
Y1=Wrangler
X1=Cherokee
Z1=Grand Cherokee
KDX=Vehicles

AR = Use as Required - = Non Illustrated Part P.A.R. = Paint as Required

COVERS, SEAT UPHOLSTERY CHEROKEE, 1994
Figure IXJ-520

IXJ–520

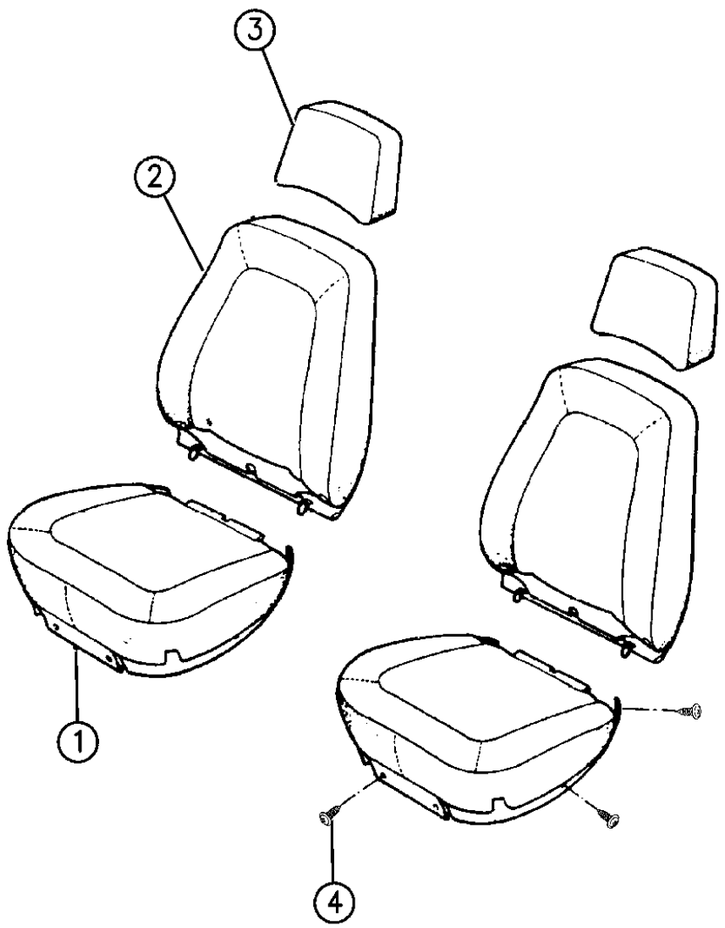

94J43 520

ITEM	PART NUMBER	QTY	BODY	MODEL	DESCRIPTION
	5DU1 5MS1	2			Charcoal, (A7SA,C8SA)
	5DU1 5MY6	2			Dark Sand, (A7Y6,C8Y6)
	5AY9 4JXB	2			Charcoal, (XLSA)
	5AY9 4JY6	2			Dark Sand, (XLY6)
-	3500 2146	2			STIFFENER, Headrest ***
					JAMAICA CLOTH
4	3420 1314	AR			SCREW
NOTE: The following material (roll goods) are available, order by the inch. Example; to receive 20 linier inches of material - order quantity of 20. e Adhesive #312.					
-					BODYCLOTH, Jamaica, 60" Wide
-	R095 KA8	AR			Dark Charcoal, (A7SA)
-	R095 KY6	AR			Dark Sand, (A7Y6)
-					Vinyl, Jayne Grain, 59" Wide ***
-	R610 KS1	AR			Charcoal, (A8SA,C8SA)
-	R610 KY6	AR			Dark Sand, (A8Y6,C8Y6)

MODEL CODES:

72=2 DR Wagon
74=4 DR Wagon
77=Open Body 93" Whlbase
78=Open Body 103" Whlbase - Export
T=2WD
J,N=4WD
U=4WD (RHD)

BODY STYLES:

YJ=Wrangler (4X4) "S"
Weangler (4X4) SE
Wrangler (4X4) Sahara
Wrangler (4X4) Renegade
XJ=Cherokee SE
Cherokee Sport
Cherokee Country
ZJ=Grand Cherokee SE
Grand Cherokee Laredo
Grand Cherolee Limited
ZG=Grand Cherokee European
Y1=Wrangler
X1=Cherokee
Z1=Grand Cherokee
KDX=Vehicles

AR = Use as Required - = Non Illustrated Part P.A.R. = Paint as Required

COVERS, SEAT UPHOLSTERY CHEROKEE, 1995-96
Figure IXJ-530

IXJ-530C

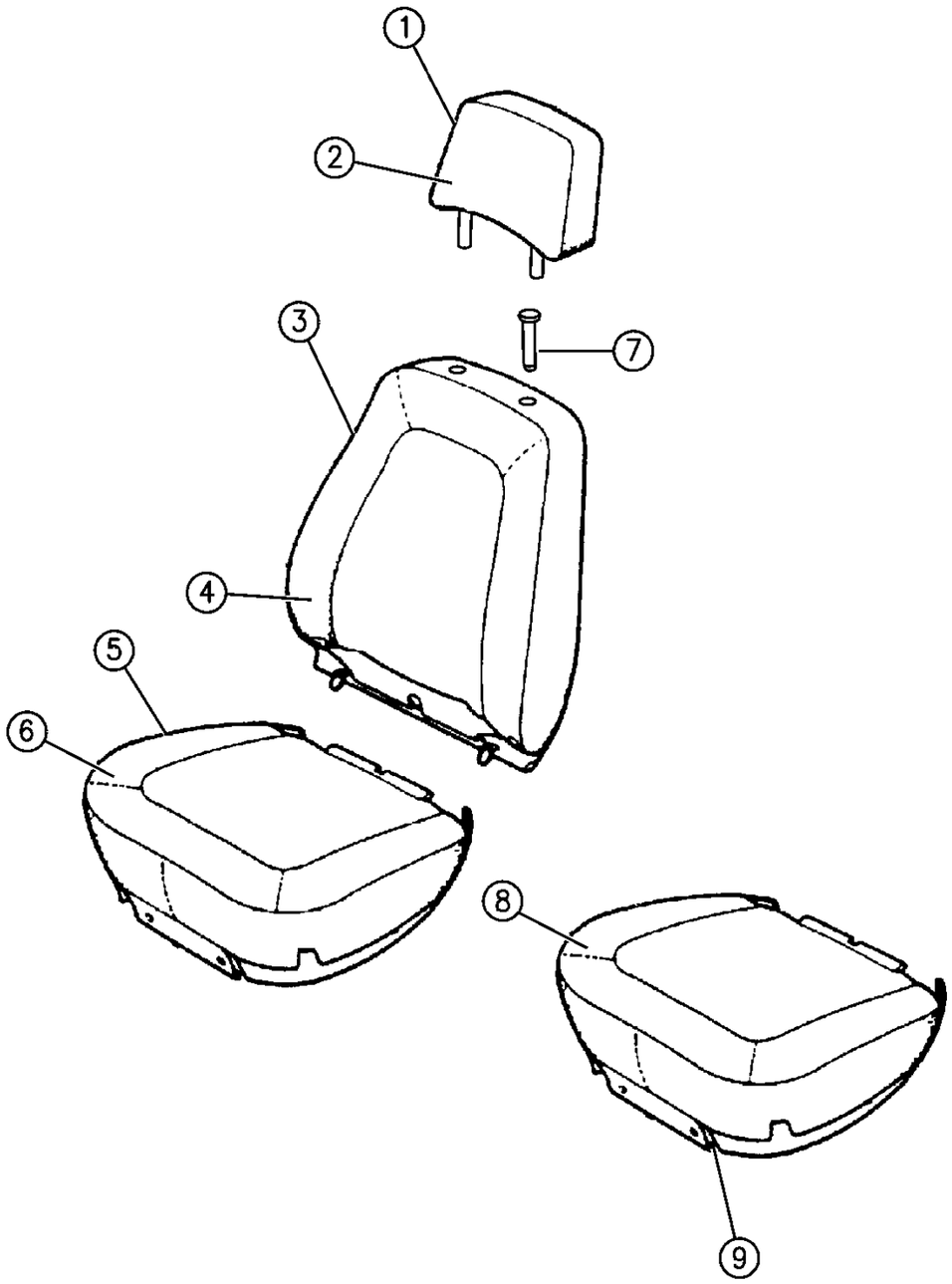

ITEM	PART NUMBER	QTY	BODY	MODEL	DESCRIPTION
1					HEADREST ASSEMBLY ***
					Luggage Cloth
	MP65 RSS	2			Charcoal, (R7SA)
	MP65 RY6	2			Dark Sand, (R7Y6)
					Leather
	MP79 RXB	2		74	Graphite, (BLSA)
	MP79 RY6	2		74	Dark Sand, (BLY6)
2					COVER, Headrest
					Luggage Cloth
	MP78 RSS	2			Charcoal, (R7SA)
	MP78 RY6	2			Dark Sand, (R7Y6)
					Leather
	MP80 RXB	2		74	Graphite, (BLSA)
	MP80 RY6	2		74	Dark Sand, (BLY6)
3					BACK ASSEMBLY, (Includes Frame)
					Jayne Vinyl
					Up to 11-1-95
	MP82-3 RS1	1			Charcoal, (A6SA)
	MP82-3 RY6	1			Dark Sand, (A6Y6)
					After 11-1-95
	QE32-3 SS1	1			Charcoal, (A6SA)
	QE32-3 SY6	1			Dark Sand, (A6Y6)
					Jamaica Cloth
					Up to 11-1-95
	MP88-9 RA8	1			Charcoal, (J5SA, Y5SA)
	MP88-9 RY6	1			Dark Sand, (J5Y6, Y5Y6)
					After 11-1-95
	QE42-3 SA8	1			Charcoal, (J5Sa, Y5SA)
	QE42-3 SY6	1			Dark Sand, (J5Y6, Y5Y6)
					Luggage Cloth
					Up to 10-2-95
	MP92-3 RSS	1			Charcoal, (R7SA)
	MP92-3 RY6	1			Dark Sand, (R7Y6)
					After 10-2-95
	QE26-7 SSS	1			Charcoal, (R7SA)
	QE26-7 SY6	1			Dark Sand, (R7Y6)
					Leather
	MP96-7 RXB	1		74	Graphite, (BLSA)
	MP96-7 RY6	1		74	Dark Sand, (BLY6)
4					COVER ASSEMBLY, Seat Back ***
					Jayne Vinyl
					Up to 11-1-95

MODEL CODES:

72=2 DR Wagon
74=4 DR Wagon
77=Open Body 93" Whlbase
78=Open Body 103" Whlbase - Export
T=2WD
J,N=4WD
U=4WD (RHD)

BODY STYLES:

YJ=Wrangler (4X4) "S"
Weangler (4X4) SE
Wrangler (4X4) Sahara
Wrangler (4X4) Renegade

XJ=Cherokee SE
Cherokee Sport
Cherokee Country

ZJ=Grand Cherokee SE
Grand Cherokee Laredo
Grand Cherolee Limited
ZG=Grand Cherokee European

Y1=Wrangler
X1=Cherokee
Z1=Grand Cherokee
KDX=Vehicles

AR = Use as Required - = Non Illustrated Part P.A.R. = Paint as Required

COVERS, SEAT UPHOLSTERY CHEROKEE, 1995-96
Figure IXJ-530

IXJ-530C

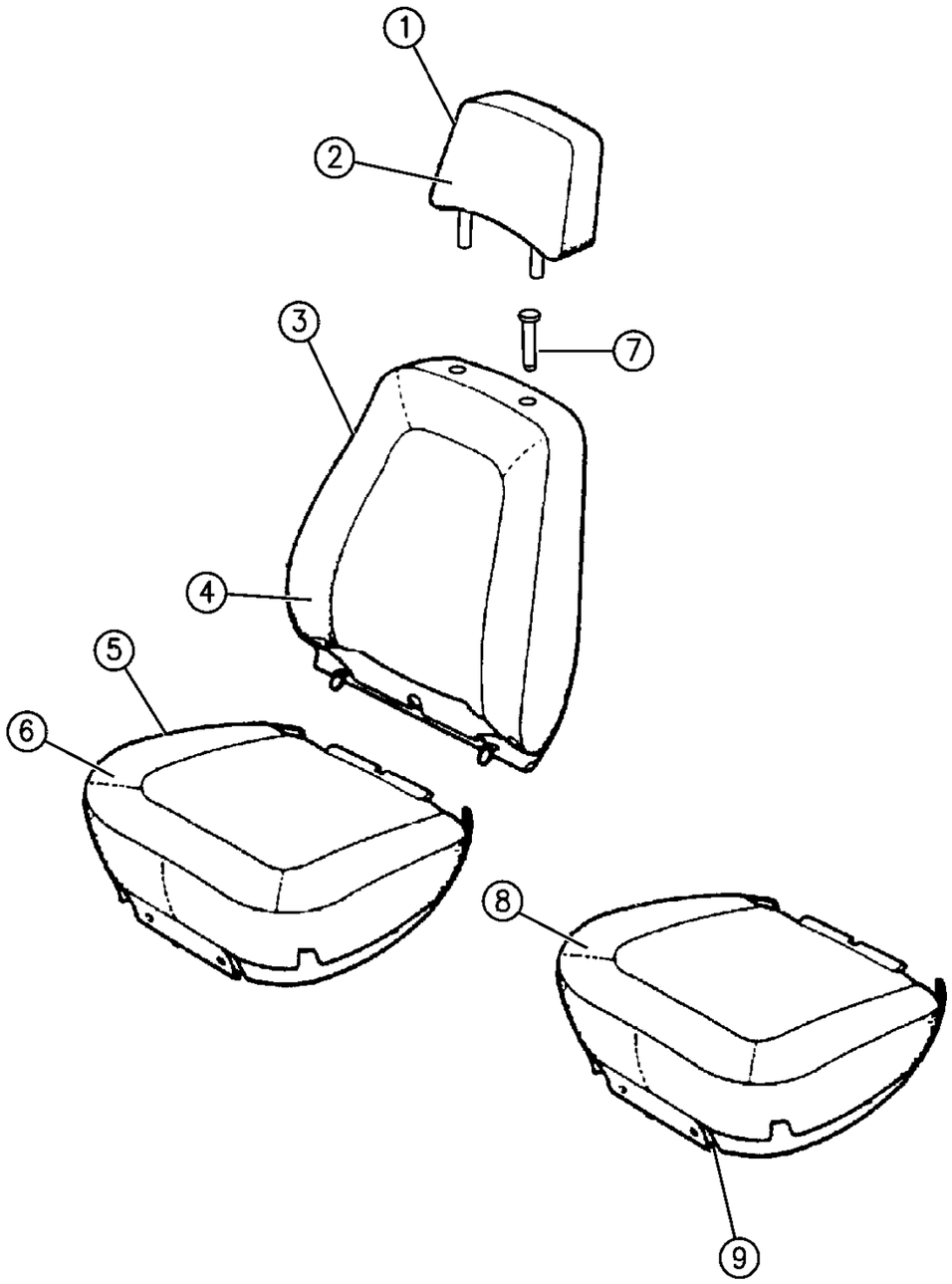

ITEM	PART NUMBER	QTY	BODY	MODEL	DESCRIPTION
	MP84 RS1	2			Charcoal, (A6SA)
	MP84 RY6	2			Dark Sand, (A6Y6)
					After 11-1-95
	QE36 SS1	2			Charcoal, (A6SA)
	QE36 SY6	2			Dark Sand, (A6Y6)
					Jamicia Cloth
					Up to 11-1-95
	MR04 RA8	2			Charcoal, (J5SA, Y5SA)
	MR04 RY6	2			Dark Sand, (J5Y6, Y5Y6)
					After 11-1-95
	QE39 SA8	2			Charcoal, (J5SA, Y5SA)
	QE39 SY6	2			Dark Sand, (J5Y6, Y5Y6)
					Luggage Cloth
					Up to 10-2-95
	MR05 RSS	2			Charcoal, (R7SA)
	MR05 RY6	2			Dark Sand, (R7Y6)
					After 10-2-95
	QE28 SSS	2			Charcoal, (R7SA)
	QE28 SY6	2			Dark Sand, (R7Y6)
					Leather
	MR06 RXB	2		74	Graphite, (BLSA)
	MR06 RY6	2		74	Dark Sand, (BLY6)
5					CUSHION ASSEMBLY, (Includes frame), 1995 ***
					Jayne Vinyl
	MR08-9 RS1	1			Charcoal, (A6SA)
	MR08-9 RY6	1			Dark Sand, (A6Y6)
					Jamaica Cloth
	MR16-7 RA8	1			Charcoal, (J5SA, Y5SA)
	MR16-7 RY6	1			Dark Sand, (J5Y6, Y5Y6)
					Luggage Cloth
	MR18-9 RSS	1			Charcoal, (R7SA)
	MR18-9 RY6	1			Dark Sand, (R7Y6)
					Leather
	MR36-7 RXB	1		74	Graphite, (BLSA)
	MR36-7 RY6	1		74	Dark Sand, (BLY6)
6					COVER, Cushion, 1995
					Jayne Vinyl
	MR38-9 RS1	1			Charcoal, (A6SA)
	MR38-9 RY6	1			Dark Sand, (A6Y6)
					Jamaica Cloth
	MR40-1 RA8	1			Charcoal, (J5SA, Y5SA)
	MR40-1 RY6	1			Dark Sand, (J5Y6, Y5Y6)

MODEL CODES:

72=2 DR Wagon
74=4 DR Wagon
77=Open Body 93" Whlbase
78=Open Body 103" Whlbase - Export
T=2WD
J,N=4WD
U=4WD (RHD)

BODY STYLES:

YJ=Wrangler (4X4) "S"
Weangler (4X4) SE
Wrangler (4X4) Sahara
Wrangler (4X4) Renegade
XJ=Cherokee SE
Cherokee Sport
Cherokee Country
ZJ=Grand Cherokee SE
Grand Cherokee Laredo
Grand Cherolee Limited
ZG=Grand Cherokee European
Y1=Wrangler
X1=Cherokee
Z1=Grand Cherokee
KDX=Vehicles

AR = Use as Required - = Non Illustrated Part P.A.R. = Paint as Required

COVERS, SEAT UPHOLSTERY CHEROKEE, 1995-96
Figure IXJ-530

IXJ-530C

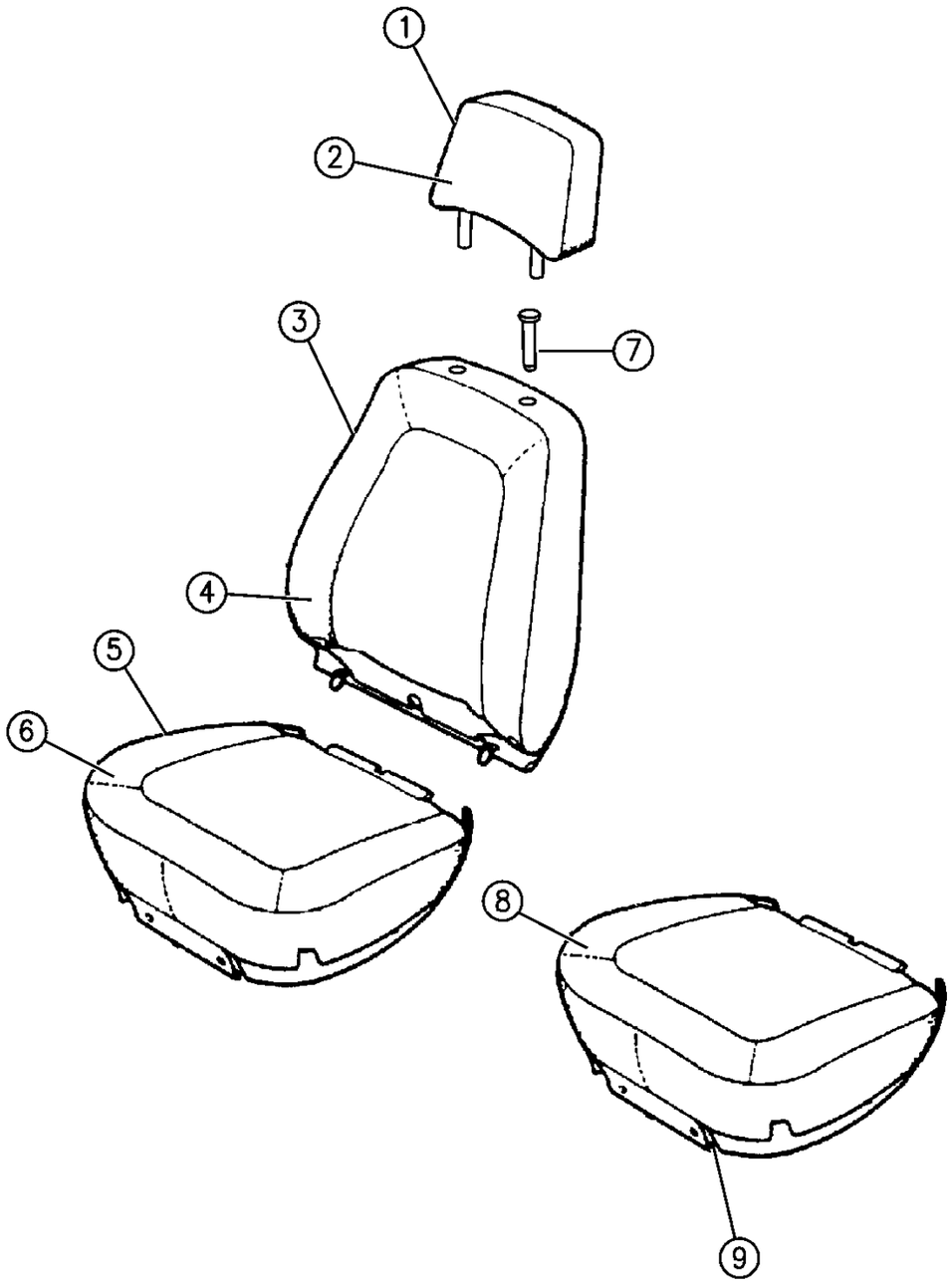

ITEM	PART NUMBER	QTY	BODY	MODEL	DESCRIPTION
					Luggage Cloth
	MR44-5 RSS	1			Charcoal, (R7SA)
	MR44-5 RY6	1			Dark Sand, (R7Y6)
					Leather
	MR46-7 RXB	1		74	Graphite, (BLSA)
	MR46-7 RY6	1		74	Dark Sand, (BLY6)
7	4723 834	4			CYLINDER, Headrest, (Locking Serviced Only)
8					COVER & PAD ASSY., 1996 ***
					Jayne Vinyl
					Up to 11-1-95
	PW90 SS1	1			Charcoal, Right, (A6SA)
	PW91 SS1	1			Charcoal, Left, (A6SA)
	PW90 SY6	1			Dark Sand, Right, (A6Y6)
	PW91 SY6	1			Dark Sand, Left, (A6Y6)
					After 11-1-95
	QE40 SS1	1			Charcoal, Right, (A6SA)
	QE41 SS1	1			Charcoal, Left, (A6SA)
	QE40 SY6	1			Dark Sand, Right, (A6Y6)
	QE41 SY6	1			Dark Sand, Left, (A6Y6)
					Jamaica Cloth
					Up to 11-1-95
	PW92 SA8	1			Charcoal, Right, (J5SA)
	PW93 SA8	1			Charcoal, Left, (J5SA)
	PW92 SY6	1			Dark Sand, Right, (J5Y6)
	PW93 SY6	1			Dark Sand, Left, (J5Y6)
					After 11-1-95
	QE46 SA8	1			Charcoal, Right, (J5SA)
	QE47 SA8	1			Charcoal, Left, (J5SA)
	QE46 SY6	1			Dark Sand, Right, (J5Y6)
	QE47 SY6	1			Dark Sand, Left, (J5Y6)
					Luggage Cloth
					Up to 11-1-95
	PW94 SSS	1			Charcoal, Right, (R7SA)
	PW95 SSS	1			Charcoal, Left, (R7SA)
	PW94 SY6	1			Dark Sand, Right, (R7Y6)
	PW95 SY6	1			Dark Sand, Left, (R7Y6)
					After 11-1-95
	QE30 SSS	1			Charcoal, Right, (R7SA)
	QE31 SSS	1			Charcoal, Left, (R7SA)
	QE30 SY6	1			Dark Sand, Right, (R7Y6)
	QE31 SY6	1			Dark Sand, Left, (R7Y6)
					Leather

MODEL CODES:

72=2 DR Wagon
74=4 DR Wagon
77=Open Body 93" Whlbase
78=Open Body 103" Whlbase - Export
T=2WD
J,N=4WD
U=4WD (RHD)

BODY STYLES:

YJ=Wrangler (4X4) "S"
Weangler (4X4) SE
Wrangler (4X4) Sahara
Wrangler (4X4) Renegade
XJ=Cherokee SE
Cherokee Sport
Cherokee Country
ZJ=Grand Cherokee SE
Grand Cherokee Laredo
Grand Cherolee Limited
ZG=Grand Cherokee European
Y1=Wrangler
X1=Cherokee
Z1=Grand Cherokee
KDX=Vehicles

AR = Use as Required - = Non Illustrated Part P.A.R. = Paint as Required

COVERS, SEAT UPHOLSTERY CHEROKEE, 1995-96
Figure IXJ-530

IXJ-530C

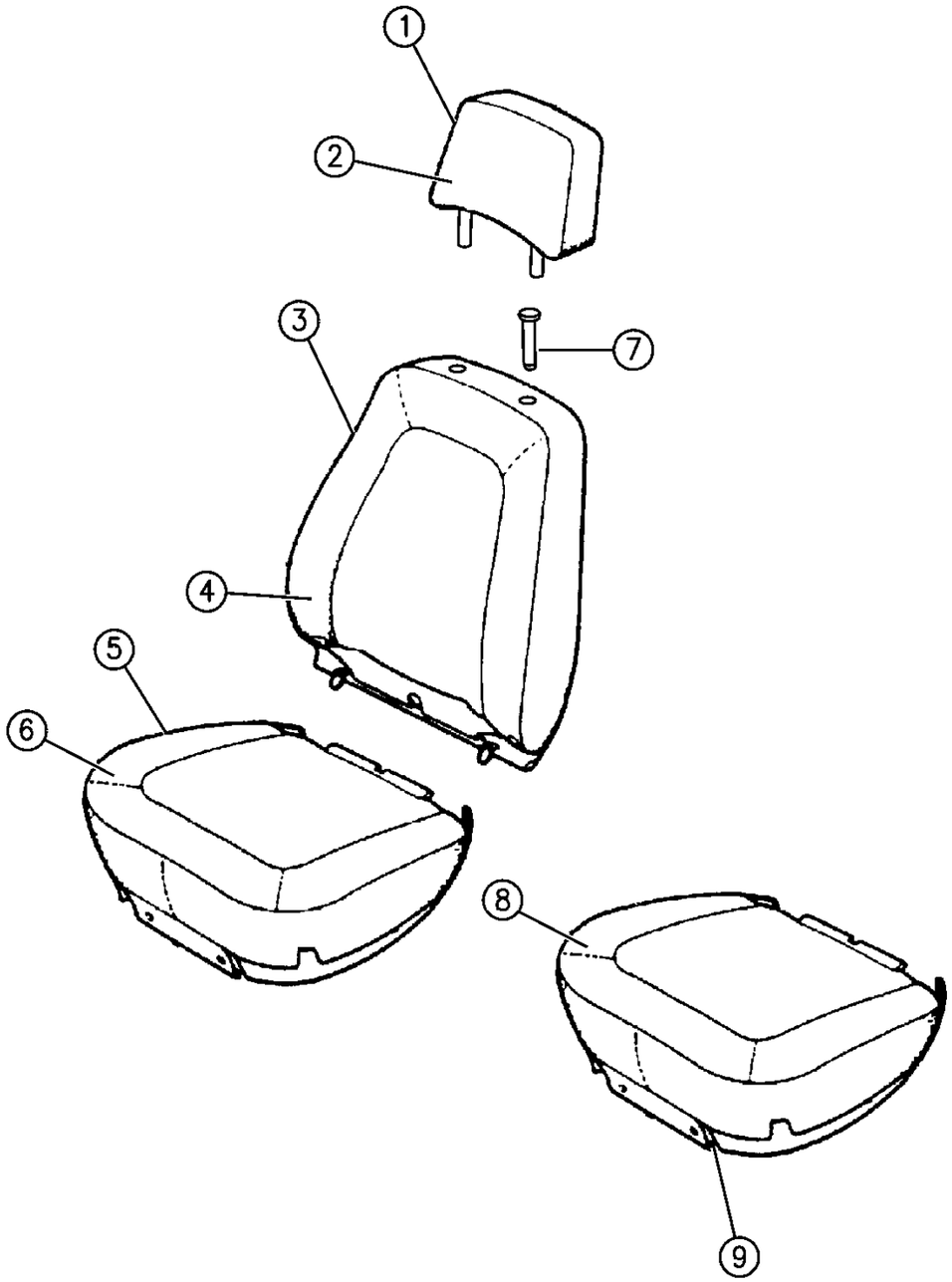

ITEM	PART NUMBER	QTY	BODY	MODEL	DESCRIPTION
	PW96 SXB	1			Graphite, Right
	PW97 SXB	1			Graphite, Left
	PW96 SY6	1			Dark Sand, Right
	PW97 SY6	1			Dark Sand, Left
9					FRAME, 1996, Front Seat Cushion
	4856 470	1			Right
	4856 471	1			Left

MODEL CODES:

72=2 DR Wagon
74=4 DR Wagon
77=Open Body 93" Whlbase
78=Open Body 103" Whlbase - Export
T=2WD
J,N=4WD
U=4WD (RHD)

BODY STYLES:

YJ=Wrangler (4X4) "S"
Weangler (4X4) SE
Wrangler (4X4) Sahara
Wrangler (4X4) Renegade

XJ=Cherokee SE
Cherokee Sport
Cherokee Country

ZJ=Grand Cherokee SE
Grand Cherokee Laredo
Grand Cherolee Limited
ZG=Grand Cherokee European

Y1=Wrangler
X1=Cherokee
Z1=Grand Cherokee
KDX=Vehicles

AR = Use as Required - = Non Illustrated Part P.A.R. = Paint as Required

FRAME AND PAD REAR SEAT CHEROKEE
Figure IXJ-605

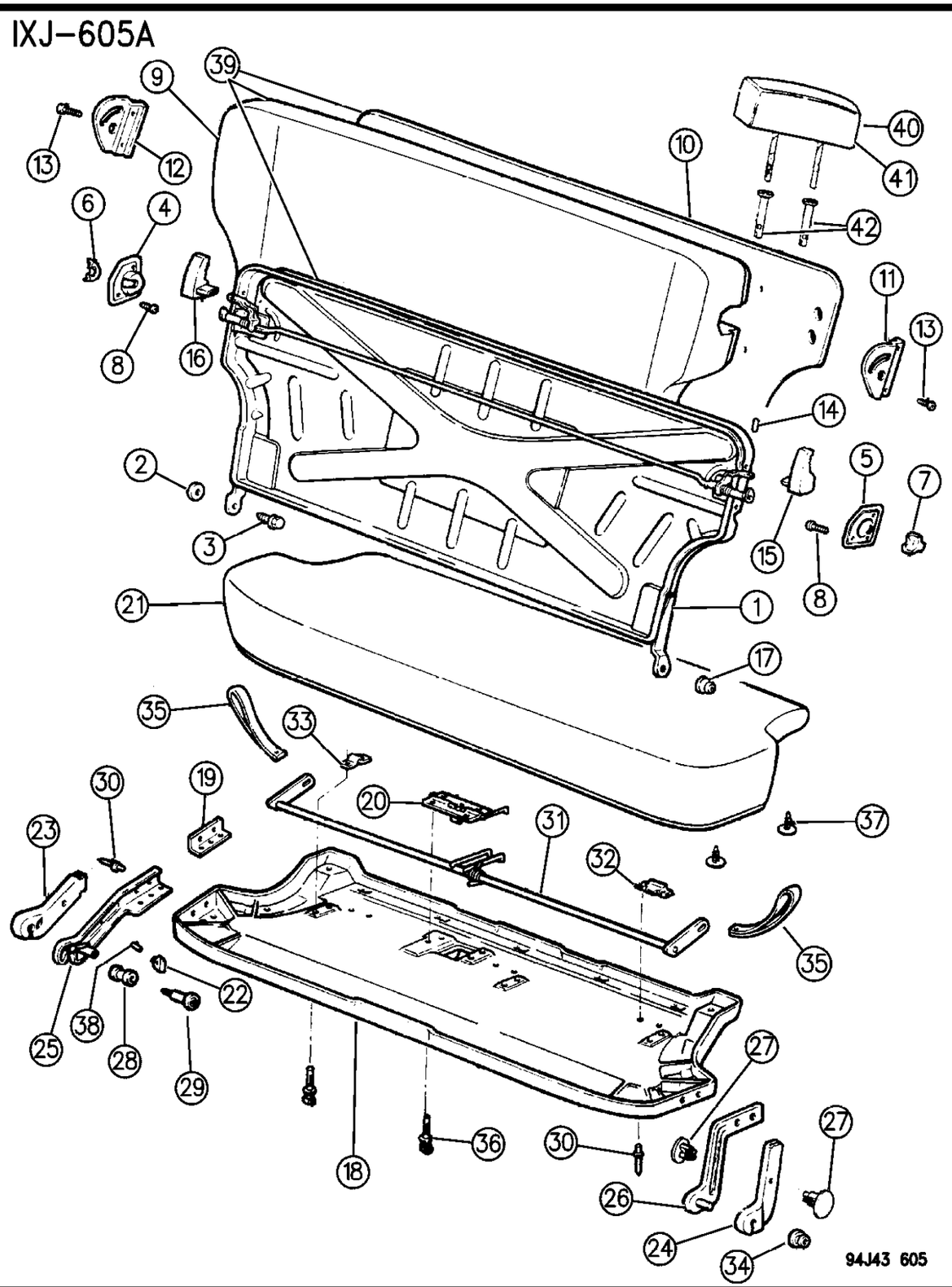

ITEM	PART NUMBER	QTY	BODY	MODEL	DESCRIPTION
1					PANEL, Back, 1994
	5502 6016	1			Except EUROPE
	5502 6022	1			EUROPE
	5502 6020	1		72	w/European Commercial Package, EUROPE
2	5500 5617	AR			SPACER
3	3420 1537	2			SCREW, Rear Seat Back Hinge
4-5	5519 5980-1	1			BRACKET ASSY., Lock Striker & Fastener-Loop ***
6-7	5500 1212-3	1			BUMPER, Latch Striker
8	3420 2189	6			SCREW
9	5529 4776	1			PAD, Back, 1994
10	5500 3616	1			BOARD, Foundation, 1994
11-12					BEZEL, Back Trim
	5AC66-7 JS1	1			Charcoal
	5AC66-7 JA8	1			Dark Charcoal
	5AC66-7 JY6	1			Dark Sand
13	3420 1314	4			SCREW
14	J045 5735	3			PIN, Spring
15-16					KNOB, Seat Latch
					1994,95
	5AD46-7 JS1	1			Charcoal
	5AD46-7 JA8	1			Dark Charcoal
	5AD46-7 JY6	1			Dark Sand
					1996
	QC04-5 SS1	1			Charcoal
	QC04-5 SY6	1			Dark Sand
17	5500 1230	1			GROMMET
18	5519 5237	1			PANEL, Cushion
19	5500 2833	2			REINFORCEMENT
20	5519 5372	1			LATCH, Cushion
-	6500 911	4			RIVET, Latch to Panel
21	5500 4573	1			PAD, Cushion
22					KNOB, Seat Latch
	5AC6 8JS1	1			Charcoal
	5AC6 8JA8	1			Dark Charcoal
	5AC6 8JY6	1			Dark Sand
23-24					COVER, Hinge
	5AC46-7 KS1	1			Charcoal
	5AC46-7 JA8	1			Dark Charcoal
	5AC46-7 JY6	1			Sand
25-26	5500 1136-7	1			HINGE, Latch
27	3420 1845	4			RIVET, Ratchet Type, Hinge Cover Mounting
28	5500 2437	1			BUSHING

MODEL CODES:

72=2 DR Wagon
74=4 DR Wagon
77=Open Body 93" Whlbase
78=Open Body 103" Whlbase - Export
T=2WD
J,N=4WD
U=4WD (RHD)

BODY STYLES:

YJ=Wrangler (4X4) "S"
Weangler (4X4) SE
Wrangler (4X4) Sahara
Wrangler (4X4) Renegade
XJ=Cherokee SE
Cherokee Sport
Cherokee Country
ZJ=Grand Cherokee SE
Grand Cherokee Laredo
Grand Cherolee Limited
ZG=Grand Cherokee European
Y1=Wrangler
X1=Cherokee
Z1=Grand Cherokee
KDX=Vehicles

AR = Use as Required - = Non Illustrated Part P.A.R. = Paint as Required

« RETURN TO GROUP INDEX

FRAME AND PAD REAR SEAT CHEROKEE
Figure IXJ-605

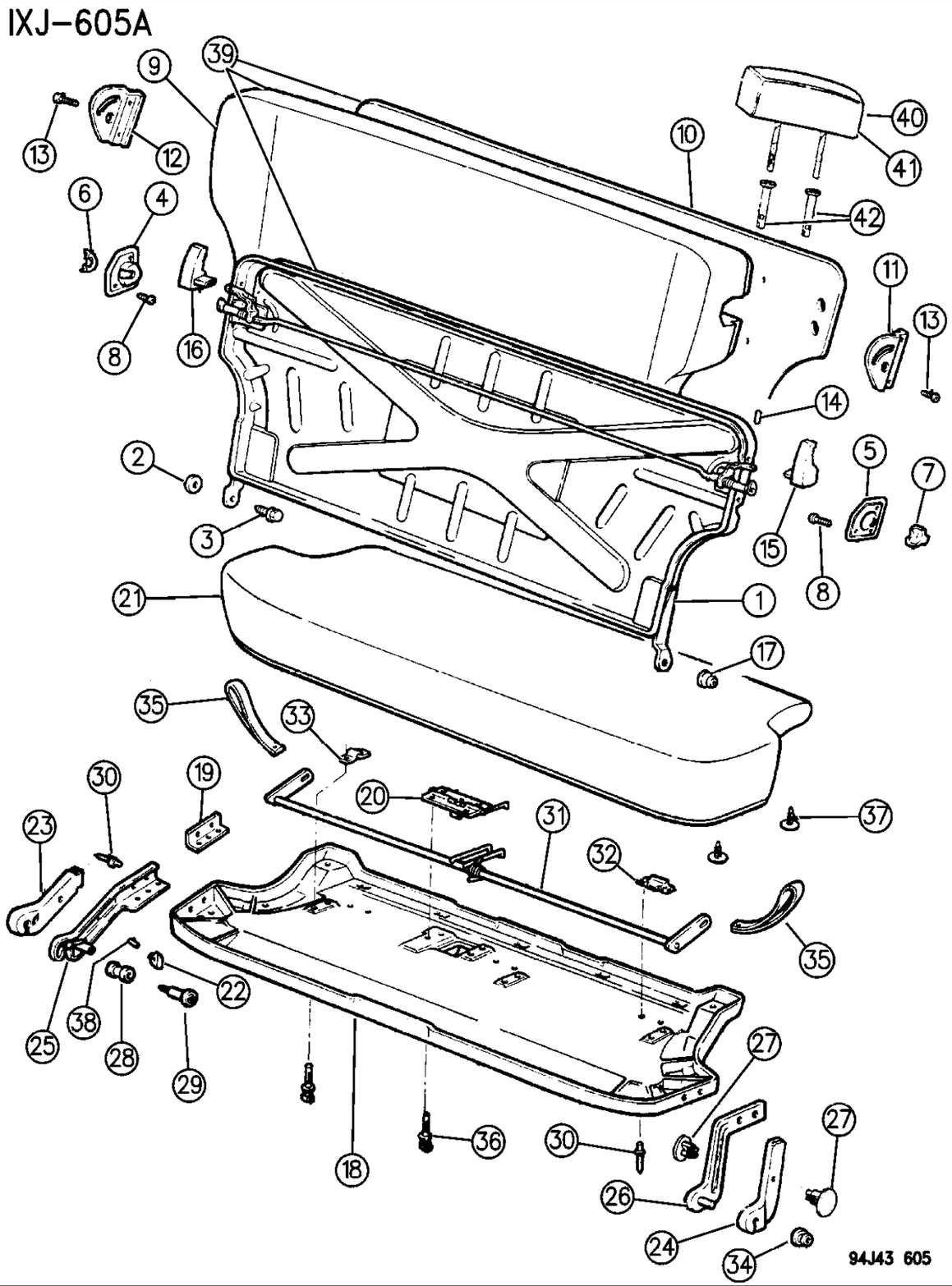

ITEM	PART NUMBER	QTY	BODY	MODEL	DESCRIPTION
29	3420 1530	1			BOLT
30	3420 1557	8			RIVET, Dome Head Type, Hinge to Cushion Panel
31	5500 4302	1			RELEASE, Latch
32					BRACKET, Pad Retainer
	5500 4317	3			Up to 2-24-94
	5519 5937	3			After 2-24-94
33	5500 4301	3			BRACKET, Latch
34	5500 1230	1			GROMMET
35					STRAP, Seat Latch
	5AJ4 7JS1	2			Charcoal
	5AJ4 7JXB	2			Dark Charcoal, 1994
	5AJ4 7JA8	2			Dark Charcoal, 1995,96
	5AJ4 7JY6	2			Dark Sand
36	3420 2078	AR			RIVET, Plastic
37					FASTENER
	5AA3 4JS1	6			Charcoal
	5AA3 4JA8	6			Dark Charcoal
	5AA3 4JY6	6			Sand
38	J045 5735	1			PIN, Spring
39					BACK ASSEMBLY, Rear Seat, Includes Pad
					1995
					JAYNE VINYL
	MM67 RA8	1			Dark Charcoal, (Y5SA)
	MM67 RS1	1			Charcoal, (A6SA)
	MM67 RY6	1			Dark Sand, (A6Y6, Y5Y6)
					JAMACIA CLOTH
	MM69 RA8	1			Charcoal, (J5SA)
	MM69 RY6	1			Dark Sand, (J5Y6)
					LUGGAGE CLOTH
	MM71 RSS	1			Charcoal, (R7SA)
	MM71 RY6	1			Dark Sand, (R7Y6)
					LUGGAGE CLOTH, EUROPE
	MM73 RSS	1			Charcoal, (R7SA)
	MM73 RY6	1			Dark Sand, (R7Y6)
					LEATHER
	MM75 RXB	1			Graphite, (BLSA)
	MM75 RY6	1			Dark Sand, (BLY6)
					LEATHER, EUROPE
	MM77 RXB	1			Graphite, (BLSA)
	MM77 RY6	1			Dark Sand, (BLY6)
					1996
					JAYNE VINYL

MODEL CODES:

72=2 DR Wagon
74=4 DR Wagon
77=Open Body 93" Whlbase
78=Open Body 103" Whlbase - Export
T=2WD
J,N=4WD
U=4WD (RHD)

BODY STYLES:

YJ=Wrangler (4X4) "S"
Weangler (4X4) SE
Wrangler (4X4) Sahara
Wrangler (4X4) Renegade
XJ=Cherokee SE
Cherokee Sport
Cherokee Country
ZJ=Grand Cherokee SE
Grand Cherokee Laredo
Grand Cherolee Limited
ZG=Grand Cherokee European
Y1=Wrangler
X1=Cherokee
Z1=Grand Cherokee
KDX=Vehicles

AR = Use as Required - = Non Illustrated Part P.A.R. = Paint as Required

FRAME AND PAD REAR SEAT CHEROKEE
Figure IXJ-605

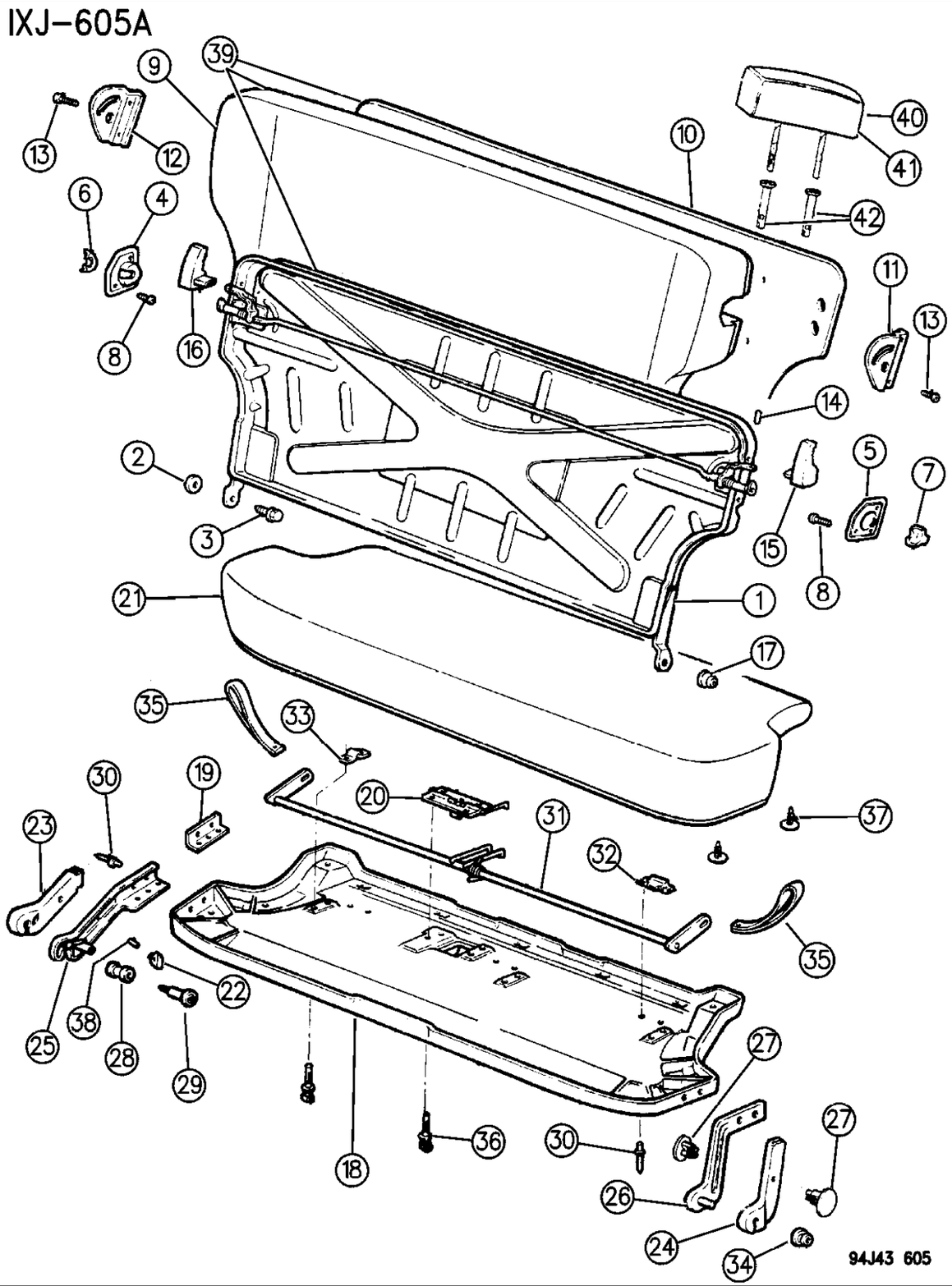

ITEM	PART NUMBER	QTY	BODY	MODEL	DESCRIPTION
	PW89 SS1	1			Charcoal, (A6SA)
	PW89 SY6	1			Dark Sand, (A6Y6)
					JAMACIA CLOTH
	PW98 SA8	1			Dark Charcoal, (J5SA)
	PW98 SY6	1			Dark Sand, (J5Y6)
					LUGGAGE CLOTH
	PW99 SSS	1			Charcoal, (R7SA)
	PW99 SY6	1			Dark Sand, (R7Y6)
					LUGGAGE CLOTH, EUROPE
	PX06 SSS	1			Charcoal, (R7SA)
	PX06 SY6	1			Dark Sand, (R7Y6)
					LEATHER
	PX07 SXB	1			Graphite, (BLSA)
	PX07 SY6	1			Dark Sand, (BLSA)
					LEATHER, EUROPE
	PX08 SXB	1			Graphite, (BLSA)
	PX08 SY6	1			Dark Sand, (BLY6)
40					HEADREST, EUROPE
					LUGGAGE CLOTH
	MM88 RSS	2			Charcoal, (R7SA)
	MM88 RY6	2			Dark Sand, (R7Y6)
					LEATHER
	MM91 RXB	2			Graphite, (BLSA)
	MM91 RY6	2			Dark Sand, (BLY6)
41					HEADREST COVER, EUROPE ***
					LUGGAGE CLOTH
	MM89 RSS	2			Charcoal, (R7SA)
	MM89 RY6	2			Dark Sand, (R7Y6)
					LEATHER
	MM94 RXB	2			Graphite, (BLSA)
	MM94 RY6	2			Dark Sand, (BLY6)
42	4723 834	2			CYLINDER, Headrest, (Latching Serviced Only)

MODEL CODES:

72=2 DR Wagon
74=4 DR Wagon
77=Open Body 93" Whlbase
78=Open Body 103" Whlbase - Export
T=2WD
J,N=4WD
U=4WD (RHD)

BODY STYLES:

YJ=Wrangler (4X4) "S"
Weangler (4X4) SE
Wrangler (4X4) Sahara
Wrangler (4X4) Renegade
XJ=Cherokee SE
Cherokee Sport
Cherokee Country
ZJ=Grand Cherokee SE
Grand Cherokee Laredo
Grand Cherolee Limited
ZG=Grand Cherokee European
Y1=Wrangler
X1=Cherokee
Z1=Grand Cherokee
KDX=Vehicles

AR = Use as Required - = Non Illustrated Part P.A.R. = Paint as Required

COVERS, SEAT UPHOLSTERY CHEROKEE, 1994
Figure IXJ-520

IXJ-610

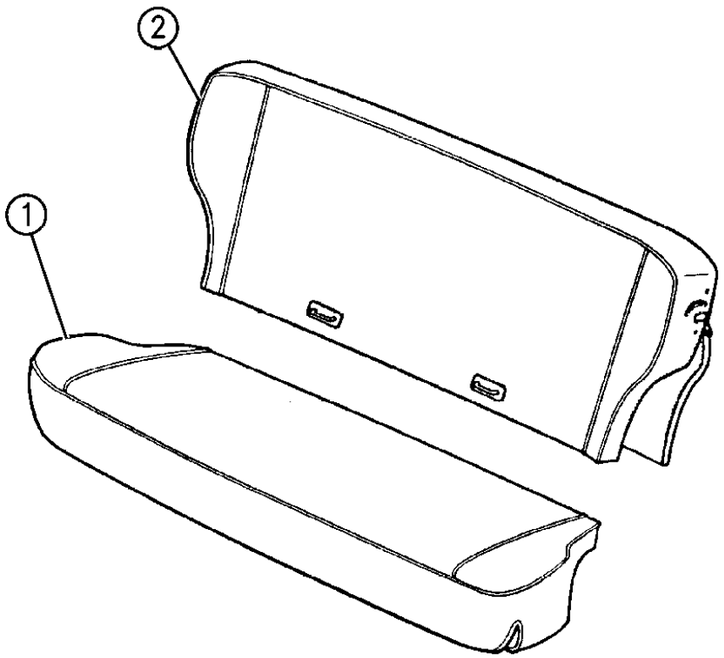

94J43 610

ITEM	PART NUMBER	QTY	BODY	MODEL	DESCRIPTION
1					COVER, Cushion
					LUGGAGE CLOTH
	5DU3 1MSS	1			Charcoal, (Q7SA)
	5DU3 1MY6	1			Dark Sand, (Q7Y6)
					JAMAICA CLOTH
	5CC5 8KA8	1			Dark Charcoal, (A7SA)
	5CC5 8KY6	1			Dark Sand, (A7Y6)
					LEATHER
	5AH8 3JXB	1			Charcoal, (XLSA)
	5AH8 3JY6	1			Dark Sand, (XLY6)
					VINYL
	5CC5 4KS1	1			Charcoal, (C8SA)
	5CC5 4KY6	1			Dark Sand, (C8Y6)
2					COVER, Back
					LUGGAGE CLOTH
	5DU5 4MSS	1			Charcoal, (Q7SA)
	5DU5 4MY6	1			Dark Sand, (Q7Y6)
					JAMAICA CLOTH
	5DU5 5MA8	1			Dark Charcoal, (A7SA)
	5DU5 5MY6	1			Dark Sand, (A7Y6)
					LEATHER
	5CY7 6LXB	1			Charcoal, (XLSA)
	5CY7 6LY6	1			Dark Sand, (XLY6)
					VINYL
	5DU5 6MS1	1			Charcoal, (C8SA,A8SA)
	5DU5 6MY6	1			Dark Sand, (C8Y6,A8Y6)

NOTE: The following material (roll goods) are available, order by the inch. Example; to receive 20 linier inches of material - order quantity of 20. e Adhesive #312.

-			BODYCLOTH, Jamaica, 60" Wide
-	R095 KA8	AR	Dark Charcoal, (A7SA)
-	R095 KY6	AR	Dark Sand, (A7Y6)
-			Vinyl, Jayne Grain, 59" Wide ***
-	R610 KS1	AR	Charcoal, (A8SA,C8SA)
-	R610 KY6	AR	Dark Sand, (A8Y6,C8Y6)

MODEL CODES:

72=2 DR Wagon
74=4 DR Wagon
77=Open Body 93" Whlbase
78=Open Body 103" Whlbase - Export
T=2WD
J,N=4WD
U=4WD (RHD)

BODY STYLES:

YJ=Wrangler (4X4) "S"
Weangler (4X4) SE
Wrangler (4X4) Sahara
Wrangler (4X4) Renegade
XJ=Cherokee SE
Cherokee Sport
Cherokee Country
ZJ=Grand Cherokee SE
Grand Cherokee Laredo
Grand Cherolee Limited
ZG=Grand Cherokee European
Y1=Wrangler
X1=Cherokee
Z1=Grand Cherokee
KDX=Vehicles

AR = Use as Required - = Non Illustrated Part P.A.R. = Paint as Required

COVERS, SEAT UPHOLSTERY CHEROKEE, 1995-96
Figure IXJ-530

IXJ-620

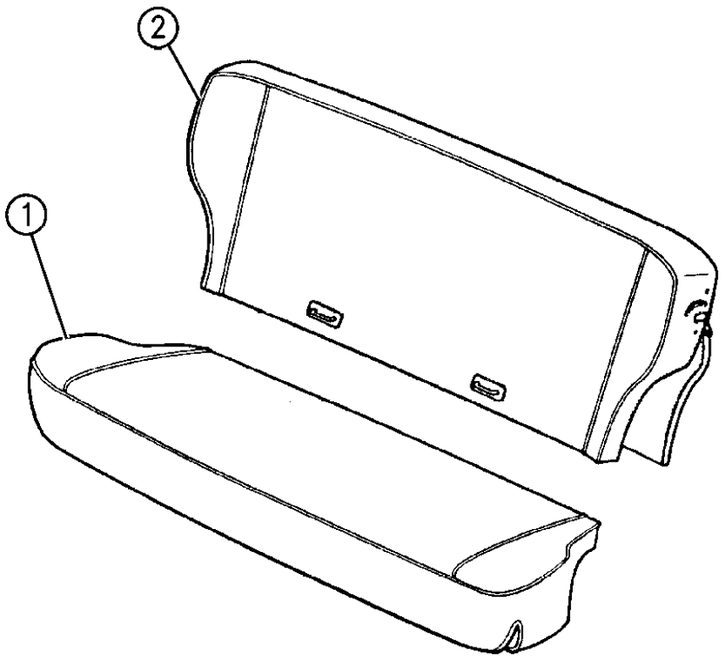

94J43 620

ITEM	PART NUMBER	QTY	BODY	MODEL	DESCRIPTION
1					COVER, Cushion
					LUGGAGE CLOTH
	5DU3 1MSS	1			Charcoal, (R7SA, BLSA)
	5DU3 1MY6	1			Dark Sand, (R7Y6, BLY6)
					JAMAICA CLOTH
	5CC5 8KA8	1			Dark Charcoal, (J5SA)
	5CC5 8KY6	1			Dark Sand, (J5Y6)
					LEATHER
	5AH8 3JXB	1			Graphite, (BLSA)
	5AH8 3JY6	1			Dark Sand, (BLY6)
					VINYL
	5CC5 4KS1	1			Charcoal, (A6SA, Y5SA)
	5CC5 4KY6	1			Dark Sand, (A6Y6, Y5Y6)
2					COVER, Back
					1995
					LUGGAGE CLOTH
	5DU5 4MSS	1			Charcoal, (R7SA)
	5DU5 4MY6	1			Dark Sand, (R7Y6)
					LUGGAGE CLOTH, EUROPE
	MM79 RSS	1			Charcoal, (R7SA)
	MM79 RY6	1			Dark Sand, (R7Y6)
					JAMAICA CLOTH
	5DU5 5MA8	1			Dark Charcoal, (J5SA)
	5DU5 5MY6	1			Dark Sand, (J5Y6)
					LEATHER
	5CY7 6LXB	1			Graphite, (BLSA)
	5CY7 6LY6	1			Dark Sand, (BLY6)
					LEATHER, EUROPE
	MM81 RXB	1			Graphite, (BLSA)
	MM81 RY6	1			Dark Sand, (BLY6)
					JAYNE VINYL
	5DU5 6MS1	1			Charcoal, (A6SA, Y5SA)
	5DU5 6MY6	1			Dark Sand, (A6Y6, Y5Y6)
					1996
					LUGGAGE CLOTH
	QV18 SSSAA	1			Charcoal, (R7SA)
	QV18 SY6AA	1			Dark Sand, (R7Y6)
					LUGGAGE CLOTH, EUROPE
	QV24 SSSAA	1			Charcoal, (R7SA)
	QV24 SY6AA	1			Dark Sand, (R7Y6)
					JAMACIA CLOTH
	QV14 SA8AA	1			Charcoal, (J5SA)

MODEL CODES:

72=2 DR Wagon
74=4 DR Wagon
77=Open Body 93" Whlbase
78=Open Body 103" Whlbase - Export
T=2WD
J,N=4WD
U=4WD (RHD)

BODY STYLES:

YJ=Wrangler (4X4) "S"
Weangler (4X4) SE
Wrangler (4X4) Sahara
Wrangler (4X4) Renegade
XJ=Cherokee SE
Cherokee Sport
Cherokee Country
ZJ=Grand Cherokee SE
Grand Cherokee Laredo
Grand Cherolee Limited
ZG=Grand Cherokee European
Y1=Wrangler
X1=Cherokee
Z1=Grand Cherokee
KDX=Vehicles

AR = Use as Required - = Non Illustrated Part P.A.R. = Paint as Required

COVERS, SEAT UPHOLSTERY CHEROKEE, 1995-96
Figure IXJ-530

IXJ-620

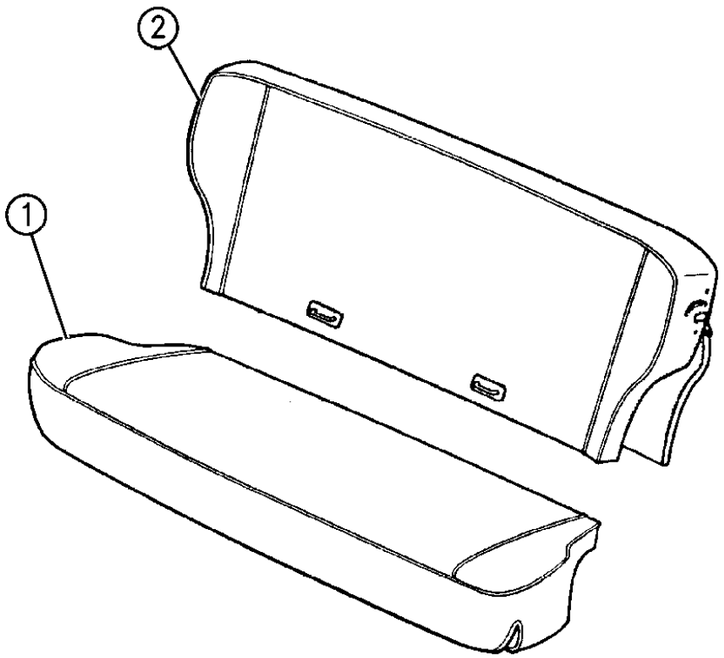

94J43 620

ITEM	PART NUMBER	QTY	BODY	MODEL	DESCRIPTION
	QV14 SY6AA	1			Dark Sand, (J5Y6)
					LEATHER
	QV12 SXBAA	1			Graphite, (BLSA)
	QV12 SY6AA	1			Dark Sand, (BLY6)
					LEATHER, EUROPE
	QV16 SXBAA	1			Graphite, (BLSA)
	QV16 SY6AA	1			Dark Sand, (BLY6)
					JAYNE VINYL
	QV09 SS1AA	1			Charcoal, (A6SA)
	QV09 SY6AA	1			Dark Sand, (A6Y6)
	5003 422AA	1			TETHER PACKAGE, Child Seat ***
NOTE: The following material (roll goods) are available, order by the inch. Example; to receive 20 linier inches of material - order quantity of 20. e Adhesive #312.					
-					BODYCLOTH, Jamaica, 60" Wide
-	R095 KA8	AR			Dark Charcoal, (A7SA)
-	R095 KY6	AR			Dark Sand, (A7Y6)
-					Vinyl, Jayne Grain, 59" Wide ***
-	R610 KS1	AR			Charcoal, (A8SA,C8SA)
-	R610 KY6	AR			Dark Sand, (A8Y6,C8Y6)

MODEL CODES:

72=2 DR Wagon
74=4 DR Wagon
77=Open Body 93" Whlbase
78=Open Body 103" Whlbase - Export
T=2WD
J,N=4WD
U=4WD (RHD)

BODY STYLES:

YJ=Wrangler (4X4) "S"
Weangler (4X4) SE
Wrangler (4X4) Sahara
Wrangler (4X4) Renegade
XJ=Cherokee SE
Cherokee Sport
Cherokee Country
ZJ=Grand Cherokee SE
Grand Cherokee Laredo
Grand Cherolee Limited
ZG=Grand Cherokee European
Y1=Wrangler
X1=Cherokee
Z1=Grand Cherokee
KDX=Vehicles

AR = Use as Required - = Non Illustrated Part P.A.R. = Paint as Required

SEAT BELTS, FRONT SEAT CHEROKEE 2 DOOR
Figure IXJ-710

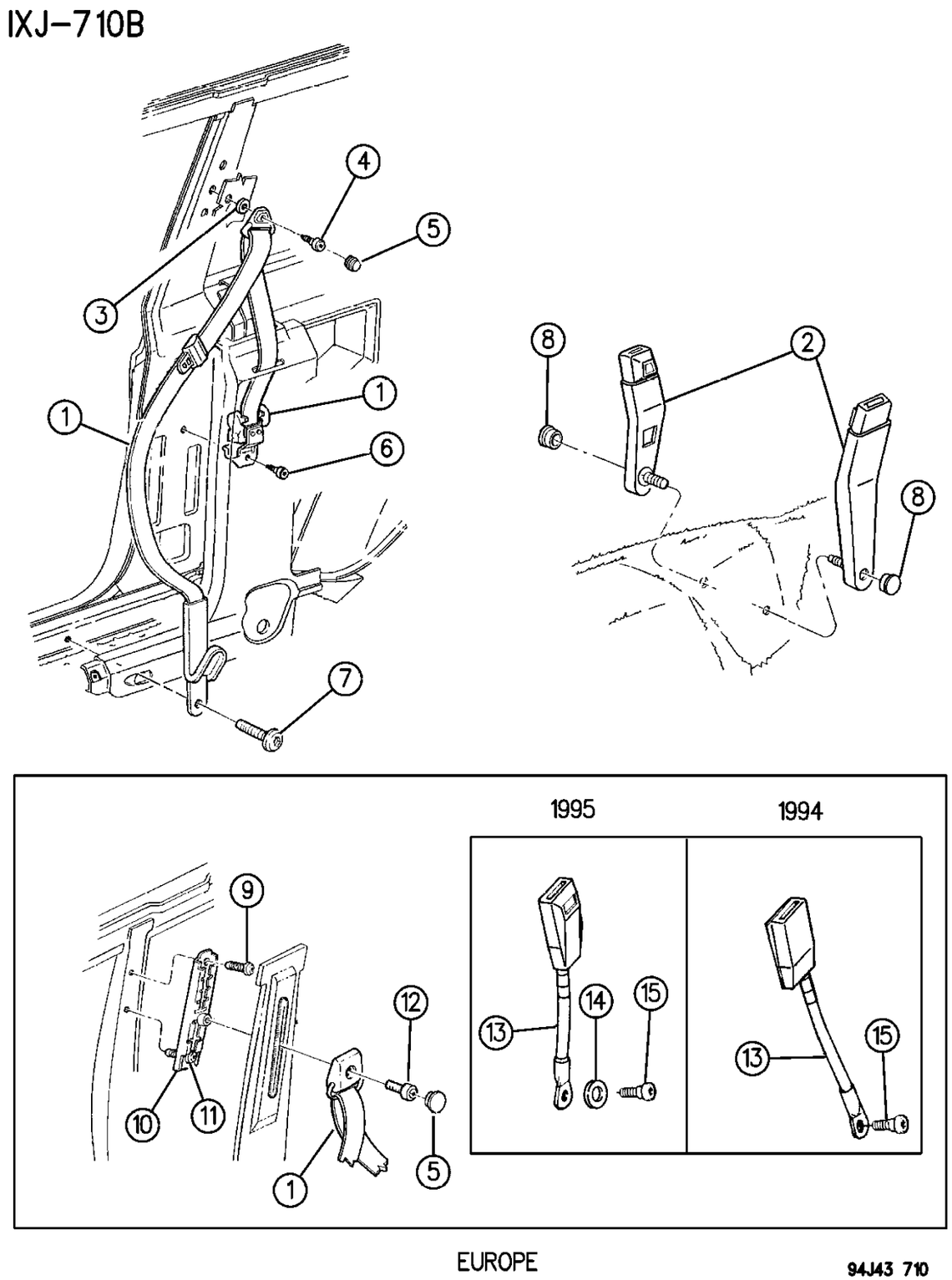

ITEM	PART NUMBER	QTY	BODY	MODEL	DESCRIPTION
1					BELT, Retractor Assembly
					Label # 55314750-1
					1994
	5DN84-5 PA8	1			Charcoal
	5DN84-5 PY6	1			Sand
					LABEL # 55216960-1
					1995, Up to 2-21-95
	5ER68-9 RAZ	1			Agate
	5ER68-9 RK5	1			Taupe
					Label # 55217022-3
					1995, After 2-21-95
	5ES46-7 RAZ	1			Agate
	5ES46-7 RK5	1			Taupe
					Label # 55217144
					1996
	5EZ14-5 SAZ	1			Agate
	5EZ14-5 SK5	1			Tan
					Label # 55314744
					Black, EUROPE - KDX
	5DN7 1PX9	2			1994
	5531 4860	2			1995
	5521 7140	2			1996
2					BELT, Buckle Half, Inboard, Except EUROPE
					Label # 55314572-3
					1994
	5CR94-5 LA8	1			Charcoal
	5CR94-5 LY6	1			Sand
					Label # 55314572-3
					1995, Up to 2-21-95
	5CR94-5 RAZ	1			Agate
	5CR94-5 RK5	1			Taupe
					Label # 55216958-9
					1995,96, After 2-21-95
	5ER66-7 RAZ	1			Agate
	5ER66-7 RK5	1			Taupe
3	J400 7315	2			WASHER
4					BOLT, Seat Belt Web Guide Mounting
	6034 449	2			1994,95
	6034 419	2			1996
	6034 230	2			EUROPE
5					COVER, Bolt
					Tiangular, Turning Loop Cover, 1994

MODEL CODES:

72=2 DR Wagon
74=4 DR Wagon
77=Open Body 93" Whlbase
78=Open Body 103" Whlbase - Export
T=2WD
J,N=4WD
U=4WD (RHD)

BODY STYLES:

YJ=Wrangler (4X4) "S"
Weangler (4X4) SE
Wrangler (4X4) Sahara
Wrangler (4X4) Renegade
XJ=Cherokee SE
Cherokee Sport
Cherokee Country
ZJ=Grand Cherokee SE
Grand Cherokee Laredo
Grand Cherolee Limited
ZG=Grand Cherokee European
Y1=Wrangler
X1=Cherokee
Z1=Grand Cherokee
KDX=Vehicles

AR = Use as Required - = Non Illustrated Part P.A.R. = Paint as Required

SEAT BELTS, FRONT SEAT CHEROKEE 2 DOOR
Figure IXJ-710

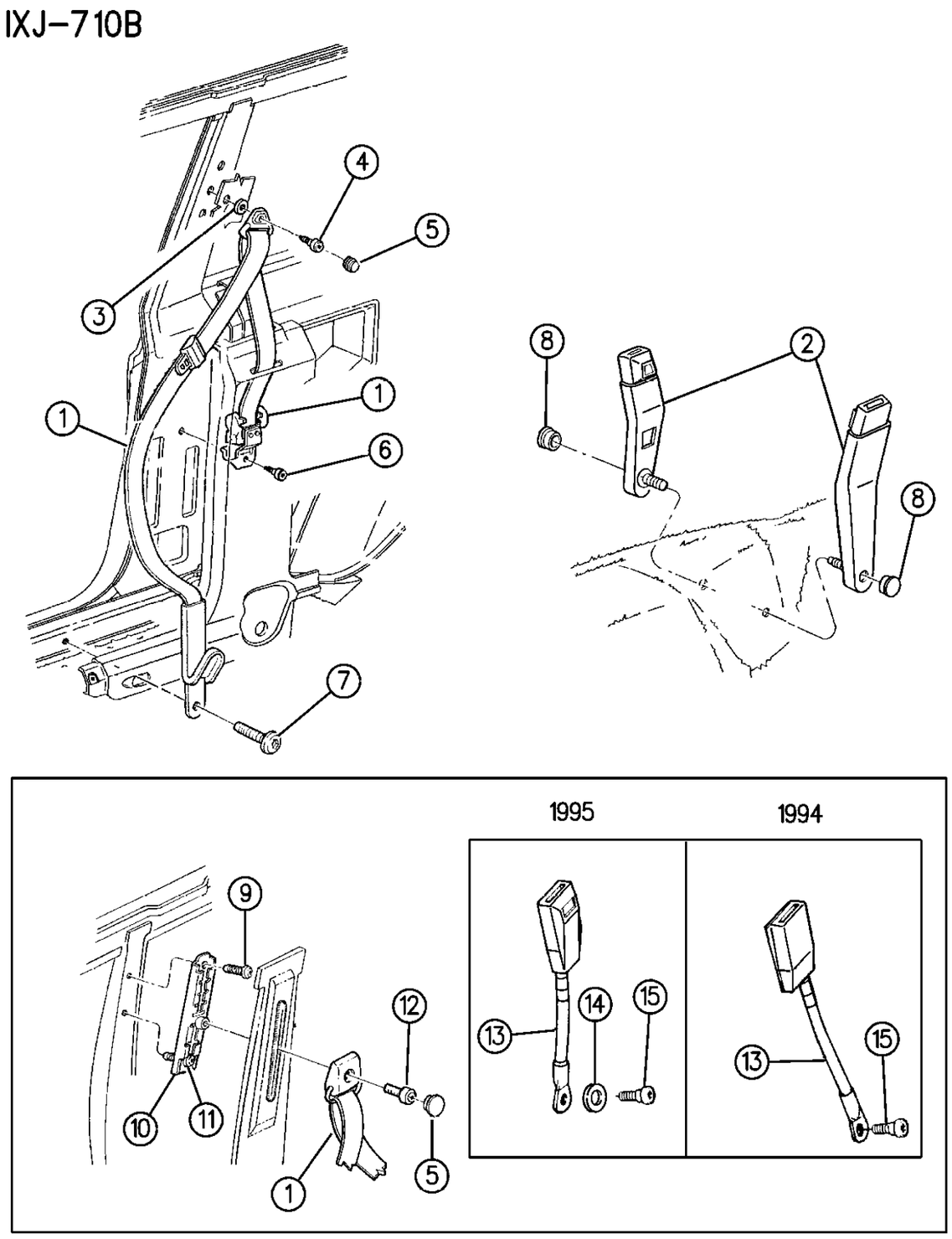

ITEM	PART NUMBER	QTY	BODY	MODEL	DESCRIPTION
	F877 PA8	2			Charcoal
	F877 PY6	2			Sand
					Round, (As Pictured), 1994,95 Only
	5AB9 6JY6	2			Sand, 1994,95
	5AB9 6HA8	2			Charcoal, 1994
	5AB9 6KS1	2			Charcoal, 1995
6	6034 450	2			SCREW, .437-20x2.00
7	6034 398	2			SCREW, .437-20x1.975
8					PLUG, Button
	5AB2 2PX9	2			Black
	5AB2 2JA8	2			Dark Charcoal
	5AB2 2JY6	2			Dark Sand
	5AB2 2RAZ	2			Agate, 1995,96
9	6034 384	2			SCREW, .437-20x1.150
10	5531 4697	2			ADJUSTER, Turning Loop
11	6502 985	2			SCREW, M10x1.50x30.00, (Included In Adjuster)
12	6034 457	2			BOLT, 7/16-20x1.37
13					BELT, Inner Buckle
	5531 4745	2			1994
	5531 4868-9	1			1995
	5531 4868-9	1			1996, w/Power
	5521 7188-9	1			1996, w/o Power
For vehicles w/traveling inboard buckle, built for Austria, see Illustration # 730. e Adhesive #312.					
14	4798 898	2			WASHER
15					BOLT, Buckle Half Mounting
	6034 394	2			1994
	6035 115	2			1995,96
-					EXTENDER, Seat Belt
	8350 5482	1			1994,95, Up to 2-21-95
	4740 415	1			1995,96, After 2-21-95

MODEL CODES:

72=2 DR Wagon
74=4 DR Wagon
77=Open Body 93" Whlbase
78=Open Body 103" Whlbase - Export
T=2WD
J,N=4WD
U=4WD (RHD)

BODY STYLES:

YJ=Wrangler (4X4) "S"
Weangler (4X4) SE
Wrangler (4X4) Sahara
Wrangler (4X4) Renegade
XJ=Cherokee SE
Cherokee Sport
Cherokee Country
ZJ=Grand Cherokee SE
Grand Cherokee Laredo
Grand Cherolee Limited
ZG=Grand Cherokee European
Y1=Wrangler
X1=Cherokee
Z1=Grand Cherokee
KDX=Vehicles

AR = Use as Required - = Non Illustrated Part P.A.R. = Paint as Required

SEAT BELTS, FRONT SEAT CHEROKEE 4 DOOR
Figure IXJ-720

IXJ-720B

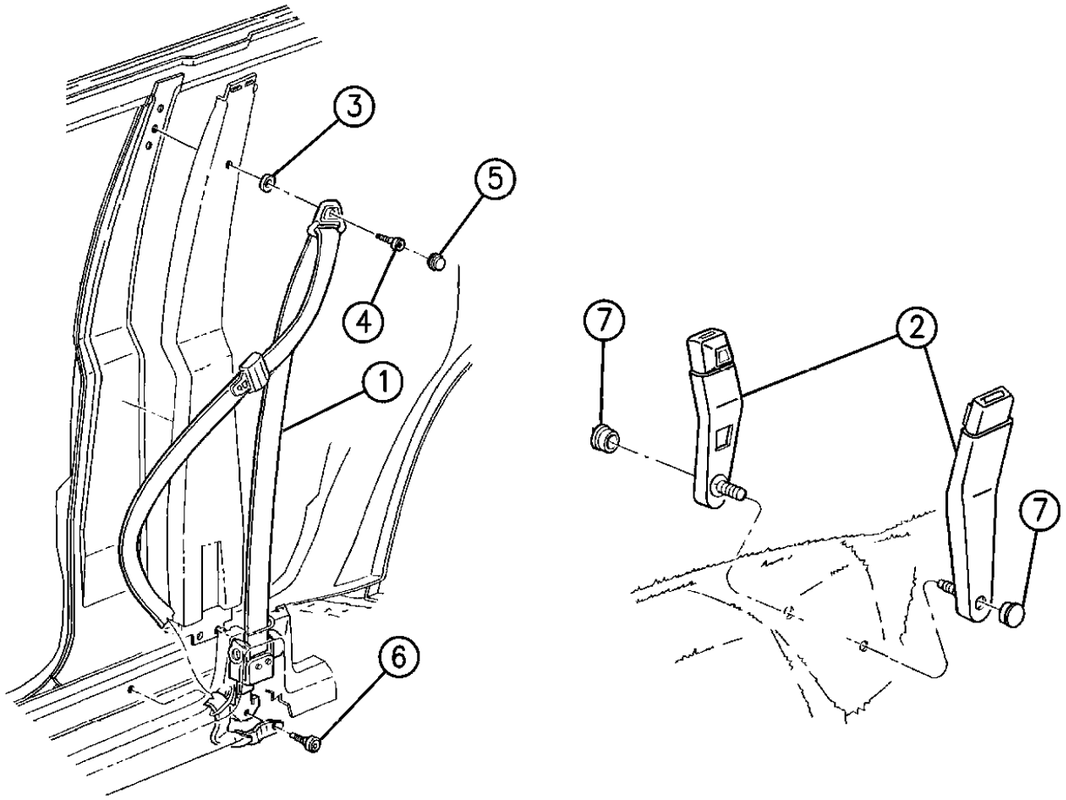

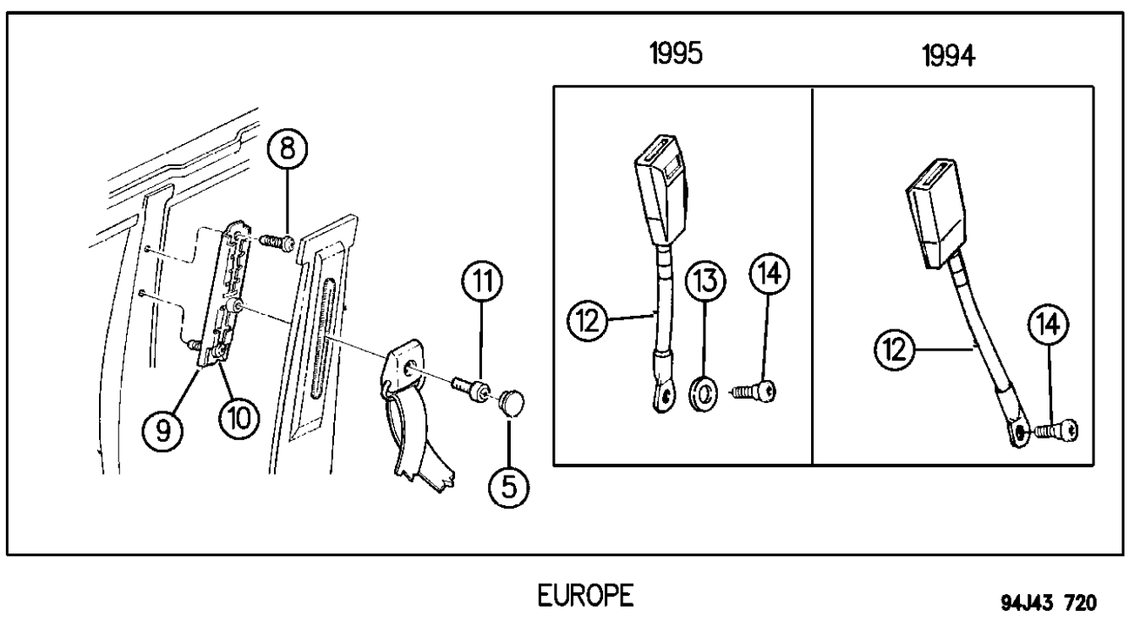

ITEM	PART NUMBER	QTY	BODY	MODEL	DESCRIPTION
1					BELT, Retractor Assembly
					Label # 55314752-3
					1994
	5DN86-7 PA8	1			Charcoal
	5DN86-7 PY6	1			Sand
					Label # 55216962-3
					1995, Up to 2-21-95
	5ER70-1 RAZ	1			Agate
	5ER70-1 RK5	1			Taupe
					Label # 55217024-5
					1995, After 2-21-95
	5ES48-9 RAZ	1			Agate
	5ES48-9 RK5	1			Taupe
					Label # 55217150-1, 55217450-1, 55217452-3
					1996
	5FM18-9 SAZ	1			Agate
	5FM18-9 SK5	1			Tan
					Black, EUROPE, KDX
	5DN80-1 PX9	1			1994, Label # 55314746-7
	5521 6964-5	1			1995
	5521 7142-3	1			1996
2					BELT, Buckle Half, Inboard, Except EUROPE
					Label # 55314572-3
					1994
	5CR94-5 LA8	1			Charcoal
	5CR94-5 LY6	1			Sand
					Label # 55314572-3
					1995, Up to 2-21-95
	5CR94-5 RAZ	1			Agate
	5CR94-5 RK5	1			Taupe
					Label # 55216958-9
					1995,96, After 2-21-95
	5ER66-7 RAZ	1			Agate
	5ER66-7 RK5	1			Taupe
3	J400 7315	2			WASHER
4	6034 394	2			SCREW, Tapping, .171x15x.875
5					COVER, BOLT
					Triangular, Turning Loop Cover, 1994
	F877 PA8	2			Charcoal
	F877 PY6	2			Sand
					Round, (As Pictured), 1994,95
	5AB9 6JY6	2			Sand, 1994,95

MODEL CODES:

72=2 DR Wagon
74=4 DR Wagon
77=Open Body 93" Whlbase
78=Open Body 103" Whlbase - Export
T=2WD
J,N=4WD
U=4WD (RHD)

BODY STYLES:

YJ=Wrangler (4X4) "S"
Weangler (4X4) SE
Wrangler (4X4) Sahara
Wrangler (4X4) Renegade
XJ=Cherokee SE
Cherokee Sport
Cherokee Country
ZJ=Grand Cherokee SE
Grand Cherokee Laredo
Grand Cherolee Limited
ZG=Grand Cherokee European
Y1=Wrangler
X1=Cherokee
Z1=Grand Cherokee
KDX=Vehicles

AR = Use as Required - = Non Illustrated Part P.A.R. = Paint as Required

SEAT BELTS, FRONT SEAT CHEROKEE 4 DOOR
Figure IXJ-720

IXJ-720B

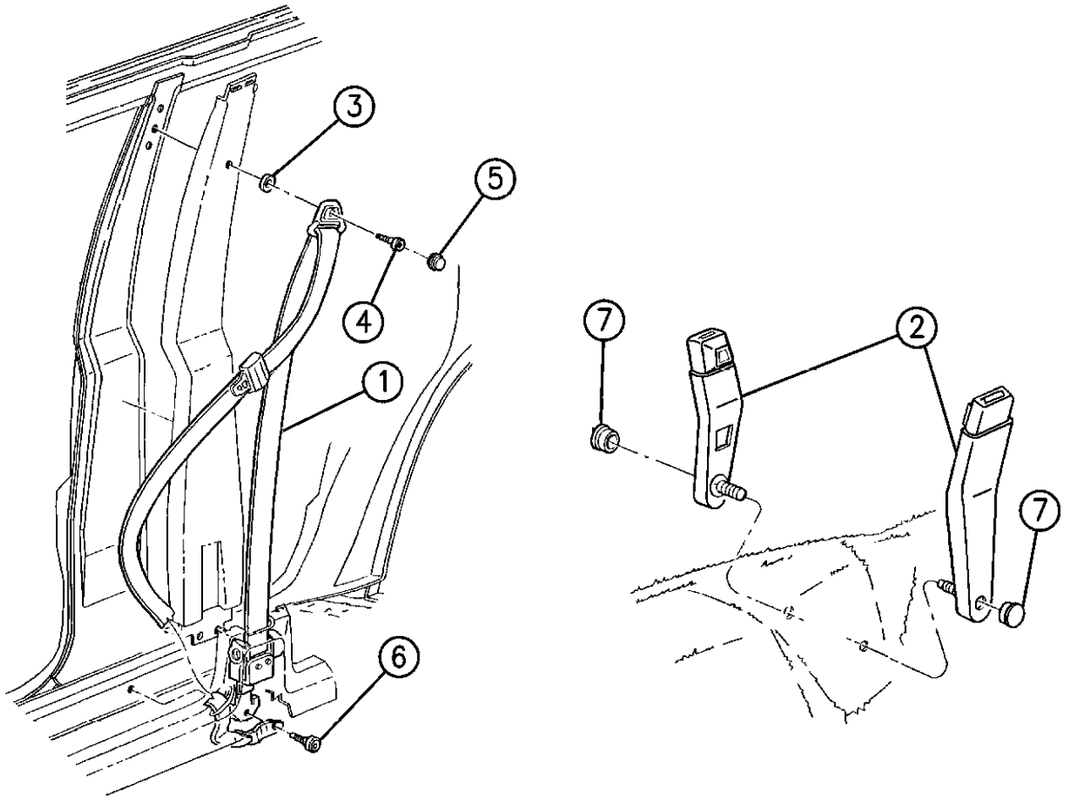

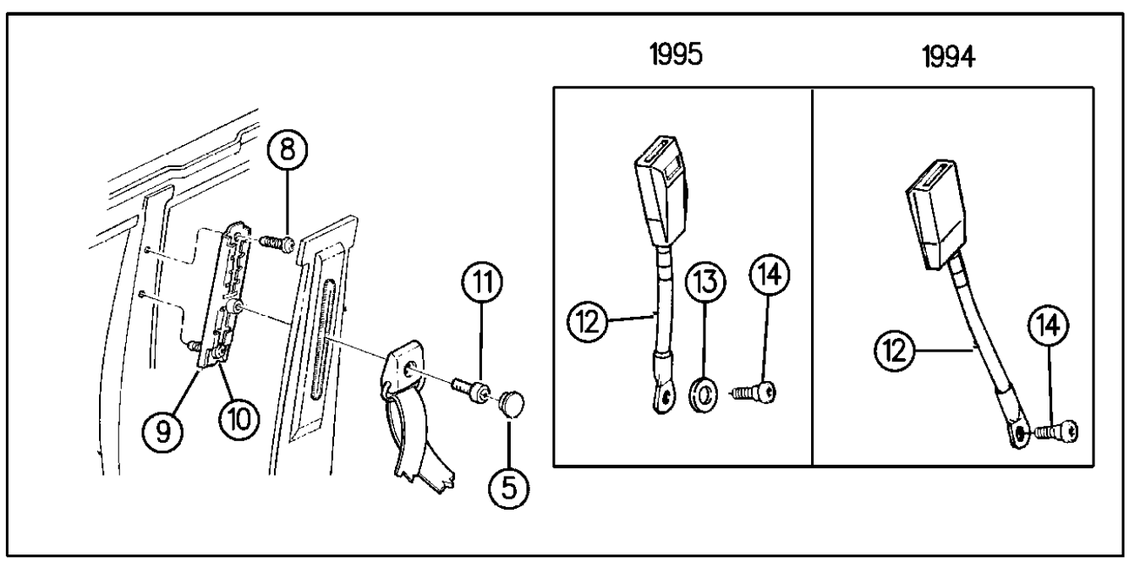

EUROPE

94J43 720

ITEM	PART NUMBER	QTY	BODY	MODEL	DESCRIPTION
	5AB9 6HA8	2			Charcoal, 1994
	5AB9 6KS1	2			Charcoal, 1995
6	6034 450	2			SCREW, .437-20x1.20
7					PLUG, Button
	5AB2 2PX9	2			Black
	5AB2 2JA8	2			Charcoal
	5AB2 2JY6	2			Dark Sand
	5AB2 2RAZ	2			Agate, 1995,96
8	6034 384	2			SCREW, .437-20x.150
9	5531 4697	2			ADJUSTER, Turning Loop
10	6502 985	2			SCREW, M10x1.50x30.00, (Included In Adjuster)
11	6034 457	2			BOLT, 7/16-201.37
12					BELT, Inner Buckle
	5531 4745	2			1994
	5531 4868-9	1			1995
	5531 4868-9	1			1996, w/Power
	5521 7188-9	1			1996, w/o Power
For vehicles w/traveling inboard buckles, built in Austria, see Illustration # 730. e Adhesive #312.					
13	4798 898	2			WASHER
14					BOLT, Buckle Half Mounting
	6034 394	2			1994
	6035 115	2			1995,96
-					EXTENDER, Seat Belt
	8350 5482	1			1994-95, Up to 2-21-95
	4740 415	1			1995,96, After 2-21-95

MODEL CODES:

72=2 DR Wagon
74=4 DR Wagon
77=Open Body 93" Whlbase
78=Open Body 103" Whlbase - Export
T=2WD
J,N=4WD
U=4WD (RHD)

BODY STYLES:

YJ=Wrangler (4X4) "S"
Weangler (4X4) SE
Wrangler (4X4) Sahara
Wrangler (4X4) Renegade
XJ=Cherokee SE
Cherokee Sport
Cherokee Country
ZJ=Grand Cherokee SE
Grand Cherokee Laredo
Grand Cherolee Limited
ZG=Grand Cherokee European
Y1=Wrangler
X1=Cherokee
Z1=Grand Cherokee
KDX=Vehicles

AR = Use as Required - = Non Illustrated Part P.A.R. = Paint as Required

SEAT BELTS, FRONT, W/TRAVELLING INBOARD BUCKLE EUROPE-AUSTRIA CHEROKEE
Figure IXJ-730

IXJ–730

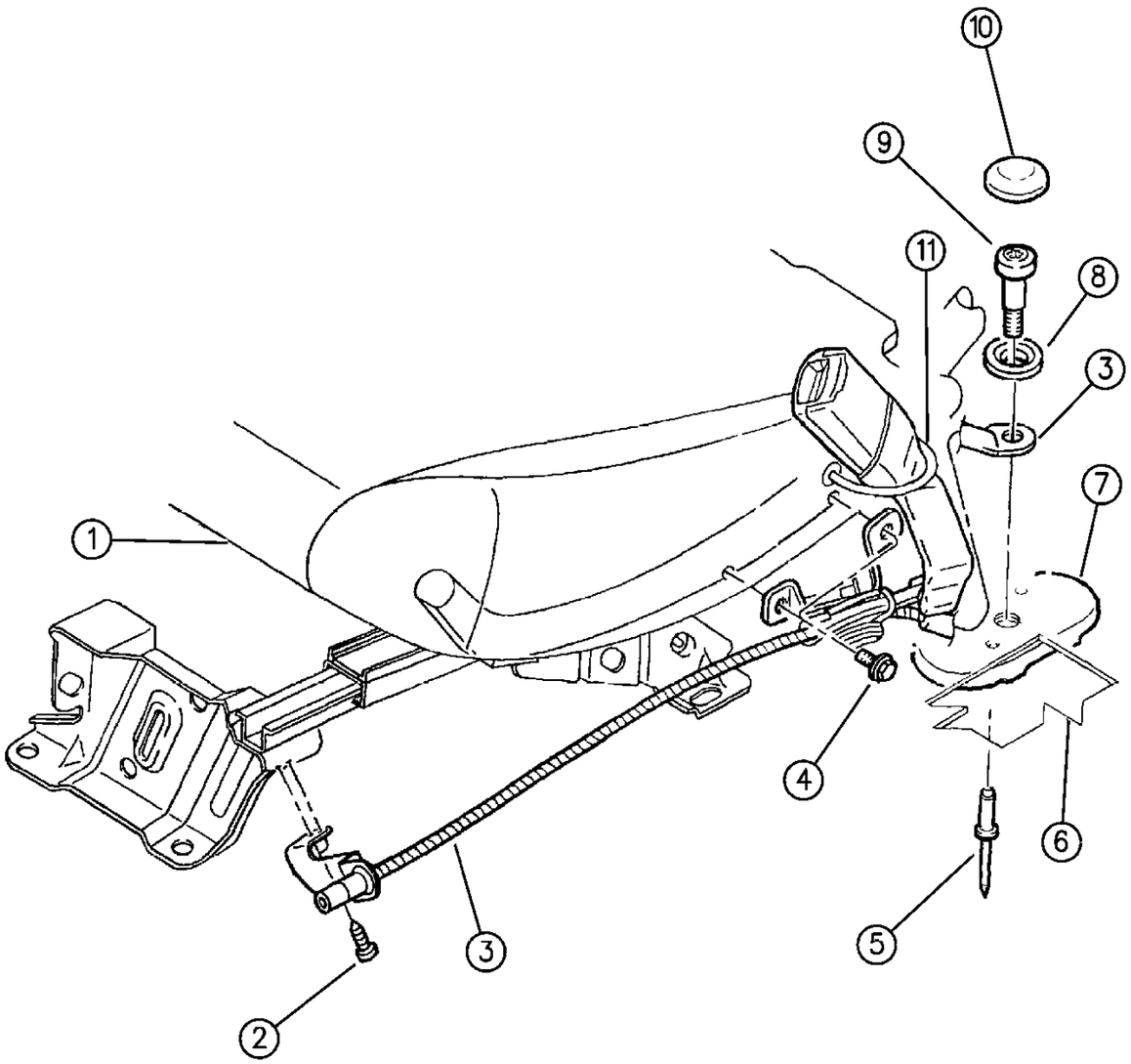

94J43 730

ITEM	PART NUMBER	QTY	BODY	MODEL	DESCRIPTION
NOTE: This illustration only represents the traveling inboard buckle used in Austria. Also see illustration 710 and 720 for other seat belt parts. e Adhesive #312.					
1					SEAT ASSEMBLY, (reference) ***
2		4			SCREW, (not serviced, use .164-18x.625)
3	5CM78-9 LX9	1			BUCKLE ASSEMBLY, Traveling Front Inner ***
4	3420 1611	4			SCREW, Travel Lock Bracket to Seat
-	6035 116	1			WASHER, Travel Lock Bracket
5	6033 688	4			RIVET, (under floor pan reinforcement attaching)
6					BODY, (reference) ***
7		2			BRACKET, (seat belt anchor under floor pan - not serviced)
8	J400 7264	2			WASHER, Travel Cable Anchor Bolt
-	J400 7264	2			WASHER, Unused Hole in Floor Pan Bolt
9	J400 6366	1			BOLT, Travel Cable Anchor
-	J400 7337	2			BOLT, Plug Unused Hole in Floor Pan
10	J400 7263	2			CAP, Travel Cable Anchor Bolt
-	J400 7263	2			CAP, Bolt/Plug Unused Hole in Floor Pan
11					STRAP, Elastic (not required for service)

MODEL CODES:

72=2 DR Wagon
74=4 DR Wagon
77=Open Body 93" Whlbase
78=Open Body 103" Whlbase - Export
T=2WD
J,N=4WD
U=4WD (RHD)

BODY STYLES:

YJ=Wrangler (4X4) "S"
Weangler (4X4) SE
Wrangler (4X4) Sahara
Wrangler (4X4) Renegade
XJ=Cherokee SE
Cherokee Sport
Cherokee Country
ZJ=Grand Cherokee SE
Grand Cherokee Laredo
Grand Cherolee Limited
ZG=Grand Cherokee European
Y1=Wrangler
X1=Cherokee
Z1=Grand Cherokee
KDX=Vehicles

AR = Use as Required - = Non Illustrated Part P.A.R. = Paint as Required

SEATBELTS, REAR SEAT CHEROKEE
Figure IXJ-740

IXJ–740

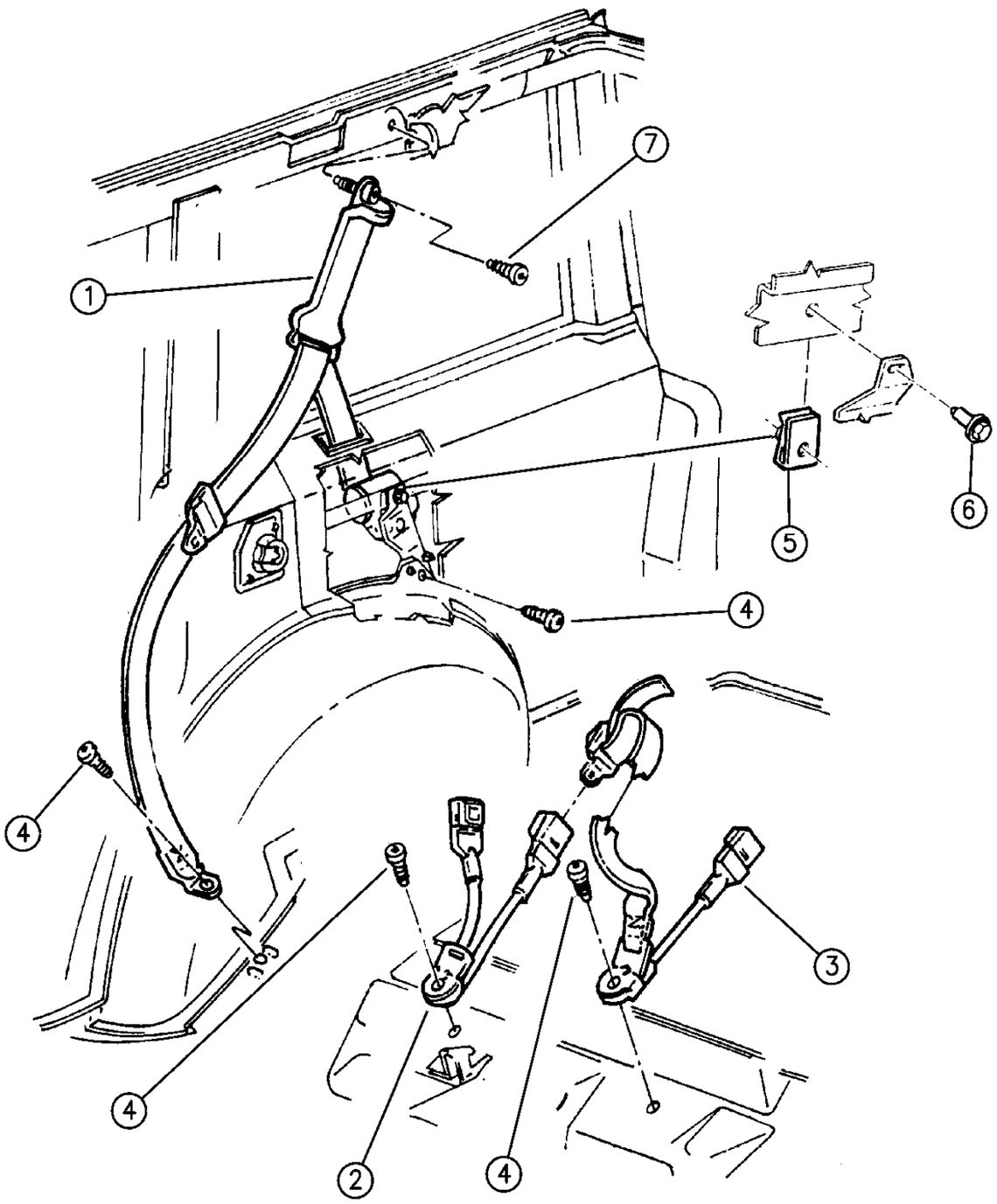

ITEM	PART NUMBER	QTY	BODY	MODEL	DESCRIPTION
1					BELT, Retractor and Belt Assembly
					1994, Label # 55314660-1
	5DA34-5 PA8	1			Charcoal
	5DA34-5 PY6	1			Sand
					1995, Up to 11-14-94, Label # 55314892-3
	5EG44-5 RAZ	1			Agate
	5EG44-5 RK5	1			Dark Taupe
					1995, After 11-14-94, Label # 55314922-3
	5EN84-5 RAZ	1			Agate
	5EN84-5 RK5	1			Dark Taupe
					1996, Up to 4-19-96, Label # 55217148-9
	5EZ16-7 RAZ	1			Agate
	5EZ16-7 RK5	1			Tan
					1996, After 4-19-96, Label 55217240-1
					Right
	5FG5 2SAZ	1			Agate
	5FG5 2SK5	1			Tan
					Left
	5FG5 3SAZ	1			Agate
	5FG5 3SK5	1			Tan
					EUROPE, Black
	5DA38-9 PX9	1			1994, Label # 55314664-5
	5531 4890-1	1			1995
	5521 7146-7	1			1996
2					BELT, Buckle Assembly, Inner Right
					Label # 55314738
					1994
	5DN7 4PA8	1			Charcoal
	5DN7 4PY6	1			Sand
					1995,96, Up to 4-19-96
	5DN7 4RAZ	1			Agate
	5DN7 4RK5	1			Dark Taupe
					Label #55217238
					1996, After 4-19-96
	5FG5 0SAZ	1			Agate
	5FG5 0SK5	1			Tan
					EUROPE, Black
					Label #55314742
	5DN7 8PX9	1			1994
	5531 4864	1			1995,96
3					BELT, Belt and Buckle Assembly, Inner Left
					Label Number 55314739

MODEL CODES:

72=2 DR Wagon
74=4 DR Wagon
77=Open Body 93" Whlbase
78=Open Body 103" Whlbase - Export
T=2WD
J,N=4WD
U=4WD (RHD)

BODY STYLES:

YJ=Wrangler (4X4) "S"
Weangler (4X4) SE
Wrangler (4X4) Sahara
Wrangler (4X4) Renegade
XJ=Cherokee SE
Cherokee Sport
Cherokee Country
ZJ=Grand Cherokee SE
Grand Cherokee Laredo
Grand Cherolee Limited
ZG=Grand Cherokee European
Y1=Wrangler
X1=Cherokee
Z1=Grand Cherokee
KDX=Vehicles

AR = Use as Required - = Non Illustrated Part P.A.R. = Paint as Required

SEATBELTS, REAR SEAT CHEROKEE
Figure IXJ-740

IXJ–740

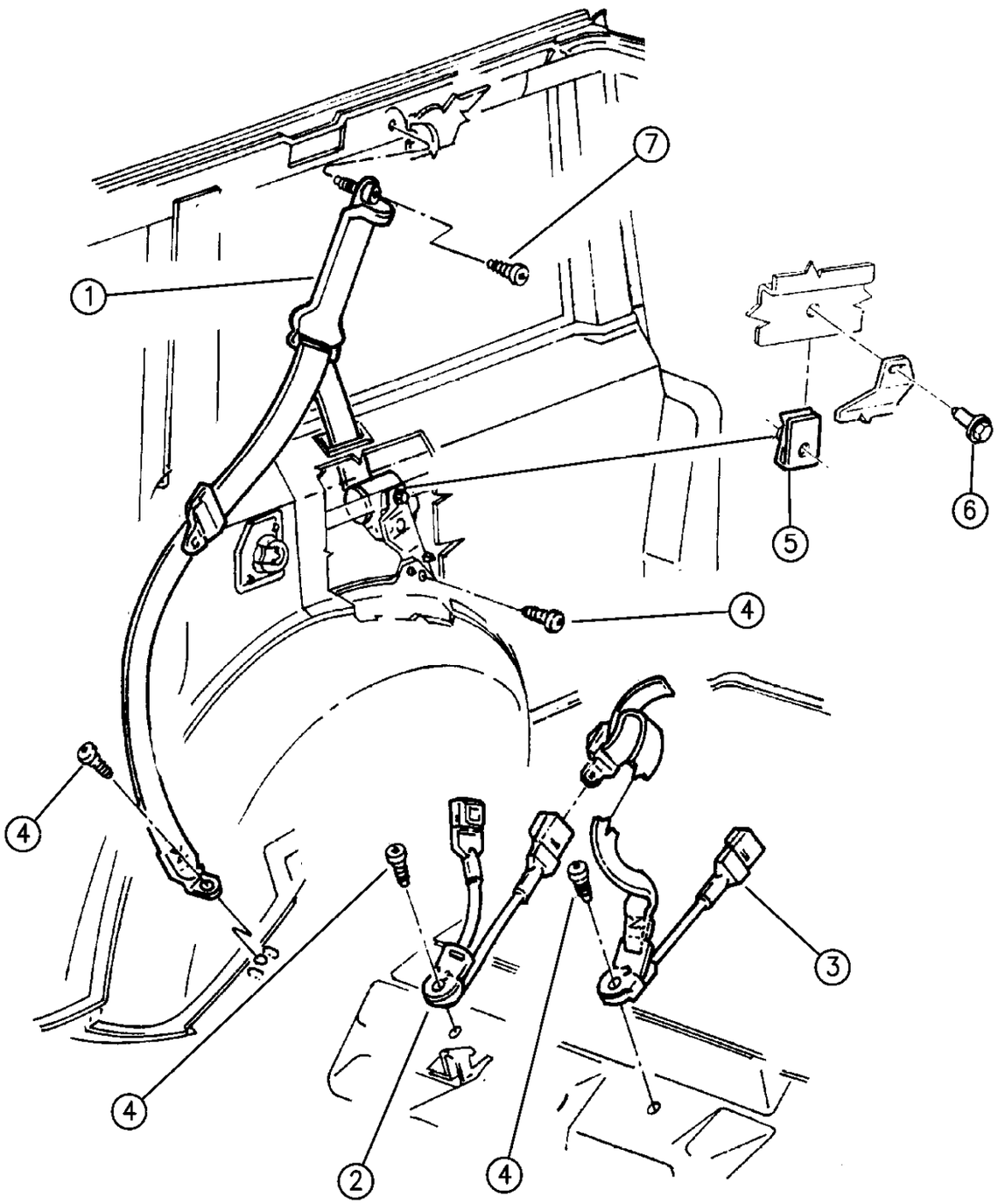

ITEM	PART NUMBER	QTY	BODY	MODEL	DESCRIPTION
					1994
	5DN7 5PA8	1			Charcoal
	5DN7 5PY6	1			Sand
					1995,96, Up to 4-19-96
	5DN7 5RAZ	1			Agate
	5DN7 5RK5	1			Dark Taupe
					Label #55217239
					1996, After 4-19-96
	5FG5 1SAZ	1			Agate
	5FG5 1SK5	1			Tan
					EUROPE, Black
					Label # 55314743
	5DN7 9PX9	1			1994
	5531 4865	1			1995,96
4	6034 450	AR			SCREW, .437-20x2.00
5	1150 3714	2			NUT, U-Type
6	3420 2205	2			SCREW
7	6034 389	2			BOLT, Shoulder, 7/16-20x1.87, (also included in Item #1)
	5003 422AB	AR			TEATHER, Child Restraint ***

NOTE: Escutcheon For Rear Seat Belt Is Part Of Seat Belt e Adhesive #312.

MODEL CODES:

72=2 DR Wagon
74=4 DR Wagon
77=Open Body 93" Whlbase
78=Open Body 103" Whlbase - Export
T=2WD
J,N=4WD
U=4WD (RHD)

BODY STYLES:

YJ=Wrangler (4X4) "S"
Weangler (4X4) SE
Wrangler (4X4) Sahara
Wrangler (4X4) Renegade
XJ=Cherokee SE
Cherokee Sport
Cherokee Country
ZJ=Grand Cherokee SE
Grand Cherokee Laredo
Grand Cherolee Limited
ZG=Grand Cherokee European
Y1=Wrangler
X1=Cherokee
Z1=Grand Cherokee
KDX=Vehicles

AR = Use as Required - = Non Illustrated Part P.A.R. = Paint as Required

TRACKS, LESS POWER SEATS BUCKET SEAT CHEROKEE 1994
Figure IXJ-810

IXJ-810A

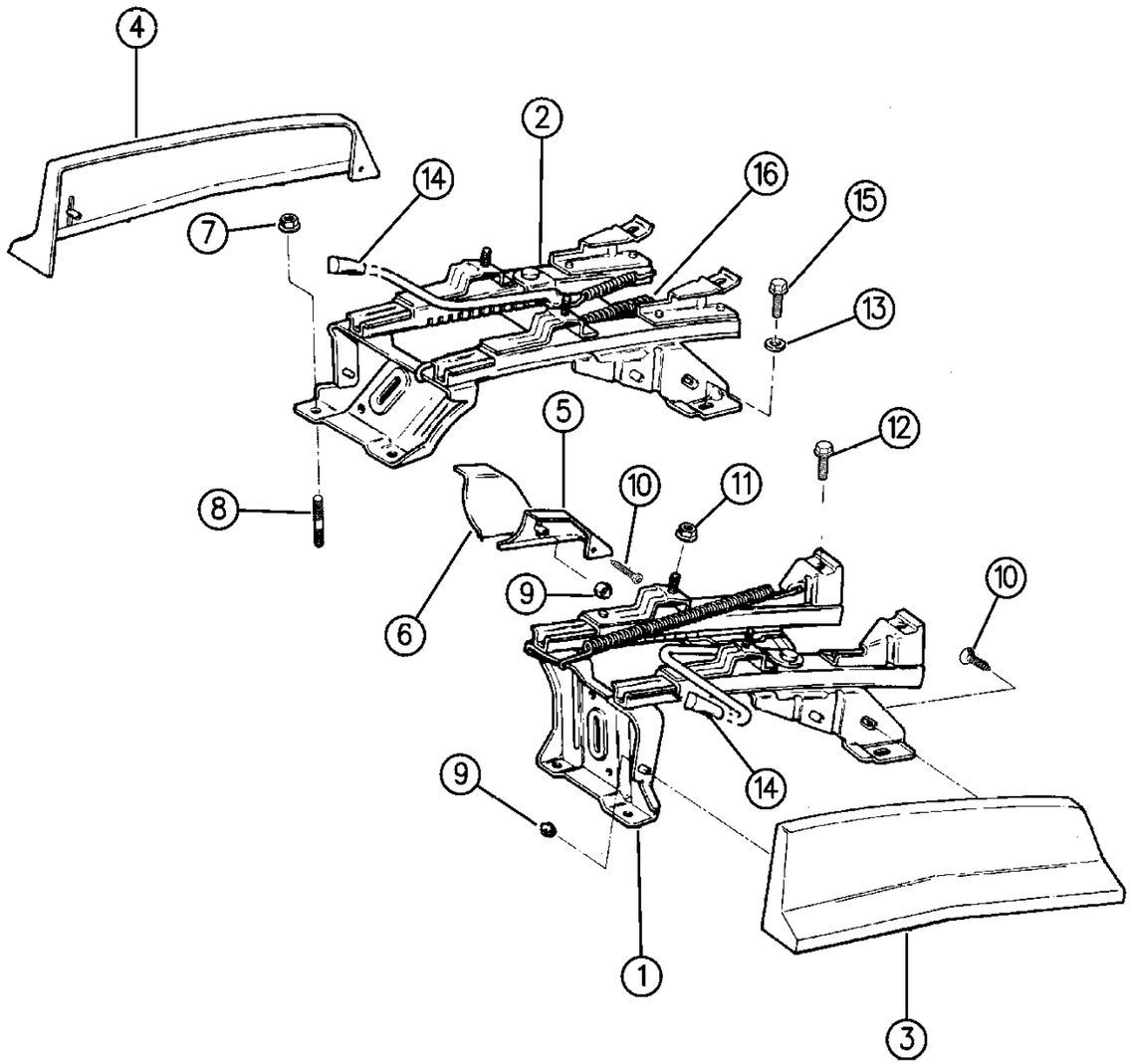

94J43 810

ITEM	PART NUMBER	QTY	BODY	MODEL	DESCRIPTION
1					TRACK, Seat, Left
	5519 5843	1			Except, EXPORT - Austria
	5519 5945	1			EXPORT - Austria, (must have traveling inboard buckle seat belts)
	5519 5847	1			w/Police Package, Heavy Duty
-	J545 5277	2			SPACER, Seat Track Mounting, KDX - Venezuela
2					TRACK, Seat, Right
	5519 5842	1			Except Export - Austria
	5519 5944	1			EXPORT - Austria, (must have traveling inboard buckle seat belts)
	5519 5846	1			w/Police Package, Heavy Duty
-	J545 5277	2			SPACER, Seat track Mounting, KDX - Venezuela
3-4					COVER, Track
	5AC20-1 JA8	1			Dark Charcoal
	5AC20-1 JY6	1			Dark Sand
5					COVER, Track, Inner Right
	4637 042	1			Dark Charcoal
	4637 043	1			Dark Sand
6					COVER, Track, Inner Left
	4637 039	1			Dark Charcoal
	4637 040	1			Dark Sand
7	1150 2811	4			NUT
8	3420 2209	4			STUD
9	J400 0235	4			NUT, Push
10					Fastener, Track Cover ***
	J400 2461	AR			SCREW
	3420 2138	8			FASTENER, KDX - Venezuela
11	6101 467	4			NUT
12	1150 4735	4			BOLT
13	1150 0323	4			WASHER
14	8350 1412	2			KNOB, Seat Latch
15	3420 1888	4			SCREW
16	5519 5865	1			SPRING, Latch Lever Return

MODEL CODES:

72=2 DR Wagon
74=4 DR Wagon
77=Open Body 93" Whlbase
78=Open Body 103" Whlbase - Export
T=2WD
J,N=4WD
U=4WD (RHD)

BODY STYLES:

YJ=Wrangler (4X4) "S"
Weangler (4X4) SE
Wrangler (4X4) Sahara
Wrangler (4X4) Renegade
XJ=Cherokee SE
Cherokee Sport
Cherokee Country
ZJ=Grand Cherokee SE
Grand Cherokee Laredo
Grand Cherolee Limited
ZG=Grand Cherokee European
Y1=Wrangler
X1=Cherokee
Z1=Grand Cherokee
KDX=Vehicles

AR = Use as Required - = Non Illustrated Part P.A.R. = Paint as Required

« RETURN TO GROUP INDEX

TRACKS, WITH POWER SEATS BUCKET SEAT CHEROKEE 1994
Figure IXJ-820

IXJ–820

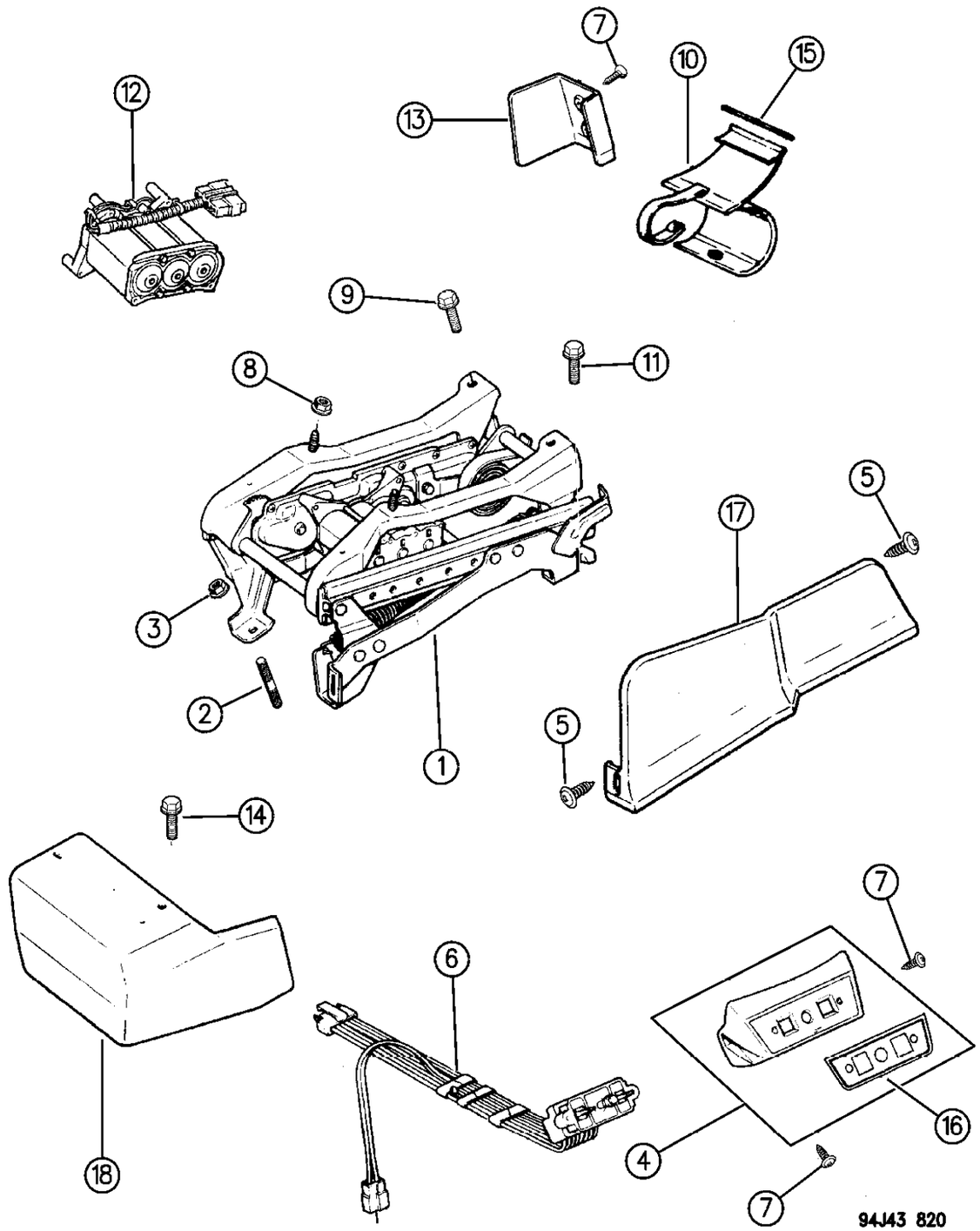

ITEM	PART NUMBER	QTY	BODY	MODEL	DESCRIPTION
1	5519 5320-1	1			TRACK, Power Seat
2	3420 2209	8			STUD
3	1150 2811	8			NUT
4		1			BEZEL AND OVERLAY ASSEMBLY ***
	5AD34-5 JA8	1			Dark Charcoal
	5AD34-5 KY6	1			Dark Sand
NOTE: As stock is exhausted in colors primed parts are to be used for service. e Adhesive #312.					
	5500 4510-1	1			Primed, P.A.R. (does not include item 16)
5	J400 2461	AR			SCREW
6	5601 6948-9	1			SWITCH ASSEMBLY, Power Seat ***
7		4			SCREW, (not serviced, use M4x0.7x16)
8	1150 2729	4			NUT
9	1150 4735	4			BOLT
10					COVER, Carpet
	5AD54-5 JA8	1			Charcoal
	5AD54-5 JY6	1			Dark Sand
11	3420 1888	2			SCREW
12	5600 6286	2			MOTOR, Power Seat
13					COVER, Track Inner, P.A.R.
	5AD1 0JY6	1			Right Seat, Inboard
	5AD1 1JY6	1			Left Seat, Inboard
14	3420 1314	4			SCREW
15	5500 3346	2			WIRE, Cover
16	5500 6716	2			OVERLAY, Black ***
17	5AD06-7 JY6	1			COVER, Track, Outer Lower, P.A.R.
18					COVER, Track, Outer Upper, P.A.R.
	5AD5 8JY6	1			Right
	5AD0 9JY6	1			Left

MODEL CODES:

72=2 DR Wagon
74=4 DR Wagon
77=Open Body 93" Whlbase
78=Open Body 103" Whlbase - Export
T=2WD
J,N=4WD
U=4WD (RHD)

BODY STYLES:

YJ=Wrangler (4X4) "S"
Weangler (4X4) SE
Wrangler (4X4) Sahara
Wrangler (4X4) Renegade
XJ=Cherokee SE
Cherokee Sport
Cherokee Country
ZJ=Grand Cherokee SE
Grand Cherokee Laredo
Grand Cherolee Limited
ZG=Grand Cherokee European
Y1=Wrangler
X1=Cherokee
Z1=Grand Cherokee
KDX=Vehicles

AR = Use as Required - = Non Illustrated Part P.A.R. = Paint as Required

« RETURN TO GROUP INDEX

RECLINER AND ADJUSTER FRONT SEAT XJ, 1995-96
Figure IXJ-830

IXJ-830C

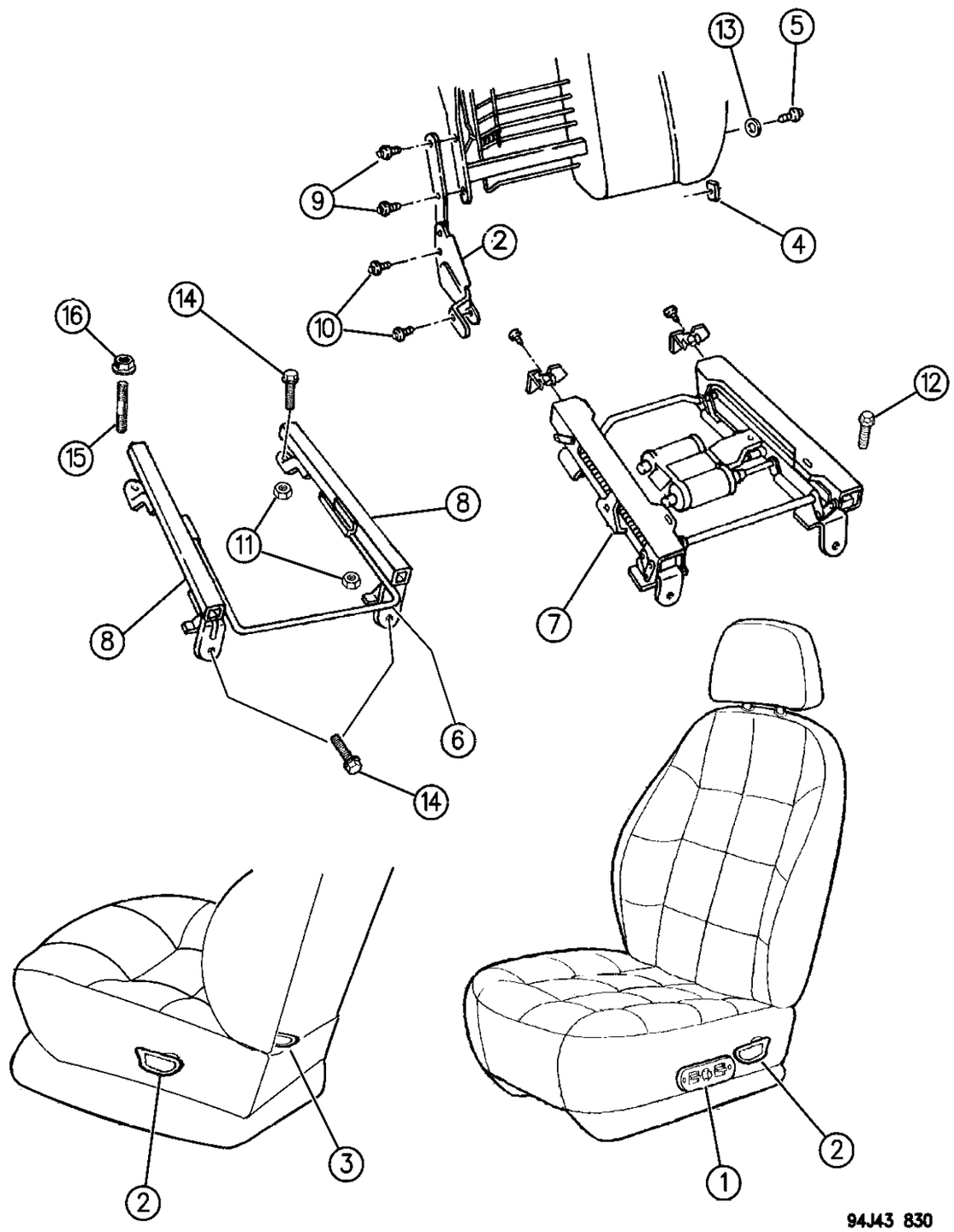

ITEM	PART NUMBER	QTY	BODY	MODEL	DESCRIPTION
1					BEZEL, Power Seat Switch
	MR48-9 RS1	1			Charcoal
	MR48-9 RY6	1			Sand
	4373 666	1			SWITCH ASSY. ***
	4796 790	2			BRACKET, Outer Bezel Attach
2					RECLINER
	4796 712-3	1		72	Two Door
	4796 714-5	1		74	Four Door
3	4796 720	2		72	KNOB, Recliner Fold Down
4	4713 982	2			NUT, 'U' Type, Pivot Bolt
5	4797 554	2			BOLT, Pivot Back to Cushion
6	4796 780	1			HANDLE, Adjuster, Manual
7					ADJUSTER, Power
	4796 782	1			Driver
	4796 796	1			Driver, EXPORT, Passenger for R.H.D.
	4796 783	1			Passenger, T.I.B., EXPORT, Driver for R.H.D.
8					ADJUSTER, Manual
	4796 775	1			Driver, Inboard
	4796 774	1			Driver, Outboard
	4796 795	1			Driver,T.I.B., EXPORT
	4796 777	1			Passenger, Inboard
	4796 776	1			Passenger, Outboard
	4796 794	1			Passenger, T.I.B., EXPORT
9	4720 768	4			BOLT, Recliner to Back
10	4796 793	4			BOLT, Recliner to Cushion
11	6101 467	AR			NUT, Cushion to Adjuster
12	6503 849	6			SCREW, Front Seat to Floor
13	4796 792	2			WASHER, Black, Pivot Bolt
14	6504 071	3			SCREW, Front Seat to Floor, M8x1.25x35.00
15		2			STUD, Weld, Not Serviced
16	0152 477	1			NUT, Seat Riser to Floor

MODEL CODES:

72=2 DR Wagon
74=4 DR Wagon
77=Open Body 93" Whlbase
78=Open Body 103" Whlbase - Export
T=2WD
J,N=4WD
U=4WD (RHD)

BODY STYLES:

YJ=Wrangler (4X4) "S"
Weangler (4X4) SE
Wrangler (4X4) Sahara
Wrangler (4X4) Renegade

XJ=Cherokee SE
Cherokee Sport
Cherokee Country

ZJ=Grand Cherokee SE
Grand Cherokee Laredo
Grand Cherolee Limited
ZG=Grand Cherokee European

Y1=Wrangler
X1=Cherokee
Z1=Grand Cherokee
KDX=Vehicles

AR = Use as Required - = Non Illustrated Part P.A.R. = Paint as Required

« RETURN TO GROUP INDEX

SAGIPARTS

INTERIOR TRIM GROUP CONTENT IZJ GRAND CHEROKEE

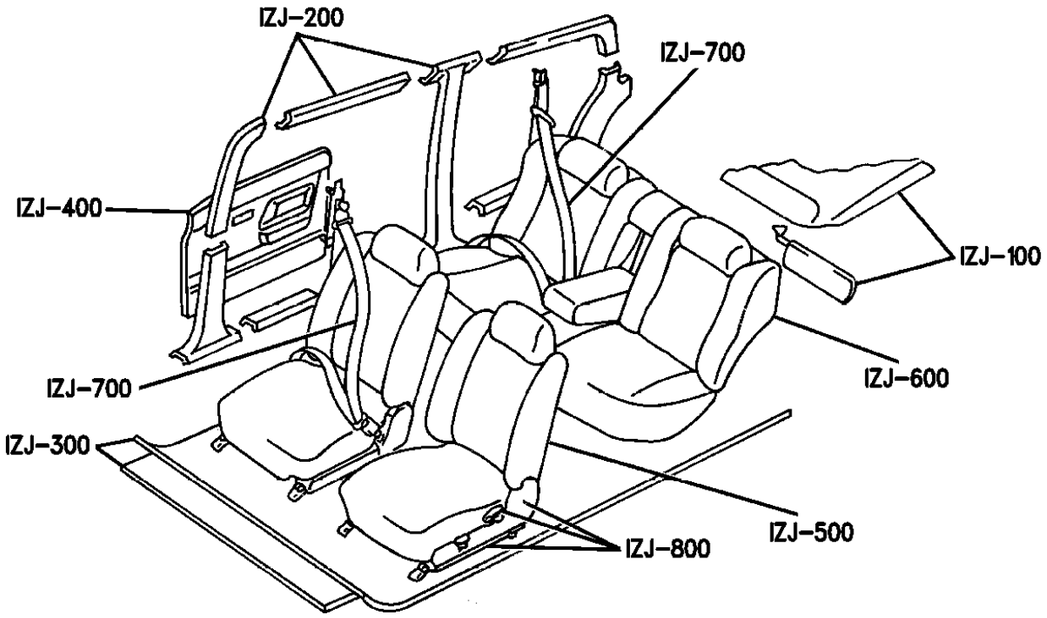

IZJ–100 HEADLINNING & VISORS 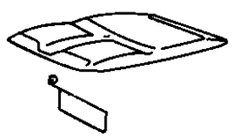	IZJ–200 PANEL,MLDS. SCUFF PLATE 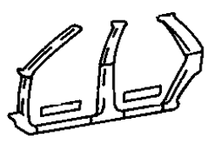	IZJ–300 CARPET,MAT & INSULATION 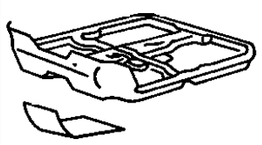	IZJ–300 FLOOR MAT & TONNEAU COVER 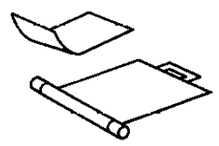
IZJ–400 DOOR TRIM FRONT & REAR 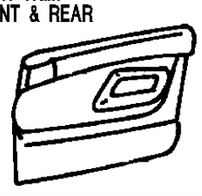	IZJ–500 FRONT SEAT	IZJ–600 REAR SEAT 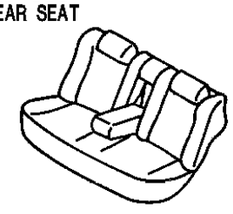	IZJ–700 SEAT BELT FRT. & REAR 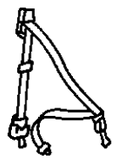
IZJ–800 ADJ. SHIELDS & RECLINER 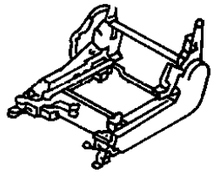	IZJ–900 STORAGE COMPARTMENT	IZJ–1000 LIFTGATE PANELS	

GROUP IZJ - INTERIOR TRIM GRAND CHEROKEE

ILLUSTRATION TITLE — **GROUP-FIG. NO.**

TRIM CODES DEFINED

TRIM CODES DEFINED GRAND CHEROKEE . . . . . Fig. IZJ-99

HEADLINER, ASSIST STRAPS AND SUNVISORS

HEADLINER AND ASSIST HANDLES - GRAND CHEROKEE AND GRAND WAGONEER - ZJ . . . . . Fig. IZJ-120

SUNVISORS - GRAND CHEROKEE AND GRAND WAGONEER - ZJ . . . . . Fig. IZJ-125

INTERIOR TRIM PANELS AND GARNISH MOULDINGS

INTERIOR TRIM PANELS AND GARNISH MOULDINGS - GRAND CHEROKEE AND GRAND WAGONEER - ZJ . . . . . Fig. IZJ-210

CARPET, INSULATION AND CARGO COVER

CARPET - GRAND CHEROKEE AND GRAND WAGONEER - ZJ . . . . . Fig. IZJ-310

INSULATION - GRAND CHEROKEE AND GRAND WAGONEER - ZJ . . . . . Fig. IZJ-320

CARGO COVER AND CARGO LOOPS - GRAND CHEROKEE AND GRAND WAGONEER - ZJ . . . . . Fig. IZJ-330

DOOR TRIM PANELS

PANELS, DOOR TRIM - GRAND CHEROKEE AND GRAND WAGONEER - ZJ . . . . . Fig. IZJ-410

FRONT SEAT ASSEMBLIES AND COVERS

SEAT COVERS AND SEAT ASSEMBLIES - FRONT SEAT -1994-95 GRAND CHEROKEE AND GRAND WAGONEER - ZJ . . . . . Fig. IZJ-510

SEAT COVERS AND SEAT ASSEMBLIES FRONT SEAT GRAND CHEROKEE - 1996 ZJ . . . . . Fig. IZJ-520

REAR SEAT ASSEMBLIES AND COVERS

SEATS REAR SEAT, WITHOUT CHILD SEAT, 1994-95 GRAND CHEROKEE AND GRAND WAGONEER - ZJ Fig. IZJ-610

REAR SEAT, WITHOUT CHILD SEAT 1996, GRAND CHERKEE, ZJ . . . . . Fig. IZJ-615

REAR BENCH SEAT WITH CHILD SEAT 1995 GRAND CHEROKEE, ZJ . . . . . Fig. IZJ-620

REAR BENCH SEAT WITH CHILD SEAT 1996 GRAND CHEROKEE, ZJ . . . . . Fig. IZJ-625

SEAT BELTS - FRONT AND REAR

SEAT BELTS - FRONT SEAT - GRAND CHEROKEE AND GRAND WAGONEER - ZJ . . . . . Fig. IZJ-710

SEAT BELTS - REAR SEAT - GRAND CHEROKEE AND GRAND WAGONEER - ZJ . . . . . Fig. IZJ-720

RECLINERS AND SEAT TRACKS - FRONT

RECLINER AND SEAT TRACK - FRONT SEAT - 1994-95 GRAND CHEROKEE AND GRAND WAGONEER - ZJ . . . . . Fig. IZJ-810

RECLINER AND SEAT TRACK FRONT SEAT GRAND CHEROKEE, ZJ, 1996 . . . . . Fig. IZJ-820

PANELS, LIFTGATE AND SCUFF PLATES

PANELS, LIFTGATE AND SCUFF PLATE - GRAND CHEROKEE AND GRAND WAGONEER - ZJ . . . . . Fig. IZJ-1010

TRIM CODES DEFINED GRAND CHEROKEE
Figure IZJ-99

IZJ–099

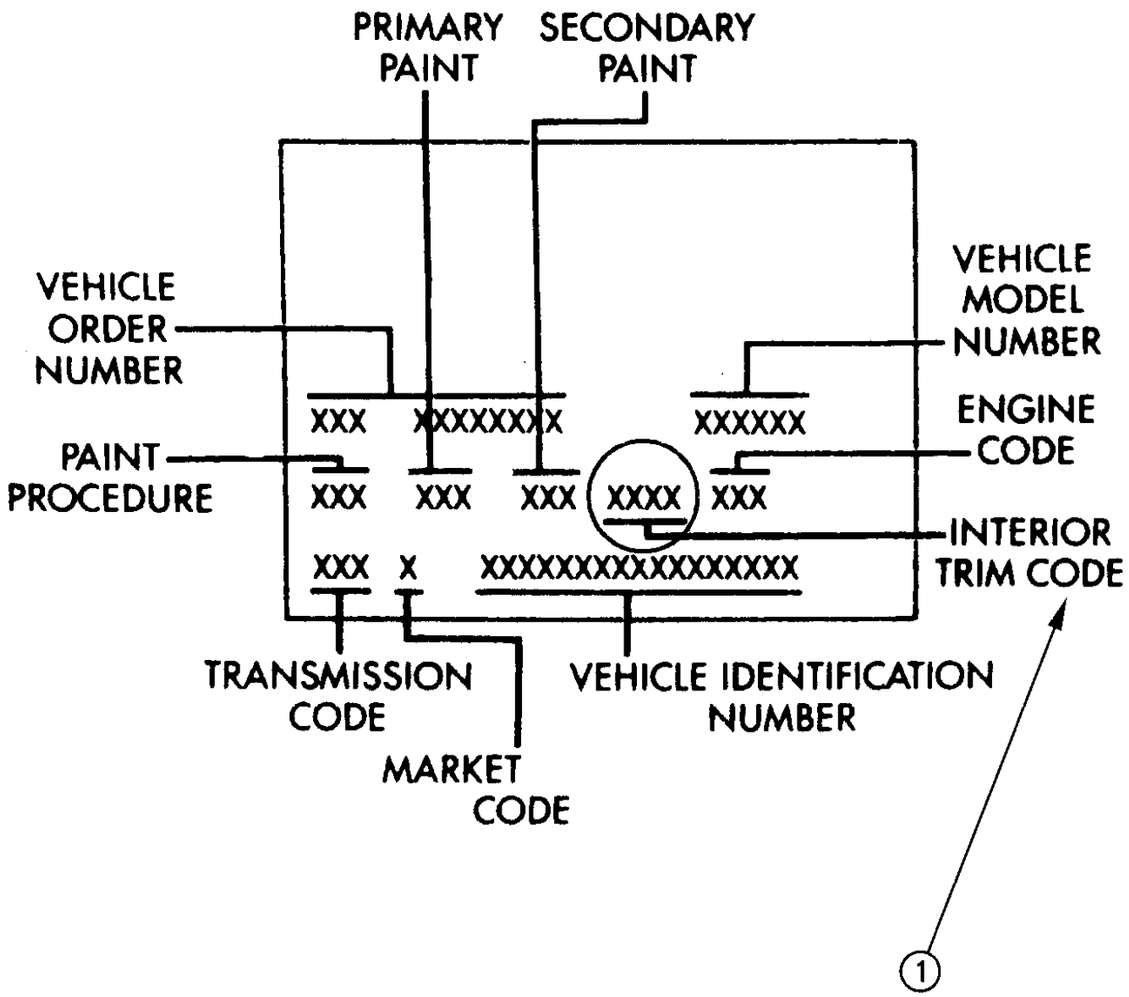

94J29 099

ITEM	PART NUMBER	QTY	BODY	MODEL	DESCRIPTION
NOTE: The body code plate is located on the left side of the dash panel in the engine compartment. e Adhesive #312.					
1					INTERIOR TRIM CODE (4 DIGET) ***
NOTE: THE FIRST TWO DIGITS OF THE CODE INDICATE THE SEAT STYLE. e Adhesive #312.					
AL-- Low back bucket seats w/"perforated leather" inserts and adjustable headrests. e Adhesive #312.					
BL-- Low back bucket seats w/"buscuit style leather" inserts and adjustable headrests. e Adhesive #312.					
CL-- Low back bucket seats w/Genuine Calf-Nap Leather, 6 way power, power lumbar, power recliner e Adhesive #312.					
EL-- Low back bucket seats w/Highland Grain Leather with vinyl trim e Adhesive #312.					
F5-- Low back bucket seats w/Dayton/Regina Cloth e Adhesive #312.					
GL-- Bucket Seats/Orvis Leather e Adhesive #312.					
M7-- Low back bucket seats w/"Barton/Bishop cloth"inserts and adjustable headrests. e Adhesive #312.					
M5-- High back bucket seat w/"Barton/Bishop cloth" inserts and integral headrests. e Adhesive #312.					
J5-- High back bucket seats w/"Jasper cloth" inserts and integral headrests. e Adhesive #312.					
TL--Lux Leather Low-Back Bucket Seats, Adjustable Headrests e Adhesive #312.					
NOTE: The LAST TWO DIGITS OF THE CODE INDICATE THE INTERIOR COLOR. e Adhesive #312.					
--AZ - Agate e Adhesive #312.					
--C3 - Mist Gray e Adhesive #312.					
--DW = Quartz (only used w/BLDW trim code) e Adhesive #312.					
--D5 = Quartz e Adhesive #312.					
--FF = Driftwood e Adhesive #312.					
--TJ - Saddle/Moss Green e Adhesive #312.					
--T6 - Saddle e Adhesive #312.					
--V4 = Champagne e Adhesive #312.					
--VJ - Gold e Adhesive #312.					

MODEL CODES:

72=2 DR Wagon	77=Open Body 93" Whlbase	T=2WD	U=4WD (RHD)
74=4 DR Wagon	78=Open Body 103" Whlbase - Export	J,N=4WD	

BODY STYLES:

YJ=Wrangler (4X4) "S"	XJ=Cherokee SE	ZJ=Grand Cherokee SE	Y1=Wrangler
Weangler (4X4) SE	Cherokee Sport	Grand Cherokee Laredo	X1=Cherokee
Wrangler (4X4) Sahara	Cherokee Country	Grand Cherolee Limited	Z1=Grand Cherokee
Wrangler (4X4) Renegade		ZG=Grand Cherokee European	KDX=Vehicles

AR = Use as Required - = Non Illustrated Part P.A.R. = Paint as Required

« RETURN TO GROUP INDEX

HEADLINER AND ASSIST HANDLES - GRAND CHEROKEE AND GRAND WAGONEER - ZJ
Figure IZJ-120

IZJ-120

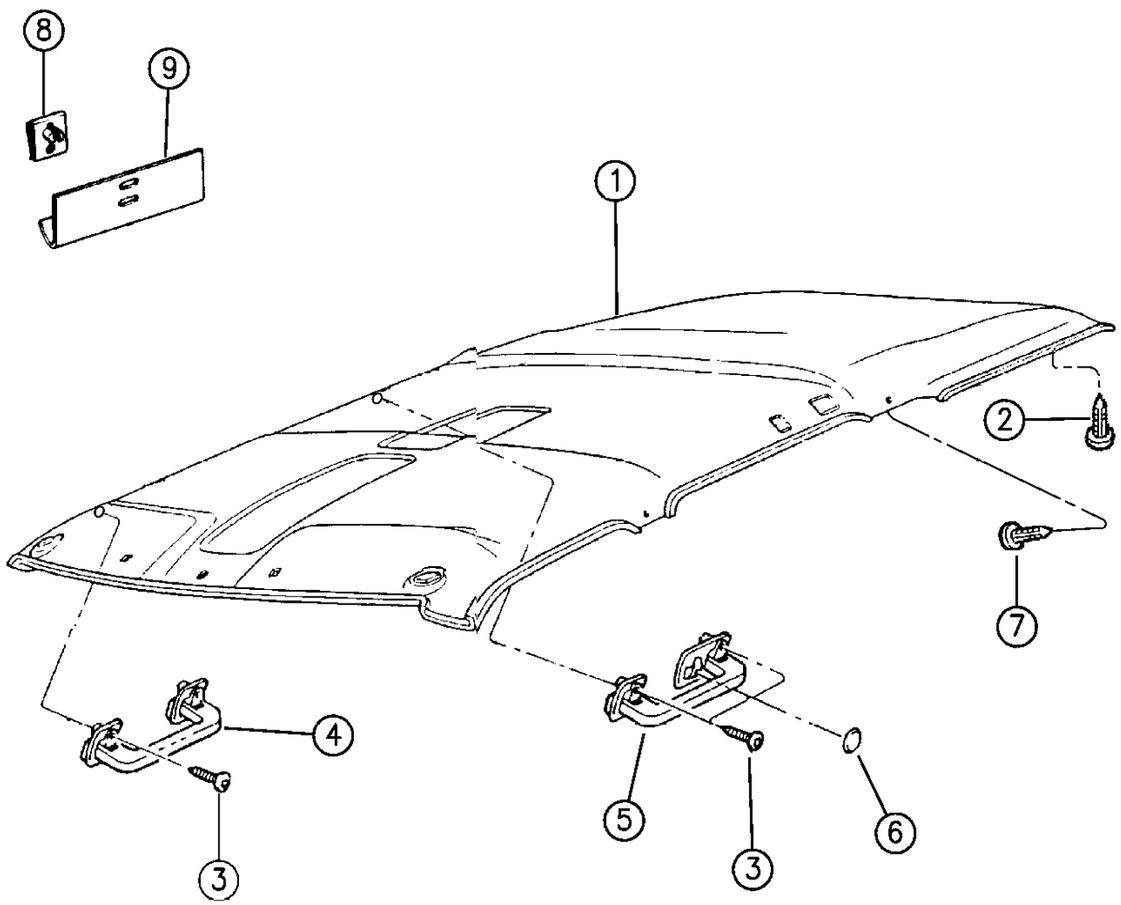

ITEM	PART NUMBER	QTY	BODY	MODEL	DESCRIPTION
1					HEADLINER ASSEMBLY ***
					w/Overhead Console
					1994
	5DK8 8MD5	1			Quartz
	5DK8 8MF4	1			Driftwood
	5DK8 8MV4	1			Champagne
					1995
	5EC4 4RD5	1			Quartz
	5EC4 4RF4	1			Driftwood
	5EC4 4RV4	1			Champagne
					1996
	5EC4 4SAZ	1	Z1		Agate, Export
	5EC4 4SC1	1	ZJ,Z1		Mist Gray, (AZ,C3)
	5EC4 4ST6	1	ZJ,Z1		Saddle, (TJ, T6)
	5FB5 6SAZ	1	ZG		Agate (RHD)
	5FB5 6ST6	1	ZG		Saddle (RHD)
					w/o Overhead Console, w/o Sunroof
					1994
	5DK8 9MD5	1			Quartz
	5DK8 9MF4	1			Driftwood
	5DK8 9MV4	1			Champagne
					1995
	5EA4 3RD5	1			Quartz
	5EA4 3RF4	1			Driftwood
	5EA4 3RV4	1			Champagne
					1996
	5EA4 3SAZ	1	Z1		Agate, Export
	5EA4 3SC1	1			Mist Gray, (AZ,C3)
	5EA4 3ST6	1			Saddle, (TJ, T6)
					1996, AUSTRALIA
	5EJ1 0SAZ	1			Agate
	5EJ1 0SC3	1			Mist Gray
	5EJ1 0ST6	1			Saddle
					w/Power Sunroof (includes plate and bracket for sun roof switch)
					1994
	5EC4 5PD5	1			Quartz
					1995
	5EF3 3RD5	1			Quartz
	5EF3 3RF4	1			Driftwood
	5EF3 3RV4	1			Champagne
					1996

MODEL CODES:

72=2 DR Wagon
74=4 DR Wagon
77=Open Body 93" Whlbase
78=Open Body 103" Whlbase - Export
T=2WD
J,N=4WD
U=4WD (RHD)

BODY STYLES:

YJ=Wrangler (4X4) "S"
Weangler (4X4) SE
Wrangler (4X4) Sahara
Wrangler (4X4) Renegade
XJ=Cherokee SE
Cherokee Sport
Cherokee Country
ZJ=Grand Cherokee SE
Grand Cherokee Laredo
Grand Cherolee Limited
ZG=Grand Cherokee European
Y1=Wrangler
X1=Cherokee
Z1=Grand Cherokee
KDX=Vehicles

AR = Use as Required - = Non Illustrated Part P.A.R. = Paint as Required

HEADLINER AND ASSIST HANDLES - GRAND CHEROKEE AND GRAND WAGONEER - ZJ
Figure IZJ-120

IZJ-120

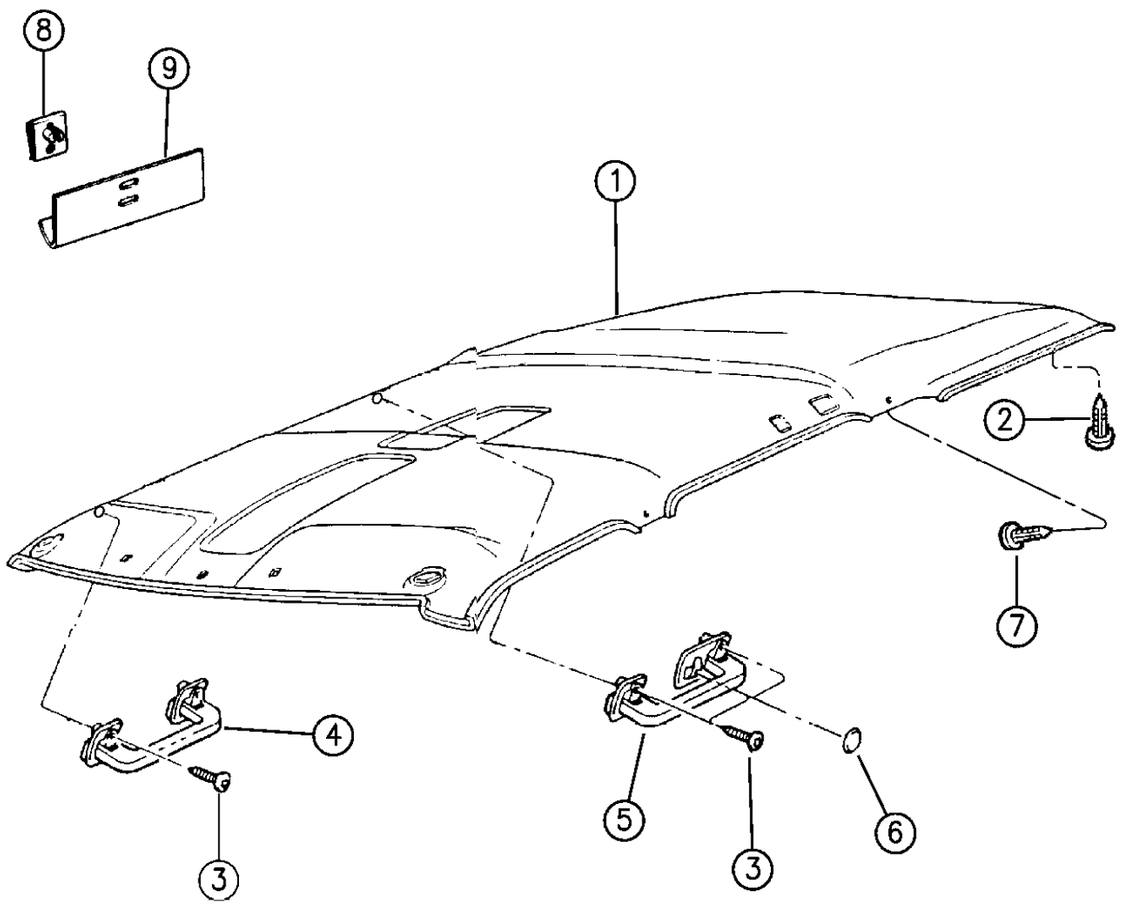

ITEM	PART NUMBER	QTY	BODY	MODEL	DESCRIPTION
	5EF3 3SAZ	1	Z1		Agate, Export
	5EF3 3SC1	1			Mist Gray, (AZ,C3)
	5EF3 3ST6	1			Saddle, (TJ, T6)
-	5521 5336	1			PLATE, Sunroof Switch Bracket Reinforcement, 1994
-	5521 5337	1			BRACKET, Sunroof Switch Mounting, 1994
-					WELT, Headliner Sunroof Opening
					1994
-	5DT2 8PD5	1			Quartz
-	5DT2 8PF4	1			Driftwood
-	5DT2 8PV4	1			Champagne
					1995
	5EJ6 0PD5	1			Quartz
	5EJ6 0PF4	1			Driftwood
	5EJ6 0PV4	1			Champagne
					1996
	5EJ6 0SAZ	1			Agate, Export
	5EJ6 0SC1	1			Mist Gray, (AZ,C3)
	5EJ6 0ST6	1			Saddle, (TJ, T6)
-					RETAINER, Sunroof Welt
					1994, 1995 Up to 12-1-94
-	H626 MD5	1			Quartz
-	H626 MF4	1			Driftwood
-	H626 HV4	1			Champagne
					1995, After 12-1-94
	5EM7 0RD5	1			Quartz
	5EM7 0RF4	1			Driftwood
	5EM7 0RV4	1			Champagne
					1996
	5EM7 0SAZ	1			Agate, Export
	5EM7 0SC1	1			Mist Gray, (AZ,C3)
	5EM7 0ST6	1			Saddle, (TJ, T6)
-					PLUG, Headliner Restraint Hole
	5DK1 9MS1	3		ZG	Charcoal
	5DK1 9MY6	3		ZG	Dark Sand
2					RETAINER, Headliner Mounting (Button/Pin Type))
					1994,95
	H452 KD5	2			Quartz
	H452 LF4	2			Driftwood
	H452 KV4	2			Champagne
					1996
	H452 SAZ	1			Agate, Export
	H452 SC1	1			Mist Gray, (AZ,C3)

MODEL CODES:

72=2 DR Wagon
74=4 DR Wagon
77=Open Body 93" Whlbase
78=Open Body 103" Whlbase - Export
T=2WD
J,N=4WD
U=4WD (RHD)

BODY STYLES:

YJ=Wrangler (4X4) "S"
Weangler (4X4) SE
Wrangler (4X4) Sahara
Wrangler (4X4) Renegade
XJ=Cherokee SE
Cherokee Sport
Cherokee Country
ZJ=Grand Cherokee SE
Grand Cherokee Laredo
Grand Cherolee Limited
ZG=Grand Cherokee European
Y1=Wrangler
X1=Cherokee
Z1=Grand Cherokee
KDX=Vehicles

AR = Use as Required - = Non Illustrated Part P.A.R. = Paint as Required

HEADLINER AND ASSIST HANDLES - GRAND CHEROKEE AND GRAND WAGONEER - ZJ
Figure IZJ-120

IZJ-120

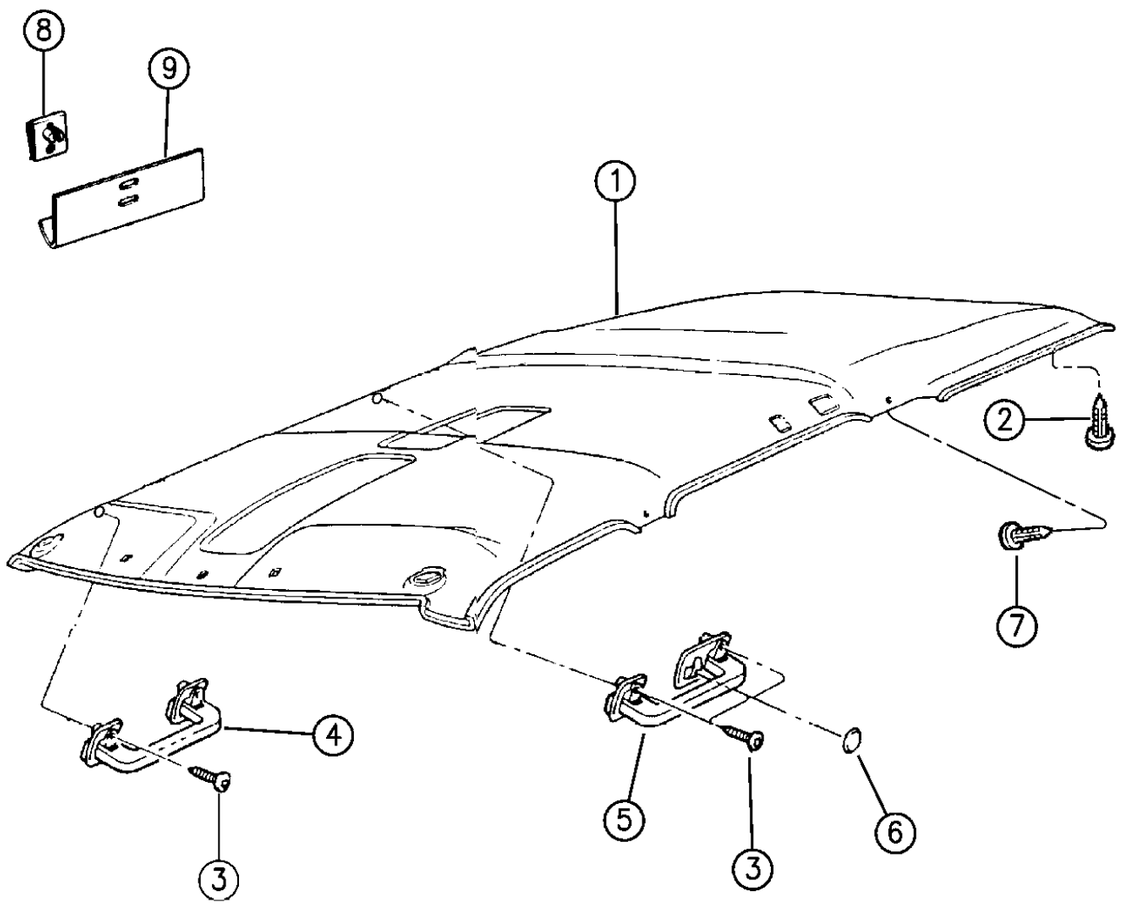

94J29 120

ITEM	PART NUMBER	QTY	BODY	MODEL	DESCRIPTION
	H452 ST6	1			Saddle, (TJ, T6)
3					SCREW
					Assist Handle Mounting
	6034 699	AR			1994,95, .190-16x2.50
	6035 691	AR			1996, .190-16x.750
					Coat Hook Mounting
	6034 699	AR			1994,95, .190-16x2.50
	6035 691	AR			1996, .190-16.750
4					HANDLE, Assist, Right Front
					1994,95
	5DG0 2LD5	1			Quartz
	5DG0 2LF4	1			Driftwood
	5DG0 2MV4	1			Champagne
					1996
	5DG0 2SAZ	1			Agate, Export
	5DG0 2SC1	1			Mist Gray, (AZ,C3)
	5DG0 2ST6	1			Saddle, (TJ, T6)
5					HANDLE, Assist, Rear
					1994-95
	5DG04-5 LD5	1			Quartz
	5DG04-5 LF4	1			Driftwood
	5DG04-5 MV4	1			Champagne
					1996, Includes Tip Out Coat Hook
					Right
	5ES1 4SAZ	1			Agate, Export
	5ES1 4SC1	1			Mist Gray, (AZ,C3)
	5ES1 4ST6	1			Saddle, (TJ, T6)
					Left
	5ES1 5SAZ	1			Agate, Export
	5ES1 5SC1	1			Mist Gray, (AZ,C3)
	5ES1 5ST6	1			Saddle, (TJ, T6)
6					CAP, Assist Handle or Coat Handle
					1994-95
	5BA0 6LD5	2			Quartz
	5BA0 6LF4	2			Driftwood
	5BA0 6MV4	2			Champagne
					1996
	5BA0 6SAZ	2			Agate, Export
	5BA0 6SC1	2			Mist Gray, (AZ,C3)
	5BA0 6ST6	2			Saddle, (TJ, T6)
7	6034 608	2			RETAINER, Headliner Mounting (xmas tree type)
8	J400 0322	2			CLIP, Headliner Mounting, U Type

MODEL CODES:

72=2 DR Wagon
74=4 DR Wagon
77=Open Body 93" Whlbase
78=Open Body 103" Whlbase - Export
T=2WD
J,N=4WD
U=4WD (RHD)

BODY STYLES:

YJ=Wrangler (4X4) "S"
Weangler (4X4) SE
Wrangler (4X4) Sahara
Wrangler (4X4) Renegade
XJ=Cherokee SE
Cherokee Sport
Cherokee Country
ZJ=Grand Cherokee SE
Grand Cherokee Laredo
Grand Cherolee Limited
ZG=Grand Cherokee European
Y1=Wrangler
X1=Cherokee
Z1=Grand Cherokee
KDX=Vehicles

AR = Use as Required - = Non Illustrated Part P.A.R. = Paint as Required

HEADLINER AND ASSIST HANDLES - GRAND CHEROKEE AND GRAND WAGONEER - ZJ
Figure IZJ-120

IZJ–120

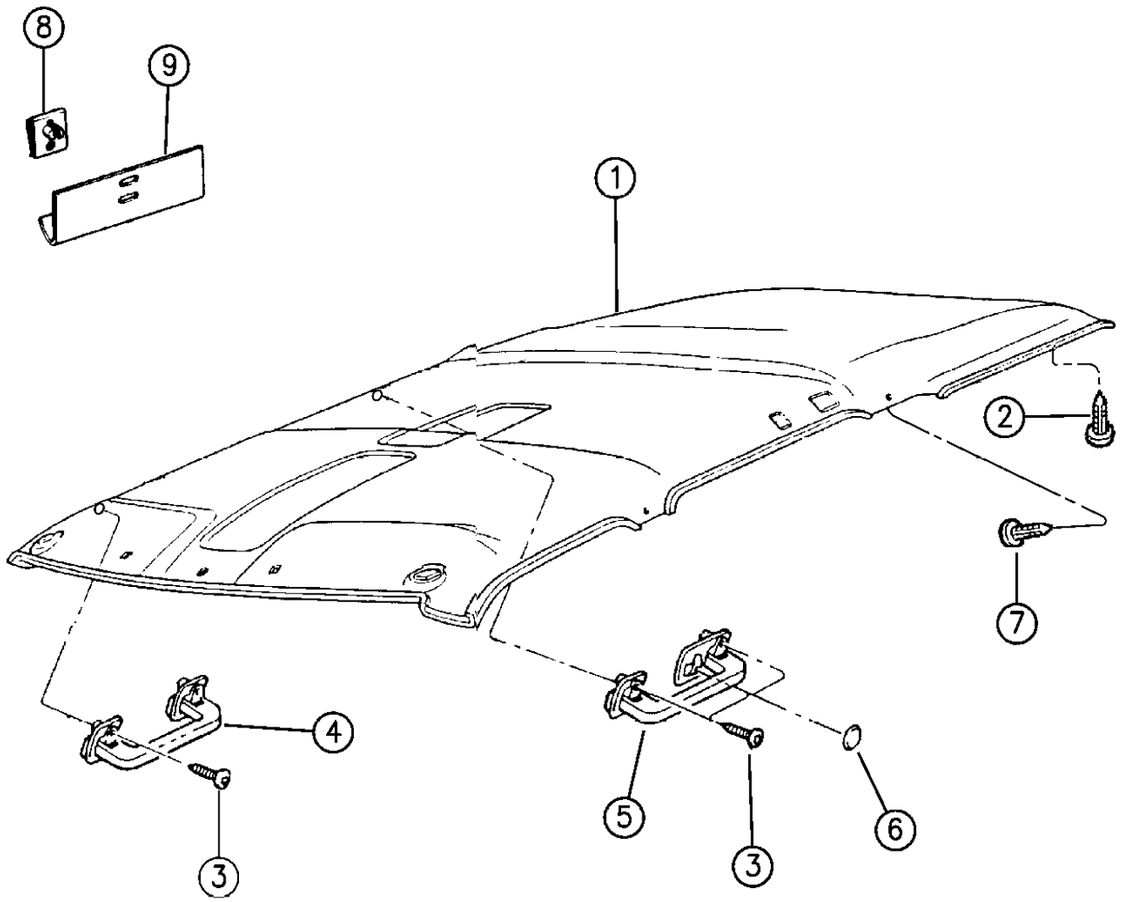

94J29 120

ITEM	PART NUMBER	QTY	BODY	MODEL	DESCRIPTION
9	J368 1225	4			RETAINER, Headliner Mounting

MODEL CODES:

72=2 DR Wagon	77=Open Body 93" Whlbase	T=2WD	U=4WD (RHD)
74=4 DR Wagon	78=Open Body 103" Whlbase - Export	J,N=4WD	

BODY STYLES:

YJ=Wrangler (4X4) "S"	XJ=Cherokee SE	ZJ=Grand Cherokee SE	Y1=Wrangler
Weangler (4X4) SE	Cherokee Sport	Grand Cherokee Laredo	X1=Cherokee
Wrangler (4X4) Sahara	Cherokee Country	Grand Cherolee Limited	Z1=Grand Cherokee
Wrangler (4X4) Renegade		ZG=Grand Cherokee European	KDX=Vehicles

AR = Use as Required - = Non Illustrated Part P.A.R. = Paint as Required

IZJ-125

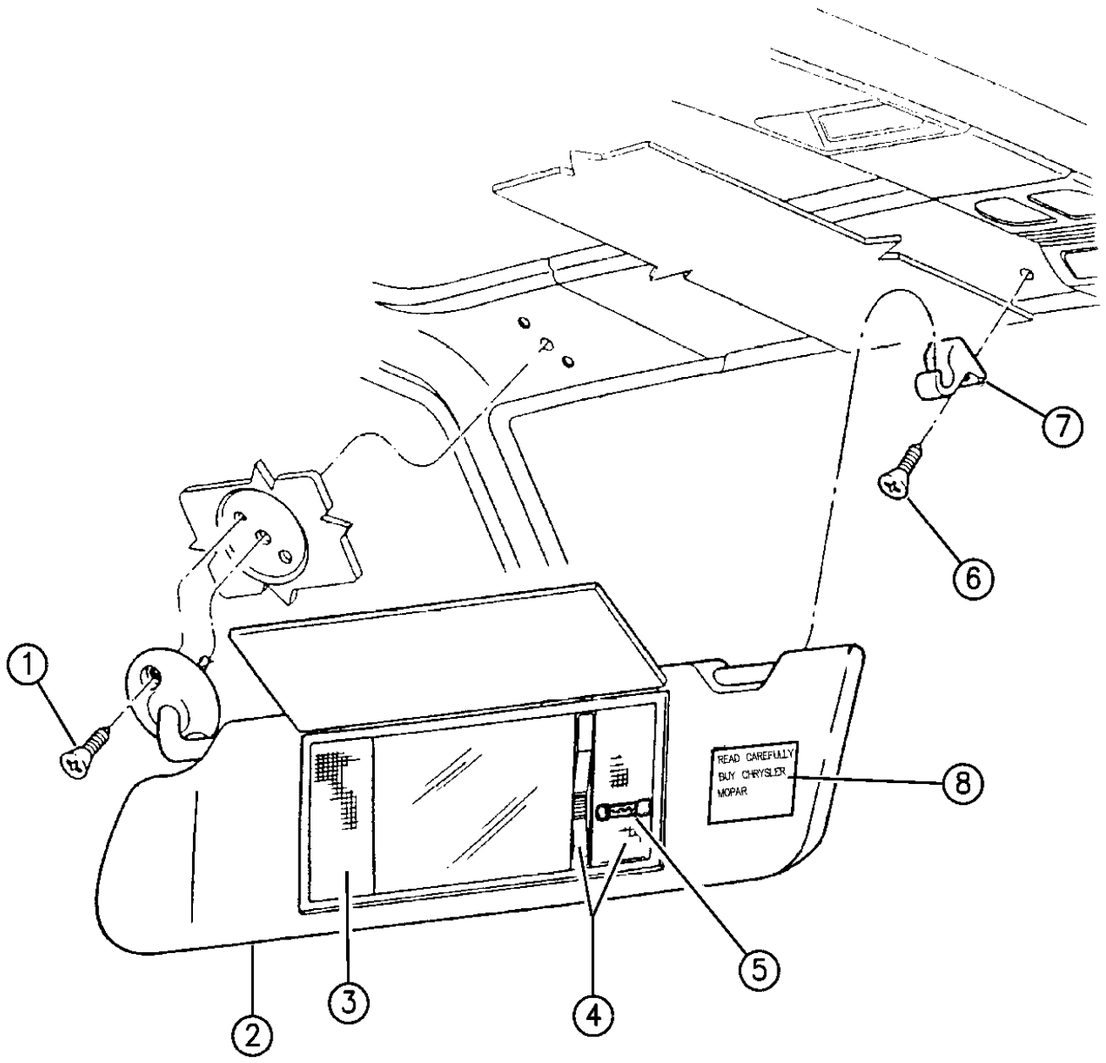

94J29 125

ITEM	PART NUMBER	QTY	BODY	MODEL	DESCRIPTION
1					SCREW,
	6034 912	4			1994,95, .190-16x.750
	6035 691	4			1996, .190-16x1.00
2					SUNVISOR ASSEMBLY, (the bracket, item 7, is included in this assembly) ***
					Lighted
					1994
	5DM46-7 MD5	1			Quartz
	5DM46-7 MF4	1			Driftwood
	5DM46-7 MV4	1			Champagne
					1995, Right, Up to 5-30-95
	5EH9 8PD5	1			Quartz
	5EH9 8PF4	1			Driftwood
	5EH9 8PV4	1			Champagne
					1995, Left, Up to 5-30-95
	5EN6 3RD5	1			Quartz
	5EN6 3RF4	1			Driftwood
	5EN6 3RV4	1			Champagne
					1995, After 5-30-95
	5FC36-7 RF4	1			Driftwood
	5FC36-7 RV4	1			Champagne
	5FC36-7 RD5	1			Quartz
					1995, Right, After 5-30-95
	5FE1 8RF4	1	ZG		Driftwood
	5FE1 8RV4	1	ZG		Champagne
	5FE1 8RD5	1	ZG		Quartz
					1996, Right
	5FC7 3SC1	1			Mist Gray
	5FC7 3ST6	1			Saddle
					1996, Left
	5FC7 7SC1	1			Mist Gray
	5FC7 7ST6	1			Saddle
					Lighted w/Extender
					1996, Right
	5FC4 4SC1	1	ZJ		Mist Gray
	5FC4 4ST6	1	ZJ		Saddle
					1996, Left, w/Garage Door Opener, Lighted, Extended
	5FK6 6SC1	1	ZJ		Mist Gray
	5FK6 6ST6	1	ZJ		Saddle
					Lighted w/Extender
					1996, Right, EXPORT
	5FC4 4SAZ	1	Z1		Agate

MODEL CODES:

72=2 DR Wagon
74=4 DR Wagon
77=Open Body 93" Whlbase
78=Open Body 103" Whlbase - Export
T=2WD
J,N=4WD
U=4WD (RHD)

BODY STYLES:

YJ=Wrangler (4X4) "S"
Weangler (4X4) SE
Wrangler (4X4) Sahara
Wrangler (4X4) Renegade
XJ=Cherokee SE
Cherokee Sport
Cherokee Country
ZJ=Grand Cherokee SE
Grand Cherokee Laredo
Grand Cherolee Limited
ZG=Grand Cherokee European
Y1=Wrangler
X1=Cherokee
Z1=Grand Cherokee
KDX=Vehicles

AR = Use as Required - = Non Illustrated Part P.A.R. = Paint as Required

IZJ-125

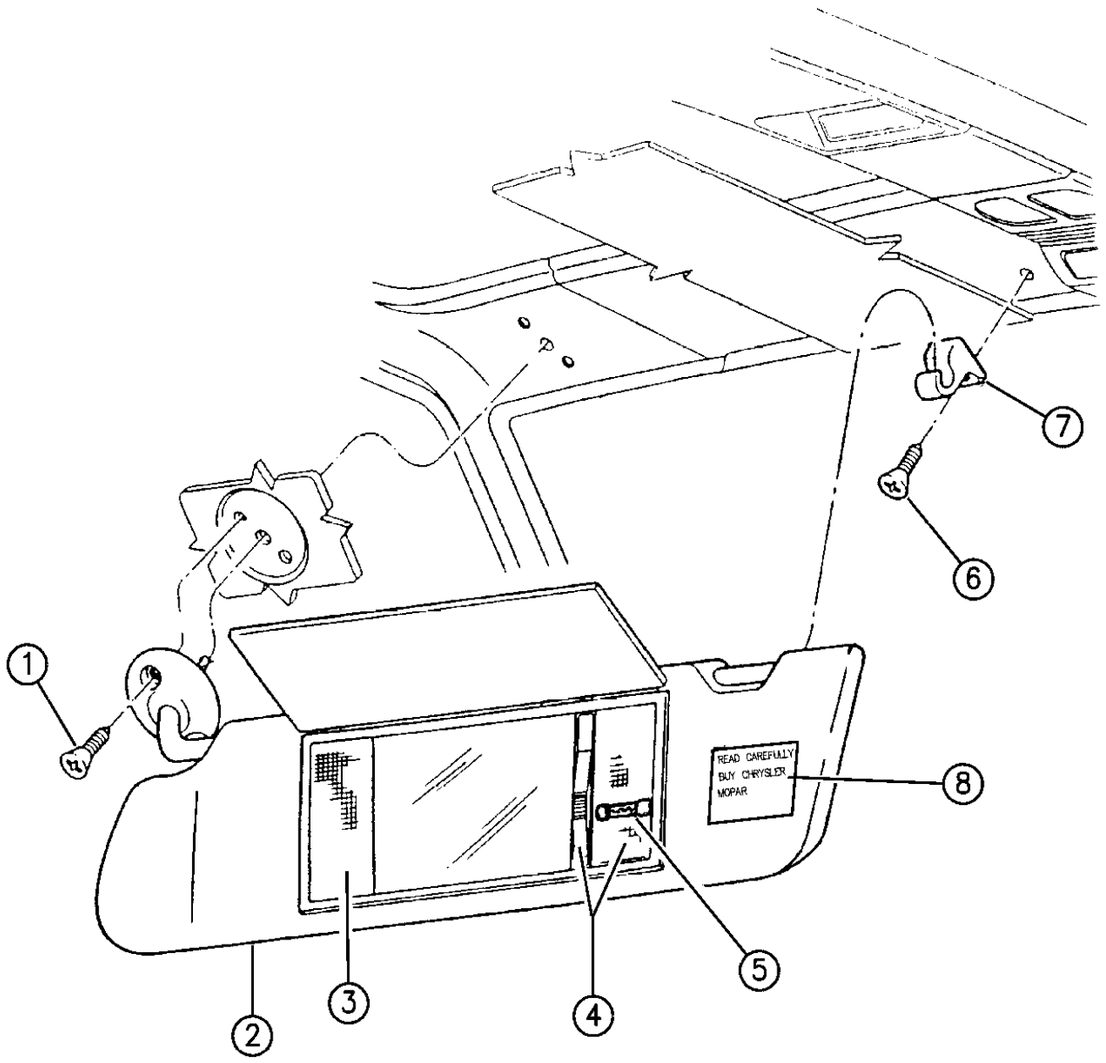

94J29 125

ITEM	PART NUMBER	QTY	BODY	MODEL	DESCRIPTION
	5FC4 4ST6	1	Z1		Saddle
					1996, Left, EXPORT
	5EC7 3SAZ	1	Z1		Agate
	5EC7 3ST6	1	Z1		Saddle
					1996, L.H.D., EXPORT
	5EC72-3 SAZ	1	ZG		Agate
	5EC72-3 ST6	1	ZG		Saddle
					1996, R.H.D., EXPORT
	5EC42-3 SAZ	1	ZG		Agate
	5EC42-3 ST6	1	ZG		Saddle
					Unlighted, (1994,95 Only)
					1994
	5DM48-9 MD5	1			Quartz
	5DM48-9 MF4	1			Driftwood
					1995, Right, Up to 5-30-95
	5DZ5 6PD5	1			Quartz
	5DZ5 6PF4	1			Driftwood
					1995, Left, Up to 5-30-95
	5EN6 1RD5	1			Quartz
	5EN6 1RF4	1			Driftwood
					1995, After 5-30-95
	5FC38-9 RF4	1			Driftwood
	5FC38-9 RD5	1			Quartz
3	4620 137	2			LENS, Left Side of Mirror
4	4620 136	2			LENS AND BUTTON ASSEMBLY, Right Side of Mirror ***
5	6501 966	4			BULB
6		2			SCREW, (152996 not serviced, use .190 - 16 X .750)
7					BRACKET, Sunvisor Support, (Also Available In Sunvisor Assembly)
					1994,95
	5DM4 5MD5	2	ZG		Quartz
	5DM4 5MF4	2	ZG		Driftwood
	5DM4 5MV4	2	ZG		Champagne
					1994,95
	5EZ9 2RV4	2	ZJ,Z1		Champagne
	5EZ9 2RF4	2	ZJ,Z1		Driftwood
	5EZ9 2RD5	2	ZJ,Z1		Quartz
					1996
	5EZ9 2SC1	2	ZJ,Z1		Mist Gray
	5EZ9 2ST6	2	ZJ,Z1		Saddle
					1996, EXPORT
	5EN1 6SAZ	2	ZG		Agate

MODEL CODES:

72=2 DR Wagon
74=4 DR Wagon
77=Open Body 93" Whlbase
78=Open Body 103" Whlbase - Export
T=2WD
J,N=4WD
U=4WD (RHD)

BODY STYLES:

YJ=Wrangler (4X4) "S"
Weangler (4X4) SE
Wrangler (4X4) Sahara
Wrangler (4X4) Renegade
XJ=Cherokee SE
Cherokee Sport
Cherokee Country
ZJ=Grand Cherokee SE
Grand Cherokee Laredo
Grand Cherolee Limited
ZG=Grand Cherokee European
Y1=Wrangler
X1=Cherokee
Z1=Grand Cherokee
KDX=Vehicles

AR = Use as Required - = Non Illustrated Part P.A.R. = Paint as Required

IZJ-125

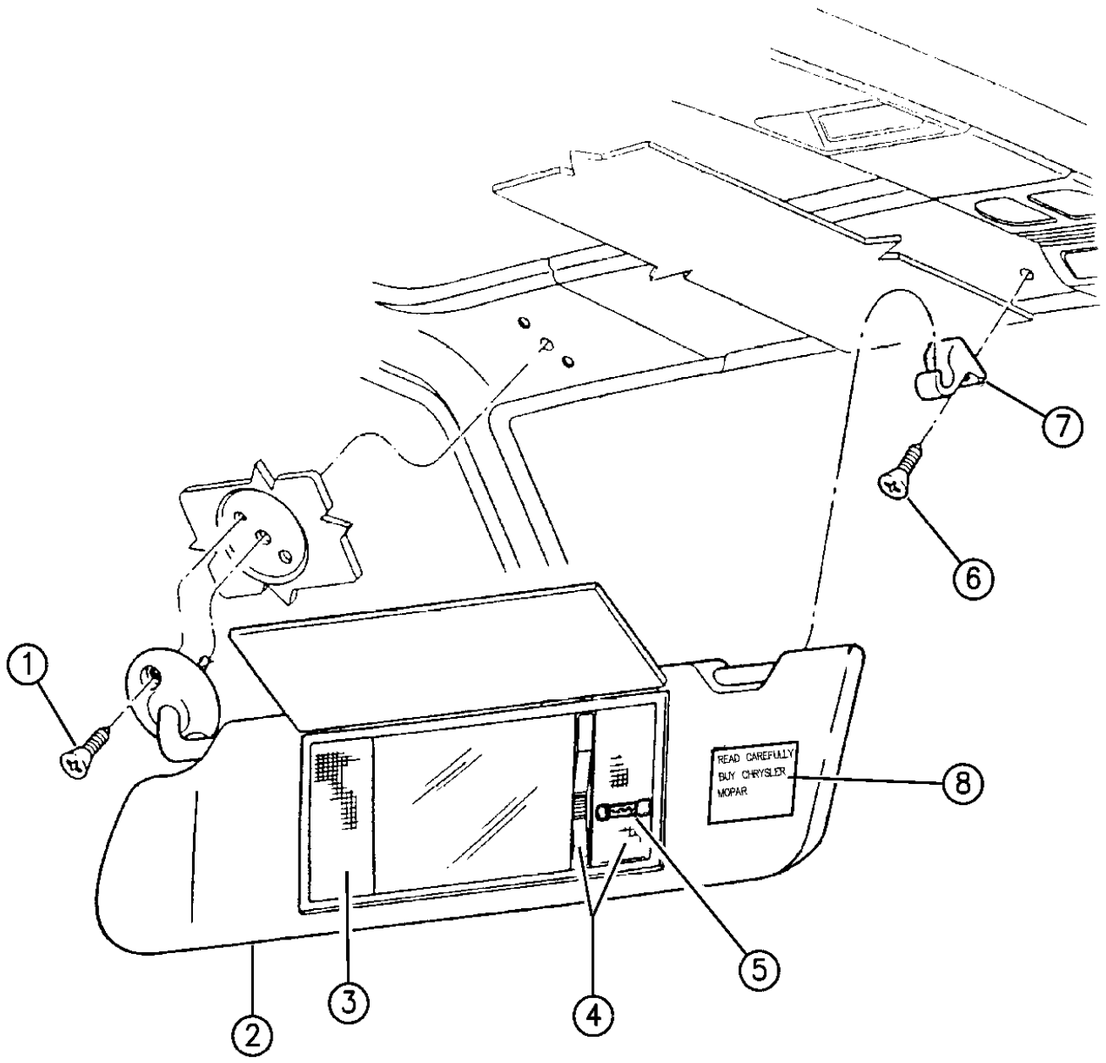

94J29 125

ITEM	PART NUMBER	QTY	BODY	MODEL	DESCRIPTION
	5EN1 6ST6	2	ZG		Saddle
8					LABEL, Shift Pattern
	5300 9357	1			w/TC-242
	5300 7458	1			w/TC-231
	5300 7461	1			W/TC-249
	5200 8712	1			LABEL, ABS Operation

MODEL CODES:

72=2 DR Wagon
74=4 DR Wagon
77=Open Body 93" Whlbase
78=Open Body 103" Whlbase - Export
T=2WD
J,N=4WD
U=4WD (RHD)

BODY STYLES:

YJ=Wrangler (4X4) "S"
Weangler (4X4) SE
Wrangler (4X4) Sahara
Wrangler (4X4) Renegade
XJ=Cherokee SE
Cherokee Sport
Cherokee Country
ZJ=Grand Cherokee SE
Grand Cherokee Laredo
Grand Cherolee Limited
ZG=Grand Cherokee European
Y1=Wrangler
X1=Cherokee
Z1=Grand Cherokee
KDX=Vehicles

AR = Use as Required - = Non Illustrated Part P.A.R. = Paint as Required

INTERIOR TRIM PANELS AND GARNISH MOULDINGS - GRAND CHEROKEE AND GRAND WAGONEER - ZJ
Figure IZJ-210

IZJ-210B

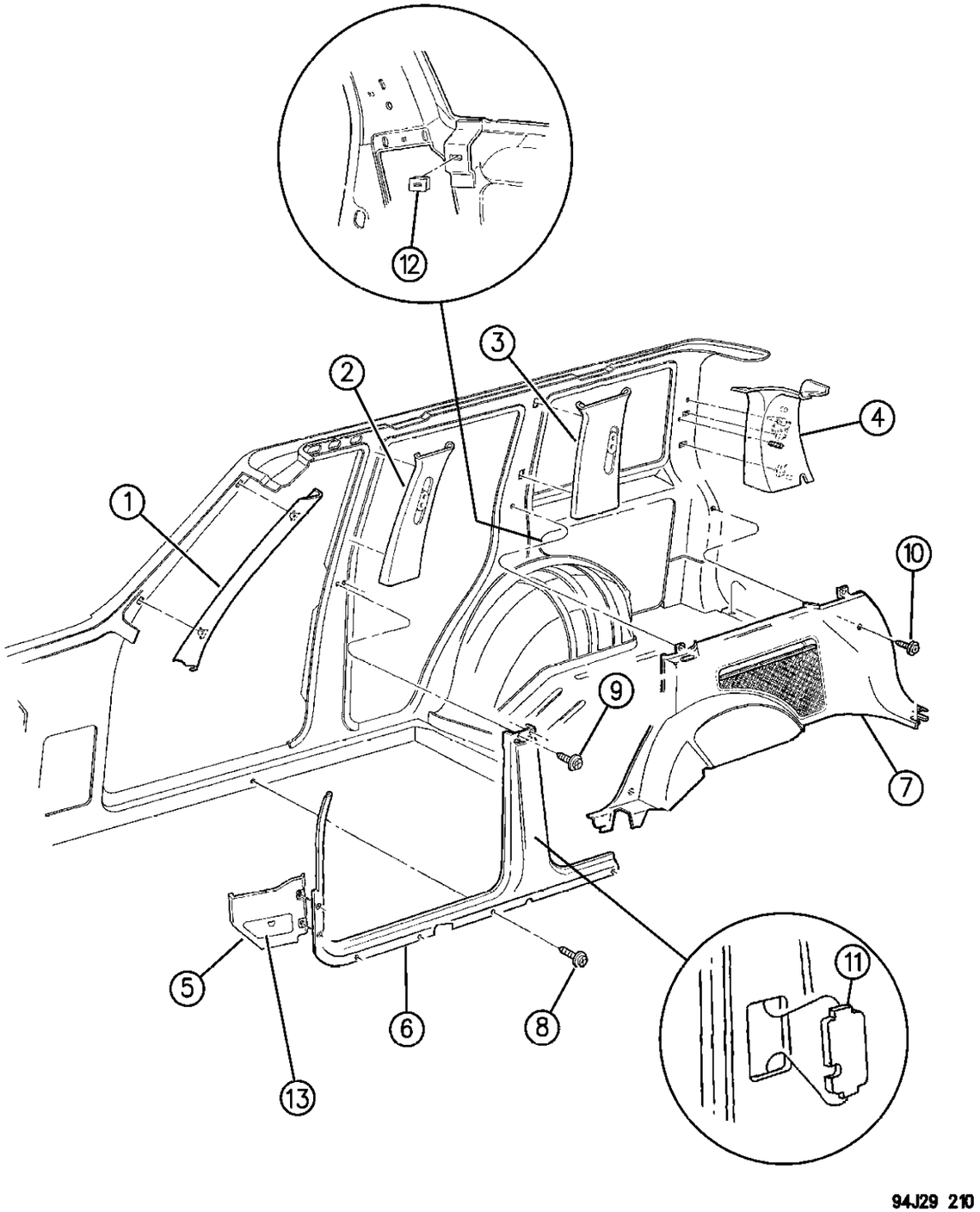

ITEM	PART NUMBER	QTY	BODY	MODEL	DESCRIPTION
1					MOULDING ASSEMBLY, Windshield Side (Includes Clips) ***
					Up to 10-25-93
	5AN86-7 LD5	1			Quartz
	5AN86-7 LF4	1			Driftwood
	5AN86-7 MV4	1			Champagne
					After 10-25-93
	5DW78-9 PD5	1			Quartz
	5DW78-9 PF4	1			Driftwood
	5DW78-9 PV4	1			Champagne
					1996
	5FC58-9 SAZ	1			Agate
	5FC58-9 SC8	1			Dark Cirrus Gray
	5FC58-9 ST6	1			Saddle
2					PANEL ASSEMBLY, "B" Pillar Upper (Includes Insulation) ***
					w/Small Round Hole For Attaching Seatbelt To The "B" Pillar
					1994,95
	5AN90-1 LD5	1			Quartz
	5AN90-1 LF4	1			Driftwood
	5AN90-1 MV4	1			Champagne
					1996
	5DT18-9 SAZ	1			Agate
	5DT18-9 SC1	1			Mist Gray
	5DT18-9 ST6	1			Saddle
					w/Slotted Opening For Attaching EURO Style Seatbelt To The "B" Pillar
					1994,95
	5CW06-7 MD5	1			Quartz, EUROPE
	5CW06-7 MF4	1			Driftwood, EUROPE
	5CW06-7 MV4	1			Champagne, EUROPE
					1996
	5DT18-9 SAZ	1			Agate, EUROPE
	5DT18-9 SC1	1			Mist Gray, EUROPE
	5DT18-9 ST6	1			Saddle, EUROPE
3					PANEL ASSEMBLY, "C" Pillar (Includes Clips) ***
					w/Insulation
					1994, 1995 Up to 10-25-94
	5AN98-9 LD5	1			Quartz
	5AN98-9 LF4	1			Driftwood
	5AN98-9 MV4	1			Champagne
					1995, After 10-25-94
	5EM68-9 RD5	1			Quartz
	5EM68-9 RF4	1			Driftwood

MODEL CODES:

72=2 DR Wagon
74=4 DR Wagon
77=Open Body 93" Whlbase
78=Open Body 103" Whlbase - Export
T=2WD
J,N=4WD
U=4WD (RHD)

BODY STYLES:

YJ=Wrangler (4X4) "S"
Weangler (4X4) SE
Wrangler (4X4) Sahara
Wrangler (4X4) Renegade
XJ=Cherokee SE
Cherokee Sport
Cherokee Country
ZJ=Grand Cherokee SE
Grand Cherokee Laredo
Grand Cherolee Limited
ZG=Grand Cherokee European
Y1=Wrangler
X1=Cherokee
Z1=Grand Cherokee
KDX=Vehicles

AR = Use as Required - = Non Illustrated Part P.A.R. = Paint as Required

IZJ-210B

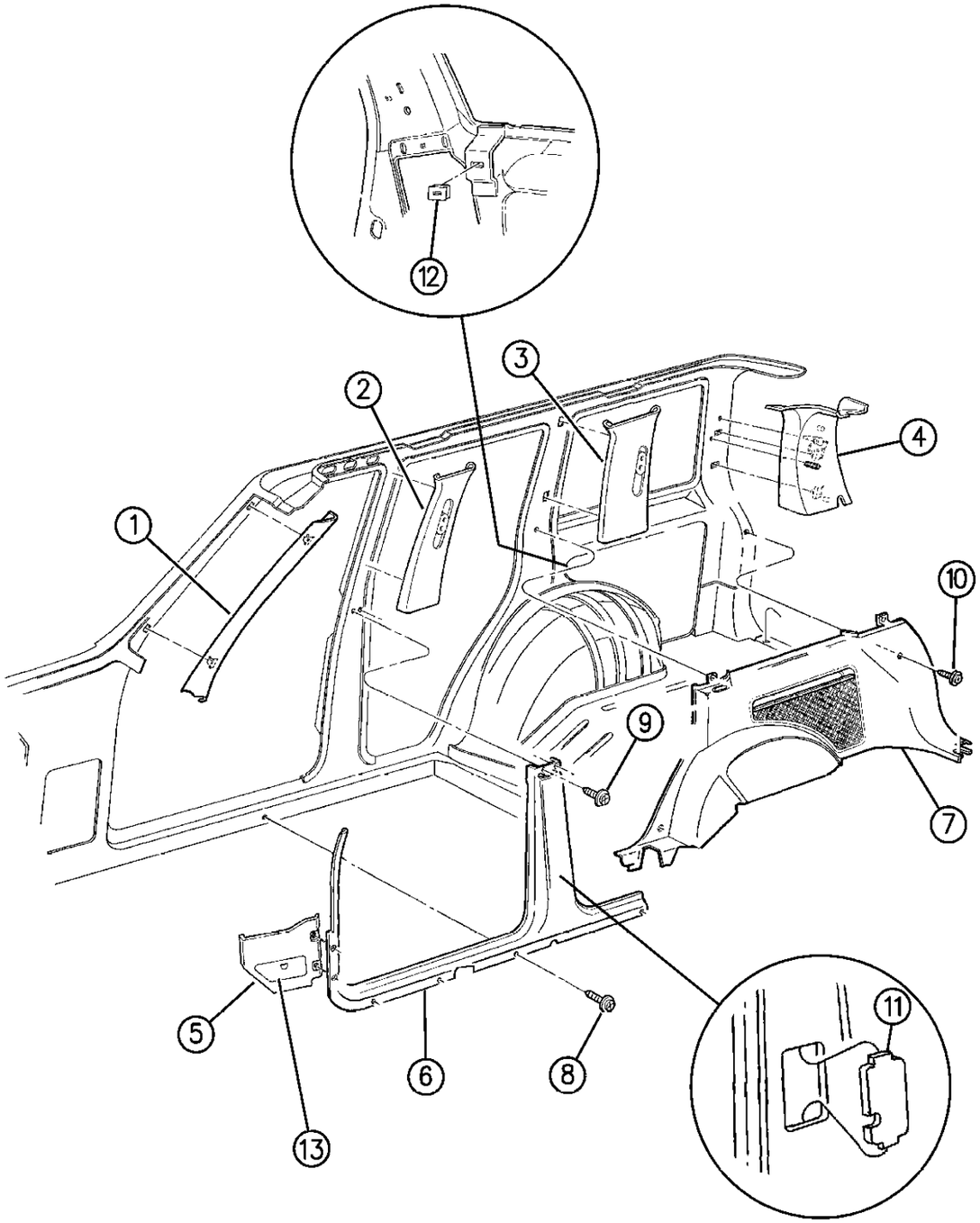

ITEM	PART NUMBER	QTY	BODY	MODEL	DESCRIPTION
	5EM68-9 RV4	1			Champagne
					1996, w/Slider
	5DT20-1 SAZ	1			Agate
	5DT20-1 SC1	1			Mist Gray
	5DT20-1 ST6	1			Saddle
-					SLIDER, Trim Opening, 1996 ***
	5DU3 6SAZ	1			Agate, Stamped 55215940
	5DU3 6SC1	1			Mist Gray
	5DU3 6ST6	1			Saddle
-	5503 3372-3	1			INSULATION, "C" Pillar Trim Panel
4					PANEL ASSEMBLY, "D" Pillar (Includes Nail, Retainer and Clips) ***
					w/ or w/o Insulation, (Serviced Part Includes Insulation) ***
					1994,95
	5DS30-1 MD5	1			Quartz
	5DS30-1 MF4	1			Driftwood
	5DS30-1 MV4	1			Champagne
					1996
	5FK16-7 SAZ	1			Agate
	5FK16-7 SC3	1			Mist Gray
	5FK16-7 ST6	1			Saddle
-	5503 3368-9	1			INSULATION, "D" Pillar Trim Panel
5					PANEL ASSEMBLY, Cowl Trim ***
					Right
					1994,95
	5DU7 2MD5	1			Quartz
	5DU7 2MF8	1			Driftwood
	5DU7 2MV4	1			Champagne
					1996
	5DT1 6SAZ	1	ZJ,Z1		Agate
	5DT1 6SC3	1	ZJ		Mist Gray
	5DT1 6ST6	1	ZJ,Z1		Spice
	5FF2 8SAZ	1	ZG		Agate, EXPORT
	5FF2 8ST6	1	ZG		Saddle, EXPORT
					Left, Up to 3-16-94
	5DU7 3MD5	1			Quartz
	5DU7 3MF8	1			Driftwood
	5DU7 3MV4	1			Champagne
					Left
					1994, After 3-16-94, 1995
	5EH4 9PD5	1			Quartz
	5EH4 9PF8	1			Driftwood
	5EH4 9PV4	1			Champagne

MODEL CODES:

72=2 DR Wagon
74=4 DR Wagon
77=Open Body 93" Whlbase
78=Open Body 103" Whlbase - Export
T=2WD
J,N=4WD
U=4WD (RHD)

BODY STYLES:

YJ=Wrangler (4X4) "S"
Weangler (4X4) SE
Wrangler (4X4) Sahara
Wrangler (4X4) Renegade
XJ=Cherokee SE
Cherokee Sport
Cherokee Country
ZJ=Grand Cherokee SE
Grand Cherokee Laredo
Grand Cherolee Limited
ZG=Grand Cherokee European
Y1=Wrangler
X1=Cherokee
Z1=Grand Cherokee
KDX=Vehicles

AR = Use as Required - = Non Illustrated Part P.A.R. = Paint as Required

IZJ-210B

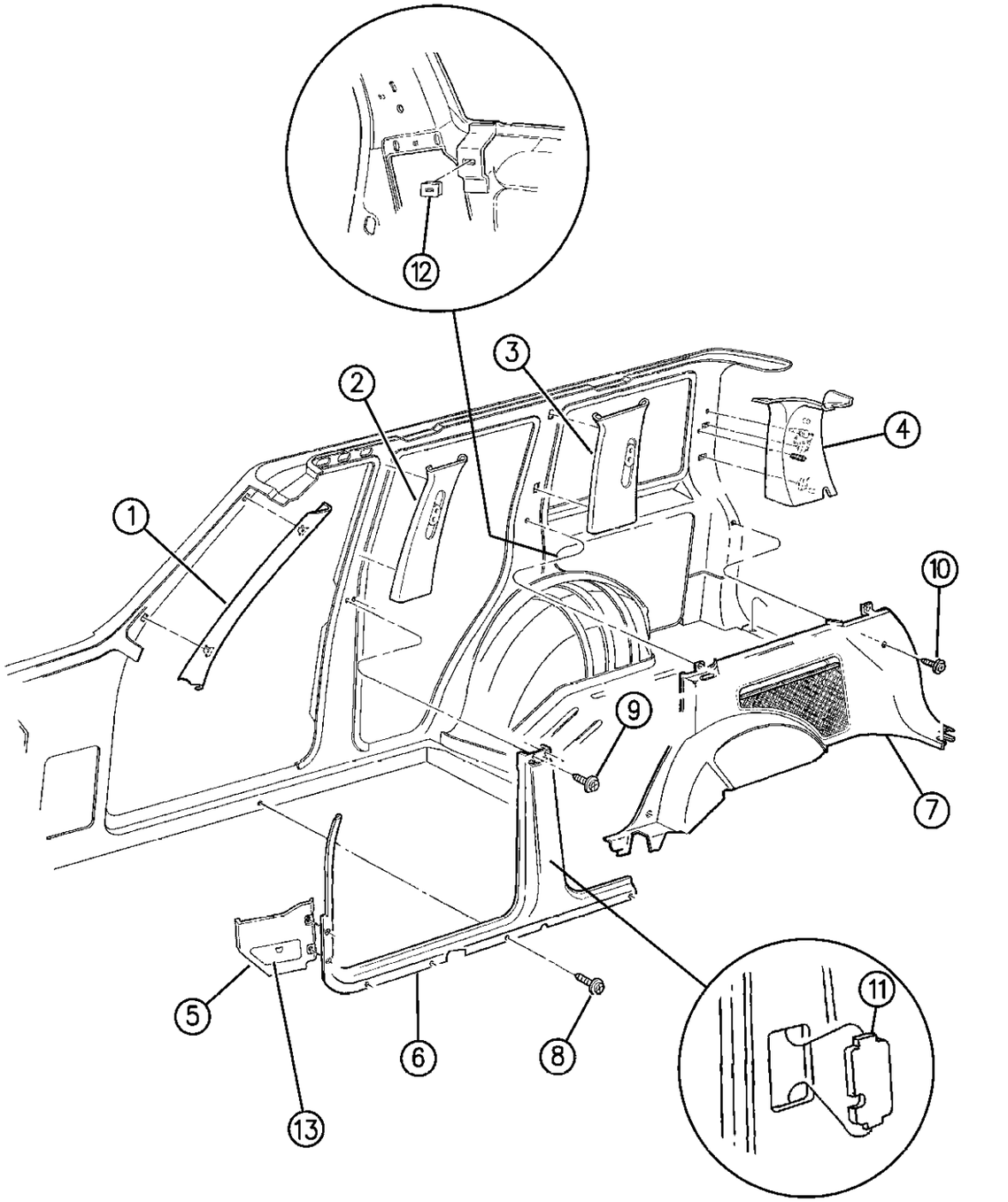

ITEM	PART NUMBER	QTY	BODY	MODEL	DESCRIPTION
					1996
	5EC7 1SAZ	1			Agate
	5EC7 1SC3	1			Mist Gray
	5EC7 1ST6	1			Saddle
-	3420 2447	4			U-NUT, (Also Included In The Cowl Trim Panel)
-	6035 266	2			STUD/COLLAR, Cowl Panel, 1994 ***
6					PANEL, "B" Pillar Trim, Lower
					Right
					1994,95
	5DU6 8MD5	1			Quartz, Stamped 55030950
	5DU6 8MF8	1			Driftwood
	5DU6 8MV4	1			Champagne
					1996
	5ES8 2SAZ	1			Agate
	5ES8 2SC3	1			Mist Gray
	5ES8 2ST6	1			Saddle
					Left
					1994,95
	5DG7 3LD5	1			Quartz, Stamped 55030951
	5DG7 3LF8	1			Driftwood
	5DG7 3MV4	1			Champagne
					1996
	5ES8 3SAZ	1			Agate
	5ES8 3SC3	1			Mist Gray
	5ES8 3ST6	1			Saddle
7					PANEL ASSEMBLY, Quarter Trim (Includes Carpet And Seatbelt Stowage Retainer) ***
NOTE: The left quarter trim panel includes the fuel filler remote access door and spare tire standoff. e Adhesive #312.					
					Left, w/Cargo Cover Mounting Bracket and Insulation
					1994,95
	5DV2 1PD5	1			Quartz
	5DV2 1PF8	1			Driftwood
	5DV2 1PV4	1			Champagne
-	0153 459	2			SCREW, Attach Quarter Trim Panel
					1996
	5FB6 1SAZ	1			Agate
	5FB6 1SC3	1			Mist Gray
	5FB6 1ST6	1			Saddle
-					DOOR, Access Fuel
					1994,95
	5DK8 5MV4	1			Champagne
	5DK8 5MF8	1			Driftwood

MODEL CODES:

72=2 DR Wagon
74=4 DR Wagon
77=Open Body 93" Whlbase
78=Open Body 103" Whlbase - Export
T=2WD
J,N=4WD
U=4WD (RHD)

BODY STYLES:

YJ=Wrangler (4X4) "S"
Weangler (4X4) SE
Wrangler (4X4) Sahara
Wrangler (4X4) Renegade
XJ=Cherokee SE
Cherokee Sport
Cherokee Country
ZJ=Grand Cherokee SE
Grand Cherokee Laredo
Grand Cherolee Limited
ZG=Grand Cherokee European
Y1=Wrangler
X1=Cherokee
Z1=Grand Cherokee
KDX=Vehicles

AR = Use as Required - = Non Illustrated Part P.A.R. = Paint as Required

INTERIOR TRIM PANELS AND GARNISH MOULDINGS - GRAND CHEROKEE AND GRAND WAGONEER - ZJ
Figure IZJ-210

IZJ-210B

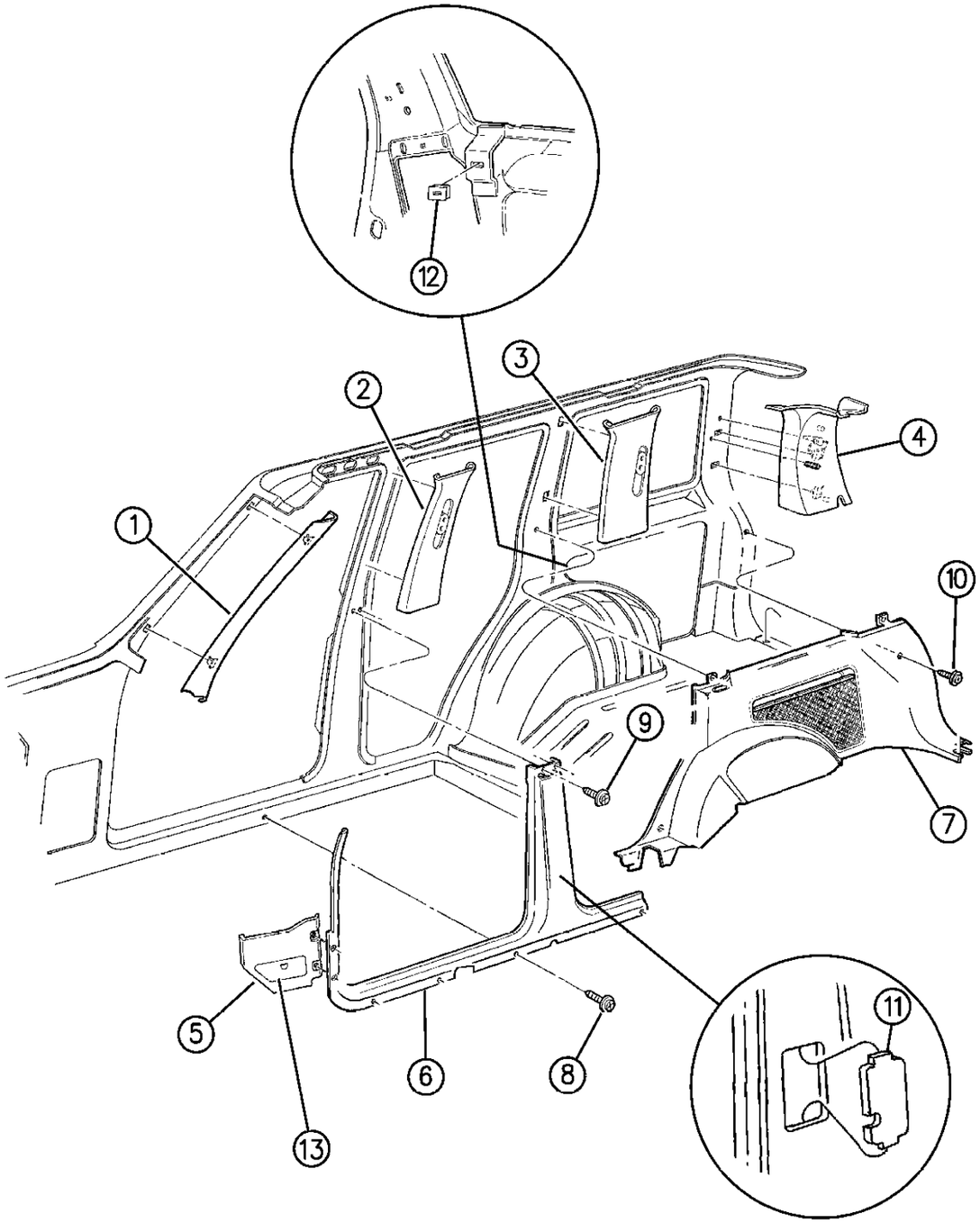

ITEM	PART NUMBER	QTY	BODY	MODEL	DESCRIPTION
	5DK8 5MD5	1			Quartz
					1996
	5FB5 2SAZ	1			Agate
	5FB5 2SC3	1			Mist Gray
	5FB5 2ST6	1			Saddle
					Right, w/Storage Net, Cargo Cover Mounting Bracket and Insulation
					1994-95
	5EE1 4PD5	1			Quartz
	5EE1 4PF8	1			Driftwood
	5EE1 4PV4	1			Champagne
					1996
	5EE1 4SAZ	1			Agate
	5EE1 4SC3	1			Mist Gray
	5EE1 4ST6	1			Saddle
					Right, w/Cargo Cover Mounting Bracket and Insulation
					1994, Only
	5DM2 4PD5	1			Quartz
	5DM2 4PF8	1			Driftwood
	5DM2 4PV4	1			Champagne
-					RETAINER, Velcro, Seat Belt Stowage, (Also included in right and left quarter trim panel)
					1994,95
-	5DG1 8LD5	1			Quartz
-	5DG1 8LF8	1			Driftwood
-	5DG1 8MV4	1			Champagne
					1996
	5DG1 8SAZ	1			Agate
	5DG1 8SC3	1			Mist Gray
	5DG1 8ST6	1			Saddle
-	6032 976	1			RIVET, Seatbelt Stowage Retainer to Panel
8					SCREW, (Not Serviced) (.164-18X.925)
9	6032 723	4			SCREW, M4.2x1.69x19.05
10	6035 369	2			SCREW, (Not Serviced (.164-18X.625)
11					PLUG, B-Pillar Wire Harness Cover, NOT SERVICED
12	3420 1872	2			NUT, Trim to Cargo Cover Mounting Bracket
13					PANEL, Fuse Access Door, 1996
	5FF7 9SAZ	1			Agate
	5FF7 9SC3	1			Mist Gray
	5FF7 9ST6	1			Saddle

MODEL CODES:

72=2 DR Wagon
74=4 DR Wagon
77=Open Body 93" Whlbase
78=Open Body 103" Whlbase - Export
T=2WD
J,N=4WD
U=4WD (RHD)

BODY STYLES:

YJ=Wrangler (4X4) "S"
Weangler (4X4) SE
Wrangler (4X4) Sahara
Wrangler (4X4) Renegade
XJ=Cherokee SE
Cherokee Sport
Cherokee Country
ZJ=Grand Cherokee SE
Grand Cherokee Laredo
Grand Cherolee Limited
ZG=Grand Cherokee European
Y1=Wrangler
X1=Cherokee
Z1=Grand Cherokee
KDX=Vehicles

AR = Use as Required - = Non Illustrated Part P.A.R. = Paint as Required

CARPET - GRAND CHEROKEE AND GRAND WAGONEER - ZJ
Figure IZJ-310

IZJ-310A

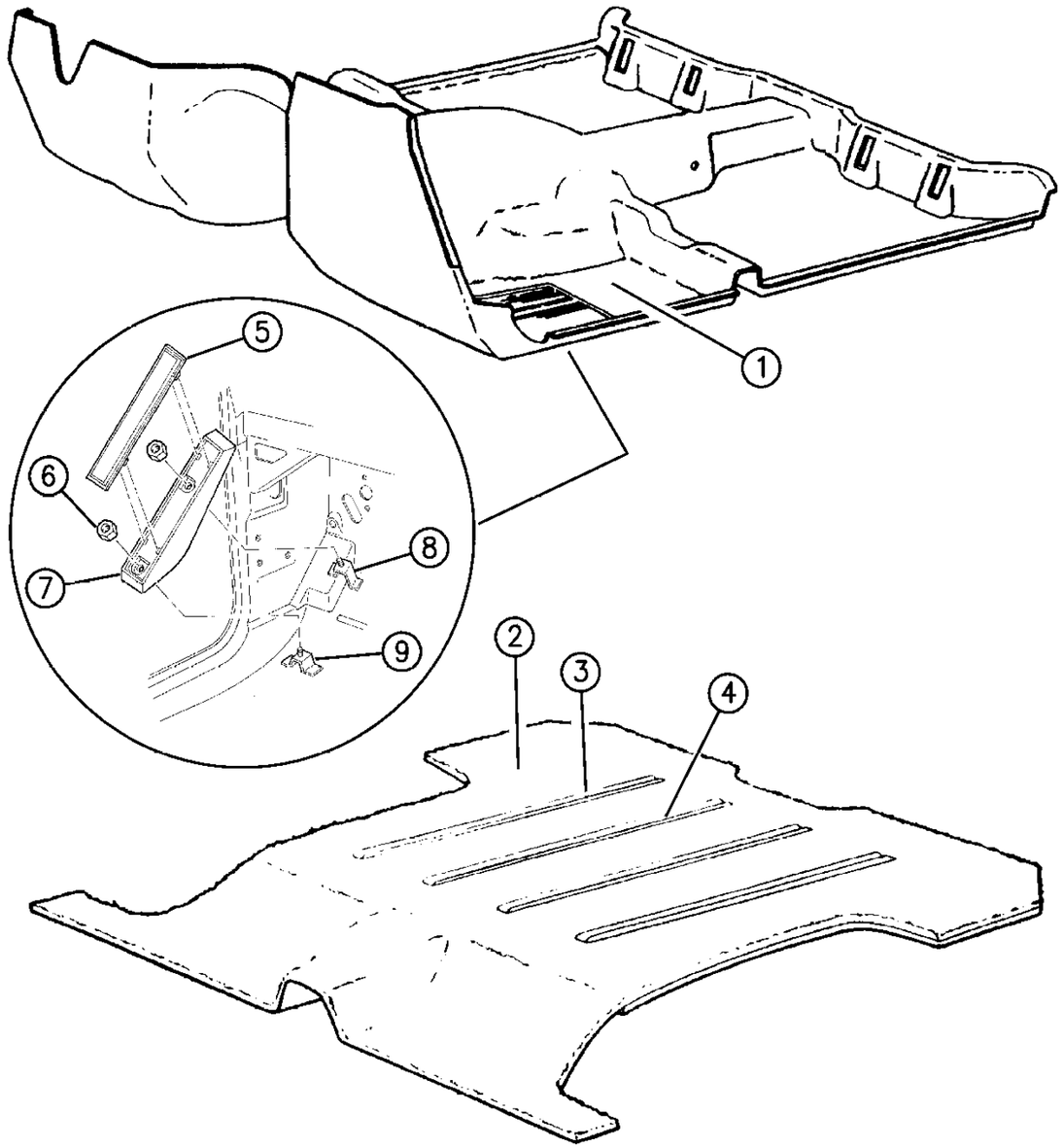

ITEM	PART NUMBER	QTY	BODY	MODEL	DESCRIPTION
1					CARPET, Passenger Area
					12 Ounce (use on Base and Sport model)
					1994,95
	5DZ9 2PD5	1			Quartz
	5DZ9 2PF7	1			Driftwood
					18 Ounce (use on Limited, Laredo or Grand Wagoneer model)
					1994,95
	5DZ9 0PD5	1			Quartz
	5DZ9 0PF7	1			Driftwood
	5DZ9 0PV8	1			Champagne
					16 Ounce
					1996
	5DW1 8SAZ	1			Agate
	5DW1 8SC3	1			Mist Gray
	5DW1 8ST6	1			Saddle
					1996, w/Diesel
	5ER4 6SAZ	1	ZG		Agate
	5ER4 6SC3	1	ZG		Mist Gray
	5ER4 6ST6	1	ZG		Saddle
					1996, R.H.D.
	5EC8 6SAZ	1	ZG		Agate
	5EC8 6SC3	1	ZG		Mist Gray
	5EC8 6ST6	1	ZG		Saddle
					1996, R.H.D., w/Diesel
	5EZ1 3SAZ	1	ZG		Agate
	5EZ1 3SC3	1	ZG		Mist Gray
	5EZ1 3ST6	1	ZG		Saddle
2					CARPET, Cargo Area
					12 Ounce (use on Sport and Base model- w/o skid strips)
	5EB3 2PD5	1			Quartz
	5EB3 2PF7	1			Driftwood
					16 Ounce (use on Limited, Laredo or Grand Wagoneer model, includes skid strips)
					Up to 10-4-93
	5DU1 6PD5	1			Quartz
	5DU1 6PF7	1			Driftwood
	5DU1 6PV8	1			Champagne
					After 10-4-93
	5EB3 6PD5	1			Quartz
	5EB3 6PF7	1			Driftwood
	5EB3 6PV8	1			Champagne
					1995, w/o Skid Strips, (Cancelled in 1995)

MODEL CODES:

72=2 DR Wagon
74=4 DR Wagon
77=Open Body 93" Whlbase
78=Open Body 103" Whlbase - Export
T=2WD
J,N=4WD
U=4WD (RHD)

BODY STYLES:

YJ=Wrangler (4X4) "S"
Weangler (4X4) SE
Wrangler (4X4) Sahara
Wrangler (4X4) Renegade
XJ=Cherokee SE
Cherokee Sport
Cherokee Country
ZJ=Grand Cherokee SE
Grand Cherokee Laredo
Grand Cherolee Limited
ZG=Grand Cherokee European
Y1=Wrangler
X1=Cherokee
Z1=Grand Cherokee
KDX=Vehicles

AR = Use as Required - = Non Illustrated Part P.A.R. = Paint as Required

CARPET - GRAND CHEROKEE AND GRAND WAGONEER - ZJ
Figure IZJ-310

IZJ-310A

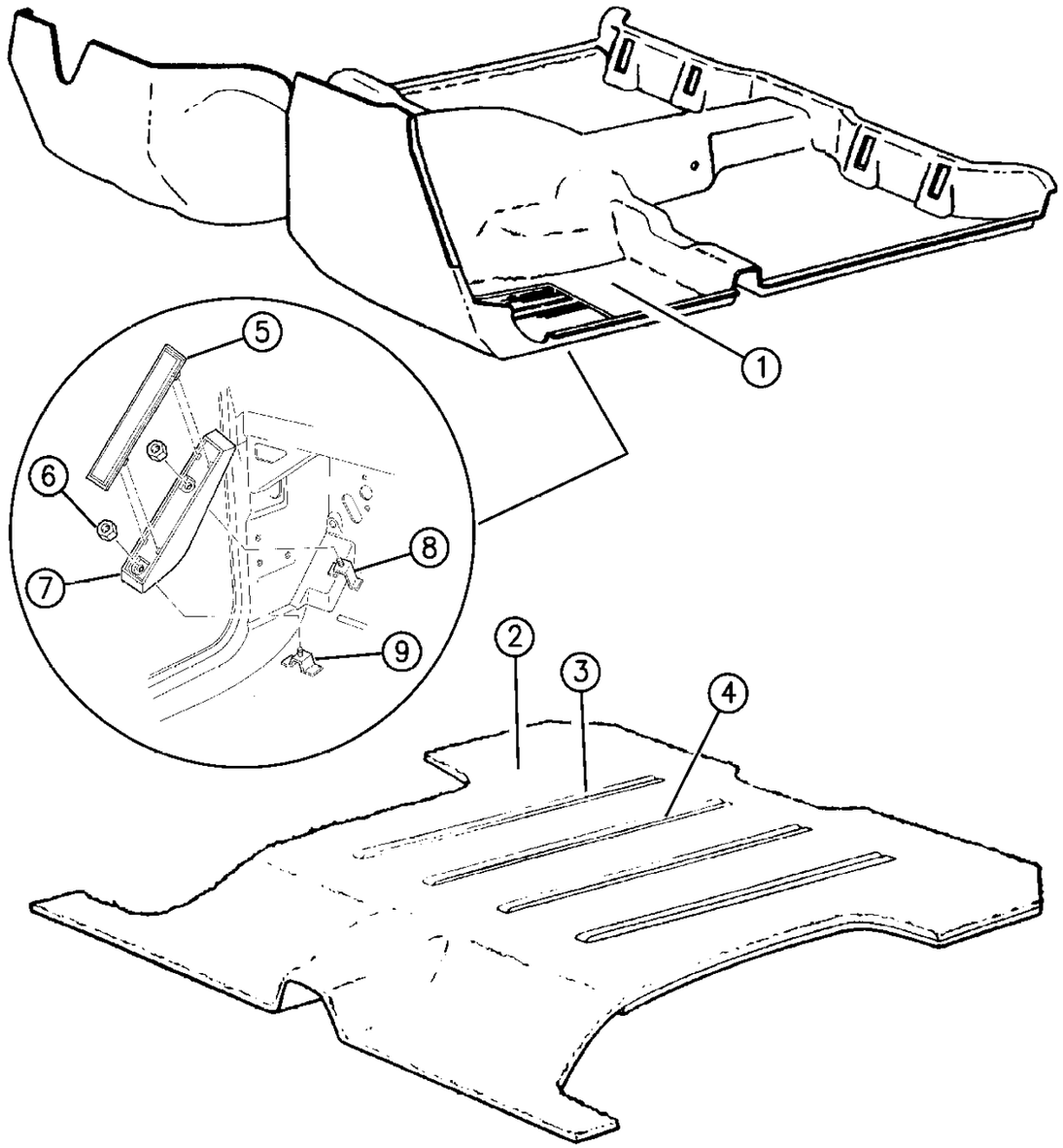

ITEM	PART NUMBER	QTY	BODY	MODEL	DESCRIPTION
	5EK3 6RD5	1			Quartz
	5EK3 6RF7	1			Driftwood
	5EK3 6RV8	1			Champagne
					1996
	5EK3 6SAZ	1			Agate
	5EK3 6SC3	1			Mist Gray
	5EK3 6ST6	1			Saddle
3		4			STRIP, Cargo Floor Skid (serviced in the carpet assembly) ***
4	6033 018	20			FASTENER, Skid Strip To Carpet
5	5521 5941	1			PAD, Footrest
6		2			NUT, .250-20, Not Serviced
7					FOOTREST
	5521 6720	1			
	5535 6691	1		ZG	R.H.D.
8	5529 5768	1			BRACKET, W/Stud, Upper
9	5529 5767	1			BRACKET, w/Stud, Lower
NOTE: The following floor mats are also listed in the accessory catalog. e Adhesive #312.					
-					MAT PACKAGE, Front Floor, w/o Logo, (contains right and left) ***
-	8220 3010	1			Quartz
-	8220 3011	1			Brownstone
-	8220 3008	1			Champagne
	8230 0680	1			Medium Champagne, "ORVIS"
-					MAT PACKAGE, Passenger Area Rear Floor, w/o Logo (consists of 2 mats) ***
-	8220 3009	1			Quartz
-	8220 3012	1			Brownstone
-	8220 3007	1			Champagne
					MAT KIT, Front & Rear ***
					1996, R.H.D.
	5EW1 1SAZ	1	ZG		Agate
	5EW1 1SC3	1	ZG		Mist Gray
	5EW1 1ST6	1	ZG		Saddle
					1996, R.H.D., Diesel
	5EZ2 3SAZ	1	ZG		Agate
	5EZ2 3SC3	1	ZG		Mist Gray
	5EZ2 3ST6	1	ZG		Saddle

MODEL CODES:

72=2 DR Wagon
74=4 DR Wagon
77=Open Body 93" Whlbase
78=Open Body 103" Whlbase - Export
T=2WD
J,N=4WD
U=4WD (RHD)

BODY STYLES:

YJ=Wrangler (4X4) "S"
Weangler (4X4) SE
Wrangler (4X4) Sahara
Wrangler (4X4) Renegade
XJ=Cherokee SE
Cherokee Sport
Cherokee Country
ZJ=Grand Cherokee SE
Grand Cherokee Laredo
Grand Cherolee Limited
ZG=Grand Cherokee European
Y1=Wrangler
X1=Cherokee
Z1=Grand Cherokee
KDX=Vehicles

AR = Use as Required - = Non Illustrated Part P.A.R. = Paint as Required

INSULATION - GRAND CHEROKEE AND GRAND WAGONEER - ZJ
Figure IZJ-320

IZJ-320

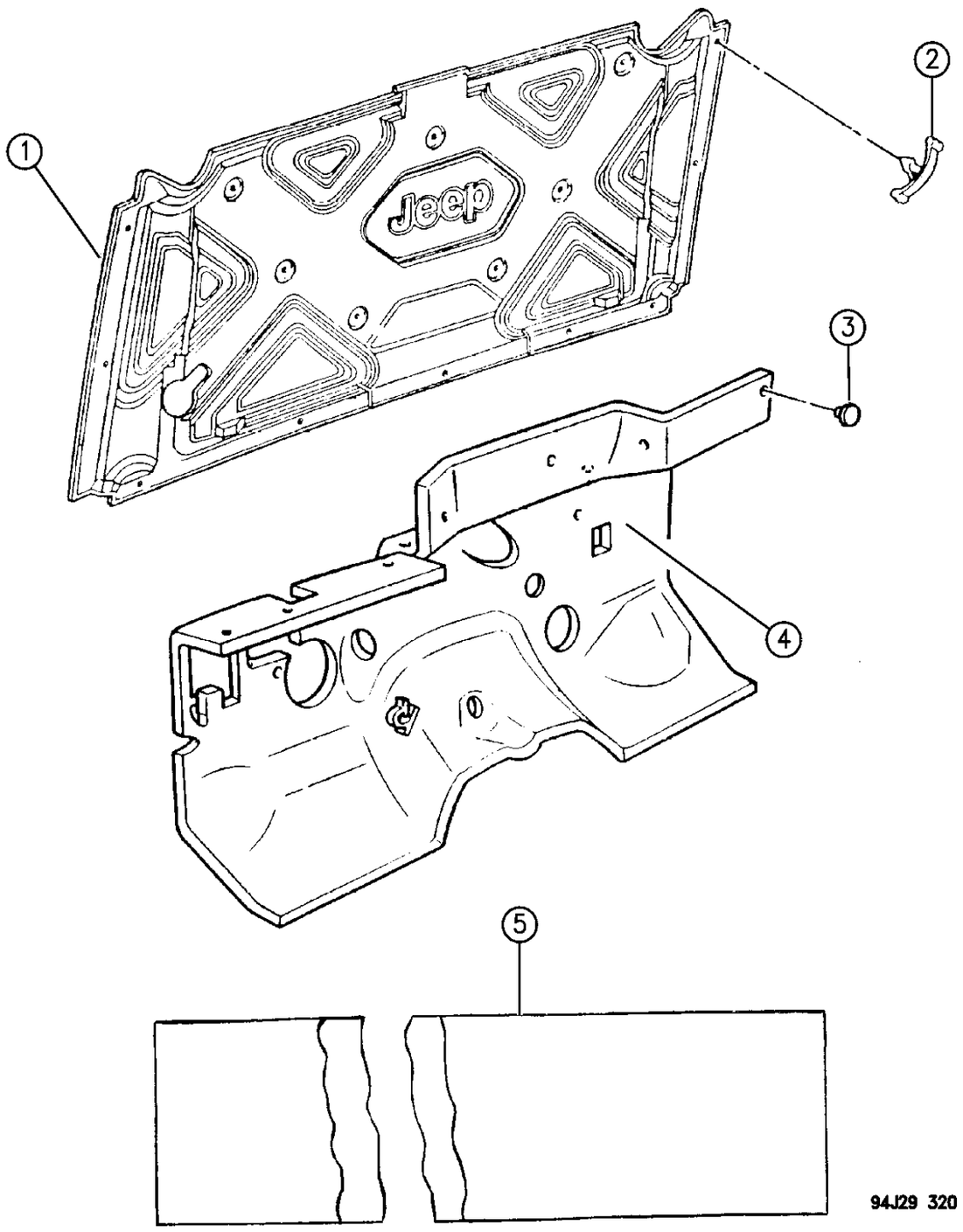

ITEM	PART NUMBER	QTY	BODY	MODEL	DESCRIPTION
1	5521 5330	1			INSULATION, Hood
2	6003 351	16			FASTENER, Hood insulation
3	J308 1054	12			CLIP, Insulation to Dash
4					INSULATION, Dash Inner
	5521 5696	1			1994
	5521 6107	1			1995
	5521 6020	1			1996
	5507 4732	1	ZG		1996, Diesel
5	4386 474	2			SILENCER, Quarter Inner Wheelhouse, Front (3" thick X 4" tall X 8" long)

NOTE: For insulation on trim panels, look up the trim part and if the insulation is serviced it will be listed as a non illustrated part. e Adhesive #312.

MODEL CODES:

72=2 DR Wagon
74=4 DR Wagon
77=Open Body 93" Whlbase
78=Open Body 103" Whlbase - Export
T=2WD
J,N=4WD
U=4WD (RHD)

BODY STYLES:

YJ=Wrangler (4X4) "S"
Weangler (4X4) SE
Wrangler (4X4) Sahara
Wrangler (4X4) Renegade
XJ=Cherokee SE
Cherokee Sport
Cherokee Country
ZJ=Grand Cherokee SE
Grand Cherokee Laredo
Grand Cherolee Limited
ZG=Grand Cherokee European
Y1=Wrangler
X1=Cherokee
Z1=Grand Cherokee
KDX=Vehicles

AR = Use as Required - = Non Illustrated Part P.A.R. = Paint as Required

CARGO COVER AND CARGO LOOPS - GRAND CHEROKEE AND GRAND WAGONEER - ZJ
Figure IZJ-330

IZJ-330A

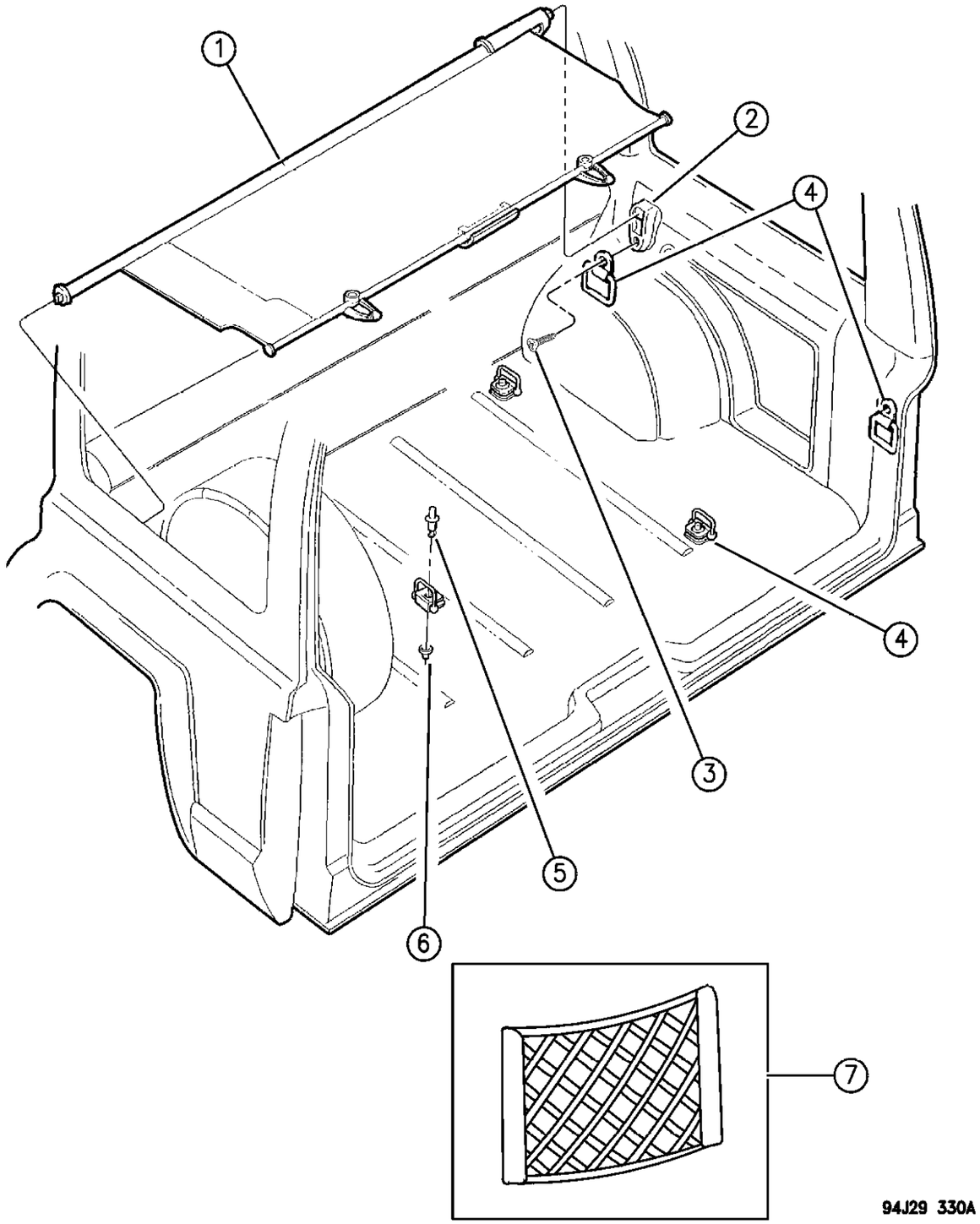

ITEM	PART NUMBER	QTY	BODY	MODEL	DESCRIPTION
1					COVER, Cargo Area
					Used w/small spare tire
					1994
	5DT9 6MD5	1			Quartz
	5DT9 6MF8	1			Driftwood
	5DT9 6MV4	1			Champagne
					1995
	5EK4 2RD5	1			Quartz
	5EK4 2RF8	1			Driftwood
	5EK4 2RV4	1			Champagne
					1996
	5EM1 0SAZ	1			Agate
	5EM1 0SC3	1			Mist Gray
	5EM1 0ST6	1			Saddle
					Used w/large spare tire
					1994
	5DT9 5MD5	1			Quartz
	5DT9 5MF8	1			Driftwood
	5DT9 5MV4	1			Champagne
					1995
	5EK6 9RD5	1			Quartz
	5EK6 9RF8	1			Driftwood
	5EK6 9RV4	1			Champagne
					1996
	5EM0 9SAZ	1			Agate
	5EM0 9SC3	1			Mist Gray
	5EM0 9ST6	1			Saddle
2		2			BRACKET, Cargo Cover (serviced only in the quarter trim panel)
3		2			SCREW, (fastens bracket and trim panel to the sheet metal), not serviced, use #8 - 18 X 1.625
4	5521 5609	4			LOOP ASSEMBLY, Cargo Tie Down ***
5	6035 122	4			RIVET, Cargo Loop Mounting (Black)
6	3420 2365	4			WASHER, Cargo Loop Mounting
7					NET, Rear Floor Cargo Net
	5521 5200	1			1994
	5521 6830	1			1995,96

MODEL CODES:

72=2 DR Wagon
74=4 DR Wagon
77=Open Body 93" Whlbase
78=Open Body 103" Whlbase - Export
T=2WD
J,N=4WD
U=4WD (RHD)

BODY STYLES:

YJ=Wrangler (4X4) "S"
Weangler (4X4) SE
Wrangler (4X4) Sahara
Wrangler (4X4) Renegade
XJ=Cherokee SE
Cherokee Sport
Cherokee Country
ZJ=Grand Cherokee SE
Grand Cherokee Laredo
Grand Cherolee Limited
ZG=Grand Cherokee European
Y1=Wrangler
X1=Cherokee
Z1=Grand Cherokee
KDX=Vehicles

AR = Use as Required - = Non Illustrated Part P.A.R. = Paint as Required

« RETURN TO GROUP INDEX

PANELS, DOOR TRIM - GRAND CHEROKEE AND GRAND WAGONEER - ZJ
Figure IZJ-410

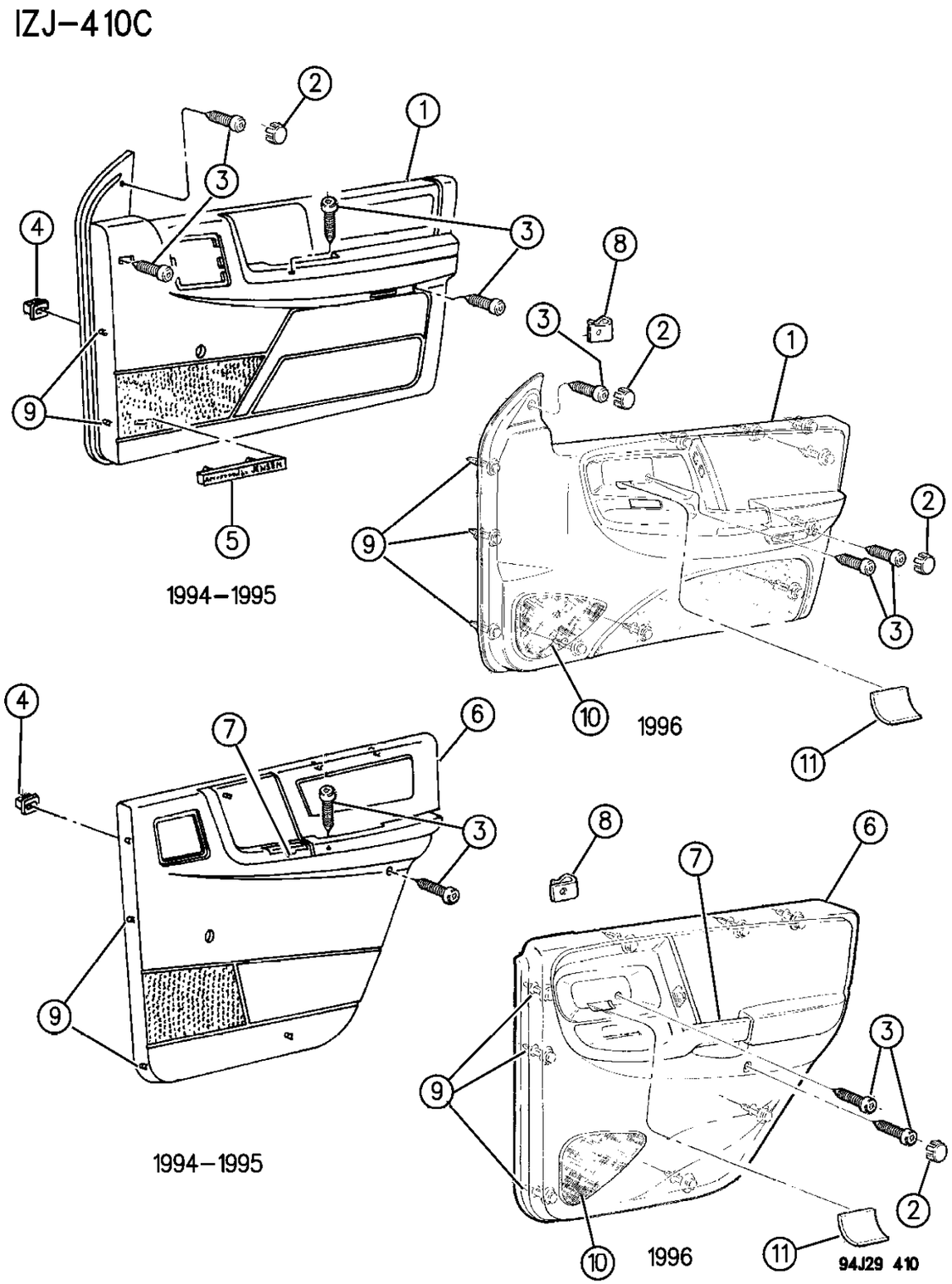

ITEM	PART NUMBER	QTY	BODY	MODEL	DESCRIPTION
1					PANEL, Front Door Trim, (includes retaining pins)
NOTE: The "LIMITED" and "GRAND WAGONEER" door trim panel is serviced w/o the Lamp. See group 8 for lamp. e Adhesive #312.					
1996 Limited front door panel: If vinyl peels or separates from bolster or door handle discolors, use repair kit instead of replacing whole panel. e Adhesive #312.					
					"LIMITED" and "GRAND WAGONEER" Model
					1994,95
	GU64-5 LD5	1			Quartz, (ALD5,BLDW)
	GU64-5 LF8	1			Driftwood, (ALFF,BLFF)
	GU64-5 MV4	1			Champagne, (ALV4,BLV4)
					1996
	PH88-9 SAZ	1			Agate
	PH88-9 SC3	1			Mist Gray
	PH88-9 ST6	1			Saddle
					1996, R.H.D.
	PR70-1 SAZ	1	ZG		Agate
	PR70-1 ST6	1	ZG		Saddle
					1995, "ORVIS"
	LD64-5 RJ4	1			Gold, (DLVJ)
					1996, 'ORVIS'
	PP62-3 SJ4	1			Gold
					1996, LIMITED, BOLSTER, REPAIR KIT
					Right
	5011 400AA	1			Agate
	5278 434AA	1			Mist Gray
	5278 436AA	1			Saddle
	5278 418AA	1			Moss Green
					Left
	5011 401AA	1			Agate
	5278 435AA	1			Mist Gray
	5278 437AA	1			Saddle
	5278 419AA	1			Moss Green
NOTE: The "LAREDO" Door trim panel is serviced w/o the reflector. See REFLECTOR listed below. e Adhesive #312.					
1996 Laredo front door panels: If vinyl peels or separates from bolster or door handle discolors, use repair kit instead of replacing whole panel. e Adhesive #312.					
					"LAREDO" Model
					1994,95
	KG12-3 PD5	1			Quartz, (TLD5)
	KG12-3 PF8	1			Driftwood, (TLFF)
	GU62-3 LD5	1			Quartz, (M5D5,M7D5)
	GU62-3 PF7	1			Driftwood, (M5FF,M7FF)
	GU62-3 PV4	1			Champagne, (M5V4,M7V4)

MODEL CODES:

72=2 DR Wagon
74=4 DR Wagon
77=Open Body 93" Whlbase
78=Open Body 103" Whlbase - Export
T=2WD
J,N=4WD
U=4WD (RHD)

BODY STYLES:

YJ=Wrangler (4X4) "S"
Weangler (4X4) SE
Wrangler (4X4) Sahara
Wrangler (4X4) Renegade
XJ=Cherokee SE
Cherokee Sport
Cherokee Country
ZJ=Grand Cherokee SE
Grand Cherokee Laredo
Grand Cherolee Limited
ZG=Grand Cherokee European
Y1=Wrangler
X1=Cherokee
Z1=Grand Cherokee
KDX=Vehicles

AR = Use as Required - = Non Illustrated Part P.A.R. = Paint as Required

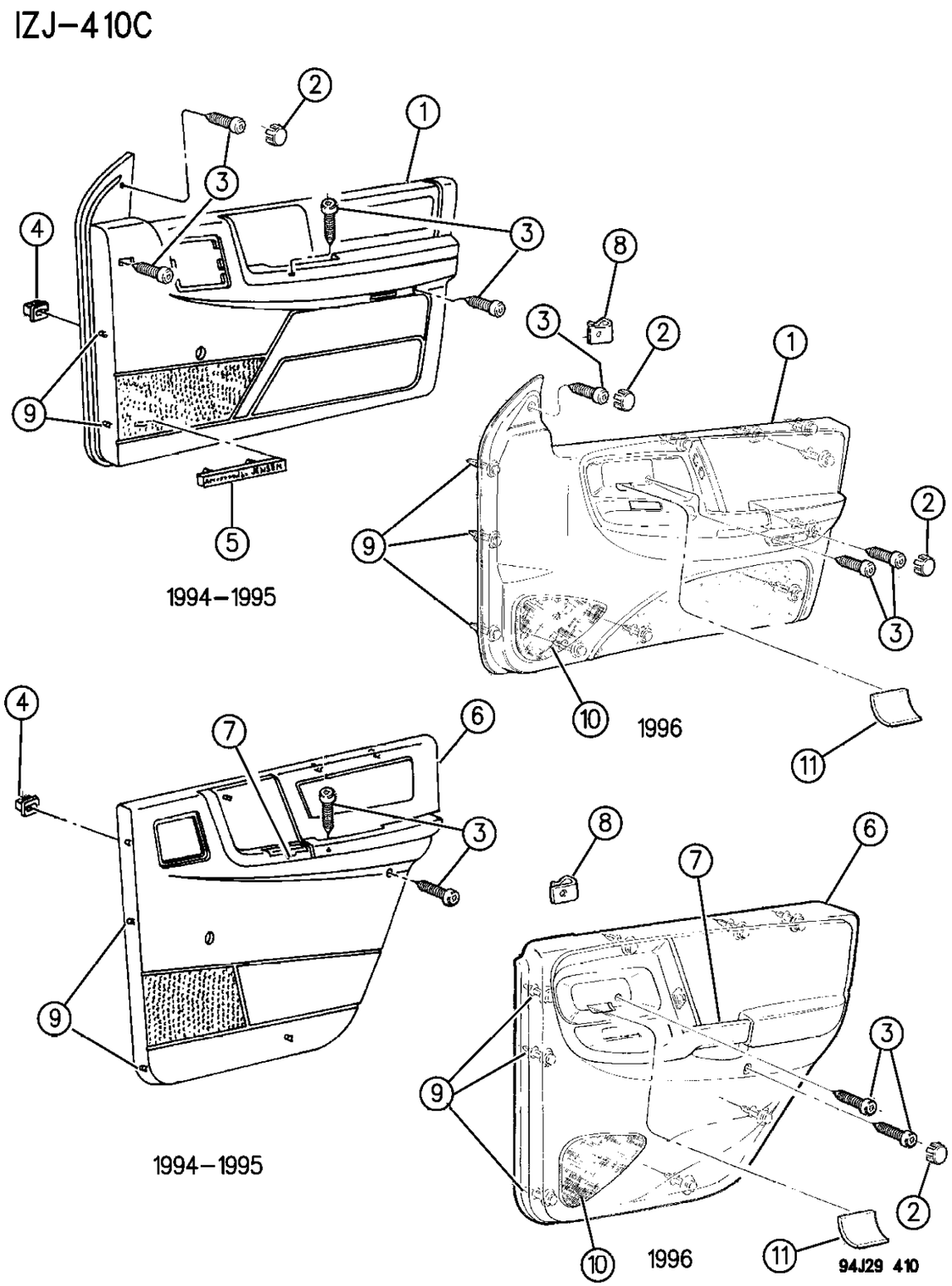

ITEM	PART NUMBER	QTY	BODY	MODEL	DESCRIPTION
					1996, Serviced w/Speaker Grille
					Right, w/o Infinity
	QX98 SAZAA	1			Agate
	QX98 SC3AA	1			Mist Gray
	QX98 ST6AA	1			Saddle
					Right, w/Infinity
	QX62 SAZAA	1			Agate
	QX62 SC3AA	1			Mist Gray
	QX62 ST6AA	1			Saddle
					Left, w/o Infinity
	QX99 SAZAA	1			Agate
	QX99 SC3AA	1			Mist Gray
	QX99 ST6AA	1			Saddle
					Left, w/Infinity
	QX63 SAZAA	1			Agate
	QX63 SC3AA	1			Mist Gray
	QX63 ST6AA	1			Saddle
					1996, R.H.D.
	PR66-7 SAZ	1	ZG		Agate
	PR66-7 ST6	1	ZG		Saddle
					1996, LAREDO, BOLSTER, REPAIR KIT
					Right
	4897 376AA	1			Agate
	4897 378AA	1			Mist Gray
	4897 380AA	1			Saddle
					Left
	4897 377AA	1			Agate
	4897 379AA	1			Mist Gray
	4897 381AA	1			Saddle
					REFLECTOR ASSY., Front Door Trim Panel, LAREDO ***
	5503 1730-1	1			1994,95
	4798 798-9	1			1996
NOTE: The "BASE and SPORT" door trim panel is serviced w/the cover for the lamp/reflector hole. e Adhesive #312.					
					"BASE and SPORT" Model w/Power Windows (less switches)
					1994,95
	GU56-7 PDD	1			Quartz
	GU56-7 PF7	1			Brownstone
					"BASE and SPORT" Model w/o Power Windows
					1994,95
	5AM98-9 LD5	1			Quartz
	5AM98-9 LF8	1			Driftwood

MODEL CODES:

72=2 DR Wagon
74=4 DR Wagon
77=Open Body 93" Whlbase
78=Open Body 103" Whlbase - Export
T=2WD
J,N=4WD
U=4WD (RHD)

BODY STYLES:

YJ=Wrangler (4X4) "S"
Weangler (4X4) SE
Wrangler (4X4) Sahara
Wrangler (4X4) Renegade
XJ=Cherokee SE
Cherokee Sport
Cherokee Country
ZJ=Grand Cherokee SE
Grand Cherokee Laredo
Grand Cherolee Limited
ZG=Grand Cherokee European
Y1=Wrangler
X1=Cherokee
Z1=Grand Cherokee
KDX=Vehicles

AR = Use as Required - = Non Illustrated Part P.A.R. = Paint as Required

PANELS, DOOR TRIM - GRAND CHEROKEE AND GRAND WAGONEER - ZJ
Figure IZJ-410

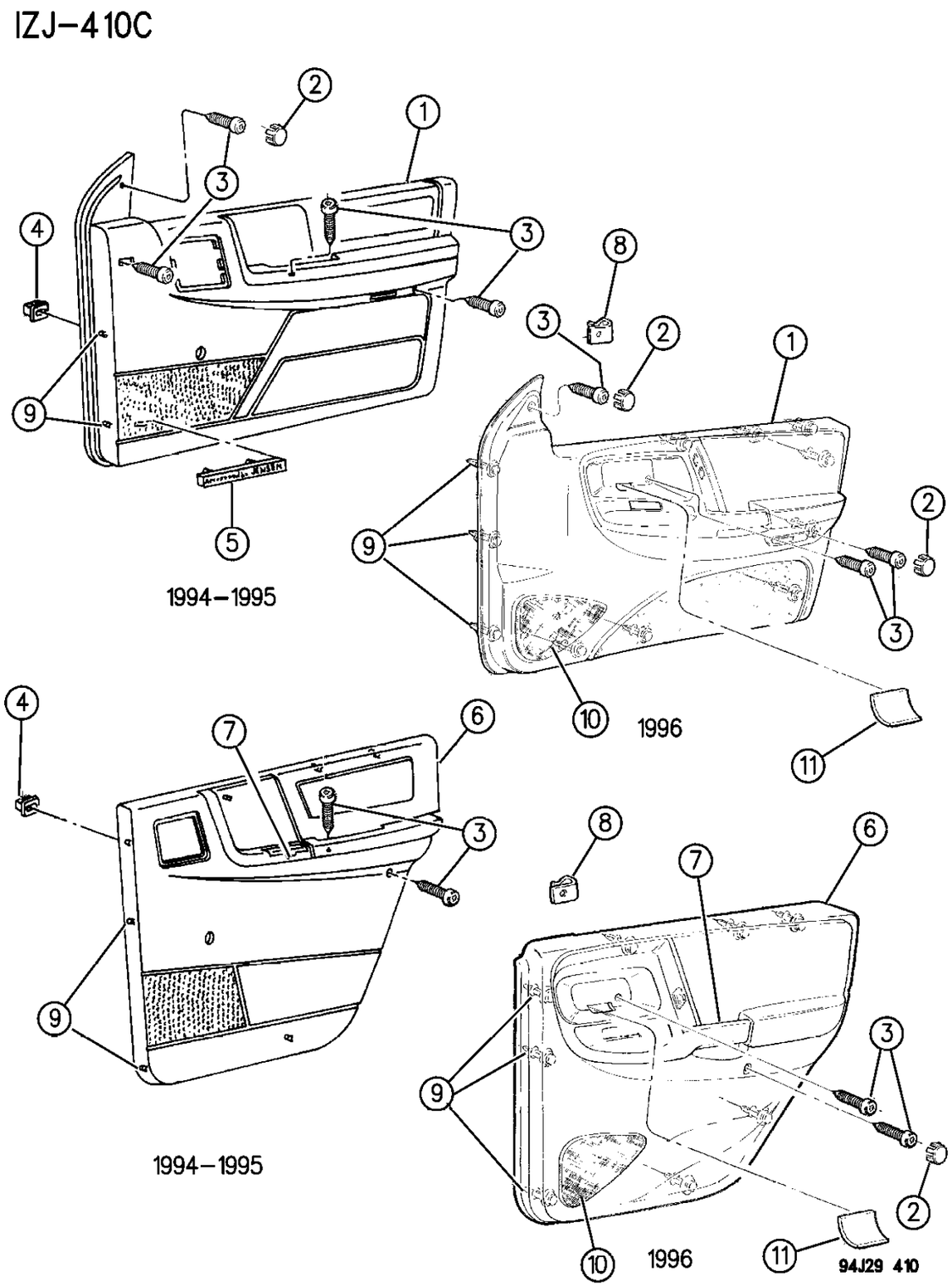

ITEM	PART NUMBER	QTY	BODY	MODEL	DESCRIPTION
-	4720 494-5	1			COVER, Reflector Lamp Front Door Opening (Used on Base and Sport Model (P.A.R.)
2					PLUG
	J400 7443	2			1994,1995
					1996
	5EG4 0SAZ	2			Agate
	5EG4 0SC3	2			Mist Gray
	5EG4 0ST6	2			Saddle
3		AR			SCREW, .164-18x1.00, Not Serviced
4					NUT, Plastic (closed end)
					1994,95
	3420 1872	6			Front Door Trim Panel Attaching
	3420 1872	4			Rear Door Trim Panel Attaching
5	5521 5820	2			NAMEPLATE, Trim Panel, (used w/6 speaker stereo), 1994,95 ***
-					FASTENER, Nameplate, not serviced
6					PANEL, Rear Door Trim, (includes retaining pins)
1996 Limited rear door panel: If vinyl peels or separates from bolster or door handle discolors, use repair kit instead of replacing whole panel. e Adhesive #312.					
					"LIMITED" and "GRAND WAGONEER" Model
					1994,95
	GV18-9 LD5	1			Quartz, (ALD5, BLDW)
	GV18-9 LF8	1			Driftwood, (ALFF,BLFF)
	GV18-9 MV4	1			Champagne, (ALV4,BLV4)
					1995, "ORVIS"
	LD68-9 RJ4	1			Gold, (DLVJ)
					1996, "ORVIS"
	PP64-5 SJ4	1			Gold
					1996, "LIMITED"
	PJ00-1 SAZ	1			Agate
	PJ00-1 SC3	1			Mist Gray
	PJ00-1 ST6	1			Saddle
					1996, LIMITED, BOLSTER REPAIR KIT
					Right
	5278 428AA	1			Agate
	5278 452AA	1			Mist Gray
	5278 446AA	1			Saddle
	5278 430AA	1			Moss Green
					Left
	5278 429AA	1			Agate
	5278 453AA	1			Mist Gray
	5278 447AA	1			Saddle
	5278 431AA	1			Moss Green

MODEL CODES:

72=2 DR Wagon
74=4 DR Wagon
77=Open Body 93" Whlbase
78=Open Body 103" Whlbase - Export
T=2WD
J,N=4WD
U=4WD (RHD)

BODY STYLES:

YJ=Wrangler (4X4) "S"
Weangler (4X4) SE
Wrangler (4X4) Sahara
Wrangler (4X4) Renegade
XJ=Cherokee SE
Cherokee Sport
Cherokee Country
ZJ=Grand Cherokee SE
Grand Cherokee Laredo
Grand Cherolee Limited
ZG=Grand Cherokee European
Y1=Wrangler
X1=Cherokee
Z1=Grand Cherokee
KDX=Vehicles

AR = Use as Required - = Non Illustrated Part P.A.R. = Paint as Required

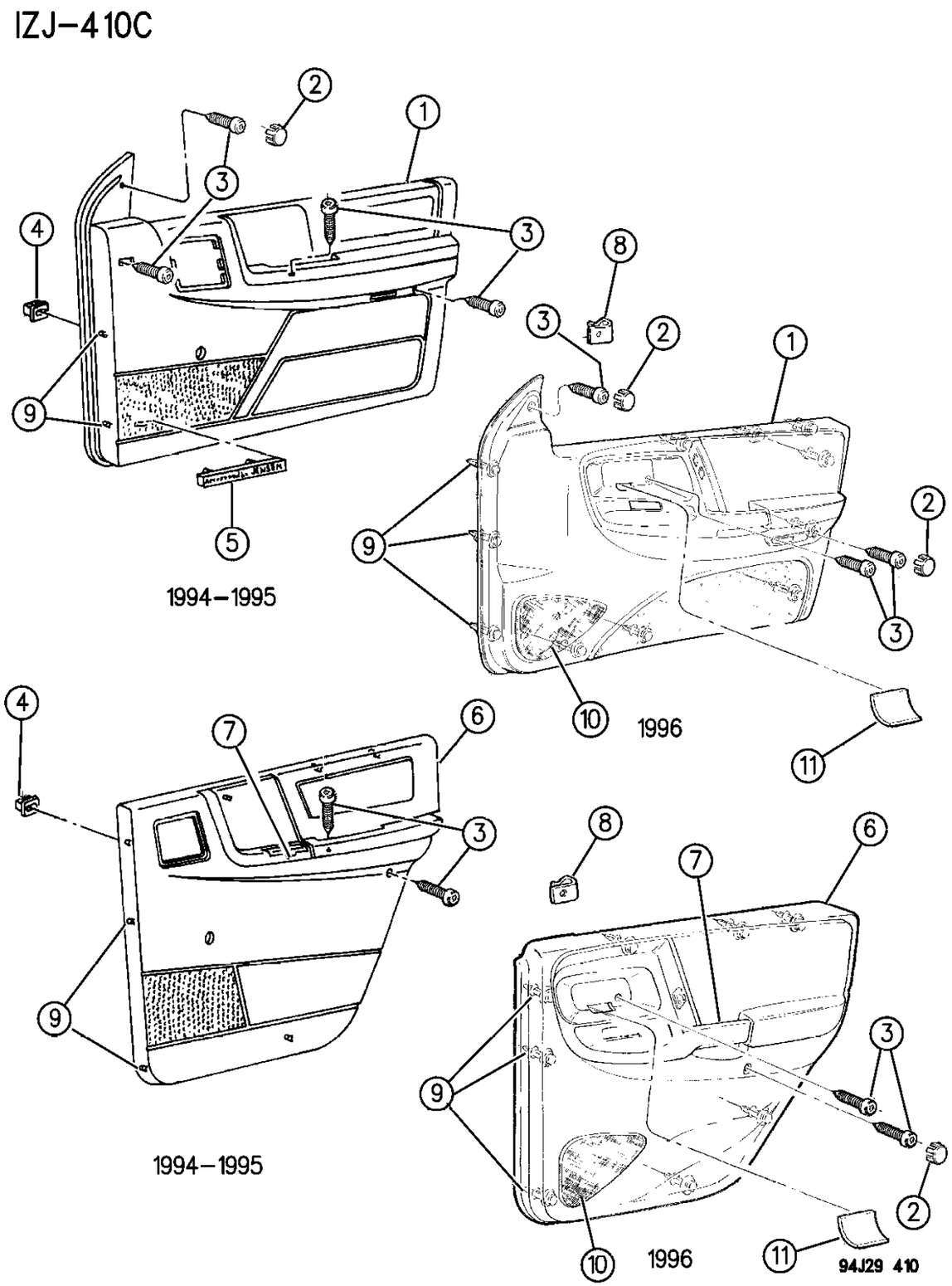

ITEM	PART NUMBER	QTY	BODY	MODEL	DESCRIPTION
NOTE: A window switch cover is included w/"LAREDO" and "Sport" panels. e Adhesive #312.					
1996 Laredo rear door panels: If vinyl peels or separates from bolster or door handle discolors, use repair kit instead of replacing whole panel. e Adhesive #312.					
					w/LAREDO Model, w/Power Windows
					1994,95
	KG14-5 PD5	1			Quartz, (TLD5)
	KG14-5 PF8	1			Driftwood, (TLFF)
					"LAREDO" Model, (w/ or w/o Power Windows)
					1994,95
	4720 614-5	1			Quartz, (M5D5,M7D5)
	4720 616-7	1			Driftwood, (M5FF,M7FF)
	4741 666-7	1			Champagne, (M5V4,M7V4)
					1996
					Right
	QX86 SAZAA	1			Agate
	QX86 SC3AA	1			Mist Gray
	QX86 ST6AA	1			Saddle
					Left
	QX87 SAZAA	1			Agate
	QX87 SC3AA	1			Mist Gray
	QX87 ST6AA	1			Saddle
					1996, LAREDO, BOLSTER REPAIR KIT
					Right
	4897 254AA	1			Agate
	4897 256AA	1			Mist Gray
	4897 258AA	1			Saddle
					Left
	4897 255AA	1			Agate
	4897 257AA	1			Mist Gray
	4897 259AA	1			Saddle
					"BASE and SPORT" Models, (w/ or w/o Power Windows)
					1994,95
	4720 604-5	1			Medium Quartz
	4720 606-7	1			Dark Driftwood
-					PIN, Door Trim Panel Retaining, Yellow
	6502 907	AR			1994-95
7		1			ASHTRAY ASSEMBLY, Rear Door ***
	4720 574-5	1			1994-95
Ashtray not used in 1996. e Adhesive #312.					
	4773 436-7	1			Used with Gold trim panel, DLVJ.
	4773 422	1			MEDALLION, (DLVJ)
8	0152 490	1			U-NUT

MODEL CODES:

72=2 DR Wagon
74=4 DR Wagon
77=Open Body 93" Whlbase
78=Open Body 103" Whlbase - Export
T=2WD
J,N=4WD
U=4WD (RHD)

BODY STYLES:

YJ=Wrangler (4X4) "S"
Weangler (4X4) SE
Wrangler (4X4) Sahara
Wrangler (4X4) Renegade
XJ=Cherokee SE
Cherokee Sport
Cherokee Country
ZJ=Grand Cherokee SE
Grand Cherokee Laredo
Grand Cherolee Limited
ZG=Grand Cherokee European
Y1=Wrangler
X1=Cherokee
Z1=Grand Cherokee
KDX=Vehicles

AR = Use as Required - = Non Illustrated Part P.A.R. = Paint as Required

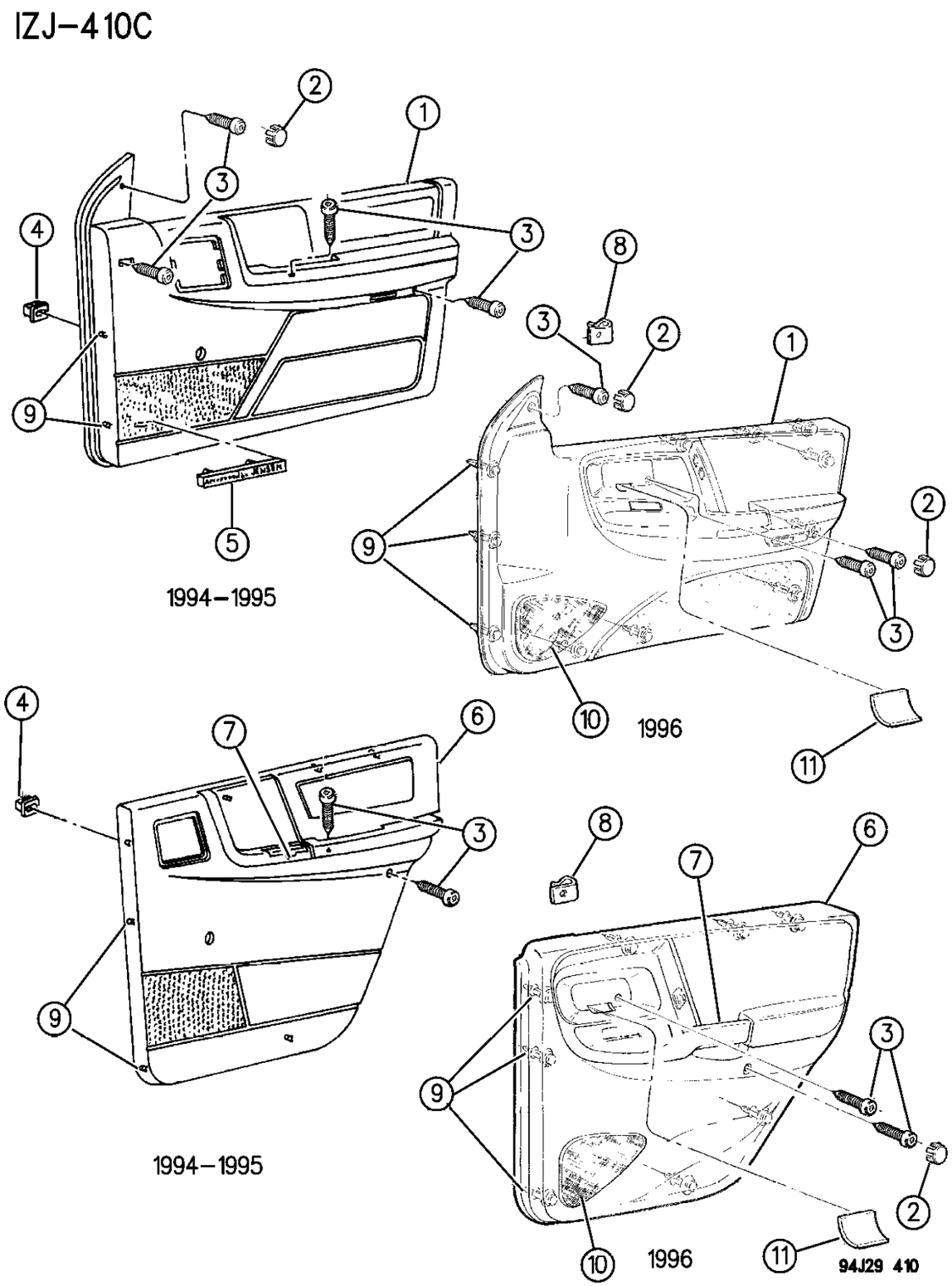

ITEM	PART NUMBER	QTY	BODY	MODEL	DESCRIPTION
9					PUSH PIN, Door Trim Panel Retaining ***
	6502 907	AR			1994,95
	6504 014	AR			1996
10					GRILLE, Speaker
					Front or Rear
					1996
	PH94-5 SAZ	1			Agate
	PH94-5 SC3	1			Mist Gray
	PH94-5 ST6	1			Saddle
					Front Only 'Infinity Gold'
					1996
	PH92-3 SAZ	1			Agate
	PH92-3 SC3	1			Mist Gray
	PH92-3 ST6	1			Saddle
					1996, Right
	PH92 ST6	1			Gold, "ORVIS"
	PH93 ST6	1			Gold, "ORVIS"
-	5521 6704	1			NAMEPLATE, 'INFINITY GOLD' ***
11	5EH94-5 SAZ	1			COVER, Bezel, Door Remote Handle

NOTE: Switch Bezel Comes With Door Panel e Adhesive #312.
NOTE: For switches and lamps see group 8. e Adhesive #312.
NOTE: 1994-95 Bezels and Handles See Group 23C. For 1996 see Item #11 of this Illustration. e Adhesive #312.

MODEL CODES:

72=2 DR Wagon
74=4 DR Wagon
77=Open Body 93" Whlbase
78=Open Body 103" Whlbase - Export
T=2WD
J,N=4WD
U=4WD (RHD)

BODY STYLES:

YJ=Wrangler (4X4) "S"
Weangler (4X4) SE
Wrangler (4X4) Sahara
Wrangler (4X4) Renegade
XJ=Cherokee SE
Cherokee Sport
Cherokee Country
ZJ=Grand Cherokee SE
Grand Cherokee Laredo
Grand Cherolee Limited
ZG=Grand Cherokee European
Y1=Wrangler
X1=Cherokee
Z1=Grand Cherokee
KDX=Vehicles

AR = Use as Required - = Non Illustrated Part P.A.R. = Paint as Required

SEAT COVERS AND SEAT ASSEMBLIES - FRONT SEAT -1994-95 GRAND CHEROKEE AND GRAND WAGONEER - ZJ
Figure IZJ-510

IZJ-510

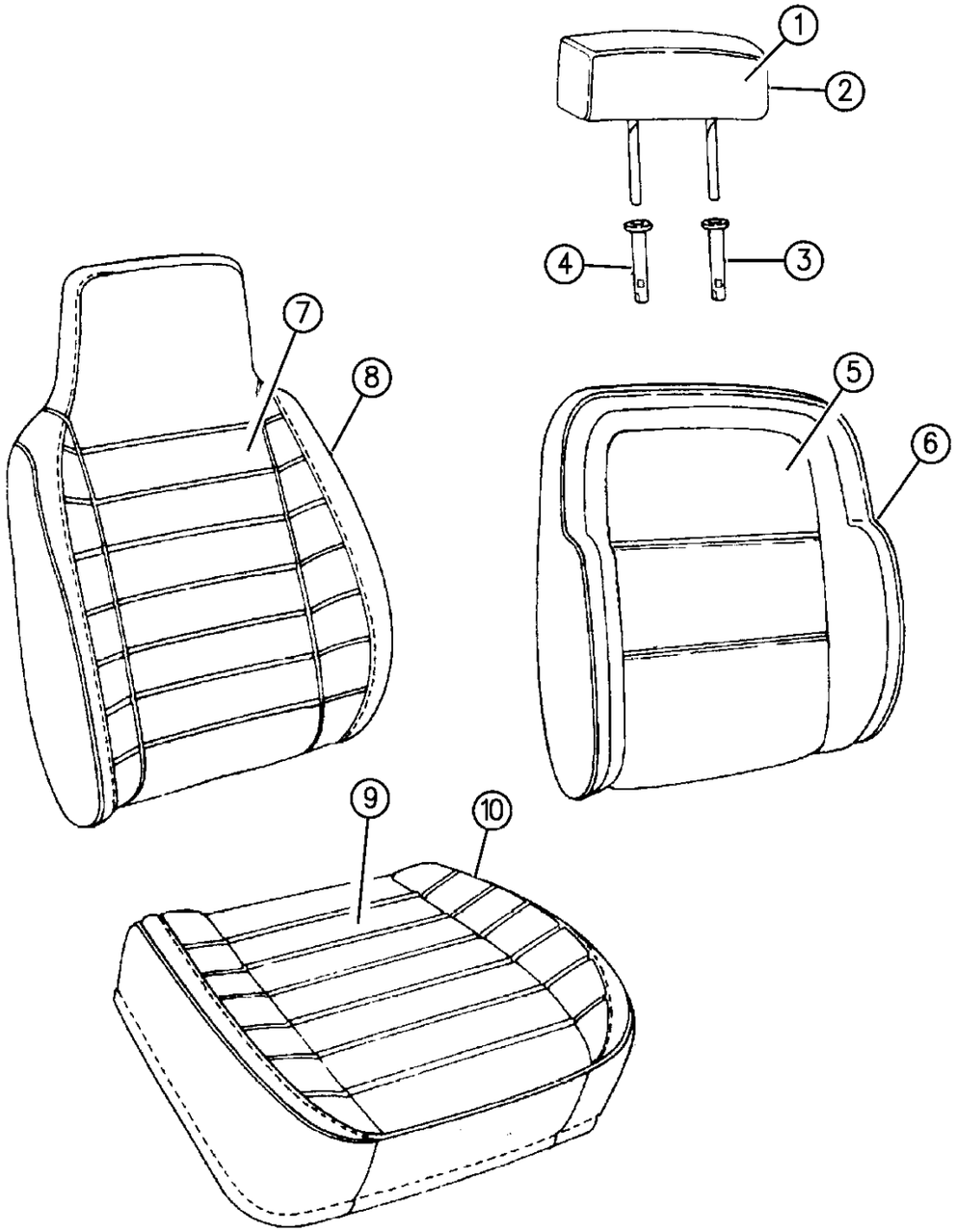

ITEM	PART NUMBER	QTY	BODY	MODEL	DESCRIPTION
1					COVER, Headrest
					w/AL, TL, DL - TRIM CODE
					Up to 7-25-94
	GS50 LD5	2			Quartz, (ALD5, TLD5)
	GS50 LF8	2			Driftwood, (ALFF, TLFF)
	GS50 MV4	2			Champagne, (ALV4, DLVJ)
					After 7-25-94
	MW95 PD5	2			Quartz, (ALD5, TLD5)
	MW95 PF8	2			Driftwood, (ALFF, TLFF)
	MW95 PV4	2			Champagne, (ALV4, DLV4)
					w/ABE - Export Equipment Package
					UP to 7-25-94
	KP23 PD5	2			Quartz, (ALD5)
	KP23 PF8	2			Driftwood, (ALFF)
	KP23 PV4	2			Champagne, (ALV4)
					After 7-25-94
	5EN9 0PD5	2			Quartz, (ALD5), EUROPE
	5EN9 0PF8	2			Driftwood, (ALFF), EUROPE
	5EN9 0PV4	2			Champagne, (ALV4), EUROPE
					w/BL - TRIM CODE
					Up to 7-25-94
	HG77 MW8	2			Quartz, (BLDW)
	HG77 MF8	2			Driftwood, (BLFF)
	HG77 MV4	2			Champagne, (BLV4)
					After 7-25-94
	5EN9 2PW8	2			Quartz, (BLDW)
	5EN9 2PF8	2			Driftwood, (BLFF)
	5EN9 2PV4	2			Champagne, (BLV4)
					w/ABE - Export Equipment Package
					Up to 7-25-94
	KP24 PF8	2			Driftwood, (BLFF)
	KP24 PV4	2			Champagne, (BLV4)
	KP24 PW8	2			Quartz, (BLDW)
					After 7-25-94
	5EN9 6PF8	2			Driftwood, (BLFF)
	5EN9 6PV4	2			Champagne, (BLV4)
	5EN9 6PW8	2			Quartz, (BLDW)
					w/M7 - TRIM CODE
	KP21 PD5	2			Quartz, (M7D5) EUROPE
	KP21 PF7	2			Brownstone, (M7FF), EUROPE
	KP21 PV4	2			Champagne, (M7V4) EUROPE
-	3500 2146	2			STIFFENER, Headrest (For Trim Code AL and BL) ***

MODEL CODES:

72=2 DR Wagon
74=4 DR Wagon
77=Open Body 93" Whlbase
78=Open Body 103" Whlbase - Export
T=2WD
J,N=4WD
U=4WD (RHD)

BODY STYLES:

YJ=Wrangler (4X4) "S"
Weangler (4X4) SE
Wrangler (4X4) Sahara
Wrangler (4X4) Renegade
XJ=Cherokee SE
Cherokee Sport
Cherokee Country
ZJ=Grand Cherokee SE
Grand Cherokee Laredo
Grand Cherolee Limited
ZG=Grand Cherokee European
Y1=Wrangler
X1=Cherokee
Z1=Grand Cherokee
KDX=Vehicles

AR = Use as Required - = Non Illustrated Part P.A.R. = Paint as Required

SEAT COVERS AND SEAT ASSEMBLIES - FRONT SEAT -1994-95 GRAND CHEROKEE AND GRAND WAGONEER - ZJ
Figure IZJ-510

IZJ-510

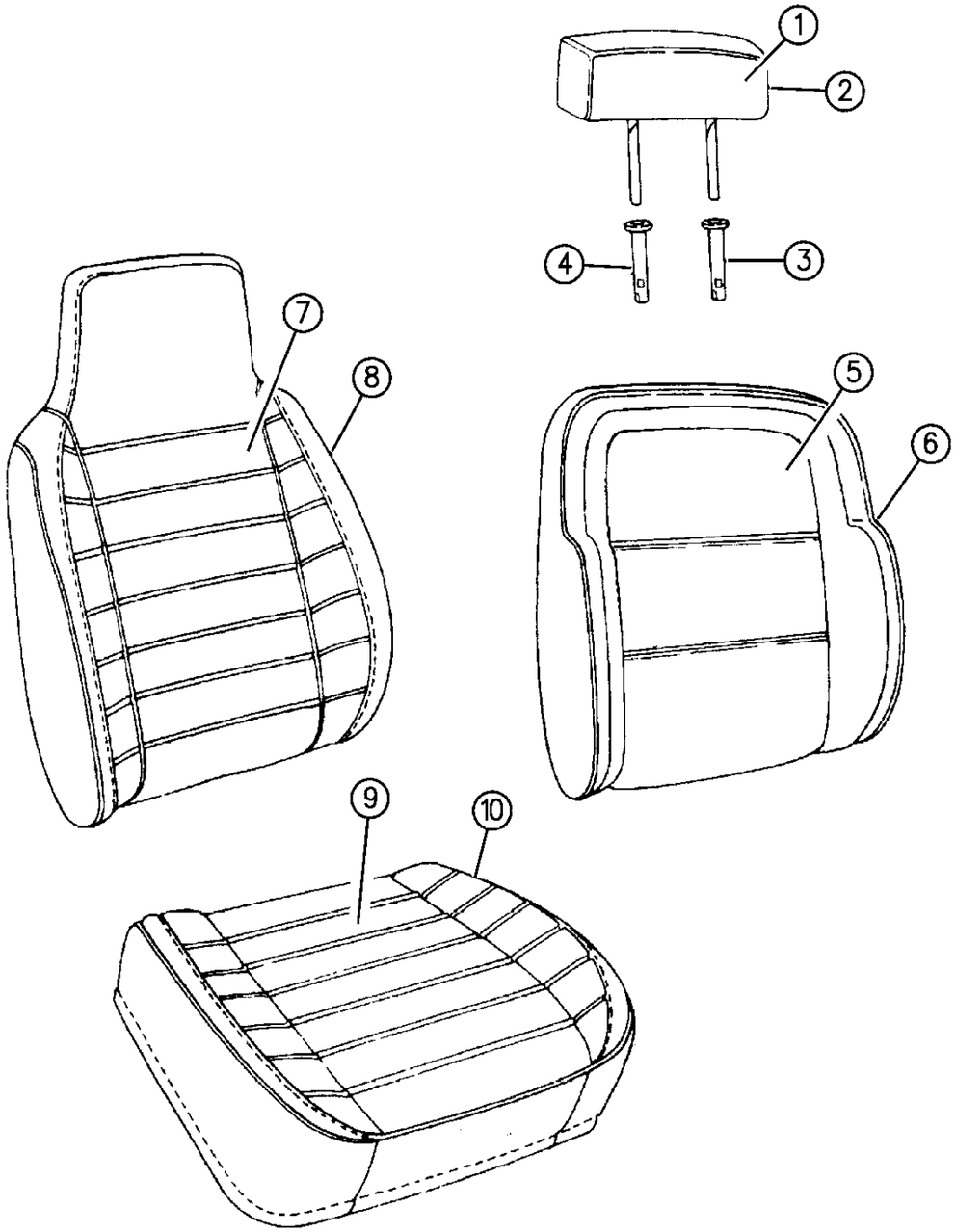

ITEM	PART NUMBER	QTY	BODY	MODEL	DESCRIPTION
2					HEADREST, w/Pad and Cover
					w/AL,TL,DL- TRIM CODE
					Up to 7-25-94
	KJ28 MD5	2			Quartz, (ALD5,TLD5)
	KJ28 MF8	2			Driftwood, (ALFF,TLFF)
	KJ28 MV4	2			Champagne, (ALV4, DLVJ)
					After 7-25-94
	MW92 PD5	2			Quartz, (ALD5, TLD5)
	MW92 PF8	2			Driftwood, (ALFF, TLFF)
	MW92 PV4	2			Champagne, (ALV4, DLV4)
					w/ABE - Export Equipment Package (Long Post)
					Up to 7-25-94
	KP13 PD5	2			Quartz, (ALD5) European
	KP13 PF8	2			Driftwood, (ALFF) European
	KP13 PV4	2			Champagne, (ALV4) European
					After 7-25-94
	MW96 PD5	2			Quartz, (ALD5), EUROPE
	MW96 PF8	2			Driftwood, (ALFF), EUROPE
	MW96 PV4	2			Champagne, (ALV4), EUROPE
					w/BL - TRIM CODE
					Up to 7-25-94
	KJ29 MW8	2			Quartz, (BLDW)
	KJ29 MF8	2			Driftwood, (BLFF)
	KJ29 MV4	2			Champagne, (BLV4)
					After 7-25-94
	5EN7 6PW8	2			Quartz, (BLDW)
	5EN7 6PF8	2			Driftwood, (BLFF)
	5EN7 6PV4	2			Champagne, (BLV4)
					w/ABE - Export Equipment Package (Long Post)
					Up to 7-25-94
	KP18 PF8	2			Driftwood, (BLFF) European
	KP18 PV4	2			Champagne, (BLV4) European
	KP18 PW8	2			Quartz, (BLDW) European
					After 7-25-94
	5EN9 4PF8	2			Driftwood, (BLFF), EUROPE
	5EN9 4PV4	2			Champagne, (BLV4), EUROPE
	5EN9 4PW8	2			Quartz, (BLDW), EUROPE
					w/M7 - TRIM CODE (Long Post)
	KJ30 PD5	2			Quartz, (M7D5), European
	KJ30 PF7	2			Brownstone, (M7FF), European
	KJ30 PV4	2			Champagne, (M7V4) European

MODEL CODES:

72=2 DR Wagon
74=4 DR Wagon
77=Open Body 93" Whlbase
78=Open Body 103" Whlbase - Export
T=2WD
J,N=4WD
U=4WD (RHD)

BODY STYLES:

YJ=Wrangler (4X4) "S"
Weangler (4X4) SE
Wrangler (4X4) Sahara
Wrangler (4X4) Renegade
XJ=Cherokee SE
Cherokee Sport
Cherokee Country
ZJ=Grand Cherokee SE
Grand Cherokee Laredo
Grand Cherolee Limited
ZG=Grand Cherokee European
Y1=Wrangler
X1=Cherokee
Z1=Grand Cherokee
KDX=Vehicles

AR = Use as Required - = Non Illustrated Part P.A.R. = Paint as Required

SEAT COVERS AND SEAT ASSEMBLIES - FRONT SEAT -1994-95 GRAND CHEROKEE AND GRAND WAGONEER - ZJ
Figure IZJ-510

IZJ-510

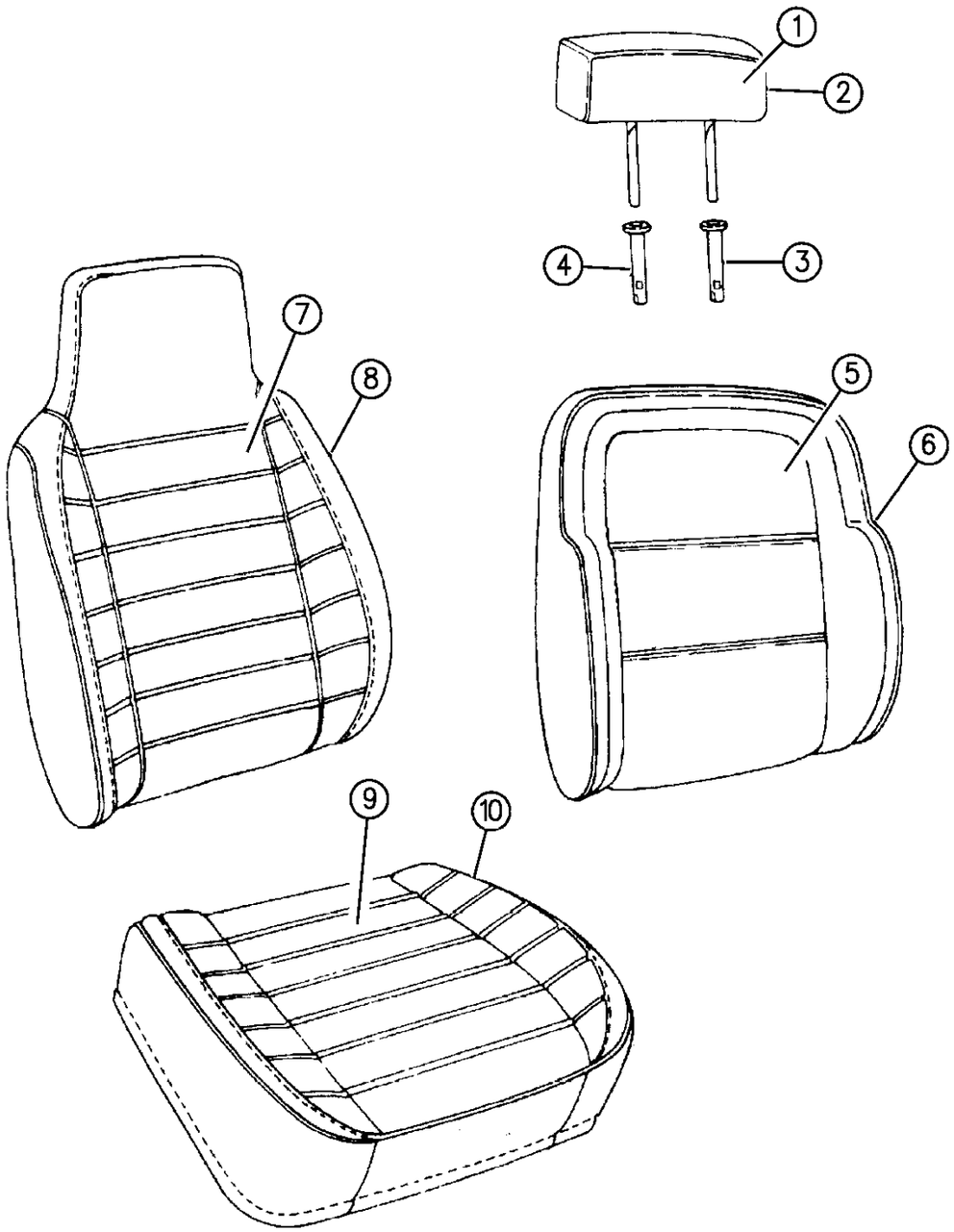

ITEM	PART NUMBER	QTY	BODY	MODEL	DESCRIPTION
-	4798 107	AR			SLEEVE, (Used Inside Headrest Pad, Slips Over Post at Bottom of 'U' Section)
3	4723 834	AR			CYLINDER, (Service w/Latch only)
4	4723 834	AR			CYLINDER, w/Latch
5					COVER, Seat Back
					w/AL - Trim Code
					Up to 7-25-94
	GV69 LD5	2			Quartz, (ALD5)
	GV69 LF8	2			Driftwood, (ALFF)
	GV69 MV4	2			Champagne, (ALV4)
					After 7-25-94
	MW90 PD5	2			Quartz, (ALD5)
	MW90 PF8	2			Driftwood, (ALFF)
	MW90 PV4	1			Champagne, (ALV4)
					w/BL - Trim Code
	HG43 MW8	2			Quartz, (BLDW)
	HG43 MF8	2			Driftwood, (BLFF)
	HG43 MV4	2			Champagne, (BLV4)
					w/M7 - Trim Code
	HG41 MD5	2			Quartz, (M7D5), EUROPE
	HG41 MF7	2			Brownstone, (M7FF), EUROPE
	HG41 PV4	2			Champagne, (M7V4) EUROPE
					w/TL - Trim Code
	KP54 PD5	2			Quartz, (TLD5)
	KP54 PF8	2			Driftwood, (TLFF)
					w/DL Trim Code
	MC20 RJ4	2			Gold, 1995, (DLVJ)
6					BACK, w/Spring/Frame Pad and Cover
					w/AL - Trim Code
					Up to 7-25-94
	HG80-1 MD5	1			Quartz, (ALD5)
	HG80-1 MF8	1			Driftwood, (ALFF)
	HG80-1 MV4	1			Champagne, (ALV4)
					After 7-25-94
	MW88-9 PD5	1			Quartz, (ALD5)
	MW88-9 PF8	1			Driftwood, (ALFF)
	MW88-9 PV4	1			Champagne, (ALV4)
					w/BL - Trim Code
	HG82-3 MW8	1			Quartz, (BLDW)
	HG82-3 MF8	1			Driftwood, (BLFF)
	HG82-3 MV4	1			Champagne, (BLV4)
					w/M7 - Trim Code

MODEL CODES:

72=2 DR Wagon
74=4 DR Wagon
77=Open Body 93" Whlbase
78=Open Body 103" Whlbase - Export
T=2WD
J,N=4WD
U=4WD (RHD)

BODY STYLES:

YJ=Wrangler (4X4) "S"
Weangler (4X4) SE
Wrangler (4X4) Sahara
Wrangler (4X4) Renegade
XJ=Cherokee SE
Cherokee Sport
Cherokee Country
ZJ=Grand Cherokee SE
Grand Cherokee Laredo
Grand Cherolee Limited
ZG=Grand Cherokee European
Y1=Wrangler
X1=Cherokee
Z1=Grand Cherokee
KDX=Vehicles

AR = Use as Required - = Non Illustrated Part P.A.R. = Paint as Required

SEAT COVERS AND SEAT ASSEMBLIES - FRONT SEAT -1994-95 GRAND CHEROKEE AND GRAND WAGONEER - ZJ
Figure IZJ-510

IZJ-510

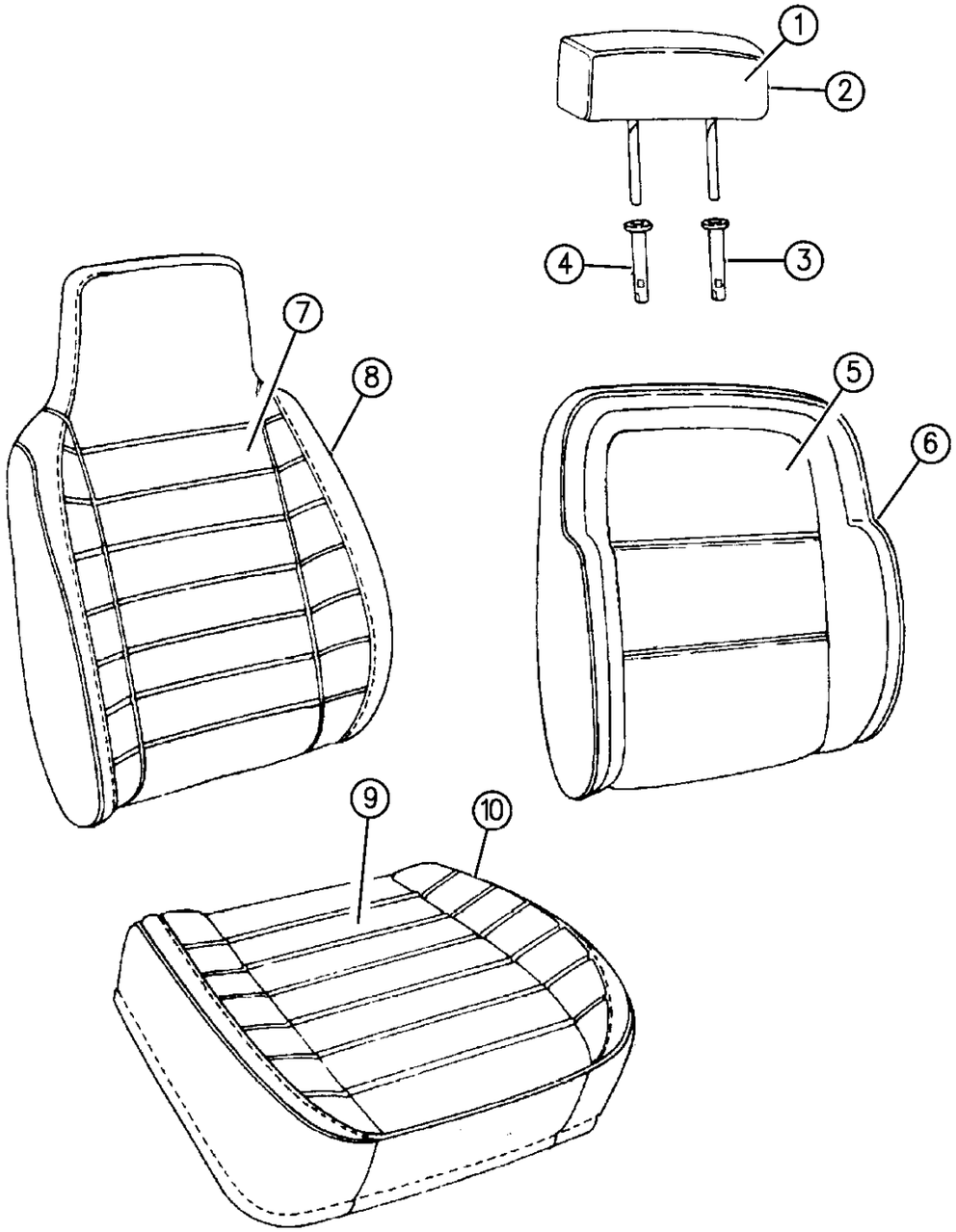

ITEM	PART NUMBER	QTY	BODY	MODEL	DESCRIPTION
	HG78-9 MD5	1			Quartz, (M7D5), EUROPE
	HG78-9 MF7	1			Brownstone, (M7FF), EUROPE
	HG78-9 PV4	1			Champagne, (M7VV) EUROPE
					w/TL - Trim Code
	KP52-3 PD5	1			Quartz, (TLD5)
	KP52-3 PF8	1			Driftwood, (TLFF)
					w/DL - Trim Code
	MC22-3 RJ4	1			Gold, 1995, (DLVJ)
7					COVER, Seat Back
					w/J5 - Trim Code
	GV67 LD5	2			Quartz, (J5D5)
	GV67 LF7	2			Brownstone, (J5FF)
					w/M5 - Trim Code
	HM85 LD5	2			Quartz, (M5D5)
	HM85 LF3	2			Brownstone, (M5FF)
	HM85 PV4	2			Champagne, (M5V4)
8					BACK, w/Spring/Frame Pad and Cover
					w/J5 - Trim Code
	GR56-7 LD5	1			Quartz, (J5D5)
	GR56-7 LF7	1			Brownstone, (J5FF)
					w/M5 - Trim Code
	GR58-9 LD5	1			Quartz, (M5D5)
	GR58-9 LF3	1			Brownstone, (M5FF)
	GR58-9 PV4	1			Champagne, (M5V4)
9					COVER, Cushion
					w/J5 - Trim Code
	GP98-9 LD5	1			Quartz, (J5D5)
	GP98-9 LF7	1			Brownstone, (J5FF)
					w/M5 - Trim Code
	GR00-1 LD5	1			Quartz, (M5D5, M7D5)
	GR00-1 LF3	1			Brownstone, (M5FF)
	GR00-1 PV4	1			Champagne, (M5V4, M7V4)
	GR00-1 MF7	1			Brownstone, (M7FF), EUROPE
					w/AL - Trim Code
	GR04-5 LD5	1			Quartz, (ALD5)
	GR04-5 LF8	1			Driftwood, (ALFF)
	GR04-5 MV4	1			Champagne, (ALV4)
					w/BL - Trim Code
	HG84-5 MW8	1			Quartz, (BLDW)
	HG84-5 MF8	1			Driftwood, (BLFF)
	HG84-5 MV4	1			Champagne, (BLV4)
					w/TL - Trim Code

MODEL CODES:

72=2 DR Wagon
74=4 DR Wagon
77=Open Body 93" Whlbase
78=Open Body 103" Whlbase - Export
T=2WD
J,N=4WD
U=4WD (RHD)

BODY STYLES:

YJ=Wrangler (4X4) "S"
Weangler (4X4) SE
Wrangler (4X4) Sahara
Wrangler (4X4) Renegade
XJ=Cherokee SE
Cherokee Sport
Cherokee Country
ZJ=Grand Cherokee SE
Grand Cherokee Laredo
Grand Cherolee Limited
ZG=Grand Cherokee European
Y1=Wrangler
X1=Cherokee
Z1=Grand Cherokee
KDX=Vehicles

AR = Use as Required - = Non Illustrated Part P.A.R. = Paint as Required

SEAT COVERS AND SEAT ASSEMBLIES - FRONT SEAT -1994-95 GRAND CHEROKEE AND GRAND WAGONEER - ZJ
Figure IZJ-510

IZJ-510

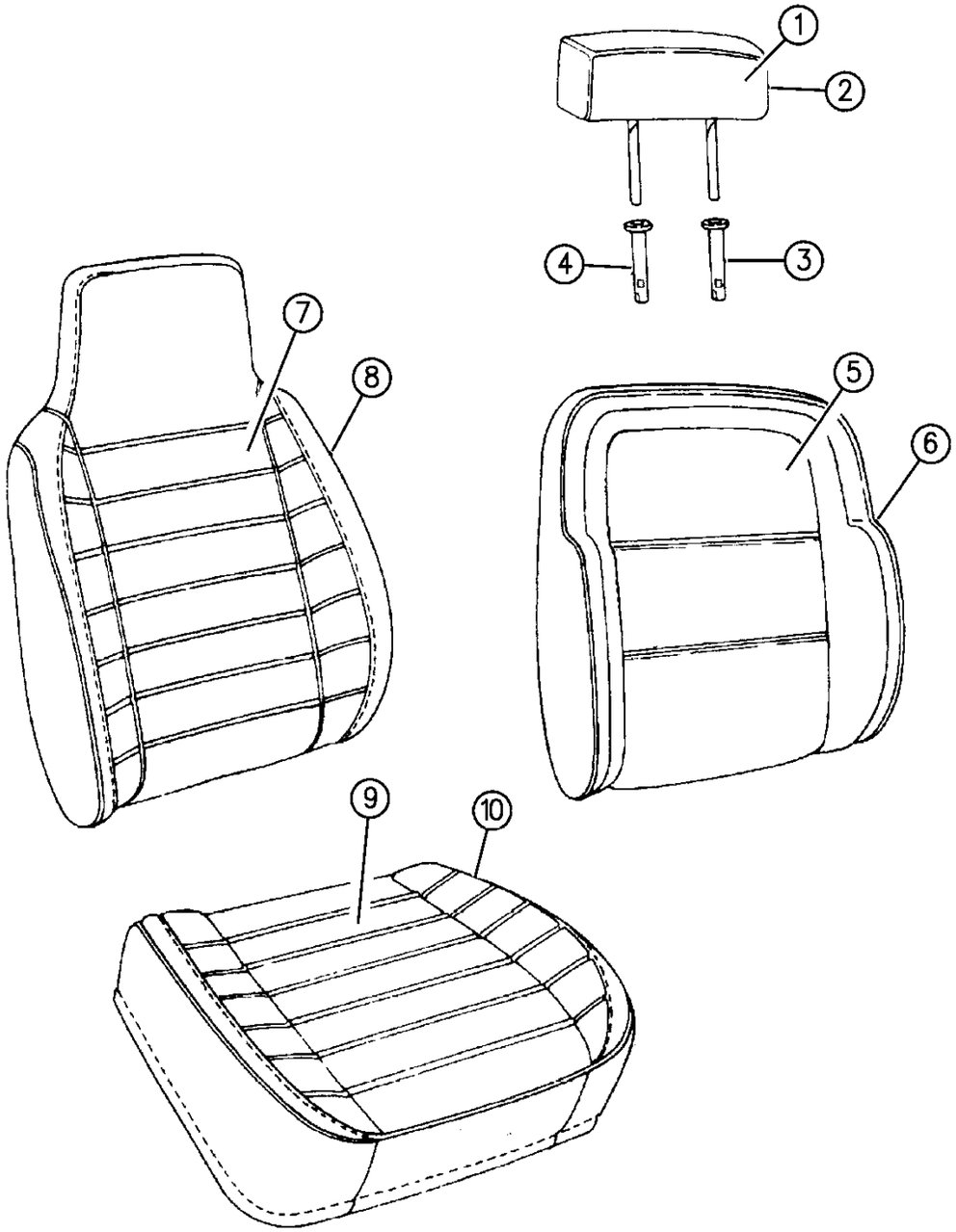

ITEM	PART NUMBER	QTY	BODY	MODEL	DESCRIPTION
	KP28-9 PD5	1			Quartz, (TLD5)
	KP28-9 PF8	1			Driftwood, (TLFF)
					w/DL - Trim Code
	MC18-9 RJ4	1			Gold, 1995, (DLVJ)
10					CUSHION, w/Spring/Frame Pad and Cover
					w/J5 - Trim Code
	GP84-5 LD5	1			Quartz, (J5D5)
	GP84-5 LF7	1			Brownstone, (J5FF)
					w/M5 - Trim Code
	GP88-9 LD5	1			Quartz, (M5D5 and M7D5)
	GP88-9 LF3	1			Brownstone, (M5FF)
	GP88-9 PV4	1			Champagne, (M5V4, M7V4)
	GP88-9 MF7	1			Brownstone, (M7FF), EUROPE
					w/AL - Trim Code
	GP94-5 LD5	1			Quartz, (ALD5)
	GP94-5 LF8	1			Driftwood, (ALFF)
	GP94-5 MV4	1			Champagne, (ALV4)
					w/BL - Trim Code
	HG94-5 MW8	1			Quartz, (BLDW)
	HG94-5 MF8	1			Driftwood, (BLFF)
	HG94-5 MV4	1			Champagne, (BLV4)
					w/TL - Trim Code
	KP26-7 PD5	1			Quartz, (TLD5)
	KP26-7 PF8	1			Driftwood, (TLFF)
					w/DL - Trim Code
	MC16-7 RJ4	1			Gold, 1995, (DLVJ)
NOTE: The following materials (roll goods) are available, order by the inch. Example; to receive 20 linier inches of material - order quantity of 20. e Adhesive #312.					
-					BODYCLOTH, Classic Chianti, 59" Wide ***
-	R027 HD5	AR			Quartz, (J5D5 or ALD5)
-	R027 LF7	AR			Brownstone, (J5FF or ALD5)
-	R027 HV4	AR			Champagne, (ALV4)
-					BODYCLOTH, Barton, 54" Wide ***
-	R094 LD5	AR			Quartz, (M5D5)
-	R094 KF7	AR			Brownstone, (M5FF)
-	R094 PV4	AR			Champagne, (M5V4)
-					BODYCLOTH, Bishop, 54" Wide ***
-	R098 LD5	AR			Quartz, (M5D5)
-	R098 LF7	AR			Brownstone, (M5FF)
-	R098 LV4	AR			Champagne, (M5V4)
NOTE: (S/C-ABE) = Export Equipment Package (optional for Europe market) e Adhesive #312.					

MODEL CODES:

72=2 DR Wagon
74=4 DR Wagon
77=Open Body 93" Whlbase
78=Open Body 103" Whlbase - Export
T=2WD
J,N=4WD
U=4WD (RHD)

BODY STYLES:

YJ=Wrangler (4X4) "S"
Weangler (4X4) SE
Wrangler (4X4) Sahara
Wrangler (4X4) Renegade
XJ=Cherokee SE
Cherokee Sport
Cherokee Country
ZJ=Grand Cherokee SE
Grand Cherokee Laredo
Grand Cherolee Limited
ZG=Grand Cherokee European
Y1=Wrangler
X1=Cherokee
Z1=Grand Cherokee
KDX=Vehicles

AR = Use as Required - = Non Illustrated Part P.A.R. = Paint as Required

SEAT COVERS AND SEAT ASSEMBLIES FRONT SEAT GRAND CHEROKEE - 1996 ZJ
Figure IZJ-520

IZJ–520

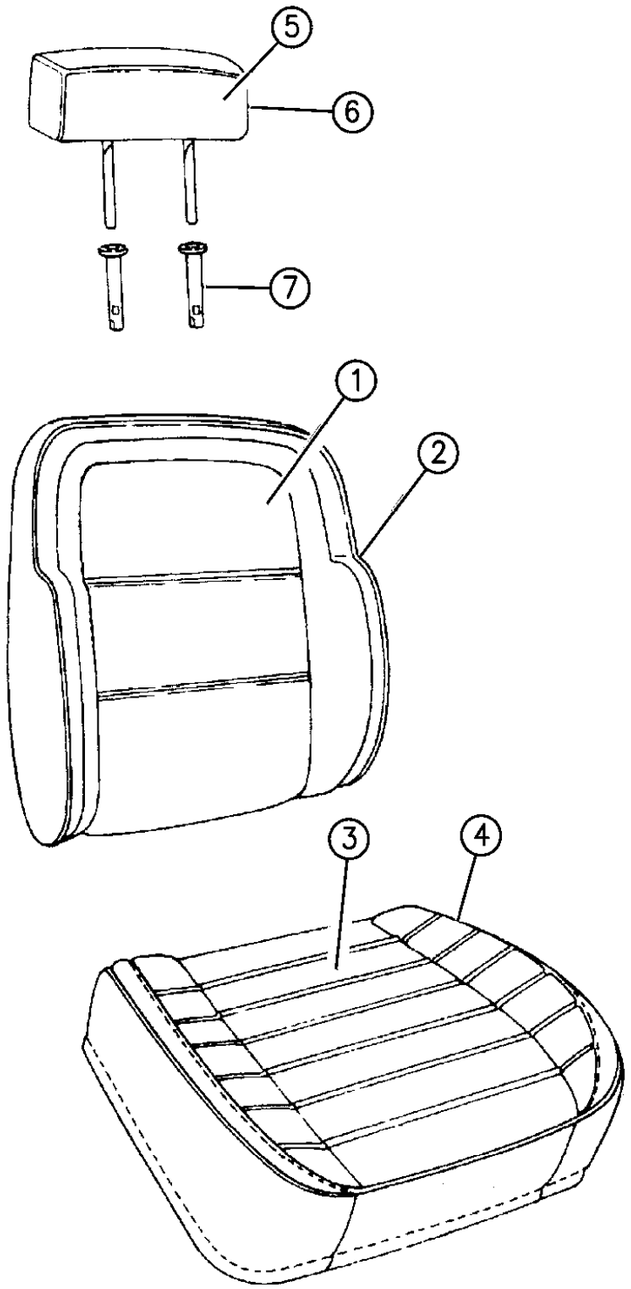

94J29 520

ITEM	PART NUMBER	QTY	BODY	MODEL	DESCRIPTION
Sales Code JPM Are Heated Seats. e Adhesive #312.					
1					COVER, Seat Back
					w/CL - Trim Code
					Heated
	PM38 SAZ	2			Agate
	PM38 SC3	2			Mist Gray
	PM38 ST6	2			Saddle
					Non-Heated
	PM48 SAZ	2			Agate
	PM48 SC3	2			Mist Gray
	PM48 ST6	2			Saddle
					w/EL - Trim Code, Leather
	PM49 SAZ	2			Agate
	PM49 ST6	2			Saddle
					w/F5 - Trim Code, Cloth
					Manual
	PM45 SAZ	2			Agate
	PM45 SC3	2			Mist Gray
	PM45 ST6	2			Saddle
					Power
	PM47 SAZ	2			Agate
	PM47 SC3	2			Mist Gray
	PM47 ST6	2			Saddle
					w/GL - Trim Code
	PM44 SJ4	2			Gold
-	5015 478AA	1			REPAIR KIT, Heated Seats ***
2					BACK ASSEMBLY
					w/CL - Trim Code
					Heated
	PN00-1 SAZ	1			Agate
	PN00-1 SC3	1			Mist Gray
	PN00-1 ST6	1			Saddle
					Non-Heated
	PM94-5 SAZ	1			Agate
	PM94-5 SC3	1			Mist Gray
	PM94-5 ST6	1			Saddle
					w/EL - Trim Code, Leather
	PM96-7 SAZ	1			Agate
	PM96-7 ST6	1			Saddle
					w/F5 - Trim Code, Cloth
					Manual
	PM92-3 SAZ	1			Agate

MODEL CODES:

72=2 DR Wagon
74=4 DR Wagon
77=Open Body 93" Whlbase
78=Open Body 103" Whlbase - Export
T=2WD
J,N=4WD
U=4WD (RHD)

BODY STYLES:

YJ=Wrangler (4X4) "S"
Weangler (4X4) SE
Wrangler (4X4) Sahara
Wrangler (4X4) Renegade
XJ=Cherokee SE
Cherokee Sport
Cherokee Country
ZJ=Grand Cherokee SE
Grand Cherokee Laredo
Grand Cherolee Limited
ZG=Grand Cherokee European
Y1=Wrangler
X1=Cherokee
Z1=Grand Cherokee
KDX=Vehicles

AR = Use as Required - = Non Illustrated Part P.A.R. = Paint as Required

SEAT COVERS AND SEAT ASSEMBLIES FRONT SEAT GRAND CHEROKEE - 1996 ZJ
Figure IZJ-520

IZJ–520

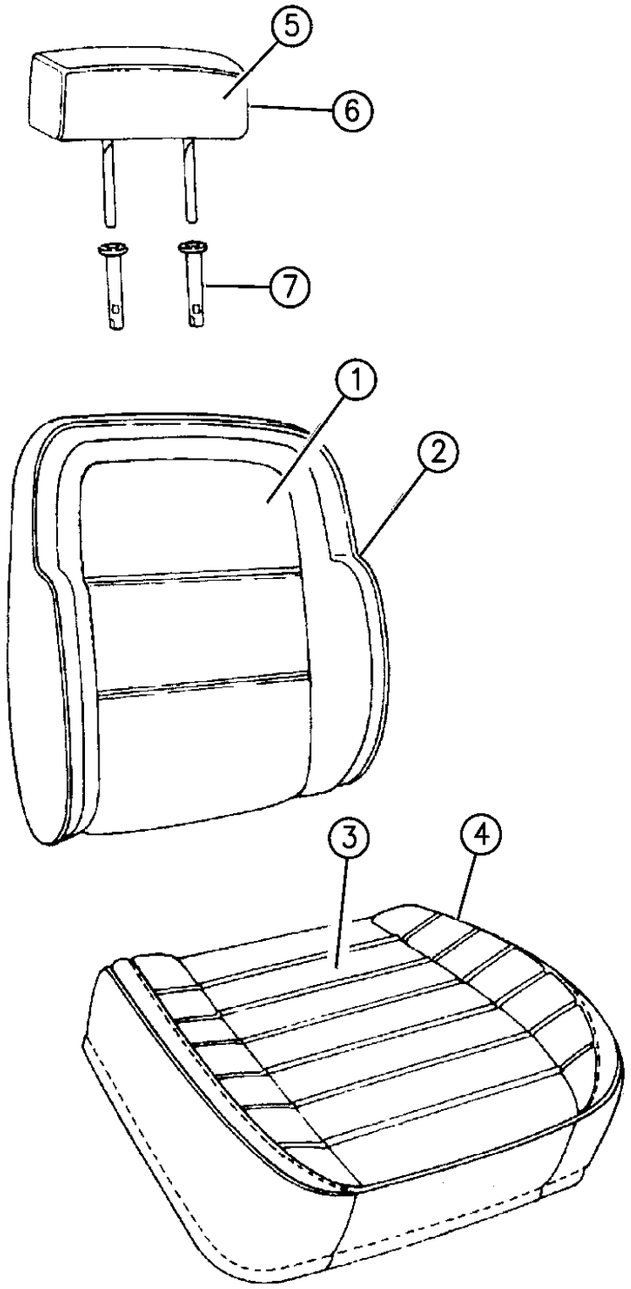

94J29 520

ITEM	PART NUMBER	QTY	BODY	MODEL	DESCRIPTION
	PM92-3 SC3	1			Mist Gray
	PM92-3 ST6	1			Saddle
					Power
	PM98-9 SAZ	1			Agate
	PM98-9 SC3	1			Mist Gray
	PM98-9 ST6	1			Saddle
					w/GL - Trim Code
	PN02-3 SJ4	1			Gold
3					COVER & PAD ASSEMBLY ***
					w/CL - Trim Code
					Heated
	PN08-9 SAZ	1			Agate
	PN08-9 SC3	1			Mist Gray
	PN08 ST6	1			Saddle, Right
	PN09 ST6	1			Saddle, Left
					Non-Heated
	PN04-5 SAZ	1			Agate
	PN04-5 SC3	1			Mist Gray
	PN04 ST6	1			Saddle, Right
	PN05 ST6	1			Saddle, Left
					w/EL - Trim Code, Leather
	PN12-3 SAZ	1			Agate
	PN12 ST6	1			Saddle, Right
	PN13 ST6	1			Saddle, Left
					w/F5 Trim Code, Cloth
					Manual
	PN06-7 SAZ	1			Agate
	PN06-7 SC3	1			Mist Gray
	PN06 ST6	1			Saddle, Right
	PN07 ST6	1			Saddle, Left
					Power
	PR00-1 SAZ	1			Agate
	PR00-1 SC3	1			Mist Gray
	PR00 ST6	1			Saddle, Right
	PR01 ST6	1			Saddle, Left
					w/GL Trim Code
	PN10-1 SJ4	1			Gold
4	4856 470-1	1			FRAME ASSY., Front Cushion ***
5					COVER, Headrest
					w/CL Trim Code
					Domestic
	PM50 SAZ	2			Agate

MODEL CODES:

72=2 DR Wagon
74=4 DR Wagon
77=Open Body 93" Whlbase
78=Open Body 103" Whlbase - Export
T=2WD
J,N=4WD
U=4WD (RHD)

BODY STYLES:

YJ=Wrangler (4X4) "S"
Weangler (4X4) SE
Wrangler (4X4) Sahara
Wrangler (4X4) Renegade
XJ=Cherokee SE
Cherokee Sport
Cherokee Country
ZJ=Grand Cherokee SE
Grand Cherokee Laredo
Grand Cherolee Limited
ZG=Grand Cherokee European
Y1=Wrangler
X1=Cherokee
Z1=Grand Cherokee
KDX=Vehicles

AR = Use as Required - = Non Illustrated Part P.A.R. = Paint as Required

SEAT COVERS AND SEAT ASSEMBLIES FRONT SEAT GRAND CHEROKEE - 1996 ZJ
Figure IZJ-520

IZJ–520

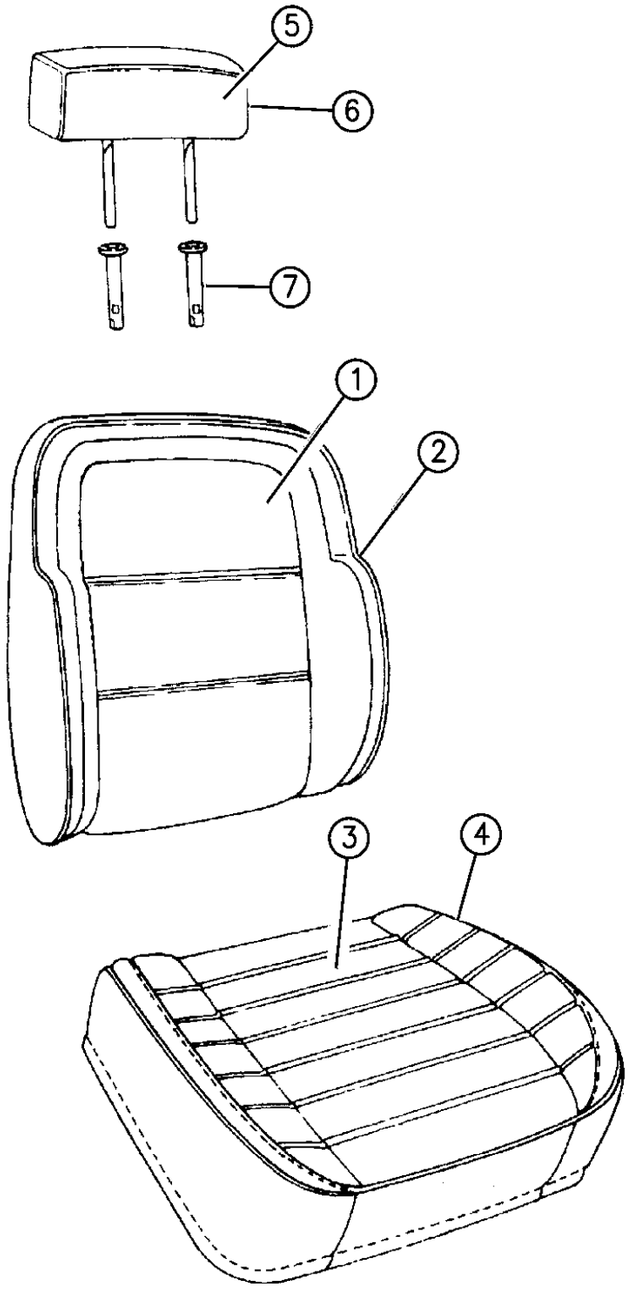

94J29 520

ITEM	PART NUMBER	QTY	BODY	MODEL	DESCRIPTION
	PM50 SC3	2			Mist Gray
	PM50 ST6	2			Saddle
					w/GL Trim Code
	PM50 SJ4	2			Gold
					w/CL Trim Code
					EXPORT, (ECE)
	PM51 SAZ	2			Agate
	PM51 ST6	2			Saddle
6					HEADREST ASSY. ***
					w/CL Trim Code
					Domestic
	PM90 SAZ	2			Agate
	PM90 SC3	2			Mist Gray
	PM90 ST6	2			Saddle
					w/GL Trim Code
	PM90 SJ4	2			Gold
					w/CL Trim Code
					EXPORT, (ECE)
	PN16 SAZ	2			Agate
	PN16 ST6	2			Saddle
The following headrests are 'Pour-in-Place', therefore no covers will be serviced. e Adhesive #312.					
					w/EL Trim Code
	PN14 SAZ	2			Agate
	PN14 ST6	2			Saddle
					w/F5 Trim Code
					Domestic
	PN15 SAZ	2			Agate
	PN15 SC3	2			Mist Gray
	PN15 ST6	2			Saddle
					EXPORT, (ECE)
	PN17 SAZ	2			Agate
	PN17 SC3	2			Mist Blue
	PN17 ST6	2			Saddle
7	4723 834	AR			CYLINDER, Headrest w/Latch

MODEL CODES:

72=2 DR Wagon
74=4 DR Wagon
77=Open Body 93" Whlbase
78=Open Body 103" Whlbase - Export
T=2WD
J,N=4WD
U=4WD (RHD)

BODY STYLES:

YJ=Wrangler (4X4) "S"
Weangler (4X4) SE
Wrangler (4X4) Sahara
Wrangler (4X4) Renegade
XJ=Cherokee SE
Cherokee Sport
Cherokee Country
ZJ=Grand Cherokee SE
Grand Cherokee Laredo
Grand Cherolee Limited
ZG=Grand Cherokee European
Y1=Wrangler
X1=Cherokee
Z1=Grand Cherokee
KDX=Vehicles

AR = Use as Required - = Non Illustrated Part P.A.R. = Paint as Required

SEATS REAR SEAT, WITHOUT CHILD SEAT, 1994-95 GRAND CHEROKEE AND GRAND WAGONEER - ZJ
Figure IZJ-610

IZJ-610B

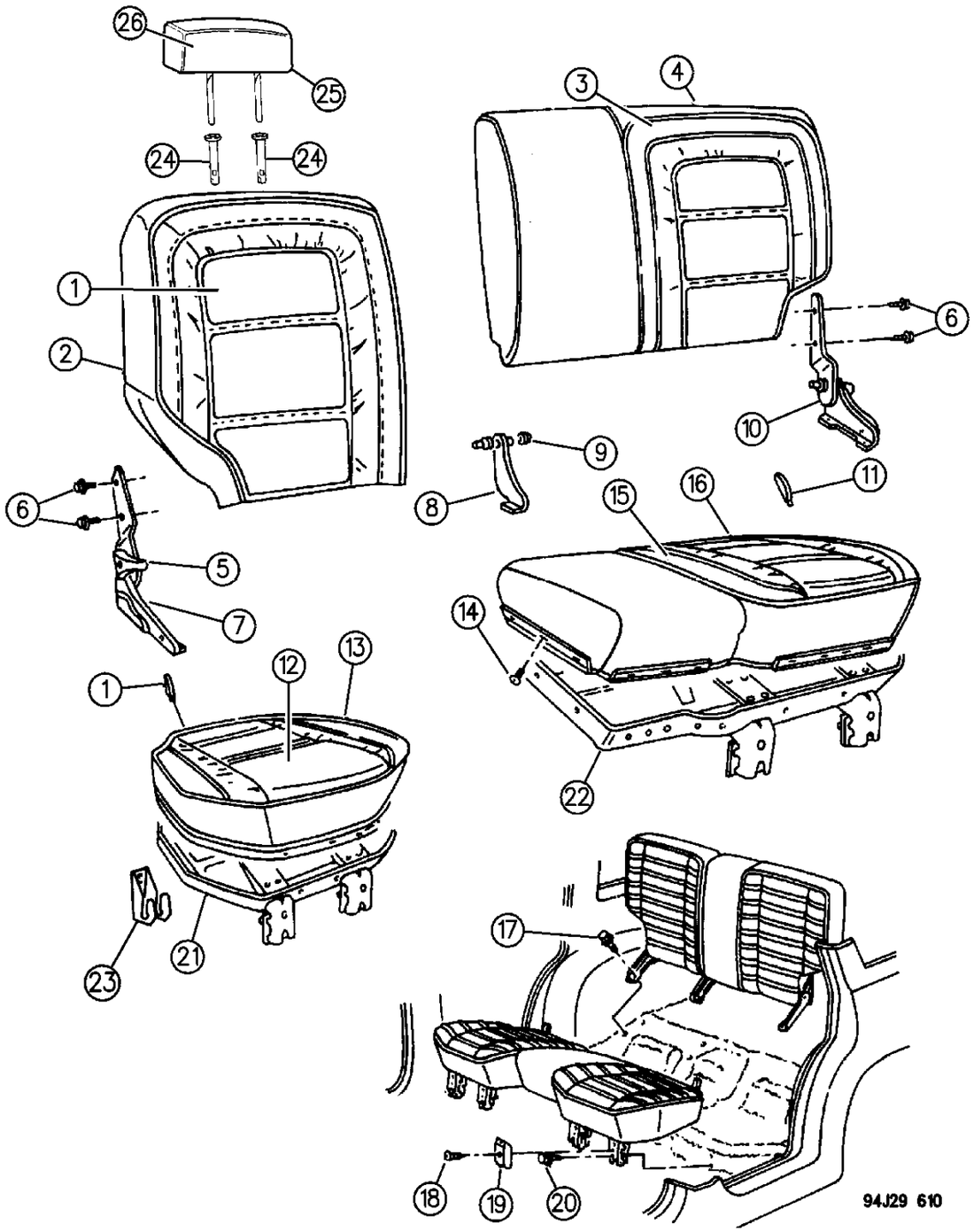

ITEM	PART NUMBER	QTY	BODY	MODEL	DESCRIPTION
1					COVER, Seat Back (40%)
					w/J5 - Trim Code
	JY16 PD5	1			Quartz, (J5D5)
	JY16 PF7	1			Brownstone, (J5FF)
					w/M5 - Trim Code
	KJ70 PD5	1			Quartz, (M5D5)
	KJ70 PF3	1			Brownstone, (M5FF)
	KJ70 PV4	1			Champagne, (M5V4)
					w/AL - Trim Code
	KK00 PD5	1			Quartz, (ALD5)
	KK00 PF8	1			Driftwood, (ALFF)
	KK00 PV4	1			Champagne, (ALV4)
					w/BL - Trim Code
	KK10 PW8	1			Quartz, (BLDW)
	KK10 PF8	1			Driftwood, (BLFF)
	KK10 PV4	1			Champagne, (BLV4)
					w/TL - Trim Code
	KP32 PD5	1			Quartz, (TLD5)
	KP32 PF8	1			Driftwood, (TLFF)
					w/M7 - Trim Code, EXPORT
	KJ70 PD5	1			Quartz, (M7D5)
	KJ70 PF7	1			Brownstone, (M7FF)
	KJ70 PV4	1			Champagne, (M7V4)
					w/DL Trim Code
	MB88 RJ4	1			Gold, 1995, (DLVJ)
2					BACK, w/Spring/Frame Pad and Cover (40%)
					w/J5 - Trim Code
	KJ52 PD5	1			Quartz, (J5D5)
	KJ52 PF7	1			Brownstone, (J5FF)
					w/M5 - Trim Code
	KJ68 PD5	1			Quartz, (M5D5)
	KJ68 PF3	1			Brownstone, (M5FF)
	KJ68 PV4	1			Champagne, (M5V4)
					w/AL - Trim Code
	KJ98 PD5	1			Quartz, (ALD5)
	KJ98 PF8	1			Driftwood, (ALFF)
	KJ98 PV4	1			Champagne, (ALV4)
					w/BL - Trim Code
	KK08 PW8	1			Quartz, (BLDW)
	KK08 PF8	1			Driftwood, (BLFF)
	KK08 PV4	1			Champagne, (BLV4)
					w/TL Trim Code

MODEL CODES:

72=2 DR Wagon
74=4 DR Wagon
77=Open Body 93" Whlbase
78=Open Body 103" Whlbase - Export
T=2WD
J,N=4WD
U=4WD (RHD)

BODY STYLES:

YJ=Wrangler (4X4) "S"
Weangler (4X4) SE
Wrangler (4X4) Sahara
Wrangler (4X4) Renegade
XJ=Cherokee SE
Cherokee Sport
Cherokee Country
ZJ=Grand Cherokee SE
Grand Cherokee Laredo
Grand Cherolee Limited
ZG=Grand Cherokee European
Y1=Wrangler
X1=Cherokee
Z1=Grand Cherokee
KDX=Vehicles

AR = Use as Required - = Non Illustrated Part P.A.R. = Paint as Required

SEATS REAR SEAT, WITHOUT CHILD SEAT, 1994-95 GRAND CHEROKEE AND GRAND WAGONEER - ZJ
Figure IZJ-610

IZJ-610B

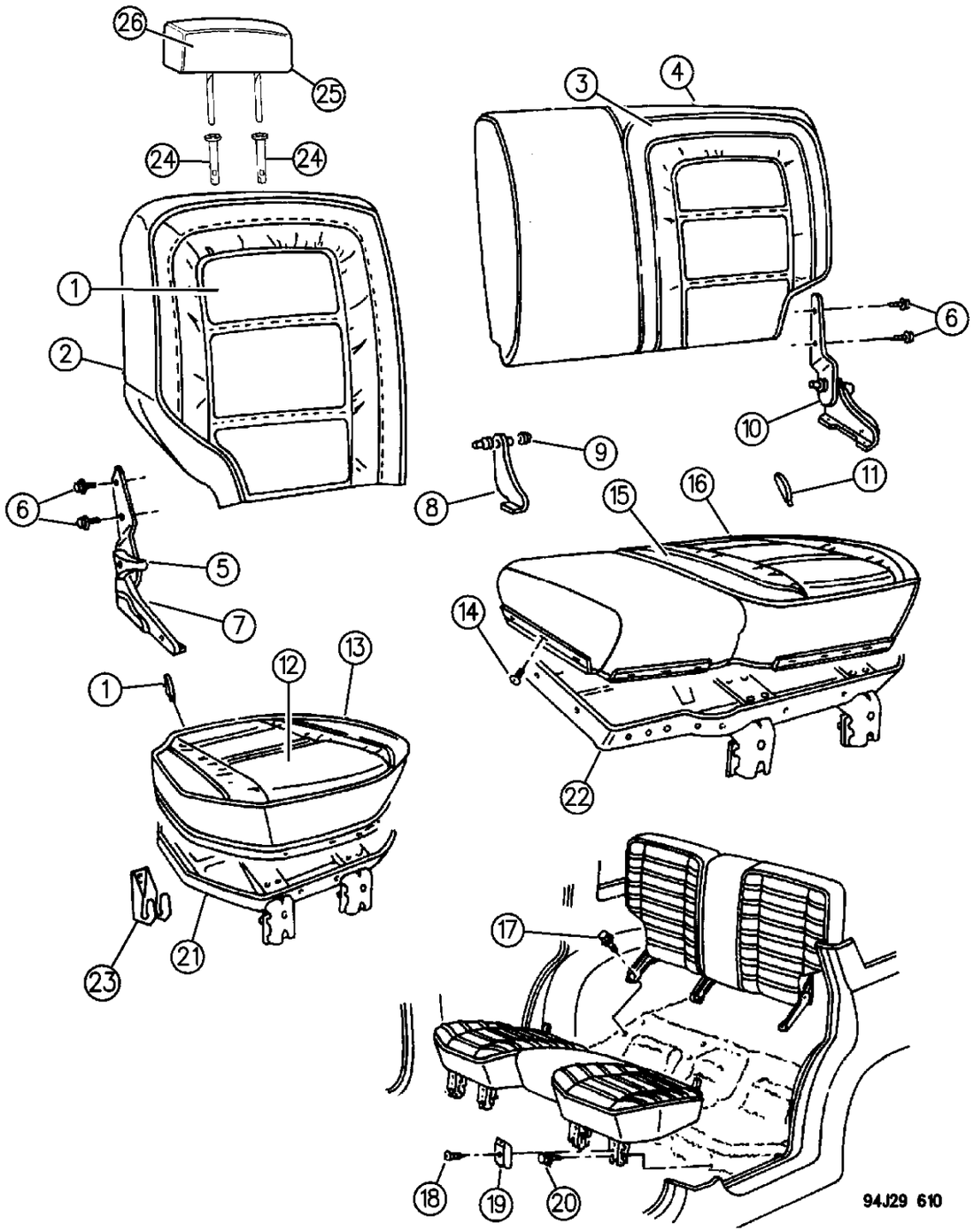

ITEM	PART NUMBER	QTY	BODY	MODEL	DESCRIPTION
	KP30 PD5	1			Quartz, (TLD5)
	KP30 PF8	1			Driftwood, (TLFF)
					w/M7 - Trim Code, EXPORT
	KJ68 PD5	1			Quartz, (M7D5)
	KJ68 PF7	1			Brownstone, (M7FF)
	KJ68 PV4	1			Champagne, (M7V4)
					w/DL Trim Code
	MB84 RJ4	1			Gold, 1995, (DLVJ)
3					COVER, Seat Back (60%)
					w/J5 - Trim Code
	JY17 PD5	1			Quartz, (J5D5)
	JY17 PF7	1			Brownstone, (J5FF)
					w/M5 - Trim Code
	KJ71 PD5	1			Quartz, (M5D5)
	KJ71 PF3	1			Brownstone, (M5FF)
	KJ71 PV4	1			Champagne, (M5V4)
					w/AL - Trim Code
	KK01 PD5	1			Quartz, (ALD5)
	KK01 PF8	1			Driftwood, (ALFF)
	KK01 PV4	1			Champagne, (ALV4)
					w/BL - Trim Code
	KK11 PW8	1			Quartz, (BLDW)
	KK11 PF8	1			Driftwood, (BLFF)
	KK11 PV4	1			Champagne, (BLV4)
					w/TL Trim Code
	KP33 PD5	1			Quartz, (TLD5)
	KP33 PF8	1			Driftwood, (TLFF)
					w/M7 - Trim Code, EXPORT
	KJ71 PD5	1			Quartz, (M7D5)
	KJ71 PF7	1			Brownstone, (M7FF)
	KJ71 PV4	1			Champagne, (M7V4)
					w/DL Trim Code
	MB89 RJ4	1			Gold, 1995, (DLVJ)
4					BACK, w/Spring/Frame Pad and Cover (60%)
					w/J5 - Trim Code
	KJ53 PD5	1			Quartz, (J5D5)
	KJ53 PF7	1			Brownstone, (J5FF)
					w/M5 - Trim Code
	KJ69 PD5	1			Quartz, (M5D5)
	KJ69 PF3	1			Brownstone, (M5FF)
	KJ69 PV4	1			Champagne, (M5V4)
					w/AL - Trim Code

MODEL CODES:

72=2 DR Wagon
74=4 DR Wagon
77=Open Body 93" Whlbase
78=Open Body 103" Whlbase - Export
T=2WD
J,N=4WD
U=4WD (RHD)

BODY STYLES:

YJ=Wrangler (4X4) "S"
Weangler (4X4) SE
Wrangler (4X4) Sahara
Wrangler (4X4) Renegade
XJ=Cherokee SE
Cherokee Sport
Cherokee Country
ZJ=Grand Cherokee SE
Grand Cherokee Laredo
Grand Cherolee Limited
ZG=Grand Cherokee European
Y1=Wrangler
X1=Cherokee
Z1=Grand Cherokee
KDX=Vehicles

AR = Use as Required - = Non Illustrated Part P.A.R. = Paint as Required

SEATS REAR SEAT, WITHOUT CHILD SEAT, 1994-95 GRAND CHEROKEE AND GRAND WAGONEER - ZJ
Figure IZJ-610

IZJ-610B

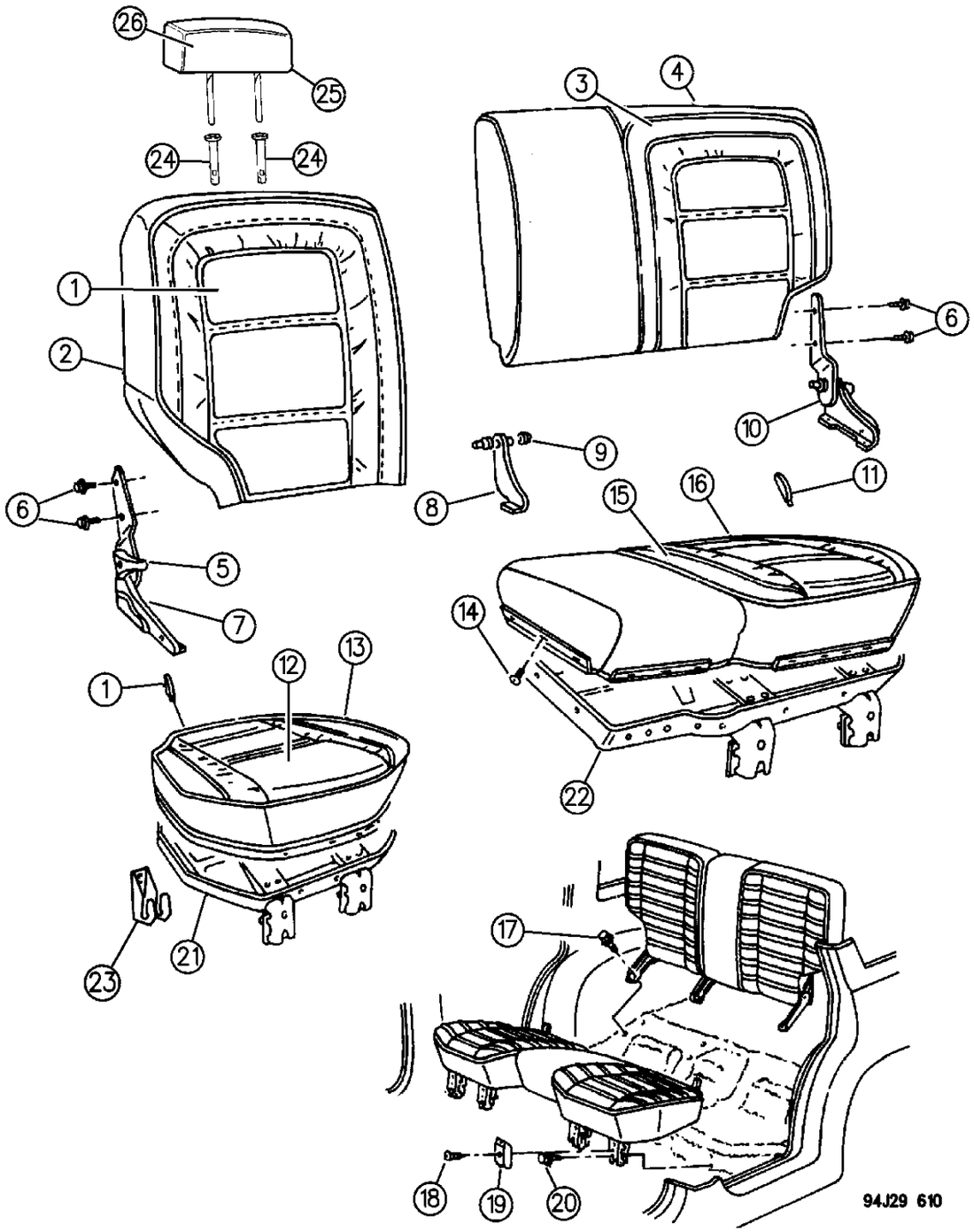

ITEM	PART NUMBER	QTY	BODY	MODEL	DESCRIPTION
	KJ99 PD5	1			Quartz, (ALD5)
	KJ99 PF8	1			Driftwood, (ALFF)
	KJ99 PV4	1			Champagne, (ALV4)
					w/BL - Trim Code
	KK09 PW8	1			Quartz, (BLDW)
	KK09 PF8	1			Driftwood, (BLFF)
	KK09 PV4	1			Champagne, (BLV4)
					w/TL Trim Code
	KP31 PD5	1			Quartz, (TLD5)
	KP31 PF8	1			Driftwood, (TLFF)
					w/M7 - Trim Code, EXPORT
	KJ69 PD5	1			Quartz, (M7D5)
	KJ69 PF7	1			Brownstone, (M7FF)
	KJ69 PV4	1			Champagne, (M7V4)
					w/DL Trim Code
	MB85 RJ4	1			Gold, 1995, (DLVJ)
5	4720 813	2			HANDLE, Latch Actuating (This Handle Is Also Included As Part Of Item 7 & 10 Latch Assembly)
* When Stock Runs Out On 4720813 You Must Change Both Handles With 4773930-1, At The Same Time e Adhesive #312.					
	4773 930-1	1			HANDLE, Latch Actuating
-	4713 800	2			SCREW, (For Attaching Handle To Latch)
6	4713 968	4			BOLT, Latch to Seat Back
7	4773 140	1			LATCH ASSEMBLY, Right, Includes Latch, Handle, And Cover ***
-	4720 586-7	1			COVER, Latch, Black (Also Included In Latchassemb ly)
-	4728 280	2			RIVNUT ASSEMBLY, (For Attaching Cover To Latch) ***
8	4761 926	1			BRACKET, Center Pivot
9	4720 795	1			GROMMET, Center Pivot
10	4773 141	1			LATCH ASSEMBLY, (Includes Latch Handle And Cover) ***
NOTE: See Item #7 For Available Components Of The Latch Assembly. e Adhesive #312.					
11					STRAP, Pull (rear seat cushion)
	HC66 MW8	2			Quartz, (w/trim code BLDW)
	HC66 LD5	2			Quartz
	HC66 LF8	2			Driftwood
	HC66 MV4	2			Champagne
12					COVER, Cushion (40%)
					w/J5 - Trim Code
	KJ56 PD5	1			Quartz, (J5D5)
	KJ56 PF7	1			Brownstone, (J5FF)
					w/M5 - Trim Code, w/Vinyl Rear Facing
	KJ76 PD5	1			Quartz, (M5D5)
	KJ76 PF3	1			Brownstone, (M5FF)
	KJ76 PV4	1			Champagne, (M5V4)

MODEL CODES:

72=2 DR Wagon
74=4 DR Wagon
77=Open Body 93" Whlbase
78=Open Body 103" Whlbase - Export
T=2WD
J,N=4WD
U=4WD (RHD)

BODY STYLES:

YJ=Wrangler (4X4) "S"
Weangler (4X4) SE
Wrangler (4X4) Sahara
Wrangler (4X4) Renegade
XJ=Cherokee SE
Cherokee Sport
Cherokee Country
ZJ=Grand Cherokee SE
Grand Cherokee Laredo
Grand Cherolee Limited
ZG=Grand Cherokee European
Y1=Wrangler
X1=Cherokee
Z1=Grand Cherokee
KDX=Vehicles

AR = Use as Required - = Non Illustrated Part P.A.R. = Paint as Required

SEATS REAR SEAT, WITHOUT CHILD SEAT, 1994-95 GRAND CHEROKEE AND GRAND WAGONEER - ZJ
Figure IZJ-610

IZJ-610B

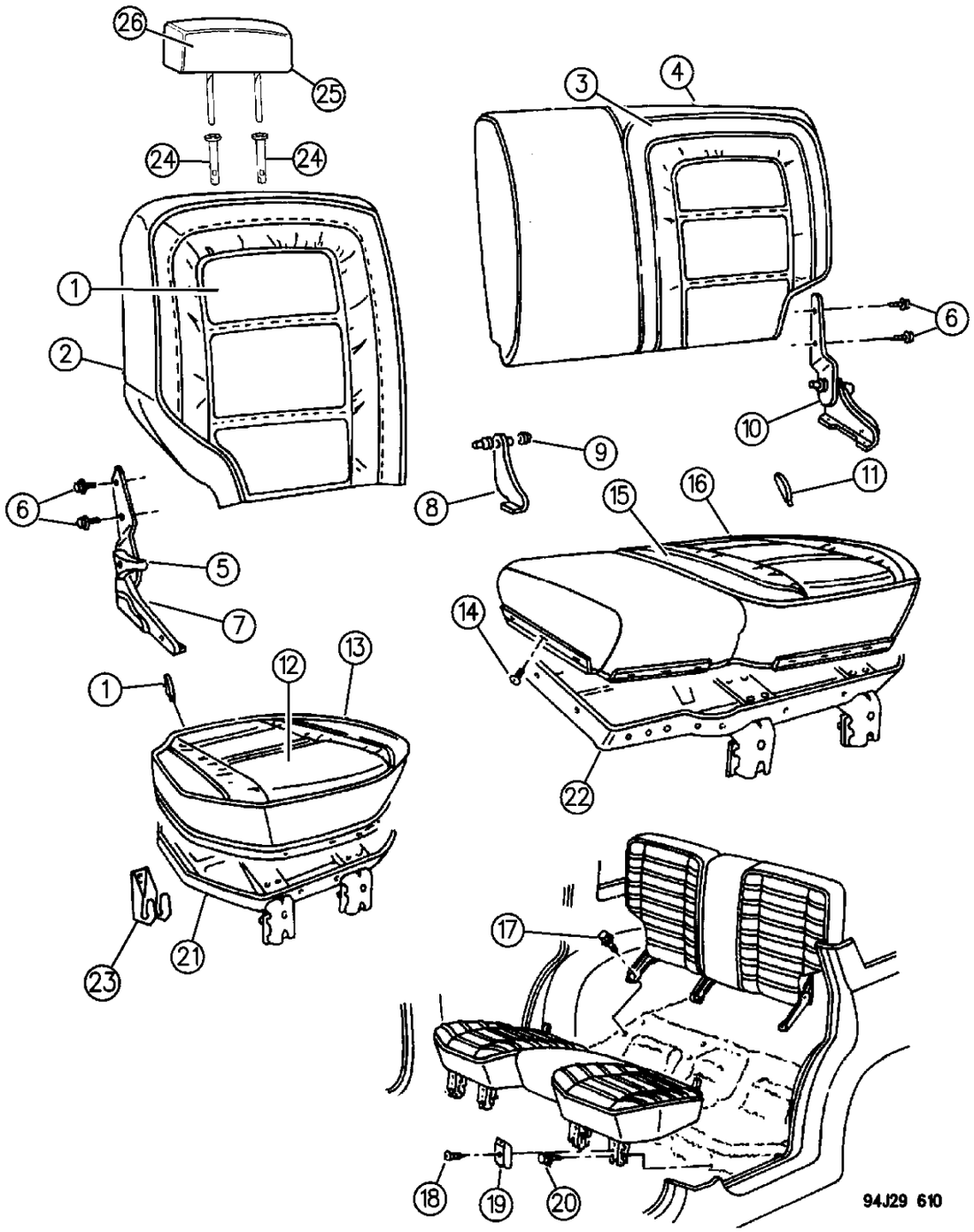

ITEM	PART NUMBER	QTY	BODY	MODEL	DESCRIPTION
					w/M5 - Trim Code, w/Cloth Rear Facing
	MB42 PD5	1			Quartz, (M5D5)
	MB42 PF3	1			Brownstone, (M5FF)
	MB42 PV4	1			Champagne, (M5V4)
					w/AL - Trim Code
	KK04 PD5	1			Quartz, (ALD5)
	KK04 PF8	1			Driftwood, (ALFF)
	KK04 PV4	1			Champagne, (ALV4)
					w/BL - Trim Code
	KK14 PW8	1			Quartz, (BLDW)
	KK14 PF8	1			Driftwood, (BLFF)
	KK14 PV4	1			Champagne, (BLV4)
					w/TL Trim Code
	KP36 PD5	1			Quartz, (TLD5)
	KP36 PF8	1			Driftwood, (TLFF)
					w/M7 Trim Code, w/Vinyl Rear Facing, EXPORT
	KJ76 PD5	1			Quartz, (M7D5)
	KJ76 PF7	1			Brownstone, (M7FF)
	KJ76 PV4	1			Champagne, (M7V4)
					w/M7 - Trim Code, w/Cloth Rear Facing, EXPORT
	MB42 PD5	1			Quartz, (M7D5)
	MB42 PF7	1			Brownstone, (M7FF)
	MB42 PV4	1			Champagne, (M7V4)
					w/DL Trim Code
	MC14 RJ4	1			Gold, 1995, (DLVJ)
13					CUSHION, w/Spring/Frame Pad and Cover (40%)
					w/J5 - Trim Code
					(Use Up To 7-9-93)
	KJ54 PD5	1			Quartz, (J5D5)
	KJ54 PF7	1			Brownstone, (J5FF)
					(Use After 7-9-93)
	LB08 PD5	1			Quartz, (J5D5)
	LB08 PF7	1			Brownstone, (J5FF)
					1995
	MB32 RDD	1			Quartz, (J5D5)
	MB32 RF7	1			Brownstone, (J5FF)
					w/M5 - Trim Code, w/Vinyl Facing
					Up To 7-9-93
	KJ72 PD5	1			Quartz, (M5D5)
	KJ72 PF3	1			Brownstone, (M5FF)
	KJ72 PV4	1			Champagne, (M5V4)
					(Use After 7-9-93)

MODEL CODES:

72=2 DR Wagon
74=4 DR Wagon
77=Open Body 93" Whlbase
78=Open Body 103" Whlbase - Export
T=2WD
J,N=4WD
U=4WD (RHD)

BODY STYLES:

YJ=Wrangler (4X4) "S"
Weangler (4X4) SE
Wrangler (4X4) Sahara
Wrangler (4X4) Renegade
XJ=Cherokee SE
Cherokee Sport
Cherokee Country
ZJ=Grand Cherokee SE
Grand Cherokee Laredo
Grand Cherolee Limited
ZG=Grand Cherokee European
Y1=Wrangler
X1=Cherokee
Z1=Grand Cherokee
KDX=Vehicles

AR = Use as Required - = Non Illustrated Part P.A.R. = Paint as Required

SEATS REAR SEAT, WITHOUT CHILD SEAT, 1994-95 GRAND CHEROKEE AND GRAND WAGONEER - ZJ
Figure IZJ-610

IZJ-610B

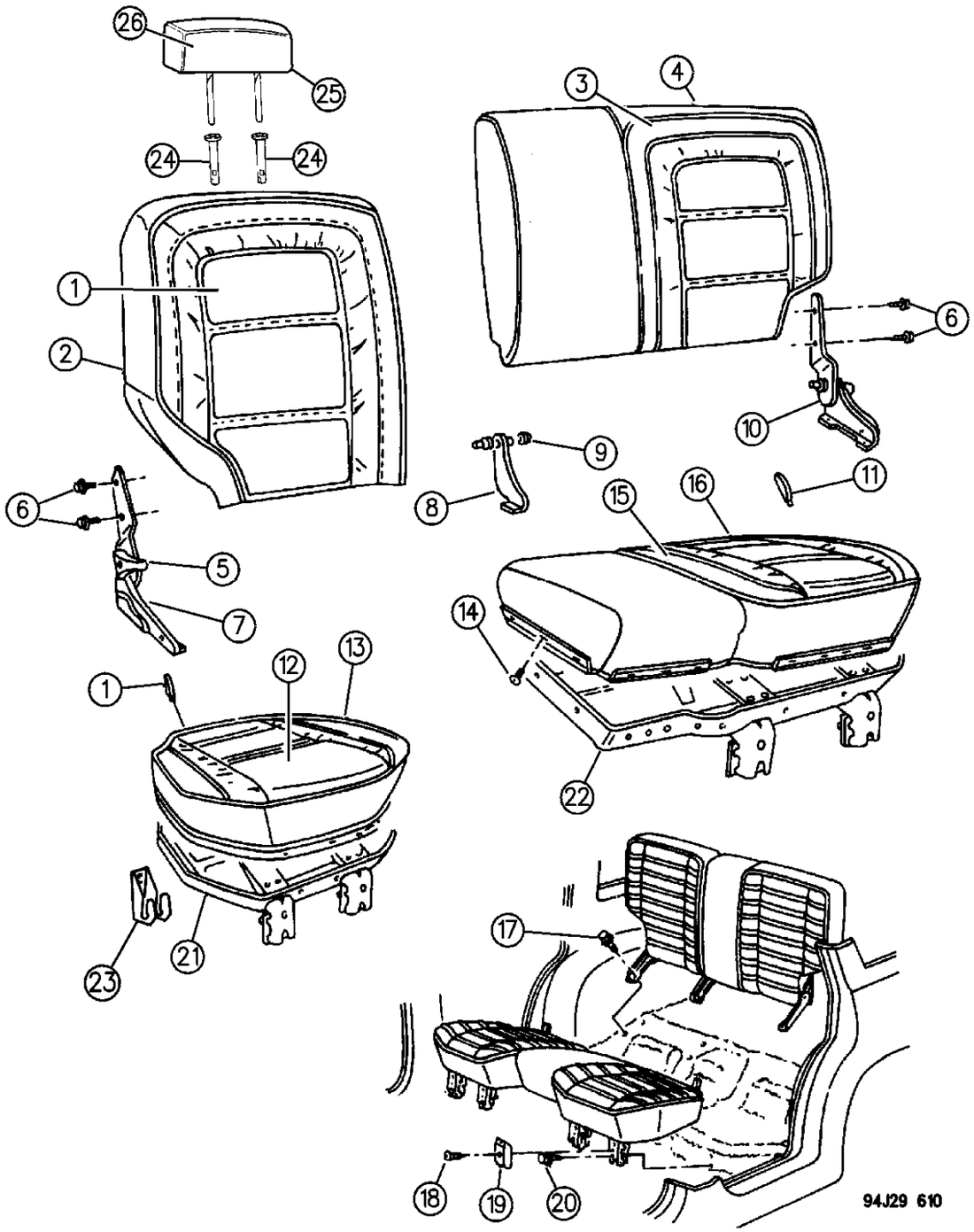

ITEM	PART NUMBER	QTY	BODY	MODEL	DESCRIPTION
	LB10 PD5	1			Quartz, (M5D5)
	LB10 PF3	1			Brownstone, (M5FF)
	LB10 PV4	1			Champagne, (M5V4)
					w/Cloth Facing
	MB40 PD5	1			Quartz, (M5D5)
	MB40 PF3	1			Brownstone, (M5FF)
	MB40 PV4	1			Champagne, (M5V4)
					1995
	MC26 RD5	1			Quartz, (M5D5)
	MC26 RF7	1			Brownstone, (M5FF)
	MC26 RV4	1			Champagne, (M5V4)
					w/AL - Trim Code
					(Use Up To 7-9-93)
	KK02 PD5	1			Quartz, (ALD5)
	KK02 PF8	1			Driftwood, (ALFF)
	KK02 PV4	1			Champagne, (ALV4)
					(Use After 7-9-93)
	LB12 PD5	1			Quartz, (ALD5)
	LB12 PF8	1			Driftwood, (ALFF)
	LB12 PV4	1			Champagne, (ALV4)
					1995
	MC28 RD5	1			Quartz, (ALD5)
	MC28 RF8	1			Driftwood, (ALFF)
	MC28 RV4	1			Champagne, (ALV4)
					w/BL - Trim Code
					(Use Up To 7-9-93)
	KK12 PW8	1			Quartz, (BLDW)
	KK12 PF8	1			Driftwood, (BLFF)
	KK12 PV4	1			Champagne, (BLV4)
					(Use After 7-9-93)
	LB14 PF8	1			Driftwood, (BLFF)
	LB14 PV4	1			Champagne, (BLV4)
	LB14 PW8	1			Quartz, (BLDW)
					1995
	MC30 RW8	1			Quartz, (BLDW)
	MC30 RF6	1			Driftwood, (BLFF)
	MC30 RV4	1			Champagne, (BLV4)
					w/TL Trim Code
					(Use Up To 7-9-93)
	KP34 PD5	1			Quartz, (TLD5)
	KP34 PF8	1			Driftwood, (TLFF)
					(Use After 7-9-93)

MODEL CODES:

72=2 DR Wagon
74=4 DR Wagon
77=Open Body 93" Whlbase
78=Open Body 103" Whlbase - Export
T=2WD
J,N=4WD
U=4WD (RHD)

BODY STYLES:

YJ=Wrangler (4X4) "S"
Weangler (4X4) SE
Wrangler (4X4) Sahara
Wrangler (4X4) Renegade

XJ=Cherokee SE
Cherokee Sport
Cherokee Country

ZJ=Grand Cherokee SE
Grand Cherokee Laredo
Grand Cherolee Limited
ZG=Grand Cherokee European

Y1=Wrangler
X1=Cherokee
Z1=Grand Cherokee
KDX=Vehicles

AR = Use as Required - = Non Illustrated Part P.A.R. = Paint as Required

SEATS REAR SEAT, WITHOUT CHILD SEAT, 1994-95 GRAND CHEROKEE AND GRAND WAGONEER - ZJ
Figure IZJ-610

IZJ-610B

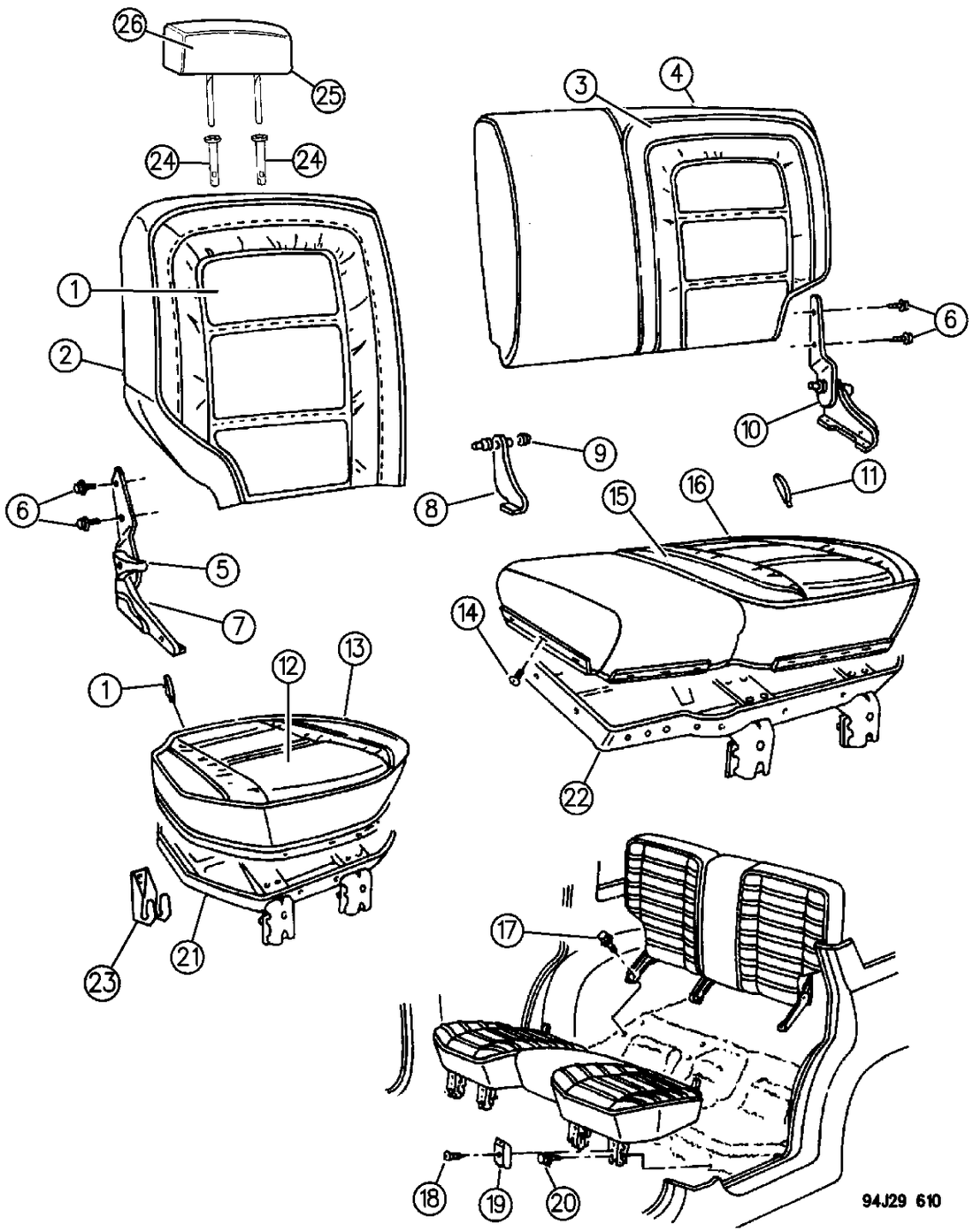

ITEM	PART NUMBER	QTY	BODY	MODEL	DESCRIPTION
	LB16 PD5	1			Quartz, (TLD5)
	LB16 PF8	1			Driftwood, (TLFF)
					1995
	MC32 RD5	1			Quartz, (TLD5)
	MC32 RF8	1			Driftwood, (TLFF)
					w/M7 - Trim Code, w/Vinyl Facing, EXPORT
					Up to 7-9-93
	KJ72 PD5	1			Quartz, (M7D5)
	KJ72 PF7	1			Brownstone, (M7FF)
	KJ72 PV4	1			Champagne, (M7V4)
					After 7-9-93
	LB10 PD5	1			Quartz, (M7D5)
	LB10 PF7	1			Brownstone, (M7FF)
	LB10 PV4	1			Champagne, (M7V4)
					w/Cloth Facing
	MB40 PD5	1			Quartz, (M7D5)
	MB40 PF7	1			Brownstone, (M7FF)
	MB40 PV4	1			Champagne, (M7V4)
					w/DL Trim Code
	MC12 RJ4	1			Gold, 1995, (DLVJ)
14	4720 778	18			RETAINER, Rear Seat Cushion Cover, (Pinetree Type)
15					COVER, Cushion (60%)
					w/J5 - Trim Code
	KJ57 PD5	1			Quartz, (J5D5)
	KJ57 PF7	1			Brownstone, (J5FF)
					w/M5 - Trim Code, w/Vinyl Facing, 1994,95
	KJ77 PD5	1			Quartz, (M5D5)
	KJ77 PF3	1			Brownstone, (M5FF)
	KJ77 PV4	1			Champagne, (M5V4)
					w/M5 - Trim Code, w/Cloth Facing, 1994
	MB43 PD5	1			Quartz, (M5D5)
	MB43 PF3	1			Brownstone, (M5FF)
	MB43 PV4	1			Champagne, (M5V4)
					w/AL-- Trim Code
	KK05 PD5	1			Quartz, (ALD5)
	KK05 PF8	1			Driftwood, (ALFF)
	KK05 PV4	1			Champagne, (ALV4)
					w/BL - Trim Code
	KK15 PW8	1			Quartz, (BLDW)
	KK15 PF8	1			Driftwood, (BLFF)
	KK15 PV4	1			Champagne, (BLV4)
					w/TL Trim Code

MODEL CODES:

72=2 DR Wagon
74=4 DR Wagon
77=Open Body 93" Whlbase
78=Open Body 103" Whlbase - Export
T=2WD
J,N=4WD
U=4WD (RHD)

BODY STYLES:

YJ=Wrangler (4X4) "S"
Weangler (4X4) SE
Wrangler (4X4) Sahara
Wrangler (4X4) Renegade
XJ=Cherokee SE
Cherokee Sport
Cherokee Country
ZJ=Grand Cherokee SE
Grand Cherokee Laredo
Grand Cherolee Limited
ZG=Grand Cherokee European
Y1=Wrangler
X1=Cherokee
Z1=Grand Cherokee
KDX=Vehicles

AR = Use as Required - = Non Illustrated Part P.A.R. = Paint as Required

SEATS REAR SEAT, WITHOUT CHILD SEAT, 1994-95 GRAND CHEROKEE AND GRAND WAGONEER - ZJ
Figure IZJ-610

IZJ-610B

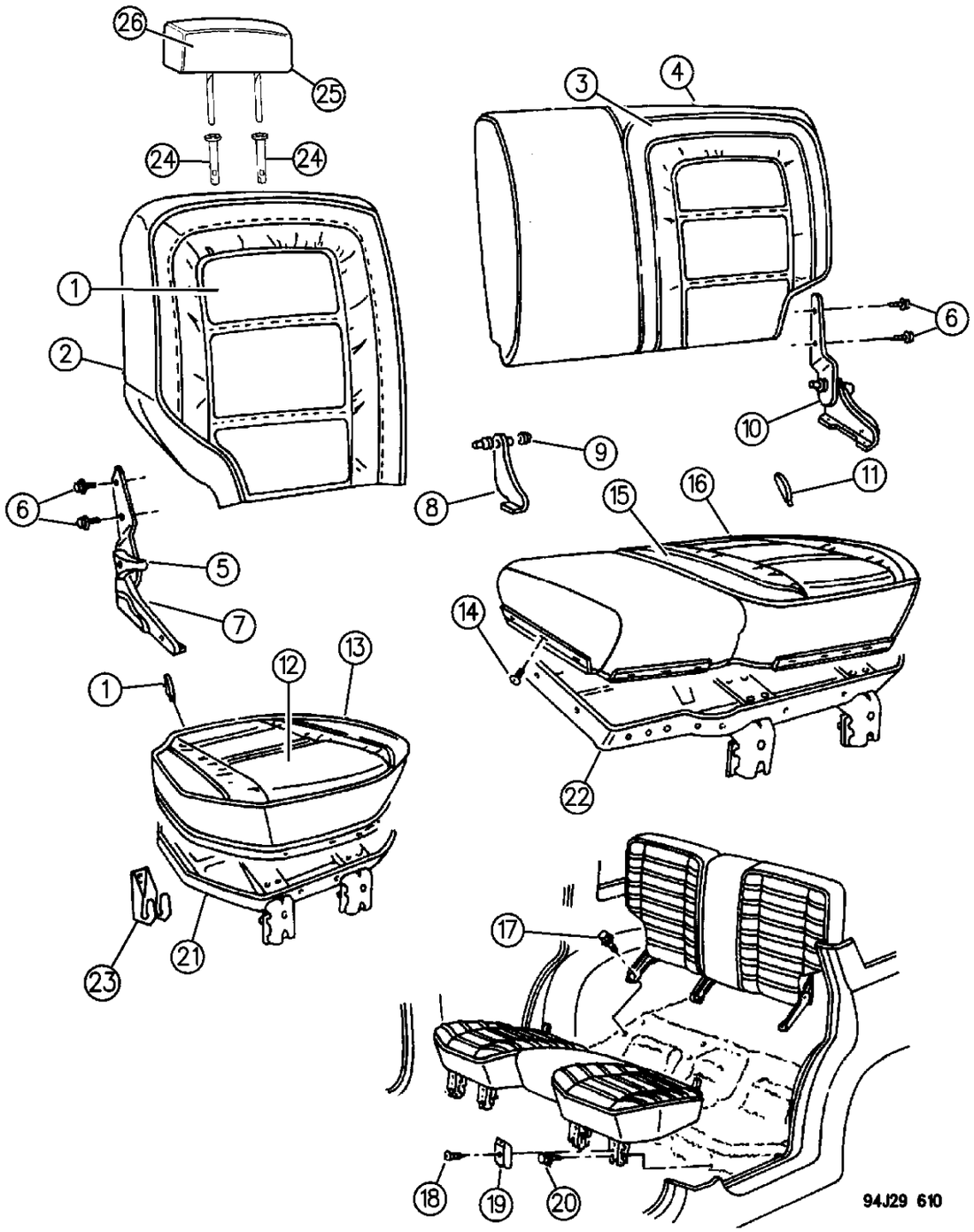

ITEM	PART NUMBER	QTY	BODY	MODEL	DESCRIPTION
	KP37 PD5	1			Quartz, (TLD5)
	KP37 PF8	1			Driftwood, (TLFF)
					w/M7 - Trim Code, w/Vinyl Facing, EXPORT
	KJ77 PD5	1			Quartz, (M7D5)
	KJ77 PF7	1			Brownstone, (M7FF)
	KJ77 PV4	1			Champagne, (M7V4)
					w/M7 - Trim Code, w/Cloth Facing, EXPORT
	MB43 PD5	1			Quartz, (M7D5)
	MB43 PF7	1			Brownstone, (M7FF)
	MB43 PV4	1			Champagne, (M7V4)
					1995
	MC15 RJ4	1			Gold, 1995, (DLVJ)
16					CUSHION, w/Spring/Frame Pad and Cover (60%)
					w/J5 - Trim Code
					(Use Up To 7-9-93)
	KJ55 PD5	1			Quartz, (J5D5)
	KJ55 PF7	1			Brownstone, (J5FF)
					(Use After 7-9-93)
	LB09 PD5	1			Quartz, (J5D5)
	LB09 PF7	1			Brownstone, (J5FF)
					1995
	MB33 RDD	1			Quartz, (J5D5)
	MB33 RF7	1			Brownstone, (J5FF)
					w/M5 - Trim Code, w/Vinyl Facing
					Up To 7-9-93
	KJ73 PD5	1			Quartz, (M5D5)
	KJ73 PF3	1			Brownstone, (M5FF)
	KJ73 PV4	1			Champagne, (M5V4)
					After 7-9-93
	LB11 PD5	1			Quartz, (M5D5)
	LB11 PF3	1			Brownstone, (M5FF)
	LB11 PV4	1			Champagne, (M5V4)
					w/Cloth Facing, Export
	MB41 PD5	1			Quartz, (M5D5)
	MB41 PF3	1			Brownstone, (M5FF)
	MB41 PV4	1			Champagne, (M5V4)
					1995
	MC27 RD5	1			Quartz, (M5D5)
	MC27 RF7	1			Brownstone, (M5FF)
	MC27 RV4	1			Champagne, (M5V4)
					w/AL - Trim Code
					(Use Up To 7-9-93)

MODEL CODES:

72=2 DR Wagon
74=4 DR Wagon
77=Open Body 93" Whlbase
78=Open Body 103" Whlbase - Export
T=2WD
J,N=4WD
U=4WD (RHD)

BODY STYLES:

YJ=Wrangler (4X4) "S"
Weangler (4X4) SE
Wrangler (4X4) Sahara
Wrangler (4X4) Renegade
XJ=Cherokee SE
Cherokee Sport
Cherokee Country
ZJ=Grand Cherokee SE
Grand Cherokee Laredo
Grand Cherolee Limited
ZG=Grand Cherokee European
Y1=Wrangler
X1=Cherokee
Z1=Grand Cherokee
KDX=Vehicles

AR = Use as Required - = Non Illustrated Part P.A.R. = Paint as Required

SEATS REAR SEAT, WITHOUT CHILD SEAT, 1994-95 GRAND CHEROKEE AND GRAND WAGONEER - ZJ
Figure IZJ-610

IZJ-610B

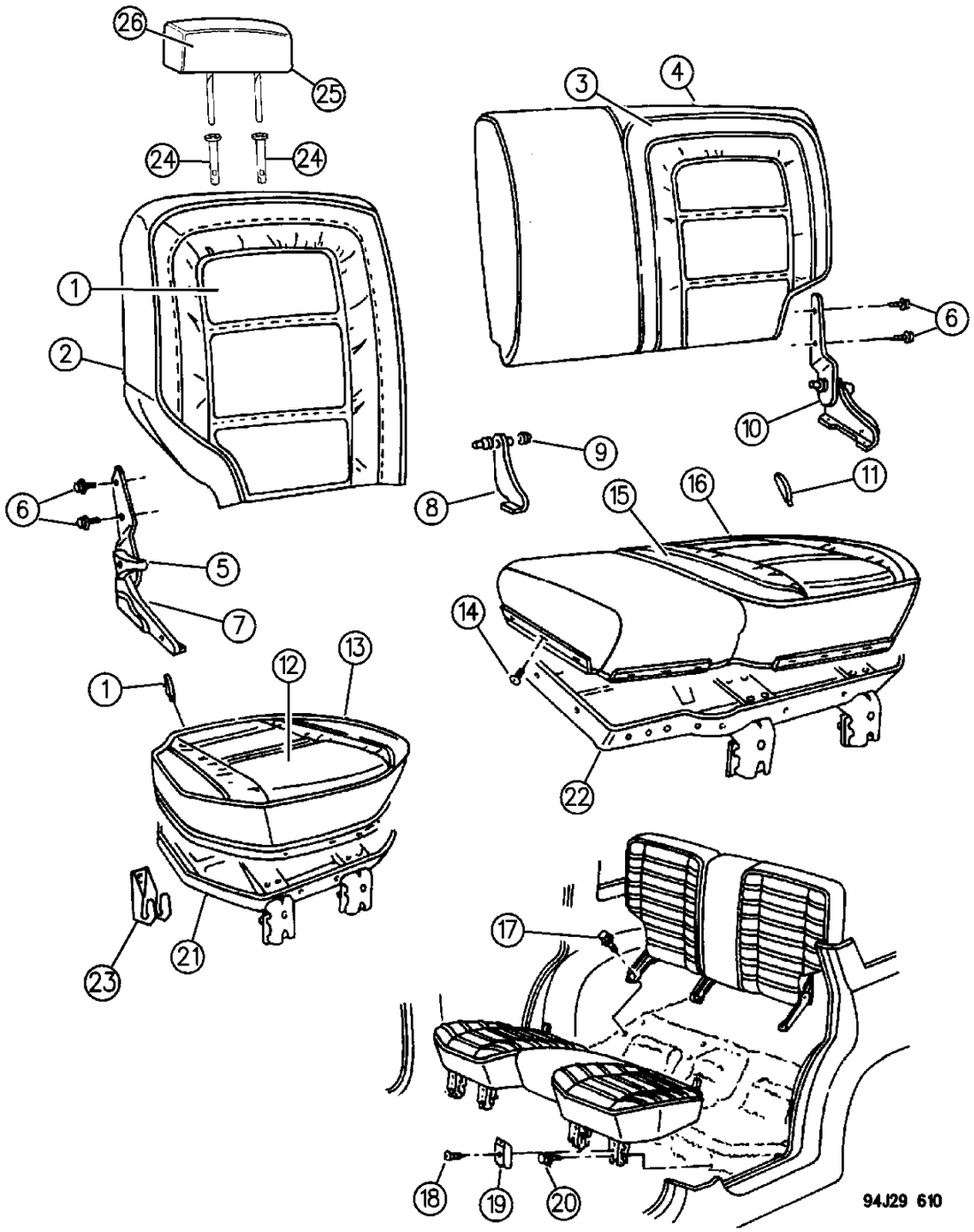

ITEM	PART NUMBER	QTY	BODY	MODEL	DESCRIPTION
	KK03 PD5	1			Quartz, (ALD5)
	KK03 PF8	1			Driftwood, (ALFF)
	KK03 PV4	1			Champagne, (ALV4)
					(Use After 7-9-93)
	LB13 PD5	1			Quartz, (ALD5)
	LB13 PF8	1			Driftwood, (ALFF)
	LB13 PV4	1			Champagne, (ALV4)
					1995
	MC29 RD5	1			Quartz, (ALD5)
	MC29 RF8	1			Driftwood, (ALFF)
	MC29 RV4	1			Champagne, (ALV4)
					w/BL - Trim Code
					(Use Up To 7-9-93)
	KK13 PW8	1			Quartz, (BLDW)
	KK13 PF8	1			Driftwood, (BLFF)
	KK13 PV4	1			Champagne, (BLV4)
					(Use After 7-9-93)
	LB15 PF8	1			Driftwood, (BLFF)
	LB15 PV4	1			Champagne, (BLV4)
	LB15 PW8	1			Quartz, (BLDW)
					1995
	MC31 RW8	1			Quartz, (BLDW)
	MC31 RF6	1			Driftwood, (BLFF)
	MC31 RV4	1			Champagne, (BLV4)
					w/TL Trim Code
					(Use Up To 7-9-93)
	KP35 PD5	1			Quartz, (TLD5)
	KP35 PF8	1			Driftwood, (TLFF)
					(Use After 7-9-93)
	LB17 PD5	1			Quartz, (TLD5)
	LB17 PF8	1			Driftwood, (TLFF)
					1995
	MC33 RD5	1			Quartz, (TLD5)
	MC33 RF8	1			Driftwood, (TLFF)
					w/M7 - Trim Code, w/Vinyl Facing, EXPORT
					Up to 7-9-93
	KJ73 PD5	1			Quartz, (M5D5)
	KJ73 PF7	1			Brownstone, (M7FF)
	KJ73 PV4	1			Champagne, (M7V4)
					After 7-9-93
	LB11 PD5	1			Quartz, (M7D5)
	LB11 PF7	1			Brownstone, (M7FF)

MODEL CODES:

72=2 DR Wagon
74=4 DR Wagon
77=Open Body 93" Whlbase
78=Open Body 103" Whlbase - Export
T=2WD
J,N=4WD
U=4WD (RHD)

BODY STYLES:

YJ=Wrangler (4X4) "S"
Weangler (4X4) SE
Wrangler (4X4) Sahara
Wrangler (4X4) Renegade
XJ=Cherokee SE
Cherokee Sport
Cherokee Country
ZJ=Grand Cherokee SE
Grand Cherokee Laredo
Grand Cherolee Limited
ZG=Grand Cherokee European
Y1=Wrangler
X1=Cherokee
Z1=Grand Cherokee
KDX=Vehicles

AR = Use as Required - = Non Illustrated Part P.A.R. = Paint as Required

SEATS REAR SEAT, WITHOUT CHILD SEAT, 1994-95 GRAND CHEROKEE AND GRAND WAGONEER - ZJ
Figure IZJ-610

IZJ-610B

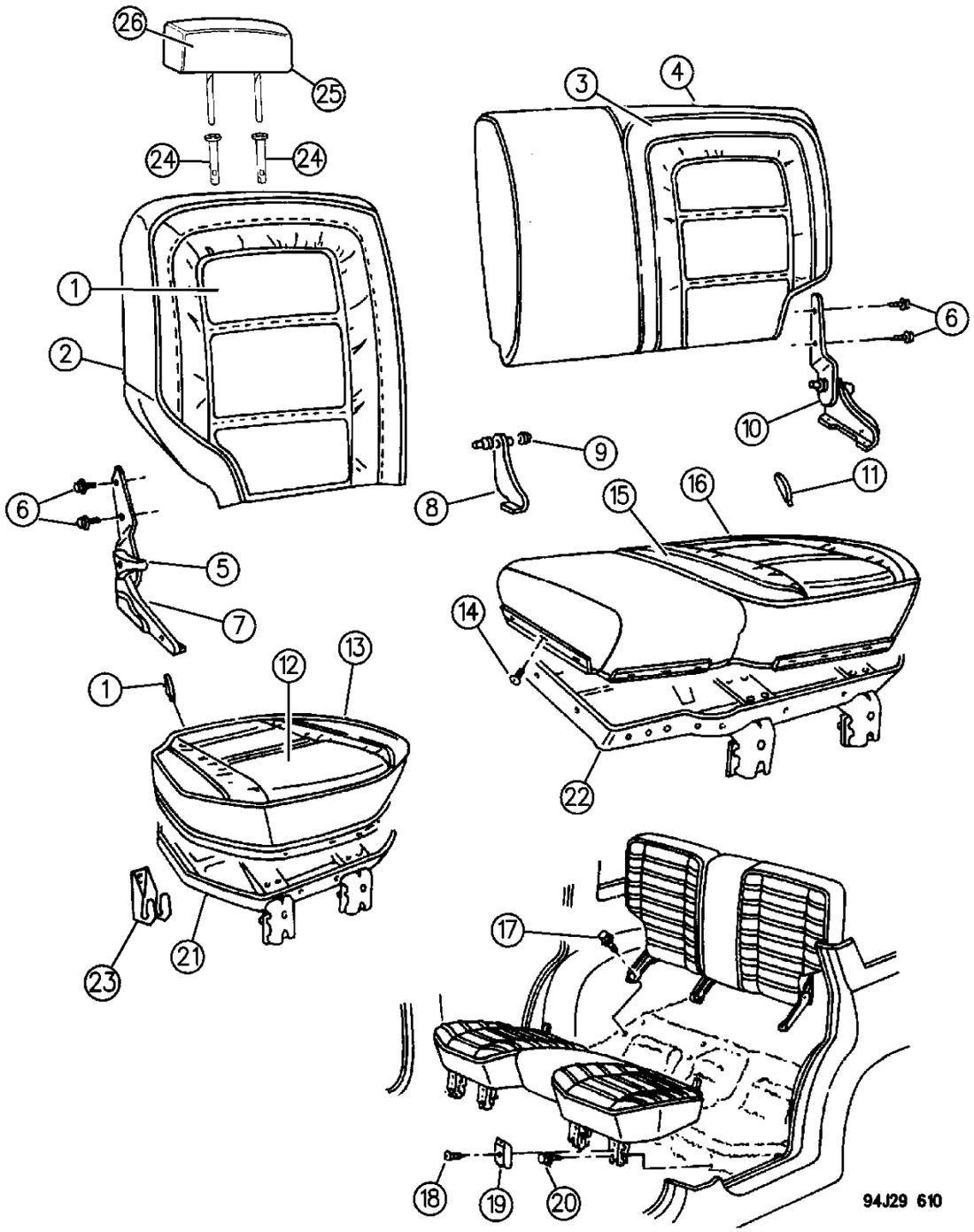

ITEM	PART NUMBER	QTY	BODY	MODEL	DESCRIPTION
	LB11 PV4	1			Champagne, (M7PV)
					w/Cloth Facing
	MB41 PD5	1			Quartz, (M7D5)
	MB41 PF7				Brownstone, (M7FF)
	MB41 PV4	1			Champagne, (M7V4)
					w/DL Trim Code
	MC13 RJ4	1			Gold, 1995, (DLVJ)
17	6503 719	6			SCREW and WASHER, Pivot and Latch to Floor
18		4			SCREW, (not serviced, use 8 - 18 X .375)
19	5503 0548	4			COVER, Hinge
20	6100 548	8			SCREW and WASHER, Cushion Hinge To Floor
21					PANEL, 40%, Cushion Base, Includes Hinges
	4762 068	1			Up to 7-9-93
	4762 904	1			After 7-9-93
	4778 382	1			1995
	4778 410	1			1995, EXPORT
	4762 904	1			(Use After 7-9-93)
22					PANEL, 60%, Cushion Base, Includes Hinges
	4762 069	1			Up to 7-9-93
	4762 905	1			After 7-9-93
	4778 383	1			1995
	4778 411	1			1995, EXPORT
23	5519 5551	4			HINGE PLATE, Rear Seat Cushion ***
24					CYLINDER, Headrest
	4723 834	AR			w/Latch, (w/o Latch Not Serviced Use 4723834)
	4761 521	AR			Stowage Cylinder (Found In Rear Seat Cushion For Head Rest Stowage)
25					HEADREST, w/Pad and Cover
					w/AL - TRIM CODE
	KJ28 MD5	2			Quartz, (ALD5,TLD5)
	KJ28 MF8	2			Driftwood, (ALFF,TLFF)
	KJ28 MV4	2			Champagne, (ALV4, DLVJ)
					w/ABE - Export Equipment Package
					1994
	KP13 PD5	2			Quartz, (ALD5) European
	KP13 PF8	2			Driftwood, (ALFF) European
	KP13 PV4	2			Champagne, (ALV4) European
					1995
	MW50 RF8	2			Driftwood, (ALFF), EUROPE
					w/BL - TRIM CODE
	KJ29 MF8	2			Driftwood, (BLFF)
	KJ29 MV4	2			Champagne, (BLV4)

MODEL CODES:

72=2 DR Wagon
74=4 DR Wagon
77=Open Body 93" Whlbase
78=Open Body 103" Whlbase - Export
T=2WD
J,N=4WD
U=4WD (RHD)

BODY STYLES:

YJ=Wrangler (4X4) "S"
Weangler (4X4) SE
Wrangler (4X4) Sahara
Wrangler (4X4) Renegade
XJ=Cherokee SE
Cherokee Sport
Cherokee Country
ZJ=Grand Cherokee SE
Grand Cherokee Laredo
Grand Cherolee Limited
ZG=Grand Cherokee European
Y1=Wrangler
X1=Cherokee
Z1=Grand Cherokee
KDX=Vehicles

AR = Use as Required - = Non Illustrated Part P.A.R. = Paint as Required

SEATS REAR SEAT, WITHOUT CHILD SEAT, 1994-95 GRAND CHEROKEE AND GRAND WAGONEER - ZJ
Figure IZJ-610

IZJ-610B

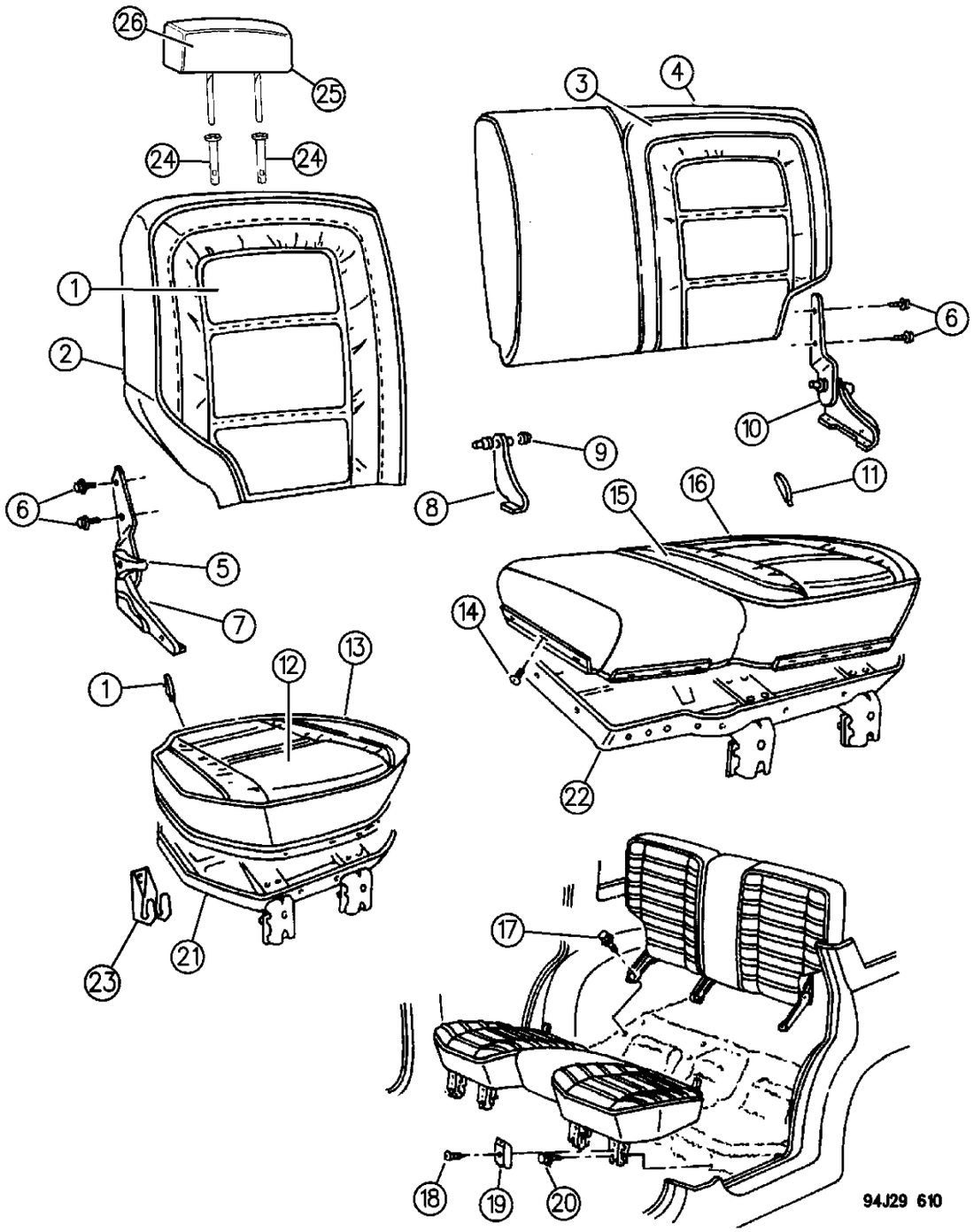

ITEM	PART NUMBER	QTY	BODY	MODEL	DESCRIPTION
	KJ29 MW8	2			Quartz, (BLDW)
					w/ABE - Export Equipment Package
					1994
	KP18 PF8	2			Driftwood, (BLFF) European
	KP18 PV4	2			Champagne, (BLV4) European
	KP18 PW8	2			Quartz, (BLDW) European
					1995
	MW51 RF6	2			Driftwood, (BLFF), EUROPE
					w/J5 - TRIM CODE
	KJ50 PD5	2			Quartz, (J5D5)
	KJ50 PF7	2			Driftwood, (J5FF)
					w/M7 - TRIM CODE, EUROPE
					1994
	KJ30 PD5	2			Quartz, (M7D5), EUROPE
	KJ30 PF7	2			Driftwood, (M7FF), EUROPE
	KJ30 PV4	2			Champagne, (M7V4), EUROPE
					1995
	MW49 RD5	2			Quartz, (M7D5), EUROPE
					w/M5 - TRIM CODE
	KJ66 PD5	2			Quartz, (M5D5)
	KJ66 PF3	2			Driftwood, (M5FF)
	KJ66 PV4	2			Champagne, (M5V4)
-	4798 107	AR			SLLEVE, (Used Inside Headrest Pad, Slips Over Post at Bottom of 'U' Section.) ***
26					COVER, Headrest
					w/AL - TRIM CODE
	GS50 LD5	2			Quartz, (ALD5)
	GS50 LF8	2			Driftwood, (ALFF)
	GS50 MV4	2			Champagne, (ALV4, DLVJ)
					w/ABE - Export Equipment Package
	KP23 PD5	2			Quartz, (ALD5)
	KP23 PF8	2			Driftwood, (ALFF)
	KP23 PV4	2			Champagne, (ALV4)
					w/BL - TRIM CODE
	HG77 MF8	2			Driftwood, (BLFF)
	HG77 MV4	2			Champagne, (BLV4)
	HG77 MW8	2			Quartz, (BLDW)
					w/ABE - Export Equipment Package
	KP24 PF8	2			Driftwood, (BLFF)
	KP24 PV4	2			Champagne, (BLV4)
	KP24 PW8	2			Quartz, (BLDW)
					w/J5 - TRIM CODE

MODEL CODES:

72=2 DR Wagon
74=4 DR Wagon
77=Open Body 93" Whlbase
78=Open Body 103" Whlbase - Export
T=2WD
J,N=4WD
U=4WD (RHD)

BODY STYLES:

YJ=Wrangler (4X4) "S"
Weangler (4X4) SE
Wrangler (4X4) Sahara
Wrangler (4X4) Renegade
XJ=Cherokee SE
Cherokee Sport
Cherokee Country
ZJ=Grand Cherokee SE
Grand Cherokee Laredo
Grand Cherolee Limited
ZG=Grand Cherokee European
Y1=Wrangler
X1=Cherokee
Z1=Grand Cherokee
KDX=Vehicles

AR = Use as Required - = Non Illustrated Part P.A.R. = Paint as Required

SEATS REAR SEAT, WITHOUT CHILD SEAT, 1994-95 GRAND CHEROKEE AND GRAND WAGONEER - ZJ
Figure IZJ-610

IZJ-610B

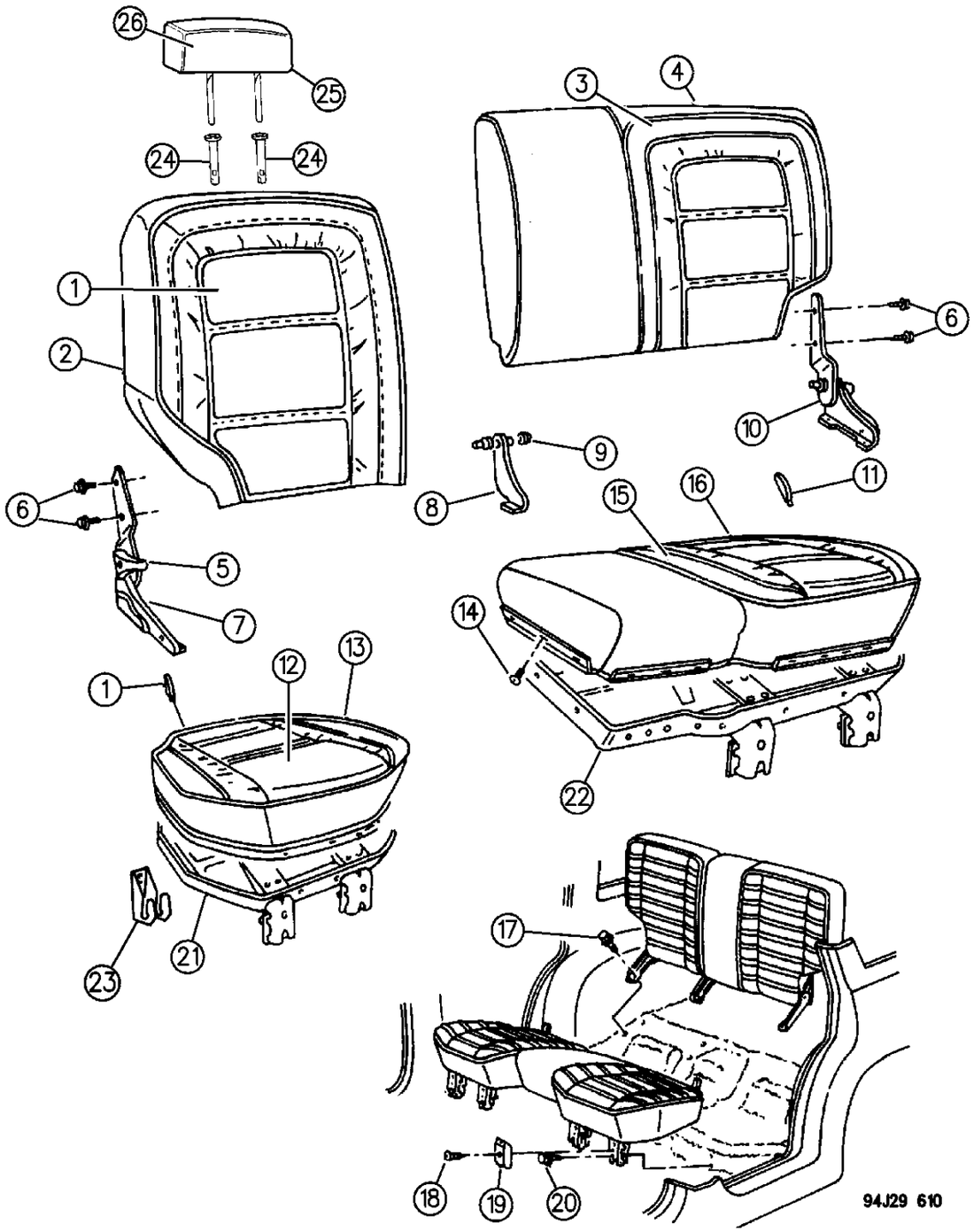

ITEM	PART NUMBER	QTY	BODY	MODEL	DESCRIPTION
	KJ51 PD5	2			Quartz, (J5D5)
	KJ51 PF7	2			Driftwood, (J5FF)
					w/M7 TRIM CODE, EXPORT
	KP21 PD5	2			Quartz, (M7D5)
	KP21 PF7	2			Brownstone, (M7FF)
	KP21 PV4	2			Champagne, (M7V4)
					w/M5 - TRIM CODE
	KJ67 PD5	2			Quartz, (M5D5)
	KJ67 PF3	2			Driftwood, (M5FF)
	KJ67 PV4	2			Champagne, (M5V4)

MODEL CODES:

72=2 DR Wagon
74=4 DR Wagon
77=Open Body 93" Whlbase
78=Open Body 103" Whlbase - Export
T=2WD
J,N=4WD
U=4WD (RHD)

BODY STYLES:

YJ=Wrangler (4X4) "S"
Weangler (4X4) SE
Wrangler (4X4) Sahara
Wrangler (4X4) Renegade

XJ=Cherokee SE
Cherokee Sport
Cherokee Country

ZJ=Grand Cherokee SE
Grand Cherokee Laredo
Grand Cherolee Limited
ZG=Grand Cherokee European

Y1=Wrangler
X1=Cherokee
Z1=Grand Cherokee
KDX=Vehicles

AR = Use as Required - = Non Illustrated Part P.A.R. = Paint as Required

REAR SEAT, WITHOUT CHILD SEAT 1996, GRAND CHERKEE, ZJ
Figure IZJ-615

IZJ-615A

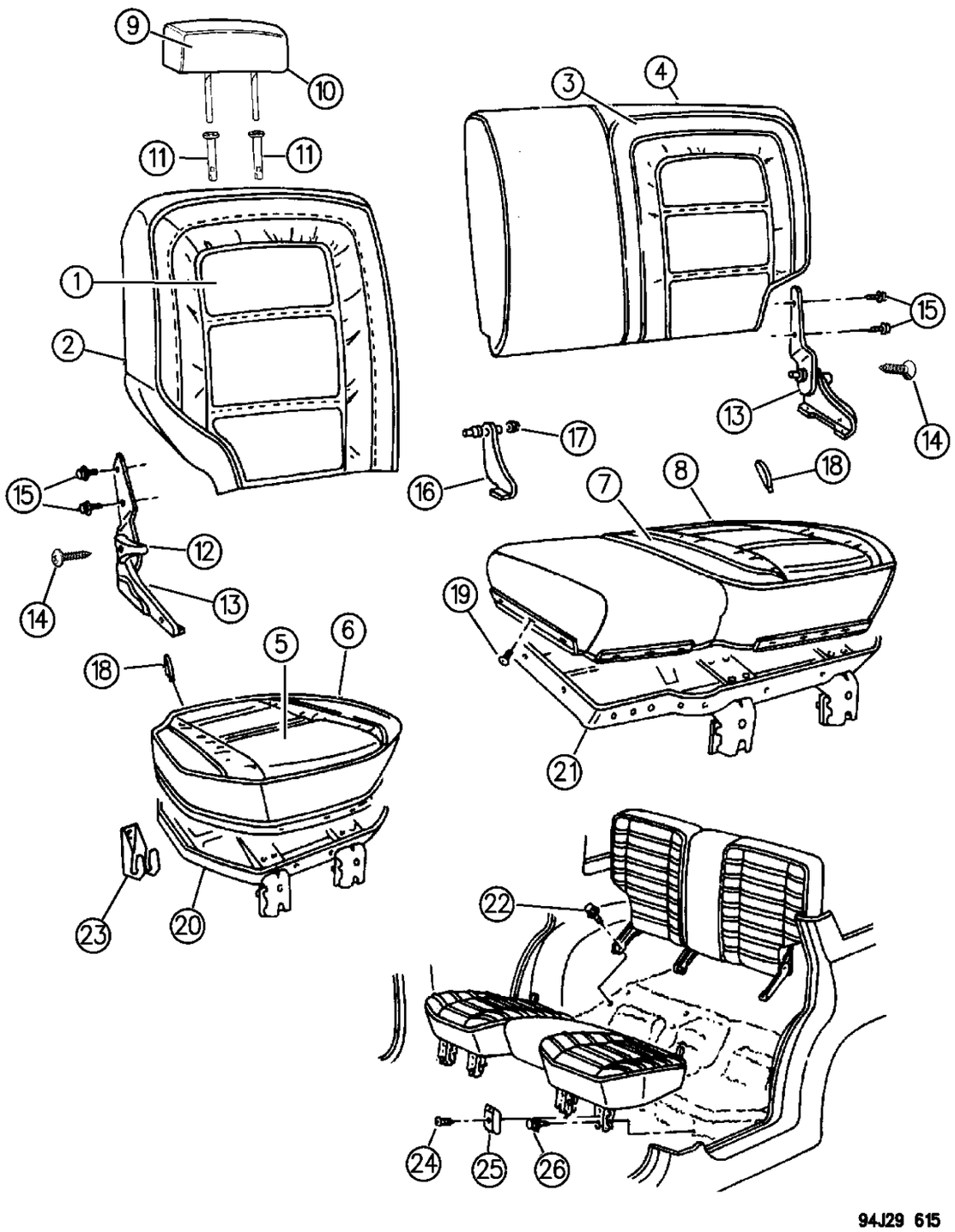

ITEM	PART NUMBER	QTY	BODY	MODEL	DESCRIPTION
1					COVER, Seat Back, (40%)
					w/CL - Trim Code
	PM76 SAZ	1			Agate
	PM76 SC3	1			Mist Gray
	PM76 ST6	1			Saddle
					w/EL - Trim Code
	PM78 SAZ	1			Agate
	PM78 ST6	1			Saddle
					w/F5 - Trim Code
	PM70 SAZ	1			Agate
	PM70 SC3	1			Mist Gray
	PM70 ST6	1			Saddle
					w/GL - Trim Code
	PM74 SJ4	1			Gold
2					BACK, w/Spring/Frame Pad and Cover
					w/CL - Trim Code
	PN18 SAZ	1			Agate
	PN18 SC3	1			Mist Gray
	PN18 ST6	1			Saddle
					w/EL - Trim Code
	PN22 SAZ	1			Agate
	PN22 ST6	1			Saddle
					w/F5 - Trim Code
	PN24 SAZ	1			Agate
	PN24 SC3	1			Mist Gray
	PN24 ST6	1			Saddle
					w/GL - Trim Code
	PN26 SJ4	1			Gold
3					COVER, Seat Back (60%)
					w/CL Trim Code
	PM77 SAZ	1			Agate
	PM77 SC3	1			Mist Gray
	PM77 ST6	1			Saddle
					w/EL Trim Code
	PM79 SAZ	1			Agate
	PM79 ST6	1			Saddle
					w/F5 - Trim Code
	PM71 SAZ	1			Agate
	PM71 SC3	1			Mist Gray
	PM71 ST6	1			Saddle
					w/GL - Trim Code
	PM75 SJ4	1			Gold

MODEL CODES:

72=2 DR Wagon
74=4 DR Wagon
77=Open Body 93" Whlbase
78=Open Body 103" Whlbase - Export
T=2WD
J,N=4WD
U=4WD (RHD)

BODY STYLES:

YJ=Wrangler (4X4) "S"
Weangler (4X4) SE
Wrangler (4X4) Sahara
Wrangler (4X4) Renegade
XJ=Cherokee SE
Cherokee Sport
Cherokee Country
ZJ=Grand Cherokee SE
Grand Cherokee Laredo
Grand Cherolee Limited
ZG=Grand Cherokee European
Y1=Wrangler
X1=Cherokee
Z1=Grand Cherokee
KDX=Vehicles

AR = Use as Required - = Non Illustrated Part P.A.R. = Paint as Required

REAR SEAT, WITHOUT CHILD SEAT 1996, GRAND CHERKEE, ZJ
Figure IZJ-615

IZJ-615A

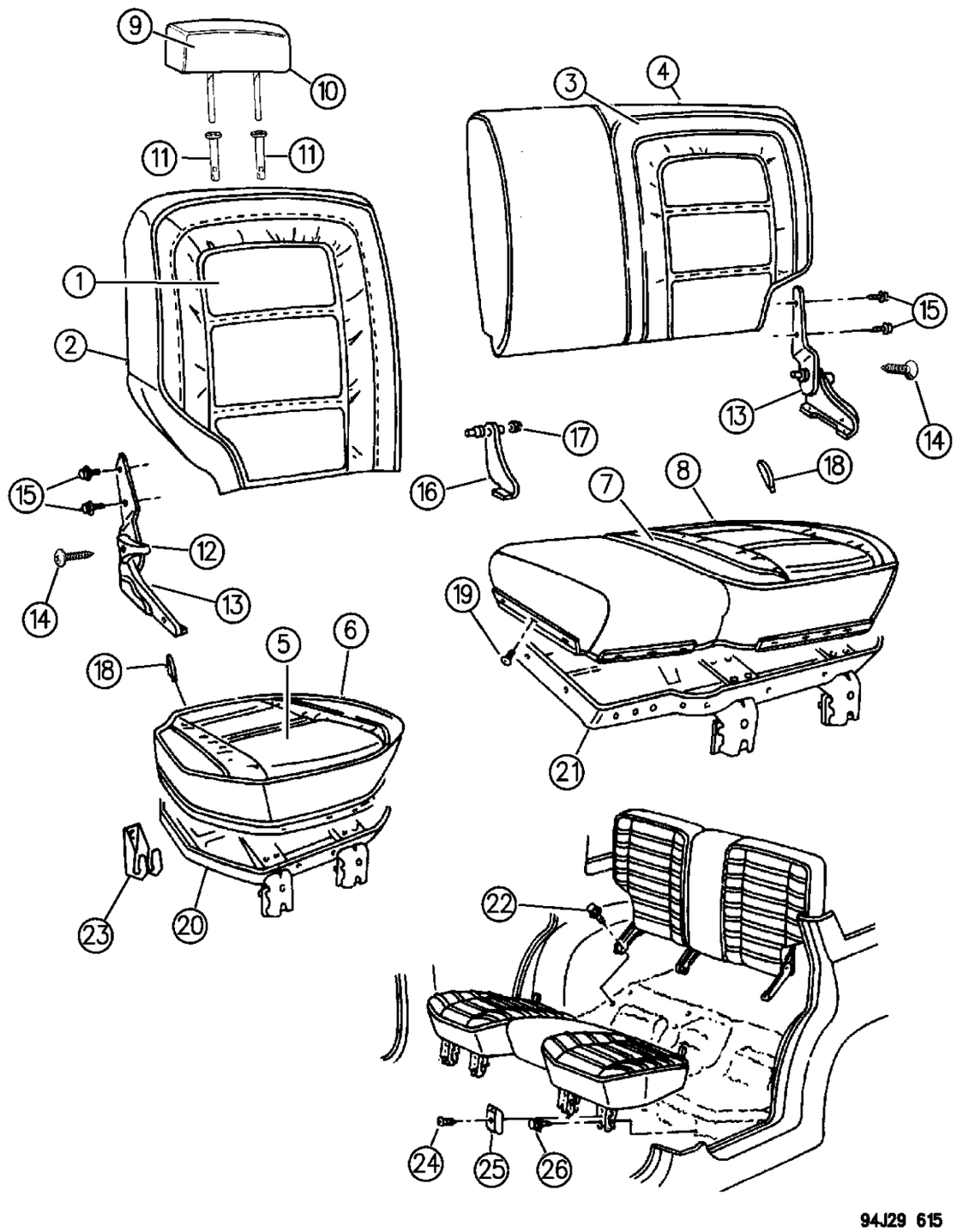

ITEM	PART NUMBER	QTY	BODY	MODEL	DESCRIPTION
4					BACK, w/Spring/Frame Pad and Cover, (60%)
					w/CL Trim Code
	PN19 SAZ	1			Agate
	PN19 SC3	1			Mist Gray
	PN19 ST6	1			Saddle
					w/EL - Trim Code
	PN23 SAZ	1			Agate
	PN23 ST6	1			Saddle
					w/F5 - Trim Code
	PN25 SAZ	1			Agate
	PN25 SC3	1			Mist Gray
	PN25 ST6	1			Saddle
					w/GL - Trim Code
	PN27 SJ4	1			Gold
5					COVER, Cushion (40%)
					w/CL - Trim Code
	PM82 SAZ	1			Agate
	PM82 SC3	1			Mist Gray
	PM82 ST6	1			Saddle
					w/EL - Trim Code
	PM80 SAZ	1			Agate
	PM80 ST6	1			Saddle
					w/F5 - Trim Code
	PM86 SAZ	1			Agate
	PM86 SC3	1			Mist Gray
	PM86 ST6	1			Saddle
					w/GL - Trim Code
	PM84 SJ4	1			Gold
6					CUSHION, w/Spring/Frame Pad and Cover, (40%)
					w/CL - Trim Code
					Domestic
	PN30 SAZ	1			Agate
	PN30 SC3	1			Mist Gray
	PN30 ST6	1			Saddle
					EXPORT, (ECE)
	PN44 SAZ	1			Agate
	PN44 ST6	1			Saddle
					w/EL - Trim Code
	PN34 SAZ	1			Agate
	PN34 ST6	1			Saddle
					w/F5 - Trim Code
					Domestic

MODEL CODES:

72=2 DR Wagon
74=4 DR Wagon
77=Open Body 93" Whlbase
78=Open Body 103" Whlbase - Export
T=2WD
J,N=4WD
U=4WD (RHD)

BODY STYLES:

YJ=Wrangler (4X4) "S"
Weangler (4X4) SE
Wrangler (4X4) Sahara
Wrangler (4X4) Renegade
XJ=Cherokee SE
Cherokee Sport
Cherokee Country
ZJ=Grand Cherokee SE
Grand Cherokee Laredo
Grand Cherolee Limited
ZG=Grand Cherokee European
Y1=Wrangler
X1=Cherokee
Z1=Grand Cherokee
KDX=Vehicles

AR = Use as Required - = Non Illustrated Part P.A.R. = Paint as Required

REAR SEAT, WITHOUT CHILD SEAT 1996, GRAND CHERKEE, ZJ
Figure IZJ-615

IZJ-615A

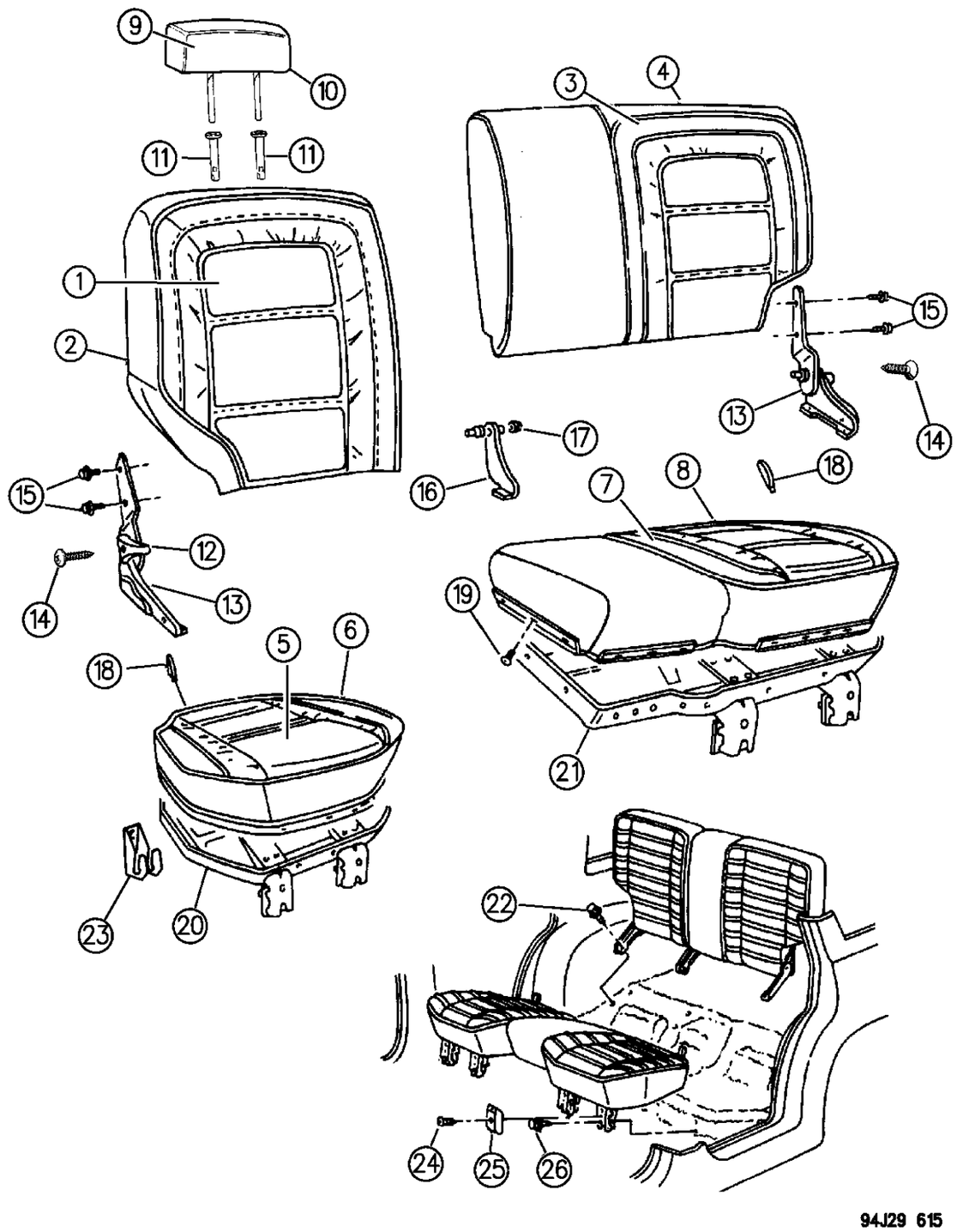

ITEM	PART NUMBER	QTY	BODY	MODEL	DESCRIPTION
	PN40 SAZ	1			Agate
	PN40 SC3	1			Mist Gray
	PN40 ST6	1			Saddle
					EXPORT, (ECE)
	PN46 SAZ	1			Agate
	PN46 SC3	1			Mist Gray
	PN46 ST6	1			Saddle
					w/GL - Trim Code
	PN42 SJ4	1			Gold
7					COVER, Cushion, (60%)
					w/CL - Trim Code
	PM83 SAZ	1			Agate
	PM83 SC3	1			Mist Gray
	PM83 ST6	1			Saddle
					w/EL - Trim Code
	PM81 SAZ	1			Agate
	PM81 ST6	1			Saddle
					w/F5 - Trim Code
	PM87 SAZ	1			Agate
	PM87 SC3	1			Mist Gray
	PM87 ST6	1			Saddle
					w/GL - Trim Code
	PM85 SJ4	1			Gold
8					CUSHION, w/Spring/Frame Pad and Cover, (60%)
					w/CL - Trim Code
					Domestic
	PN31 SAZ	1			Agate
	PN31 SC3	1			Mist Gray
	PN31 ST6	1			Saddle
					EXPORT, (ECE)
	PN45 SAZ	1			Agate
	PN45 ST6	1			Saddle
					w/EL - Trim Code
	PN35 SAZ	1			Agate
	PN35 ST6	1			Saddle
					w/F5 - Trim Code
					Domestic
	PN41 SAZ	1			Agate
	PN41 SC3	1			Mist Gray
	PN41 ST6	1			Saddle
					EXPORT, (ECE)
	PN47 SAZ	1			Agate

MODEL CODES:

72=2 DR Wagon
74=4 DR Wagon
77=Open Body 93" Whlbase
78=Open Body 103" Whlbase - Export
T=2WD
J,N=4WD
U=4WD (RHD)

BODY STYLES:

YJ=Wrangler (4X4) "S"
Weangler (4X4) SE
Wrangler (4X4) Sahara
Wrangler (4X4) Renegade
XJ=Cherokee SE
Cherokee Sport
Cherokee Country
ZJ=Grand Cherokee SE
Grand Cherokee Laredo
Grand Cherolee Limited
ZG=Grand Cherokee European
Y1=Wrangler
X1=Cherokee
Z1=Grand Cherokee
KDX=Vehicles

AR = Use as Required - = Non Illustrated Part P.A.R. = Paint as Required

REAR SEAT, WITHOUT CHILD SEAT 1996, GRAND CHERKEE, ZJ
Figure IZJ-615

IZJ-615A

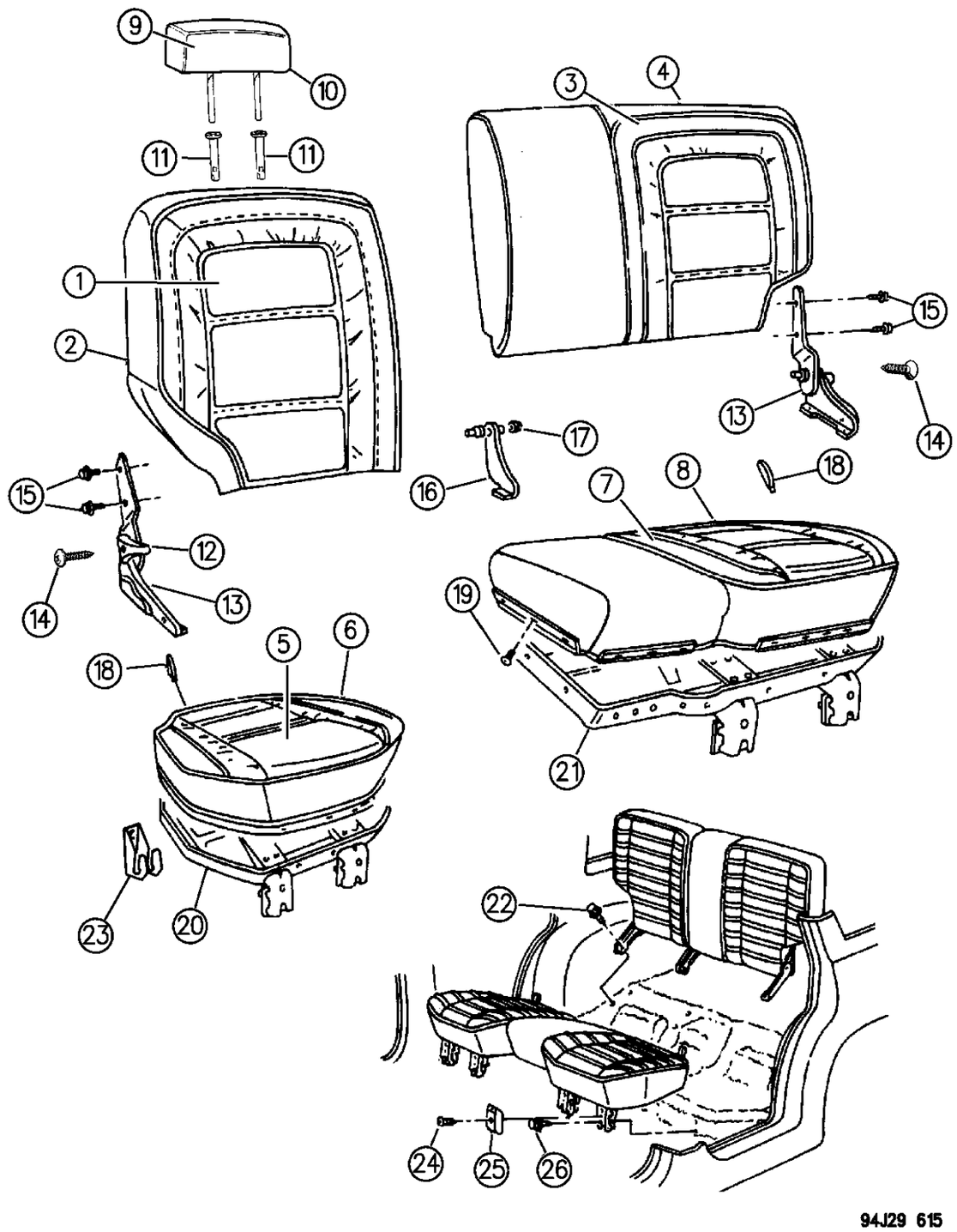

ITEM	PART NUMBER	QTY	BODY	MODEL	DESCRIPTION
	PN47 ST6	1			Saddle
					w/GL - Trim Code
	PN43 SJ4	1			Gold
9					COVER Headrest ***
					w/CL - Trim Code
					Domestic
	PM50 SAZ	2			Agate
	PM50 SC3	2			Mist Gray
	PM50 ST6	2			Saddle
					w/GL - Trim Code
	PM50 SJ4	2			Gold
					w/CL - Trim Code
					EXPORT, (ECE)
	PM51 SAZ	2			Agate
	PM51 ST6	2			Saddle
10					HEADREST ASSY. ***
					w/CL - Trim Code
					Domestic
	PM90 SAZ	2			Agate
	PM90 SC3	2			Mist Gray
	PM90 ST6	2			Saddle
					w/GL - Trim Code
	PM90 SJ4	2			Gold
					w/CL - Trim Code
					EXPORT, (ECE)
	PN16 SAZ	2			Agate
	PN16 ST6	2			Saddle
The following headrests are 'Pour-in-Place', therefore no covers wil be serviced. e Adhesive #312.					
					w/EL - Trim Code
	PN14 SAZ	2			Agate
	PN14 ST6	2			Spice
					w/F5 - Trim Code
					Domestic
	PN15 SAZ	1			Agate
	PN15 SC3	2			Mist Gray
	PN15 ST6	2			Saddle
					EXPORT, (ECE)
	PN17 SAZ	2			Agate
	PN17 SC3	2			Mist Gray
	PN17 ST6	2			Saddle
11		AR			CYLINDER, Headrest
	4723 834	AR			w/Latch, (w/o Latch Not Serviced Use 4723834)

MODEL CODES:

72=2 DR Wagon
74=4 DR Wagon
77=Open Body 93" Whlbase
78=Open Body 103" Whlbase - Export
T=2WD
J,N=4WD
U=4WD (RHD)

BODY STYLES:

YJ=Wrangler (4X4) "S"
Weangler (4X4) SE
Wrangler (4X4) Sahara
Wrangler (4X4) Renegade
XJ=Cherokee SE
Cherokee Sport
Cherokee Country
ZJ=Grand Cherokee SE
Grand Cherokee Laredo
Grand Cherolee Limited
ZG=Grand Cherokee European
Y1=Wrangler
X1=Cherokee
Z1=Grand Cherokee
KDX=Vehicles

AR = Use as Required - = Non Illustrated Part P.A.R. = Paint as Required

REAR SEAT, WITHOUT CHILD SEAT 1996, GRAND CHERKEE, ZJ
Figure IZJ-615

IZJ-615A

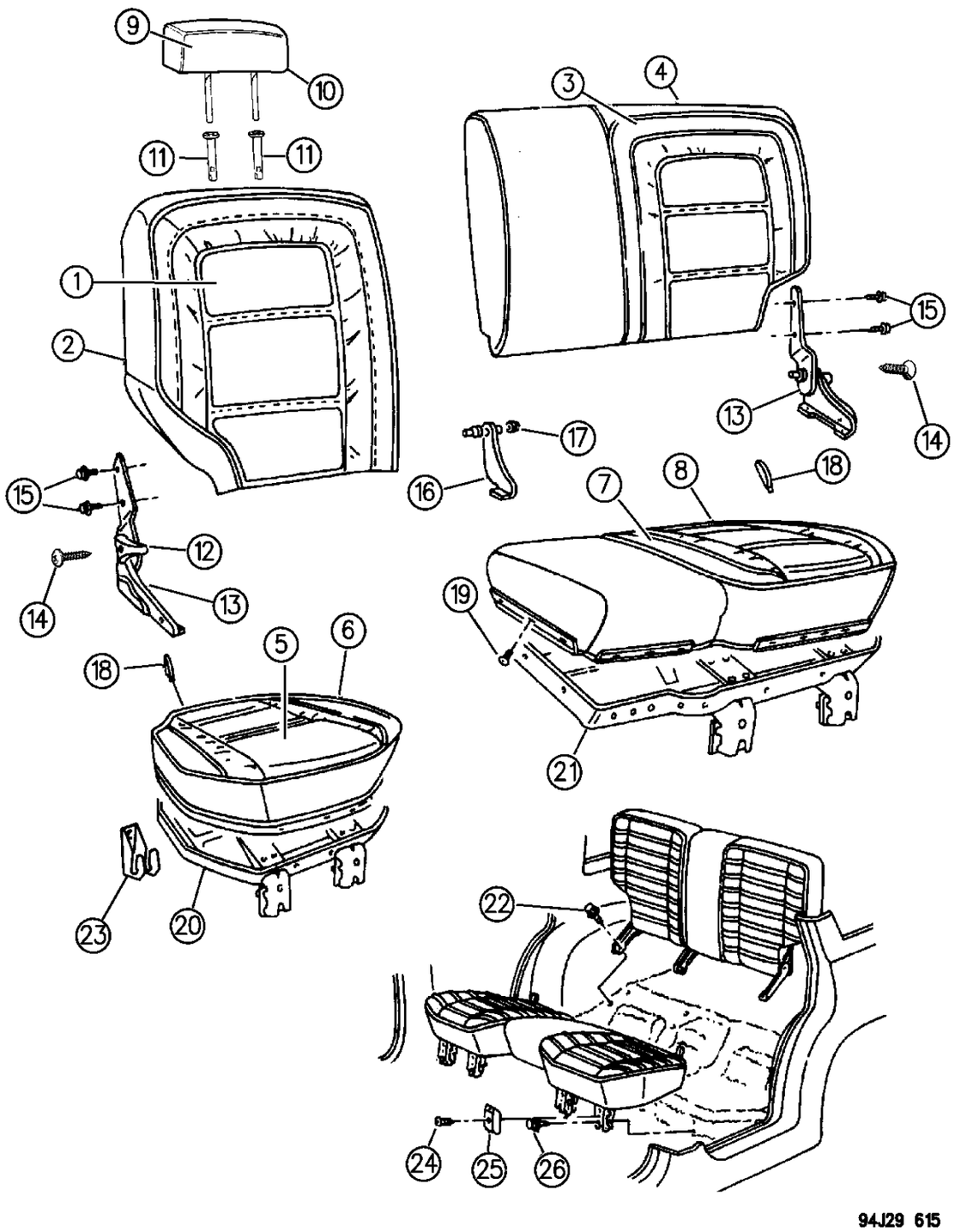

ITEM	PART NUMBER	QTY	BODY	MODEL	DESCRIPTION
	4864 985	AR			Stowage Cylinder, (Found in Rear Cushion For Headrest Stowage)
12	4773 930-1	1			HANDLE, Latch Actuating, (Included with Item #13)
13	4773 932-3	1			LATCH ASSY., (Includes Latch, Handle, Cover, And Rivnut) ***
-	4720 586-7	1			COVER
-	4728 280	2			RIVNUT, (Attach Cover to Latch ***
14	4713 800	2			SCREW, Handle to Latch
15	4713 968-9	4			BOLT, Latch to Seat Back
16	4761 926	1			BRACKET, Center Pivot
17	4720 795	1			GROMMET, Center Pivot
18					STRAP, Pull - Rear Seat Cushion
	HC66 SAZ	2			Agate
	HC66 SC3	2			Mist Gray
	HC66 ST6	2			Saddle
19	4720 778	18			RETAINER, Cushion Cover
20					PANEL, 40%, Cushion base, Includes Hinges
	4778 382	1			
	4778 410	1			EXPORT
21					PANEL 60%, Cushion Base, Includes Hinges ***
	4778 383	1			
	4778 411	1			EXPORT
22	6503 719	6			SCREW and WASHER, Pivot and Latch to Floor
23	5519 5551	4			HINGE PLATE, Rear Seat Cushion ***
24		4			SCREW, (Not Serviced, 8-18x.375)
25	5503 0548	4			COVER, Hinge
26	6100 548	8			SCREW and WASHER, Cushion Hinge to Floor
	4728 952AB	1			TETHER PACKAGE, Child Seat ***

MODEL CODES:

72=2 DR Wagon
74=4 DR Wagon
77=Open Body 93" Whlbase
78=Open Body 103" Whlbase - Export
T=2WD
J,N=4WD
U=4WD (RHD)

BODY STYLES:

YJ=Wrangler (4X4) "S"
Weangler (4X4) SE
Wrangler (4X4) Sahara
Wrangler (4X4) Renegade
XJ=Cherokee SE
Cherokee Sport
Cherokee Country
ZJ=Grand Cherokee SE
Grand Cherokee Laredo
Grand Cherolee Limited
ZG=Grand Cherokee European
Y1=Wrangler
X1=Cherokee
Z1=Grand Cherokee
KDX=Vehicles

AR = Use as Required - = Non Illustrated Part P.A.R. = Paint as Required

REAR BENCH SEAT WITH CHILD SEAT 1995 GRAND CHEROKEE, ZJ
Figure IZJ-620

IZJ-620A

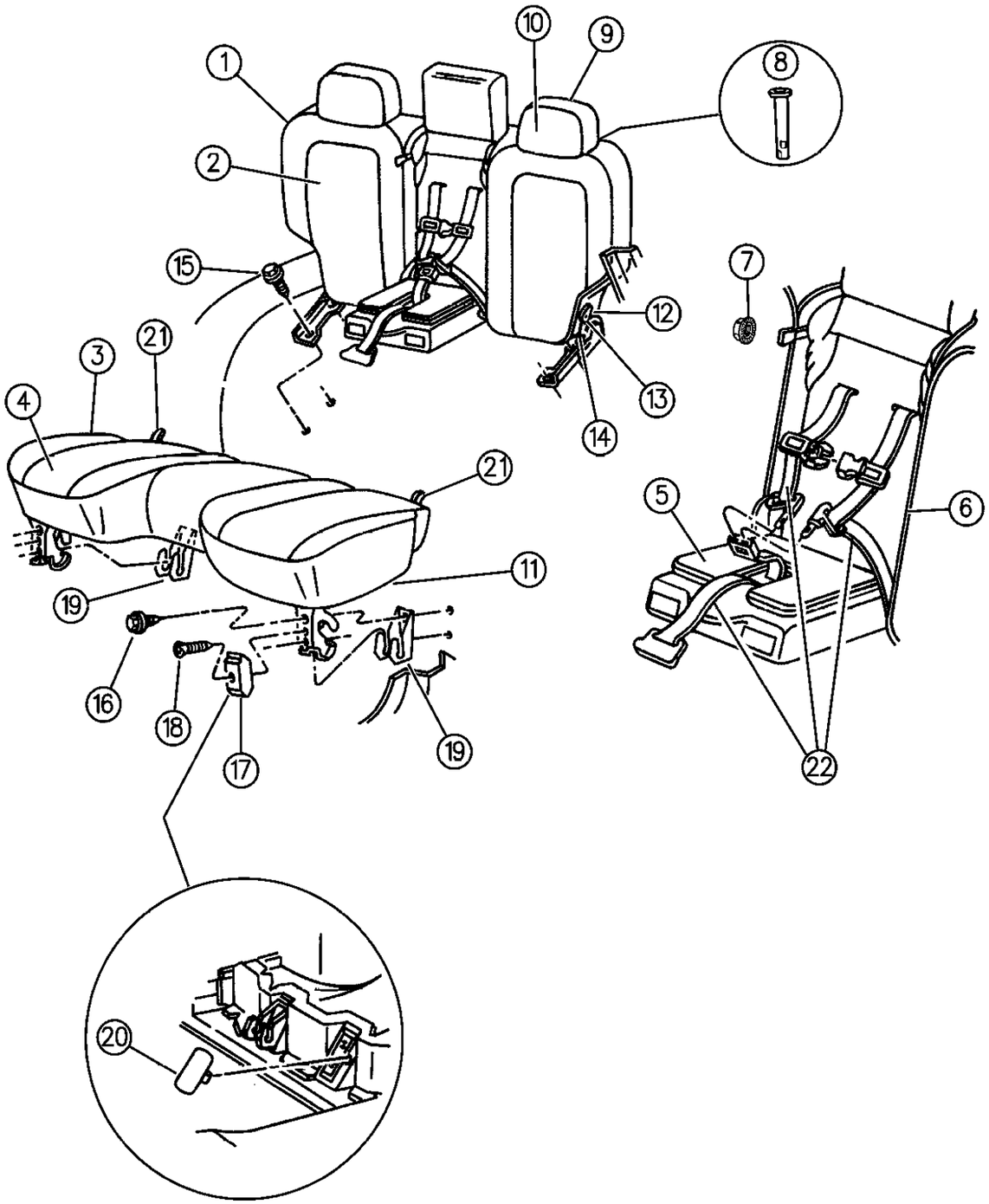

ITEM	PART NUMBER	QTY	BODY	MODEL	DESCRIPTION
1					BACK ASSEMBLY
	LR33 RDD	1			Quartz, (J5D5)
	LR62 RD5	1			Quartz, (M5D5, M7D5)
	LR75 RF8	1			Driftwood, (ALFF)
	LR79 RF6	1			Driftwood, (BLFF)
	MB18 RD5	1			Quartz, (TLD5)
2					COVER, Seat Back
	LR35 RDD	1			Quartz, (J5D5)
	LR63 RD5	1			Quartz, (M5D5, M7D5)
	LR76 RF8	1			Driftwood, (ALFF)
	LR80 RF6	1			Driftwood, (BLFF)
	MB19 RD5	1			Quartz, (TLD5)
3					CUSHION ASSY. ***
	LR58 RDD	1			Quartz, (J5D5)
	LR64 RD5	1			Quartz, (M5D5, M7D5)
	LR77 RF8	1			Driftwood, (ALFF)
	LR81 RF6	1			Driftwood, (BLFF)
	MB20 RD5	1			Quartz, (TLD5)
4					COVER, Seat Cushion
	LR59 RDD	1			Quartz, (J5D5)
	LR68 RD5	1			Quartz, (M5D5, M7D5)
	LR78 RF8	1			Driftwood, (ALFF)
	LR82 RF6	1			Driftwood, (BLFF)
	MB21 RD5	1			Quartz, (TLD5)
	4720 778	38			RETAINER, Cover to Base
5					PAD, Child Seat
	QK53 SAZ	1			Agate
	QK53 ST6	1			Saddle
6					SEAT MODULE, Integrated Child ***
	MF19 RDD	1			Quartz, (J5D5)
	MF20 RD5	1			Quartz, (M5D5)
	MF27 RD5	1			Quartz, (M7D5)
	MF22 RF8	1			Driftwood, (ALFF)
	MF28 RF8	1			Driftwood, EXPORT, (ALFF)
	MF21 RF6	1			Driftwood, (BLFF)
	MF29 RF6	1			Driftwood, EXPORT, (BLFF)
	MF22 RD5	1			Quartz, (TLD5)
					CANADA
	MF23 RDD	1			Quartz, (J5D5)
	MF24 RD5	1			Quartz, (M5D5)
	MF25 RF8	1			Driftwood, (ALFF)
	MF26 RF6	1			Driftwood, (BLFF)

MODEL CODES:

72=2 DR Wagon
74=4 DR Wagon
77=Open Body 93" Whlbase
78=Open Body 103" Whlbase - Export
T=2WD
J,N=4WD
U=4WD (RHD)

BODY STYLES:

YJ=Wrangler (4X4) "S"
Weangler (4X4) SE
Wrangler (4X4) Sahara
Wrangler (4X4) Renegade

XJ=Cherokee SE
Cherokee Sport
Cherokee Country

ZJ=Grand Cherokee SE
Grand Cherokee Laredo
Grand Cherolee Limited
ZG=Grand Cherokee European

Y1=Wrangler
X1=Cherokee
Z1=Grand Cherokee
KDX=Vehicles

AR = Use as Required - = Non Illustrated Part P.A.R. = Paint as Required

REAR BENCH SEAT WITH CHILD SEAT 1995 GRAND CHEROKEE, ZJ
Figure IZJ-620

IZJ-620A

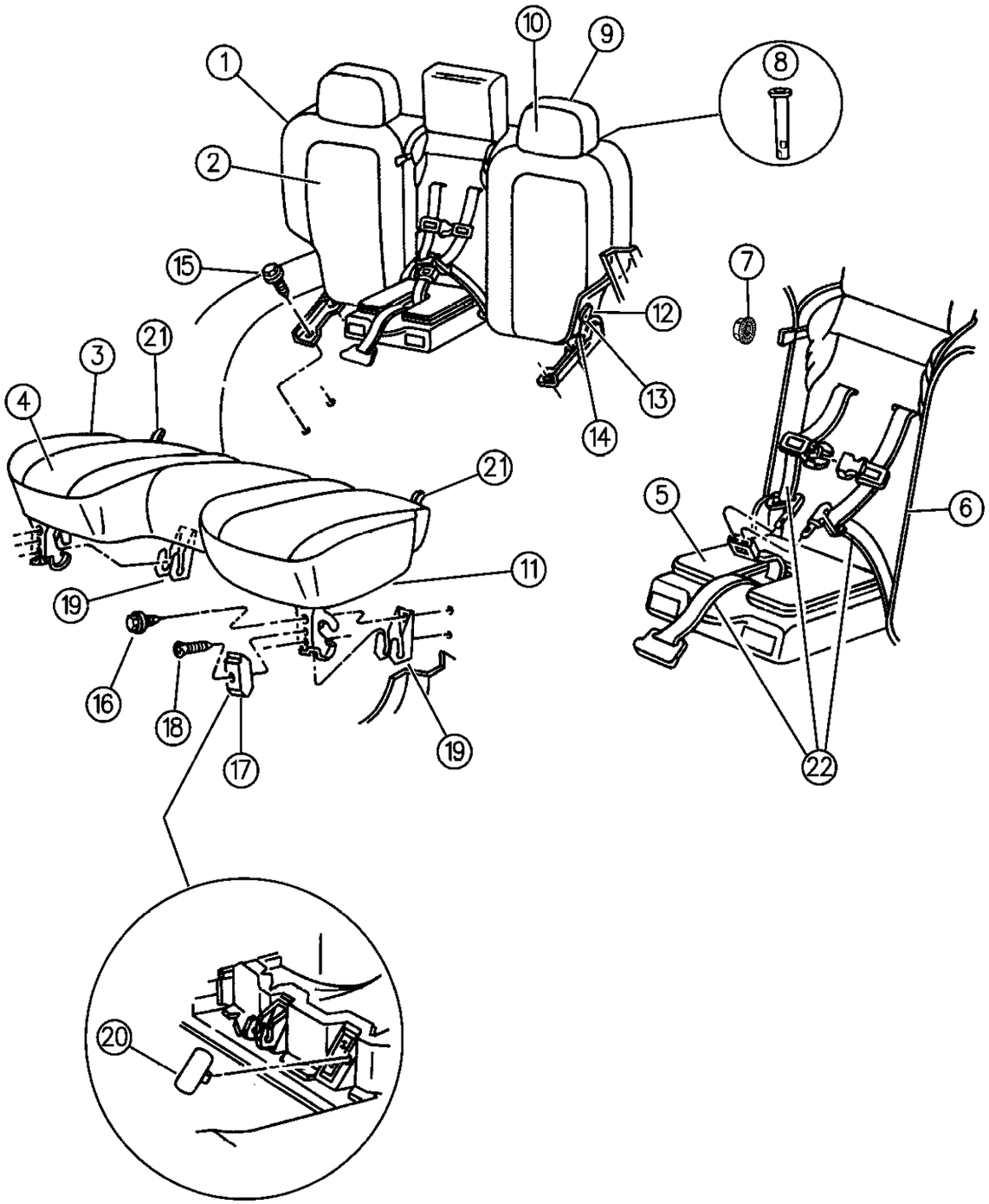

ITEM	PART NUMBER	QTY	BODY	MODEL	DESCRIPTION
	MF25 RD5	1			Quartz, (TLD5)
7	4778 272	4			NUT, Child Seat Mounting
8					CYLINDER, (Service Locking Only)
	4723 834	AR			Seat Back
	4761 521	AR			Rear Cushion, Storage
9					HEADREST
	KJ50 PD5	2			Quartz, (J5D5)
	KJ66 PD5	2			Quartz, (M5D5)
	KJ28 MF8	2			Driftwood, (ALFF)
	KJ29 MF8	2			Driftwood, (BLFF)
	KJ28 MD5	2			Quartz, (TLD5)
					EXPORT
	KJ30 PD5	2			Quartz, (M7D5)
	KP13 PF8	2			Driftwood, (ALFF)
	KP18 PF8	2			Driftwood, (BLFF)
10					COVER, Headrest
	KJ51 PD5	2			Quartz, (J5D5)
	KJ67 PD5	2			Quartz, (M5D5)
	GS50 LF8	2			Driftwood, (ALFF)
	HG77 MF8	1			Driftwood, (BLFF)
	GS50 LD5	2			Quartz, (TLD5)
					EXPORT
	KP21 PD5	2			Quartz, (M7D5)
	KP13 PF8	2			Driftwood, (ALFF)
	KP24 PF8	2			Driftwood, (BLFF)
11	4778 275	1			PANEL, Cushion Base
12	4773 930-1	1			HANDLE, Release Rear Seat Latch
13	4713 800	2			SCREW, Handle Attach
14	4720 586-7	1			COVER, Latch Folding Seat
	4728 280	4			RIVNUT, Latch Cover Attach ***
15	6503 719	AR			SCREW
16	6100 548	AR			SCREW
17	5503 0548	AR			COVER, Rear Seat Cushion Hinge
18	6032 723	AR			SCREW
19	5519 5551	4			HINGE PLATE, Rear Seat Cushion ***
20					COVER, Carpet Anchor Hole
					1995
	5DJ4 9PD5	2			Quartz
	5DJ4 9PF7	2			Brownstone
21					STRAP, Pull Rear Seat Cushion
	HC66 MW8	2			Quartz
	HC66 LF8	2			Driftwood

MODEL CODES:

72=2 DR Wagon
74=4 DR Wagon
77=Open Body 93" Whlbase
78=Open Body 103" Whlbase - Export
T=2WD
J,N=4WD
U=4WD (RHD)

BODY STYLES:

YJ=Wrangler (4X4) "S"
Weangler (4X4) SE
Wrangler (4X4) Sahara
Wrangler (4X4) Renegade
XJ=Cherokee SE
Cherokee Sport
Cherokee Country
ZJ=Grand Cherokee SE
Grand Cherokee Laredo
Grand Cherolee Limited
ZG=Grand Cherokee European
Y1=Wrangler
X1=Cherokee
Z1=Grand Cherokee
KDX=Vehicles

AR = Use as Required - = Non Illustrated Part P.A.R. = Paint as Required

REAR BENCH SEAT WITH CHILD SEAT 1995 GRAND CHEROKEE, ZJ
Figure IZJ-620

IZJ-620A

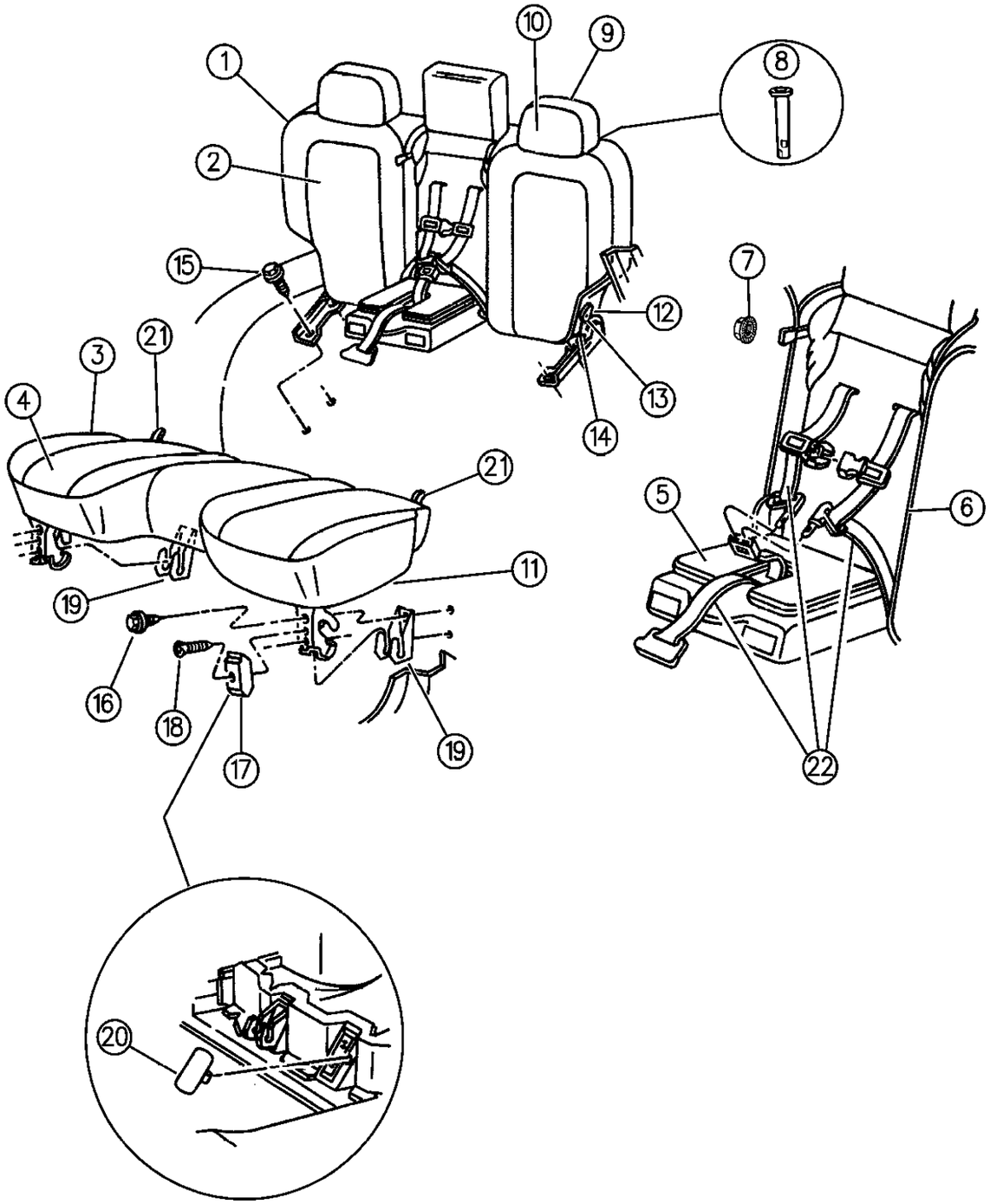

ITEM	PART NUMBER	QTY	BODY	MODEL	DESCRIPTION
22					SEATBELT, Child Seat, (Serviced with Child Seat Module only.) ***

MODEL CODES:

72=2 DR Wagon	77=Open Body 93" Whlbase	T=2WD	U=4WD (RHD)
74=4 DR Wagon	78=Open Body 103" Whlbase - Export	J,N=4WD	

BODY STYLES:

YJ=Wrangler (4X4) "S"	XJ=Cherokee SE	ZJ=Grand Cherokee SE	Y1=Wrangler
Weangler (4X4) SE	Cherokee Sport	Grand Cherokee Laredo	X1=Cherokee
Wrangler (4X4) Sahara	Cherokee Country	Grand Cherolee Limited	Z1=Grand Cherokee
Wrangler (4X4) Renegade		ZG=Grand Cherokee European	KDX=Vehicles

AR = Use as Required - = Non Illustrated Part P.A.R. = Paint as Required

REAR BENCH SEAT WITH CHILD SEAT 1996 GRAND CHEROKEE, ZJ
Figure IZJ-625

IZJ-625

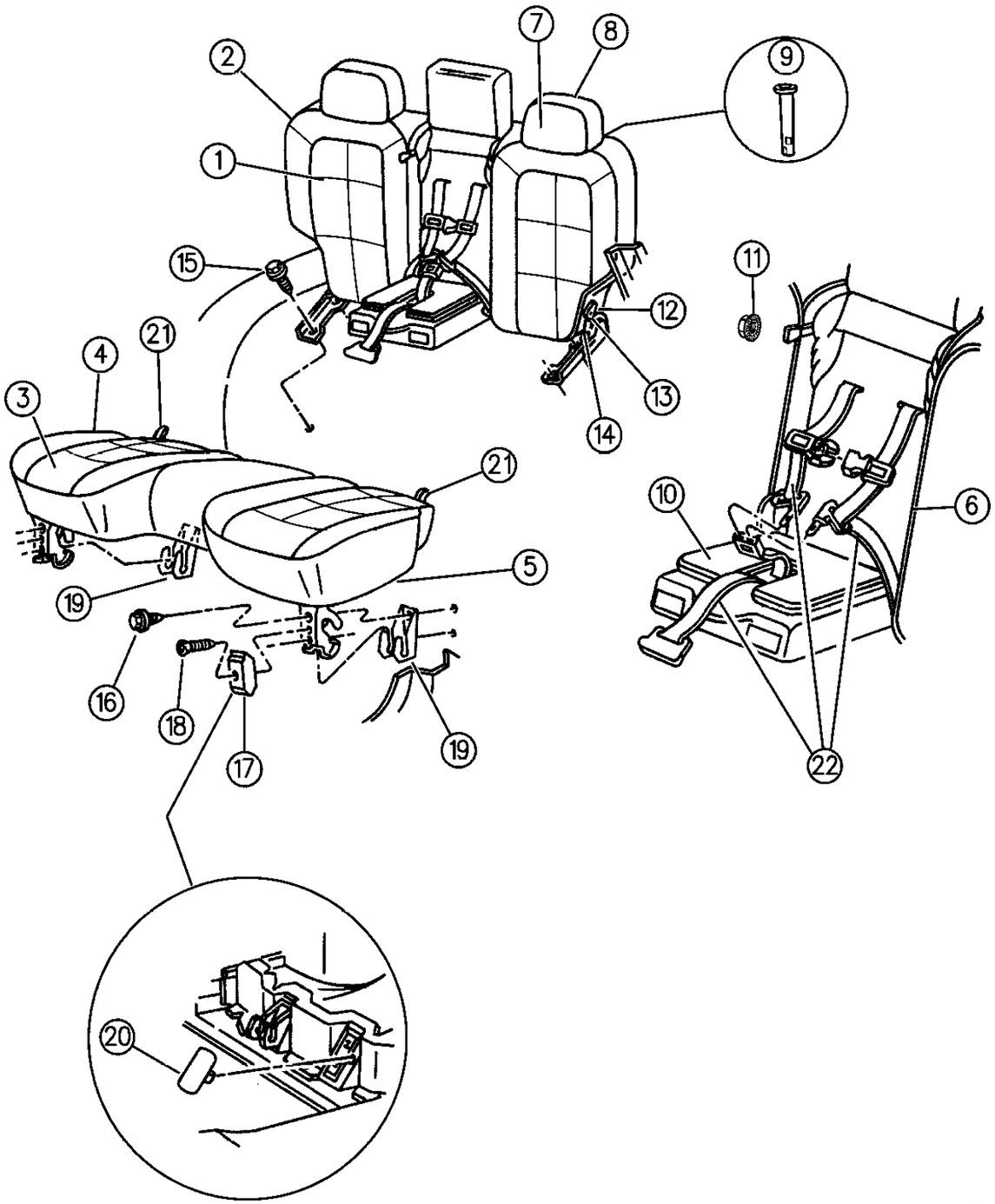

ITEM	PART NUMBER	QTY	BODY	MODEL	DESCRIPTION
1					COVER, Seat Back
					w/CL - Trim Code
	PM52 ST6	1			Saddle
					w/EL - Trim Code
	PM53 SAZ	1			Agate
					w/F5 - Trim Code
	PM55 SAZ	1			Agate
2					BACK ASSEMBLY
					w/CL - Trim Code
	PN20 ST6	1			Saddle
					w/EL - Trim Code
	PN28 SAZ	1			Agate
					w/F5 - Trim Code
	PN29 SAZ	1			Agate
3					COVER, Seat Cushion
					w/CL - Trim Code
	PM57 ST6	1			Saddle
					w/EL - Trim Code
	PM59 SAZ	1			Agate
					w/F5 - Trim Code
	PM66 SAZ	1			Agate
4					CUSHION ASSEMBLY ***
					w/CL - Trim Code
	PN48 ST6	1			Saddle
					w/EL - Trim Code
	PN49 SAZ	1			Agate
					w/F5 - Trim Code
	PN50 SAZ	1			Agate
5	4778 275	1			PANEL, Cushion Base
6					SEAT MODULE, Integrated Child Seat ***
					Domestic
					w/CL - Trim Code
	PN32 ST6	1			Saddle
					w/EL - Trim Code
	PN36 SAZ	1			Agate
					w/F5 - Trim Code
	PN37 SAZ	1			Agate
					EXPORT, ECE
					w/CL - Trim Code
	PN39 ST6	1			Saddle
					w/F5 - Trim Code
	PN38 SAZ	1			Agate

MODEL CODES:

72=2 DR Wagon
74=4 DR Wagon
77=Open Body 93" Whlbase
78=Open Body 103" Whlbase - Export
T=2WD
J,N=4WD
U=4WD (RHD)

BODY STYLES:

YJ=Wrangler (4X4) "S"
Weangler (4X4) SE
Wrangler (4X4) Sahara
Wrangler (4X4) Renegade
XJ=Cherokee SE
Cherokee Sport
Cherokee Country
ZJ=Grand Cherokee SE
Grand Cherokee Laredo
Grand Cherolee Limited
ZG=Grand Cherokee European
Y1=Wrangler
X1=Cherokee
Z1=Grand Cherokee
KDX=Vehicles

AR = Use as Required - = Non Illustrated Part P.A.R. = Paint as Required

REAR BENCH SEAT WITH CHILD SEAT 1996 GRAND CHEROKEE, ZJ
Figure IZJ-625

IZJ-625

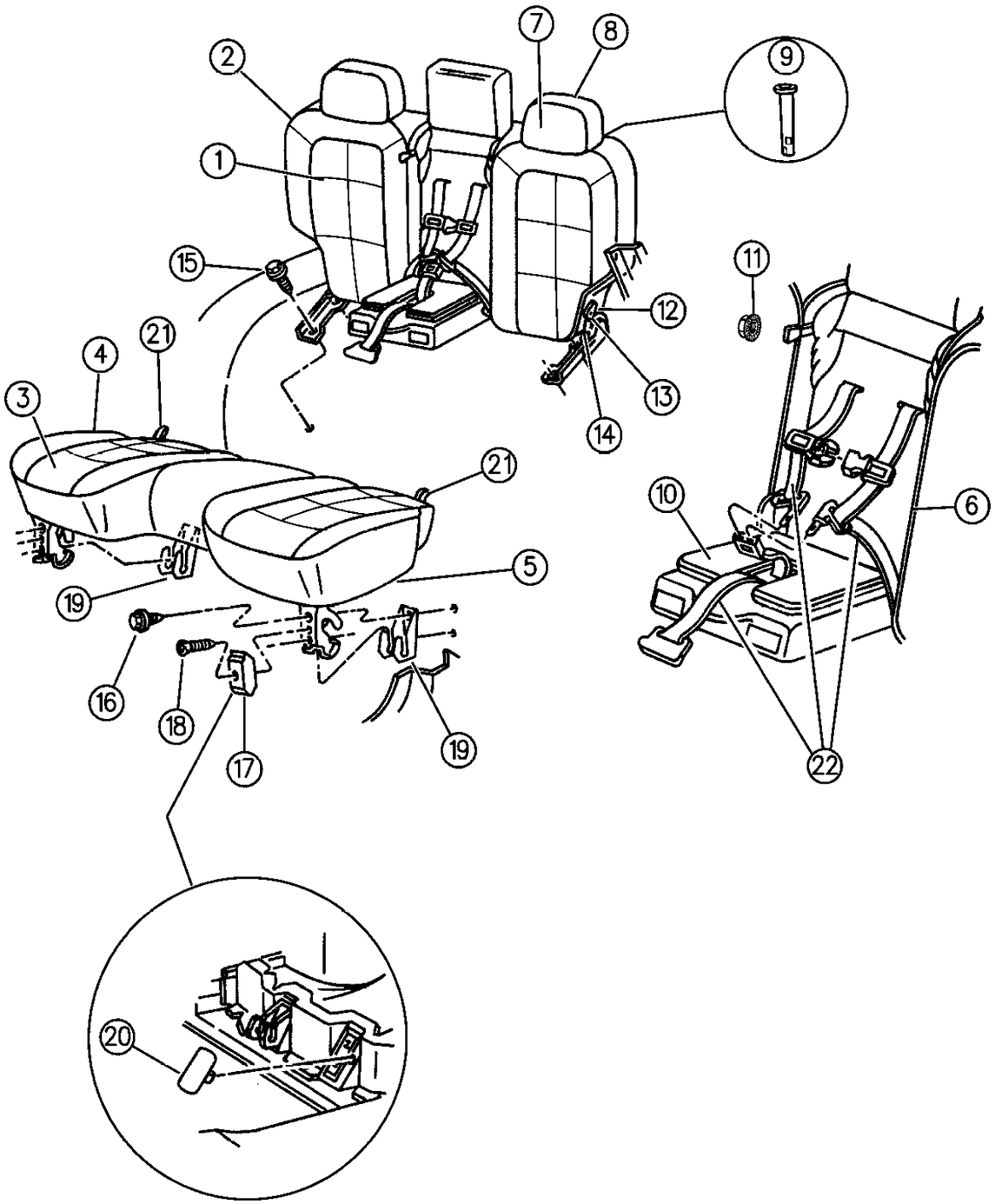

ITEM	PART NUMBER	QTY	BODY	MODEL	DESCRIPTION
7					COVER, Headrest
					w/CL Trim Code
					Domestic
	PM50 SAZ	2			Agate
	PM50 ST6	2			Saddle
					EXPORT, (ECE)
	PM51 SAZ	2			Agate
	PM51 ST6	2			Saddle
8					HEADREST ASSY. ***
					w/CL Trim Code
					Domestic
	PM90 SAZ	2			Agate
	PM90 ST6	2			Saddle
					EXPORT, (ECE)
	PN16 SAZ	2			Agate
	PN16 ST6	2			Saddle
The following headrests are "Pour-in-Place', therefore no covers are serviced. e Adhesive #312.					
					w/EL - Trim Code
	PN14 SAZ	2			Agate
					w/F5 - Trim Code
					Domestic
	PN15 SAZ	2			Agate
	PN15 SC3	2			Mist Gray
	PN15 ST6	2			Saddle
					EXPORT, (ECE)
	PN17 SAZ	2			Agate
	PN17 SC3	2			Mist Gray
	PN17 ST6	2			Saddle
9	4723 834	AR			CYLINDER, Headrest w/Latch
10					PAD, Child Seat
	QK53 SAZ	1			Agate
	QK53 ST6	1			Saddle
11	4778 272	4			NUT, Child Seat Mounting
12	4773 930-1	1			HANDLE, Release Rear Seat Latch
13	4713 800	2			SCREW, Handle Attach
14	4720 586-7	1			COVER, Latch Folding Seat
15	6503 719	AR			SCREW
16	6100 548	AR			SCREW
17	5503 0548	AR			COVER, Rear Seat Cushion Hinge
18	6032 723	AR			SCREW
19	5519 5551	4			HINGE PLATE, Rear Seat Cushion ***
20					COVER, Carpet Anchor Hole

MODEL CODES:

72=2 DR Wagon
74=4 DR Wagon
77=Open Body 93" Whlbase
78=Open Body 103" Whlbase - Export
T=2WD
J,N=4WD
U=4WD (RHD)

BODY STYLES:

YJ=Wrangler (4X4) "S"
Weangler (4X4) SE
Wrangler (4X4) Sahara
Wrangler (4X4) Renegade
XJ=Cherokee SE
Cherokee Sport
Cherokee Country
ZJ=Grand Cherokee SE
Grand Cherokee Laredo
Grand Cherolee Limited
ZG=Grand Cherokee European
Y1=Wrangler
X1=Cherokee
Z1=Grand Cherokee
KDX=Vehicles

AR = Use as Required - = Non Illustrated Part P.A.R. = Paint as Required

REAR BENCH SEAT WITH CHILD SEAT 1996 GRAND CHEROKEE, ZJ
Figure IZJ-625

IZJ-625

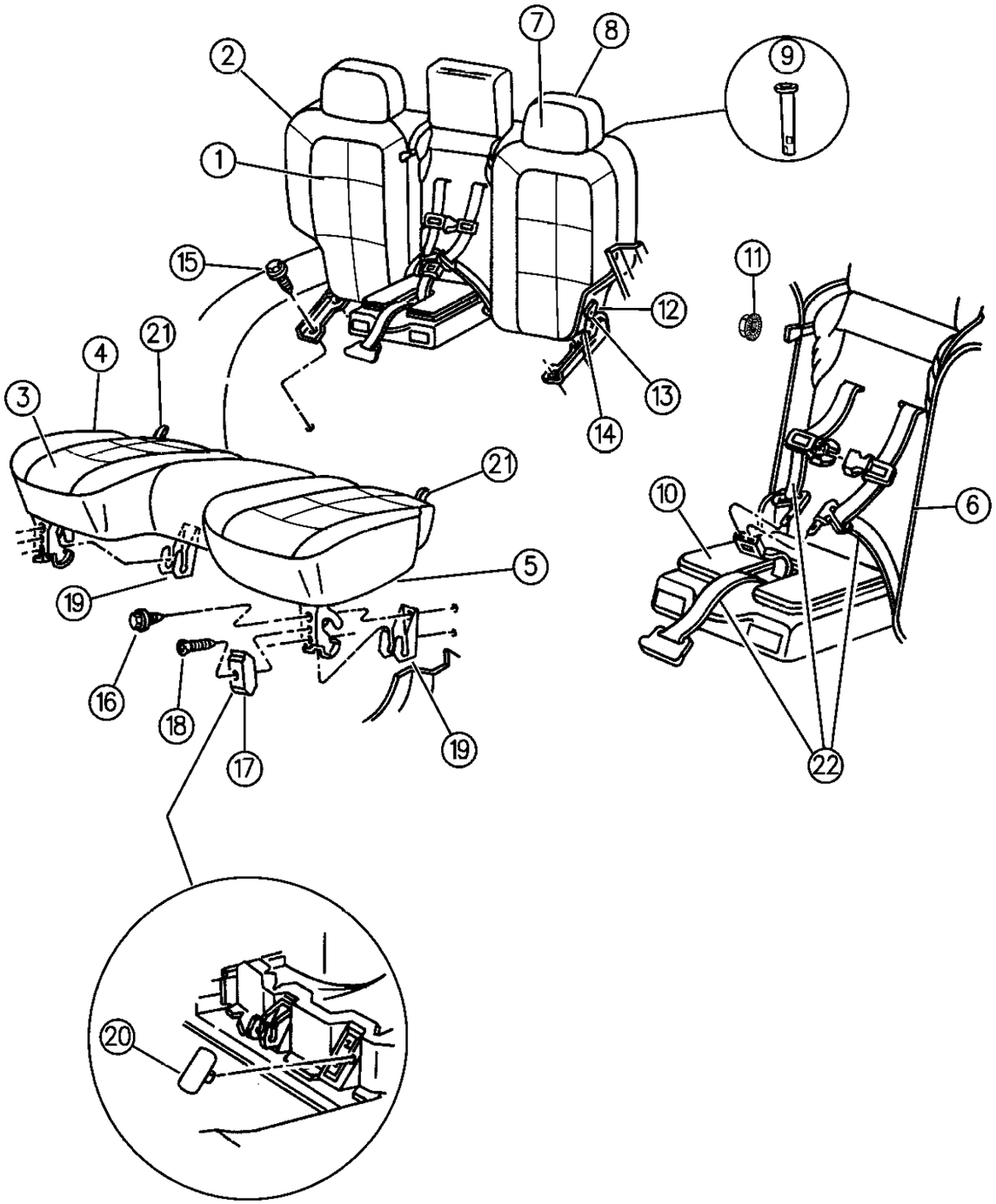

ITEM	PART NUMBER	QTY	BODY	MODEL	DESCRIPTION
	5DJ4 9SAZ	2			Agate
	5DJ4 9ST6	2			Spice ***
21					STRAP, Pull Rear Seat Cushion
	HC66 SAZ	2			Agate
	HC66 ST6	2			Saddle
22					SEATBELT, Child Seat, (Serviced with child seat module only) ***
	4728 952AB	1			TETHER PACKAGE, Child Seat ***

MODEL CODES:

72=2 DR Wagon
74=4 DR Wagon
77=Open Body 93" Whlbase
78=Open Body 103" Whlbase - Export
T=2WD
J,N=4WD
U=4WD (RHD)

BODY STYLES:

YJ=Wrangler (4X4) "S"
Weangler (4X4) SE
Wrangler (4X4) Sahara
Wrangler (4X4) Renegade
XJ=Cherokee SE
Cherokee Sport
Cherokee Country
ZJ=Grand Cherokee SE
Grand Cherokee Laredo
Grand Cherolee Limited
ZG=Grand Cherokee European
Y1=Wrangler
X1=Cherokee
Z1=Grand Cherokee
KDX=Vehicles

AR = Use as Required - = Non Illustrated Part P.A.R. = Paint as Required

SEAT BELTS - FRONT SEAT - GRAND CHEROKEE AND GRAND WAGONEER - ZJ
Figure IZJ-710

IZJ-710D

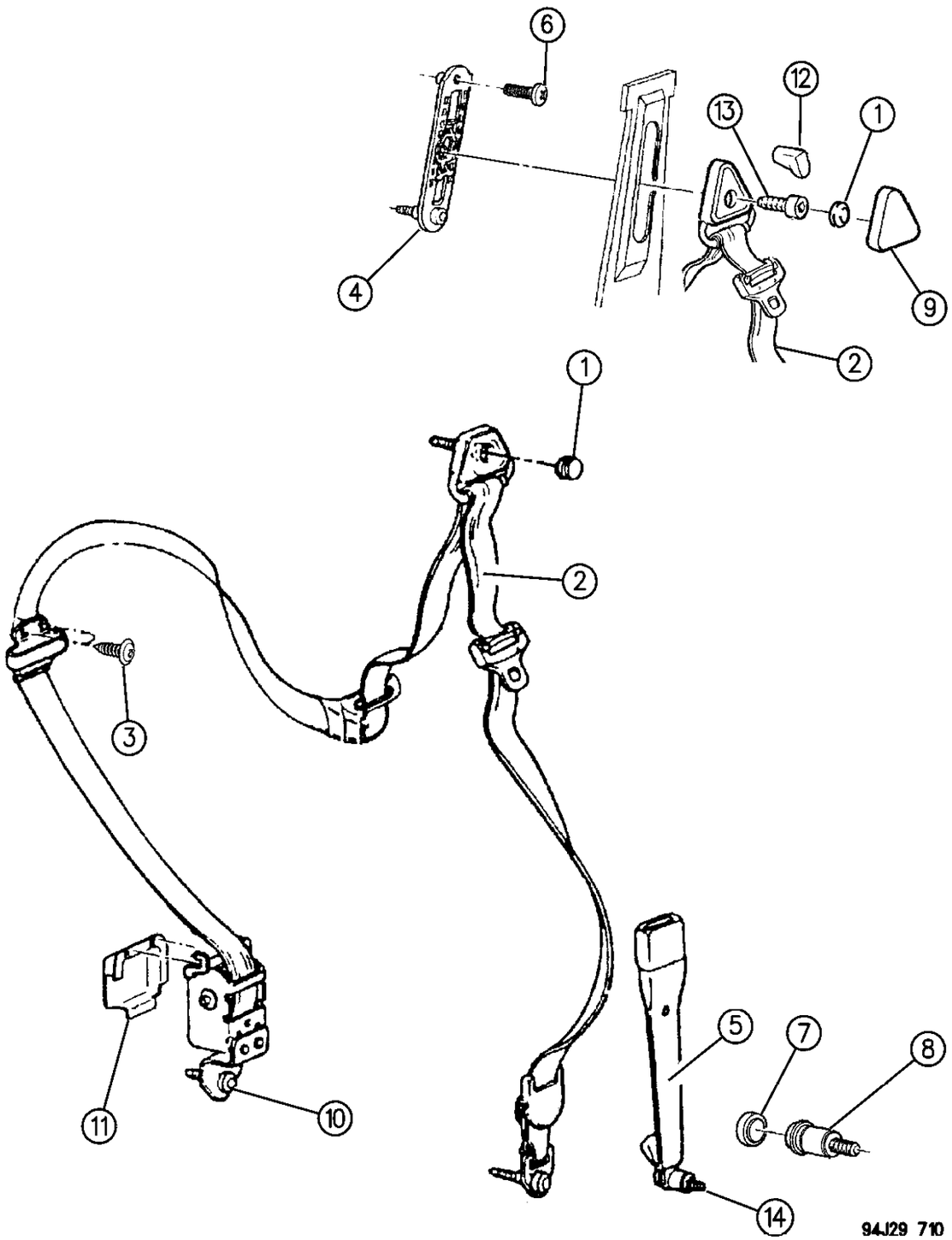

ITEM	PART NUMBER	QTY	BODY	MODEL	DESCRIPTION
1					CAP, Guide Cover, 1994
					w/o Export Equipment Package
	5AB9 6LD5	2			Quartz
	5AB9 6LF8	2			Driftwood
	5AB9 6MV4	2			Champagne
2					SEAT BELT, Retractor and Belt Assembly (includes mounting bolts) ***
					1994, Label 55314754-5
	5DP28-9 MD5	1			Quartz
	5DP28-9 MF8	1			Driftwood
	5DP28-9 MV4	1			Champagne
					1995, Label 55314842-3
	5EB52-3 RAZ	1			Agate
	5EB52-3 RF6	1			Driftwood
	5EB52-3 RV3	1			Champagne
					1995, Label 55196114-5
	5EP78-9 RAZ	1			Agate
	5EP78-9 RF6	1			Driftwood
	5EP78-9 RV4	1			Champagne
					1996, Label 55196466-7
	5FG04-5 SAZ	1			Agate
	5FG04-5 ST6	1			Saddle
					LABEL 55027478 (EUROPE)
					w/Export Equipment Package, Black, EUROPE
	5531 4814-5	1			1994,95
	5519 6110-1	1			1996
3					SCREW, Seat Belt to "B" Pillar
	0154 114	4			1994, .164-18x.500
	6032 723	4			1995,96 .164-15x.750
4					ADJUSTER, Turning Loop Height
	5531 4697	2			1994,95, EUROPE
	4645 807	2			1996, (Domestic & Europe)
5					SEAT BELT, Buckle Assembly Inner (includes bolt) ***
					1994, LABEL 55030474-5
	5AU02-3 LD5	1			Medium Quartz
	5AU02-3 LF8	1			Dark Driftwood
	5AU02-3 MV4	1			Light Champagne
					1995, Label 55314844-5
	5EB56-7 RAZ	1			Agate
	5EB56-7 RF6	1			Driftwood
	5EB56-7 RV4	1			Champagne
					1996, Label 55314924-5

MODEL CODES:

72=2 DR Wagon
74=4 DR Wagon
77=Open Body 93" Whlbase
78=Open Body 103" Whlbase - Export
T=2WD
J,N=4WD
U=4WD (RHD)

BODY STYLES:

YJ=Wrangler (4X4) "S"
Weangler (4X4) SE
Wrangler (4X4) Sahara
Wrangler (4X4) Renegade
XJ=Cherokee SE
Cherokee Sport
Cherokee Country
ZJ=Grand Cherokee SE
Grand Cherokee Laredo
Grand Cherolee Limited
ZG=Grand Cherokee European
Y1=Wrangler
X1=Cherokee
Z1=Grand Cherokee
KDX=Vehicles

AR = Use as Required - = Non Illustrated Part P.A.R. = Paint as Required

SEAT BELTS - FRONT SEAT - GRAND CHEROKEE AND GRAND WAGONEER - ZJ
Figure IZJ-710

IZJ-710D

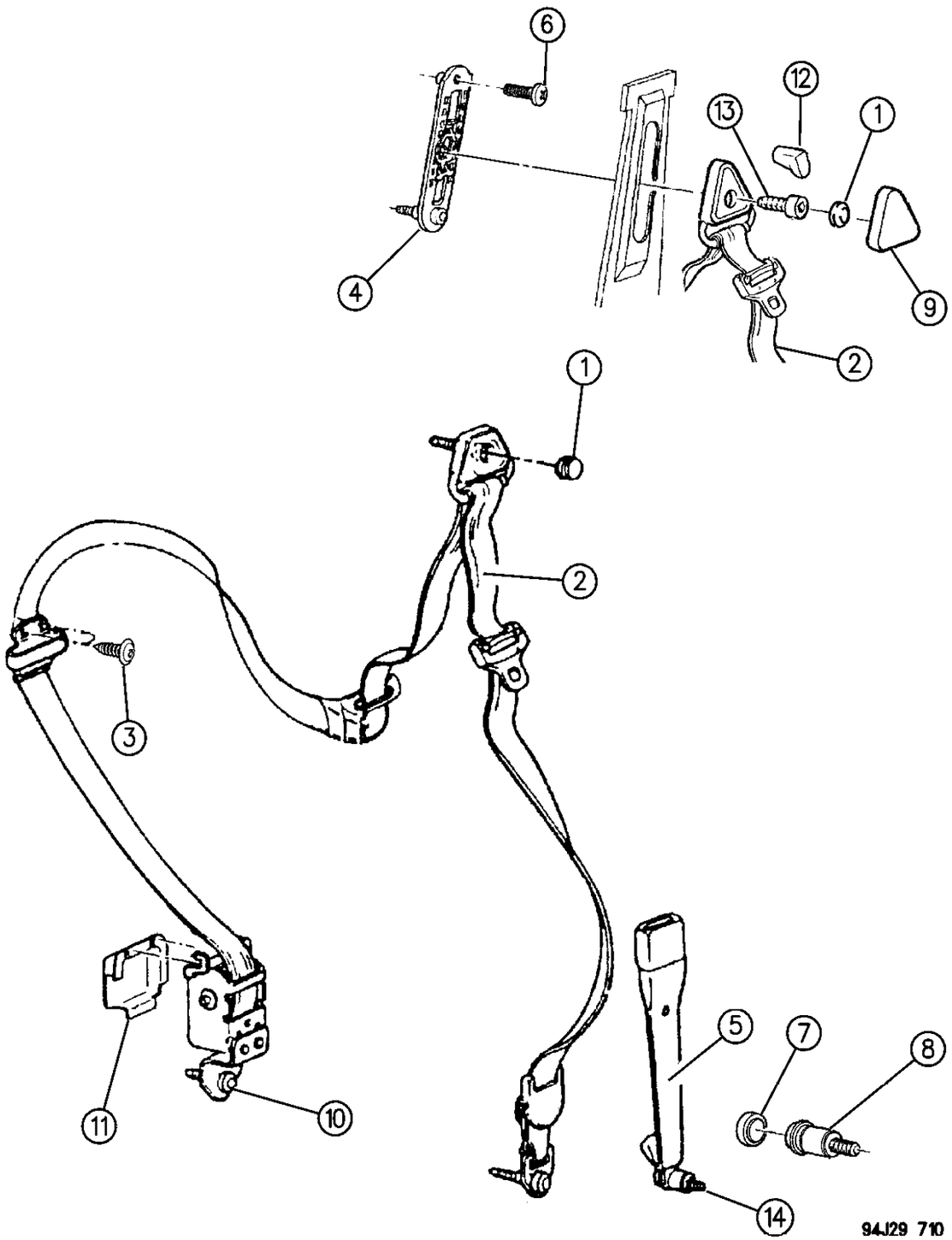

ITEM	PART NUMBER	QTY	BODY	MODEL	DESCRIPTION
					Right
	5EP2 0SAZ	1			Agate
	5EP2 0ST6	1			Saddle
					Left, w/Sensor Switch
	5EP2 1SAZ	1			Agate
	5EP2 1ST6	1			Saddle
					1996, Label 55196591
					Left, Sensor Switch Moved to Retractor Assy.
	5FP5 71AZ	1			Agate
	5FP5 71T6	1			Saddle
					LABEL 55027480-1, EUROPE, (Bolts to The Seat)
					Passenger Seat, Black, EUROPE
	5BE8 8MX9	1			1994
	5531 4894	1			1995,96
	5519 6074	1		ZG	1996, R.H.D.
					Driver Seat Inner, Black, EUROPE
	5BE8 9MX9	1			1994
	5531 4895	1			1995
	5519 6075	1			1996
-					BOLT, Buckle Attaching
	6033 999	2			1994
	6035 115	2			1995
6	6034 384	2			BOLT, w/Export Equipment Package, EUROPE
7	J400 7263	2			CAP, w/Export Equipment
8					PLUG, Floor Pan Carpet (w/Export Equipment), Not Serviced
9					COVER, Turning Loop
	F877 JX9	2			1994, EUROPE
					1995
	F877 JX9	2			Black
	F877 JD5	2			Quartz
	F877 RF8	2			Driftwood
	F877 JV4	2			Champagne
					1996, Serviced in Item #2
-	6502 985	2			SCREW, Adjuster to "B" pillar, EUROPE
10	6034 383	AR			SCREW, .437-20x1.50
11	5531 4564-5	1			SHIELD, Front Seat Retractor
12	4645 780	1			BUTTON, Seat Belt Adjuster, 1996
13	6035 763	2			SCREW, Turn Loop Attach, 1996, .437-20x1.23
14	4874 129	2			BOLT, Buckle Attach, 1996
NOTE: (S/C-ABE) = Export Equipment Package (optional for Europe Market) e Adhesive #312.					
-					EXTENDER, Seat Belt
	5260 606	2			1994,95

MODEL CODES:

72=2 DR Wagon
74=4 DR Wagon
77=Open Body 93" Whlbase
78=Open Body 103" Whlbase - Export
T=2WD
J,N=4WD
U=4WD (RHD)

BODY STYLES:

YJ=Wrangler (4X4) "S"
Weangler (4X4) SE
Wrangler (4X4) Sahara
Wrangler (4X4) Renegade
XJ=Cherokee SE
Cherokee Sport
Cherokee Country
ZJ=Grand Cherokee SE
Grand Cherokee Laredo
Grand Cherolee Limited
ZG=Grand Cherokee European
Y1=Wrangler
X1=Cherokee
Z1=Grand Cherokee
KDX=Vehicles

AR = Use as Required - = Non Illustrated Part P.A.R. = Paint as Required

SEAT BELTS - FRONT SEAT - GRAND CHEROKEE AND GRAND WAGONEER - ZJ
Figure IZJ-710

IZJ-710D

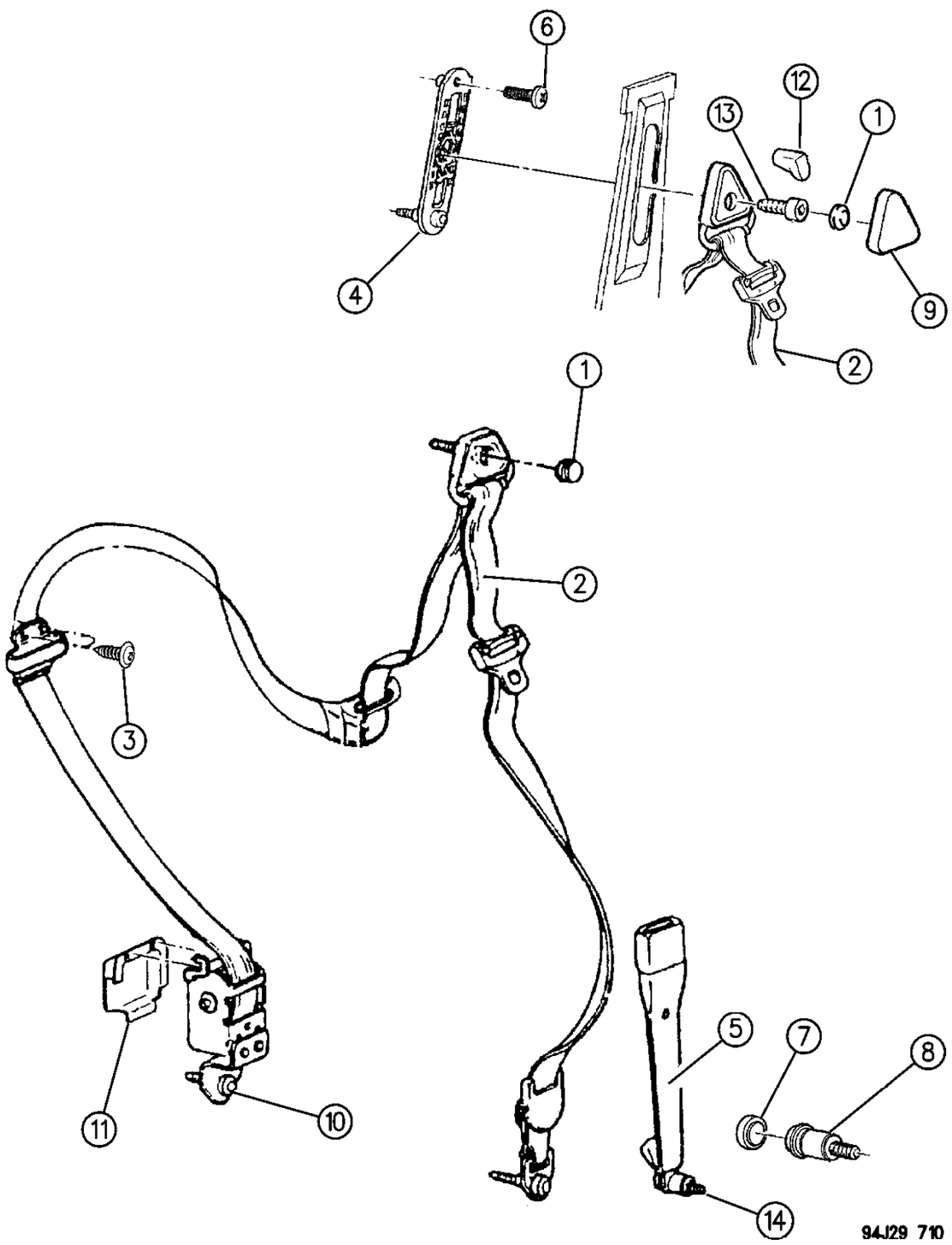

ITEM	PART NUMBER	QTY	BODY	MODEL	DESCRIPTION
	4740 415	1			1996

MODEL CODES:

72=2 DR Wagon	77=Open Body 93" Whlbase	T=2WD	U=4WD (RHD)
74=4 DR Wagon	78=Open Body 103" Whlbase - Export	J,N=4WD	

BODY STYLES:

YJ=Wrangler (4X4) "S"	XJ=Cherokee SE	ZJ=Grand Cherokee SE	Y1=Wrangler
Weangler (4X4) SE	Cherokee Sport	Grand Cherokee Laredo	X1=Cherokee
Wrangler (4X4) Sahara	Cherokee Country	Grand Cherolee Limited	Z1=Grand Cherokee
Wrangler (4X4) Renegade		ZG=Grand Cherokee European	KDX=Vehicles

AR = Use as Required - = Non Illustrated Part P.A.R. = Paint as Required

SEAT BELTS - REAR SEAT - GRAND CHEROKEE AND GRAND WAGONEER - ZJ
Figure IZJ-720

IZJ-720B

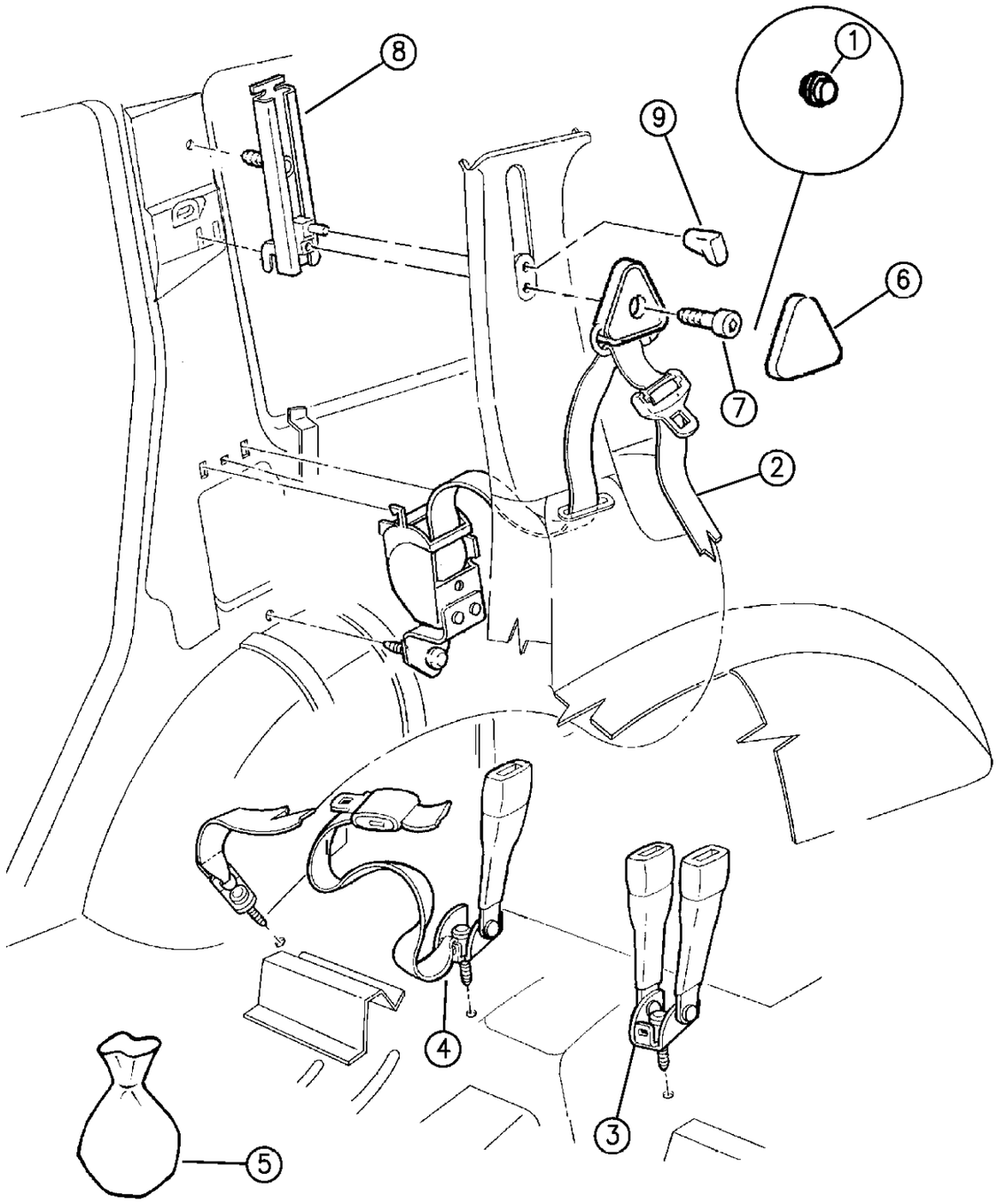

ITEM	PART NUMBER	QTY	BODY	MODEL	DESCRIPTION
1					CAP, Guide Cover, 1994
	5AB9 6LD5	2			Quartz
	5AB9 6LF8	2			Driftwood
	5AB9 6MV4	2			Champagne
2					SEAT BELT, Retractor and Belt Assembly (includes mounting bolts) ***
					1994, LABEL 55314758-9
	5DP32-3 MD5	1			Quartz
	5DP32-3 MF8	1			Driftwood
	5DP32-3 MV4	1			Champagne
					1995, LABEL 55314846-7, 55314912-3, 55196116-7
	5EB58-9 RAZ	1			Agate
	5EB58-9 RF6	1			Driftwood
	5EB58-9 RV4	1			Champagne
					1996, Label 55196226-7
	5EW68-9 SAZ	1			Agate
	5EW68-9 ST6	1			Saddle
					w/Export Equipment Package & EUROPE
	5DP30-1 MX9	1			1994,95
	5519 6112-3	1			1996
3					SEAT BELT, Buckle Assembly (includes 2 buckle assembly w/ mounting bolt) ***
					1994, LABEL 55314725
	5DN4 3PD5	1			Quartz
	5DN4 3PF8	1			Driftwood
	5DN4 3PV4	1			Champagne
					1995, LABEL 55314849
	5EB6 1RAZ	1			Agate
	5EB6 1RF6	1			Driftwood
	5EB6 1RV4	1			Champagne
					1996, LABEL 55314849
	5EB6 1RAZ	1			Agate
	5EB6 1ST6	1			Saddle
					Black, w/Export Equipment Package, EUROPE
	5DN3 7PX9	1			1994, Label 55314723
	5531 4897	1			1995,96, Label 55314897
4					SEAT BELT, Lap Belt (tip and buckle assembly w/mounting bolt) ***
					1994, LABEL 55314724
	5DN4 2PD5	1			Quartz
	5DN4 2PF8	1			Driftwood
	5DN4 2PV4	1			Champagne
					1995, LABEL 55314848

MODEL CODES:

72=2 DR Wagon
74=4 DR Wagon
77=Open Body 93" Whlbase
78=Open Body 103" Whlbase - Export
T=2WD
J,N=4WD
U=4WD (RHD)

BODY STYLES:

YJ=Wrangler (4X4) "S"
Weangler (4X4) SE
Wrangler (4X4) Sahara
Wrangler (4X4) Renegade
XJ=Cherokee SE
Cherokee Sport
Cherokee Country
ZJ=Grand Cherokee SE
Grand Cherokee Laredo
Grand Cherolee Limited
ZG=Grand Cherokee European
Y1=Wrangler
X1=Cherokee
Z1=Grand Cherokee
KDX=Vehicles

AR = Use as Required - = Non Illustrated Part P.A.R. = Paint as Required

SEAT BELTS - REAR SEAT - GRAND CHEROKEE AND GRAND WAGONEER - ZJ
Figure IZJ-720

IZJ-720B

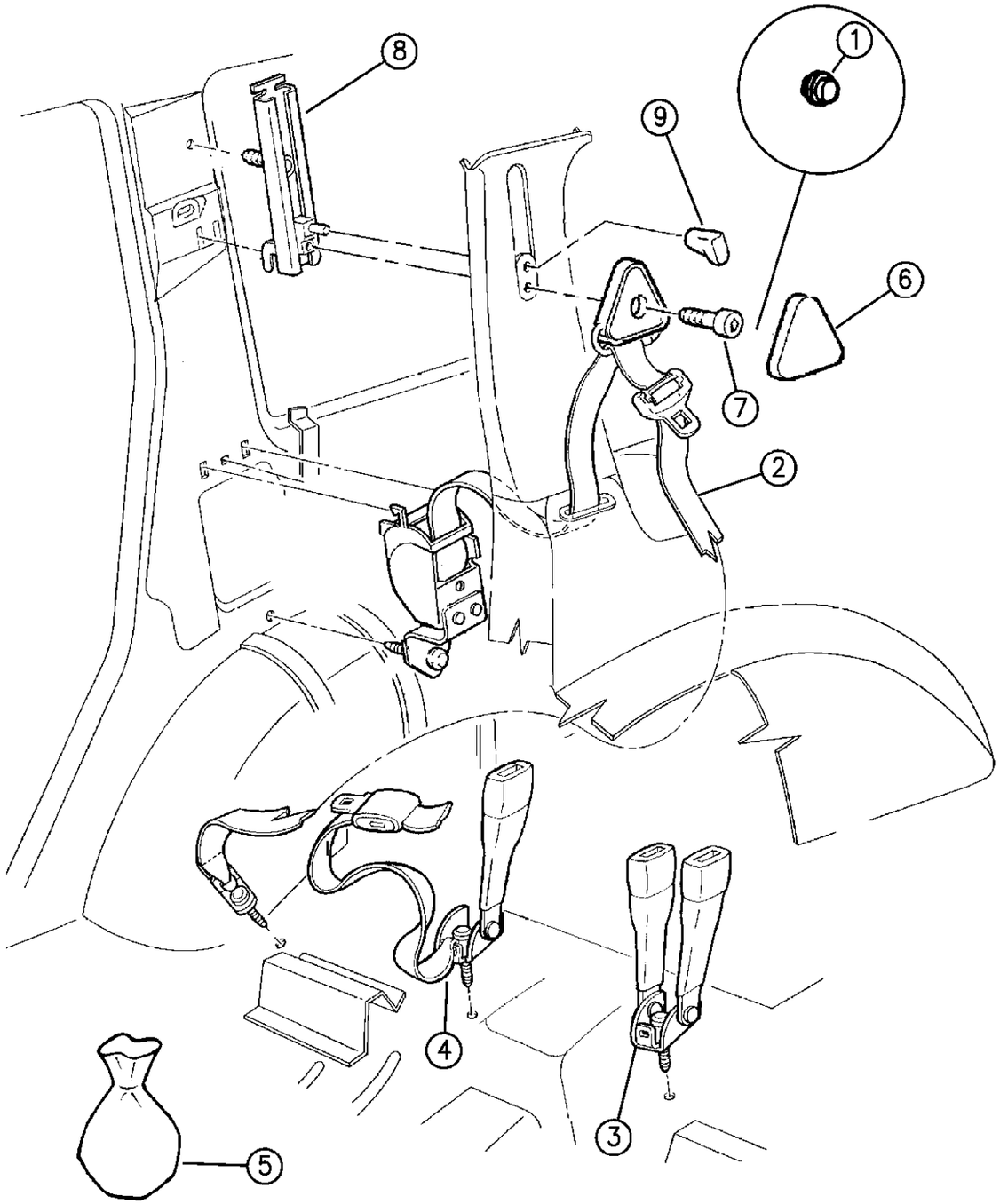

ITEM	PART NUMBER	QTY	BODY	MODEL	DESCRIPTION
	5EB6 0RAZ	1			Agate
	5EB6 0RF6	1			Driftwood
	5EB6 0RV4	1			Champagne
					1996, LABEL 55314848
	5EB6 0RAZ	1			Agate
	5EB6 0ST6	1			Saddle
					Black, w/Export Equipment Package, EUROPE
	5DN3 6PX9	1			1994, Label 55314722
	5531 4896	1			1995,96, Label 55314896
5	4728 952	1			ANCHOR PKG. Tether Child Seat ***
6					COVER, Turning Loop
					1994
	F877 JX9	2			Black
					1995
	F877 JD5	2			Quartz
	F877 JX9	2			Black
	F877 JV4	2			Champagne
	F877 RF8	2			Driftwood
					1996, Serviced in Item #2
7	4664 039	2			SCREW, 1996
8	4645 807	2			ADJUSTER, 1996
9	4645 780	2			BUTTON, Seat Belt Adjuster

MODEL CODES:

72=2 DR Wagon	77=Open Body 93" Whlbase	T=2WD	U=4WD (RHD)
74=4 DR Wagon	78=Open Body 103" Whlbase - Export	J,N=4WD	

BODY STYLES:

YJ=Wrangler (4X4) "S"	XJ=Cherokee SE	ZJ=Grand Cherokee SE	Y1=Wrangler
Weangler (4X4) SE	Cherokee Sport	Grand Cherokee Laredo	X1=Cherokee
Wrangler (4X4) Sahara	Cherokee Country	Grand Cherolee Limited	Z1=Grand Cherokee
Wrangler (4X4) Renegade		ZG=Grand Cherokee European	KDX=Vehicles

AR = Use as Required - = Non Illustrated Part P.A.R. = Paint as Required

RECLINER AND SEAT TRACK - FRONT SEAT - 1994-95 GRAND CHEROKEE AND GRAND WAGONEER - ZJ
Figure IZJ-810

IZJ-810

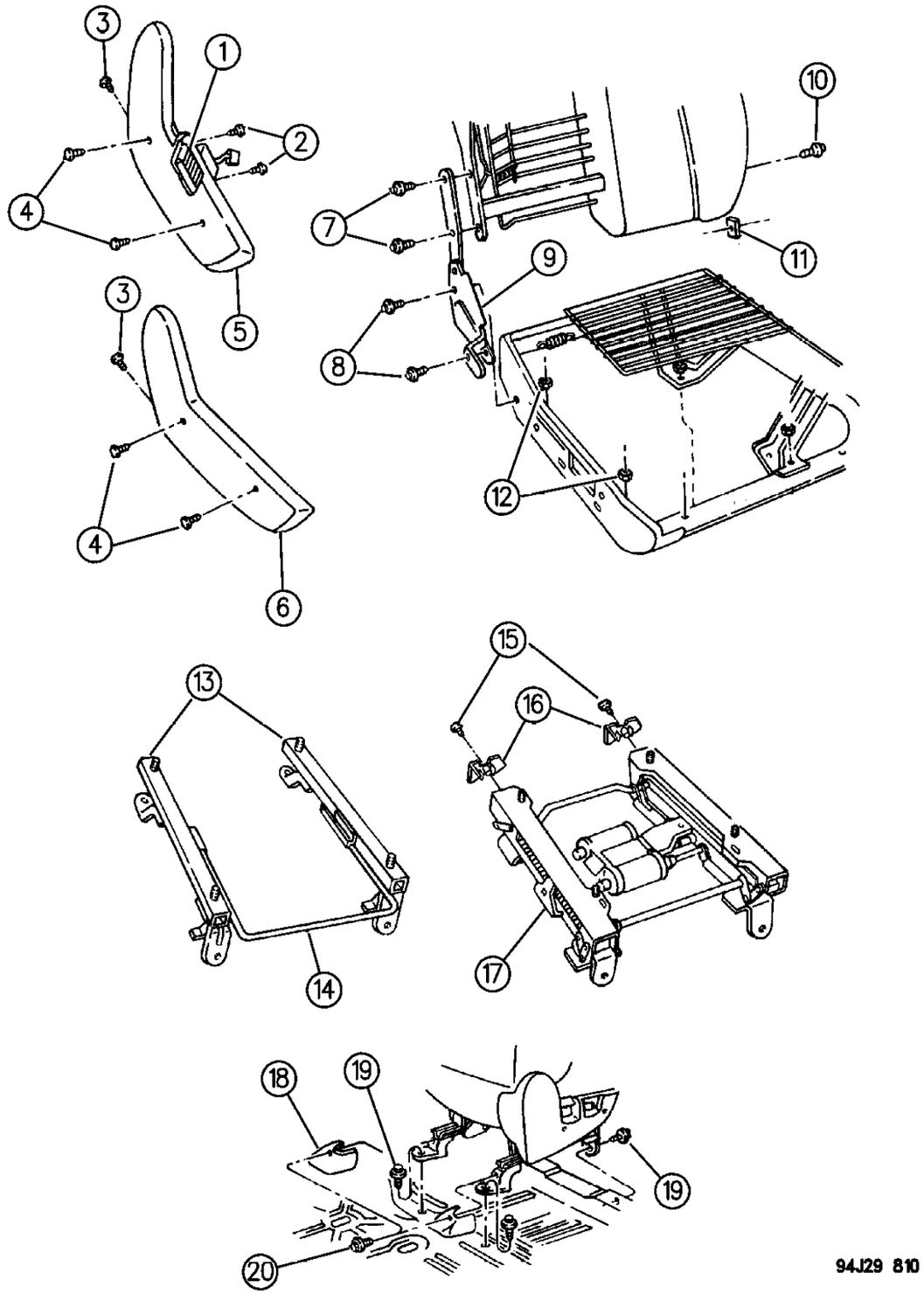

ITEM	PART NUMBER	QTY	BODY	MODEL	DESCRIPTION
1	4373 666	2			SWITCH ASSEMBLY, Power Seat (Includes The Knobs, Which Are Not Serviced Separately) ***
-	5600 5772-3	1			HARNESS, Seat Switch to Seat Motor ***
2		4			SCREW, Seat Switch Mounting, Not Serv. (10-16x.62)
3	4720 769	2			SCREW, Side Shield Attaching
4	4720 770	4			SCREW, Side Shield Attaching
5					SHIELD, Side (Does Not Include Switch, See Item 1)
					1994-95, Up to 11-22-94
	GS02-3 MW8	1			Quartz (used w/trim code BLDW)
	GS02-3 LD5	1			Quartz
	GS02-3 LF8	1			Driftwood
	GS02-3 MV4	1			Champagne
					1995, After 11-22-94
	PJ64-5 RW8	1			Quartz
	PJ64-5 RF8	1			Driftwood
	PJ64-5 RV4	1			Champagne
6					SHIELD, Side (Used w/Manual Seat Adjusters)
					1994-95, Up to 11-22-94
	GS00-1 LD5	1			Quartz
	GS00-1 LF8	1			Driftwood
	GS00-1 PV4	1			Champagne
					1995, After 11-22-94
	PJ62-3 RD5	1			Quartz
	PJ62-3 RF8	1			Driftwood
	PJ62-3 RV4	1			Champagne
7	4720 768	4			BOLT, Recliner to Seatback
8	4713 968	4			BOLT, Recliner to Cushion Frame
9					Recliner Assembly, Front Seat Back ***
	4713 964-5	1			1994
	4796 798-9	1			1995
10					BOLT, Pivot
	4713 980	1			1994
	4797 554	1			1995
11	4713 982	2			U-NUT, Front Seat Back Frame
12	4720 766	8			NUT, Adjuster to Seat Cushion Frame
NOTE: The seat frames and pads are only serviced as covered assemblies, see illustration 510. e Adhesive #312.					
13					ADJUSTER, Manual Seat Track (order by description)
					Use w/o Export Equipment Package
	4720 763	1			Passenger Seat, Outboard
	4720 764	2			Passenger Seat Inboard and Driver Seat Outboard
	4720 765	1			Driver Seat Inboard
					Use w/Export Equipment Package

MODEL CODES:

72=2 DR Wagon
74=4 DR Wagon
77=Open Body 93" Whlbase
78=Open Body 103" Whlbase - Export
T=2WD
J,N=4WD
U=4WD (RHD)

BODY STYLES:

YJ=Wrangler (4X4) "S"
Weangler (4X4) SE
Wrangler (4X4) Sahara
Wrangler (4X4) Renegade
XJ=Cherokee SE
Cherokee Sport
Cherokee Country
ZJ=Grand Cherokee SE
Grand Cherokee Laredo
Grand Cherolee Limited
ZG=Grand Cherokee European
Y1=Wrangler
X1=Cherokee
Z1=Grand Cherokee
KDX=Vehicles

AR = Use as Required - = Non Illustrated Part P.A.R. = Paint as Required

RECLINER AND SEAT TRACK - FRONT SEAT - 1994-95 GRAND CHEROKEE AND GRAND WAGONEER - ZJ
Figure IZJ-810

IZJ-810

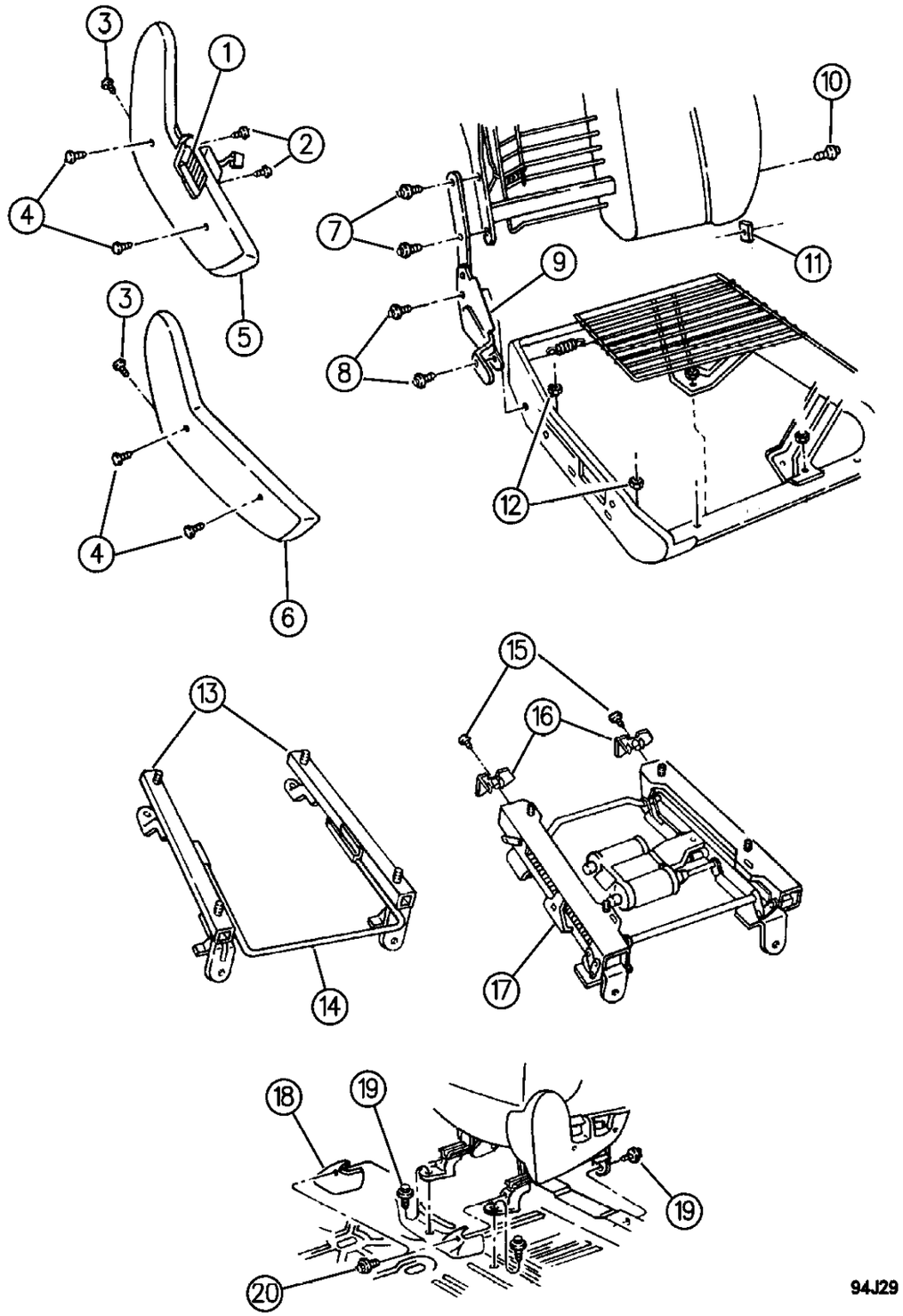

ITEM	PART NUMBER	QTY	BODY	MODEL	DESCRIPTION
	4723 859	1			Passenger Seat, Outboard
	4723 862	1			Passenger Seat, Inboard
	4723 858	1			Driver Seat, Outboard
	4723 861	1			Driver Seat, Inboard
14	4713 930	2			HANDLE, Front Seat Adjuster
15					SCREW, Not Serv. (8-18X.62)
16					SHIELD, Rear of Power Adjuster
					Right side of driver or passenger seat
	4720 771	2			w/o Export Equipment Package
					Left side of driver or passenger seat
	4720 772	2			w/o Export Equipment Package
					w/Export Equipment Package
	4723 888	1			Shield, (Pass. Seat O.B. - Drivers Seat I.B.)
	4723 889	1			Shield, (Pass. Seat I.B. - Drivers Seat O.B.)
17		1			ADJUSTER, Power Seat Track (includes the motor which is not serviced separately)
	4713 924-5				w/o Export Equipment Package
	4723 864-5				w/Export Equipment Package
18					COVER, Power Seat Track
					1994
	5CC1 6LD5	4			Quartz
	5CC1 6LF8	4			Driftwood
	5CC1 6MV4	4			Champagne
					1995
	5CC1 6LD5	4			Quartz
19	6501 093	8			SCREW, Seat Adjuster to Floor
20		4			SCREW, Cover to Power Seat Adjuster, (Not Serv) 8-18x.375

NOTE: (S/C-ABE) = Export Equipment Package (optional for Europe market). e Adhesive #312.

MODEL CODES:

72=2 DR Wagon
74=4 DR Wagon
77=Open Body 93" Whlbase
78=Open Body 103" Whlbase - Export
T=2WD
J,N=4WD
U=4WD (RHD)

BODY STYLES:

YJ=Wrangler (4X4) "S"
Weangler (4X4) SE
Wrangler (4X4) Sahara
Wrangler (4X4) Renegade
XJ=Cherokee SE
Cherokee Sport
Cherokee Country
ZJ=Grand Cherokee SE
Grand Cherokee Laredo
Grand Cherolee Limited
ZG=Grand Cherokee European
Y1=Wrangler
X1=Cherokee
Z1=Grand Cherokee
KDX=Vehicles

AR = Use as Required - = Non Illustrated Part P.A.R. = Paint as Required

RECLINER AND SEAT TRACK FRONT SEAT GRAND CHEROKEE, ZJ, 1996
Figure IZJ-820

IZJ-820

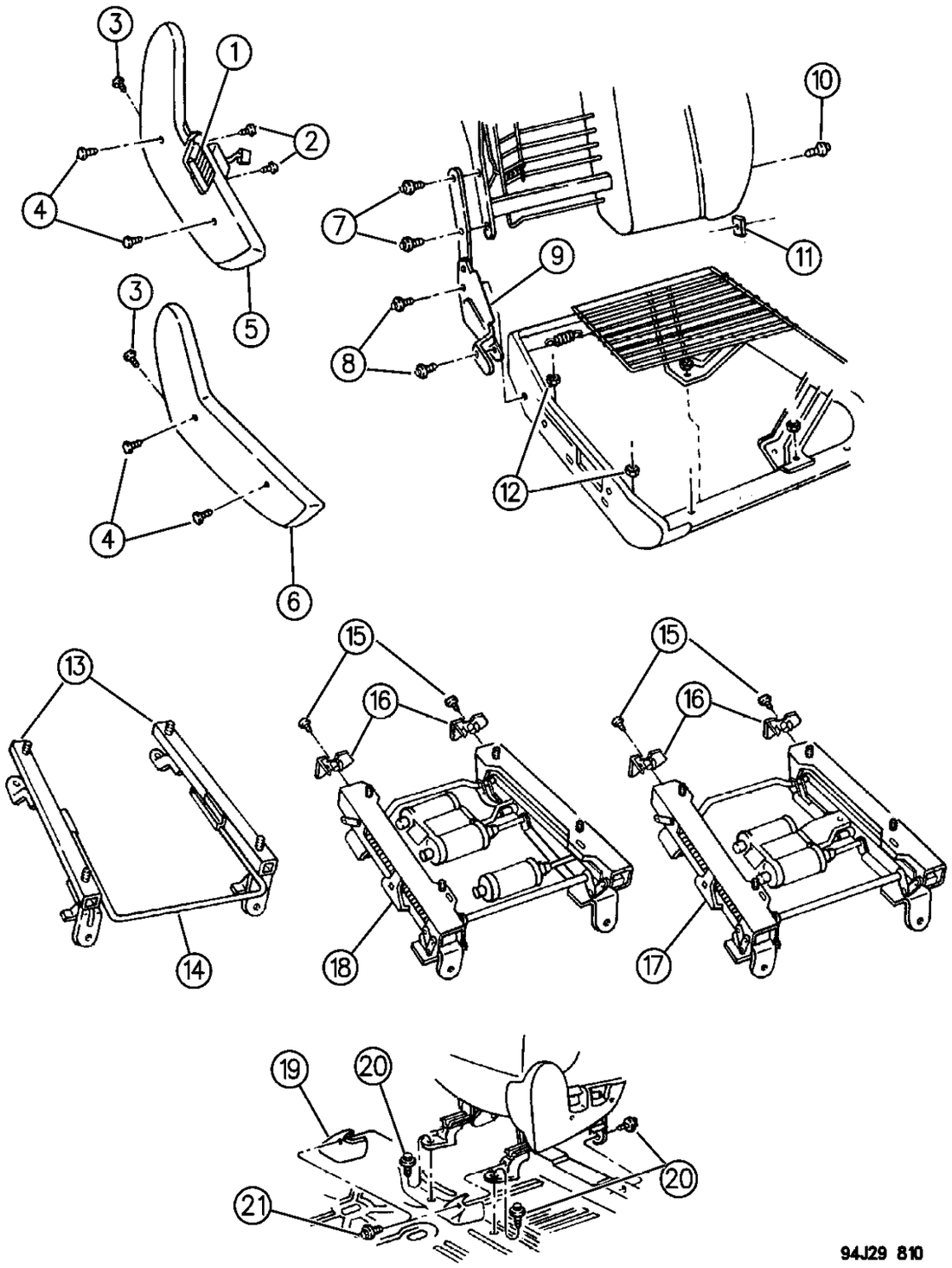

ITEM	PART NUMBER	QTY	BODY	MODEL	DESCRIPTION
1		AR			SWITCH ASSEMBLY, Seat ***
	4601 756-7				Power Seat/Recliner
	5600 8727				Power Lumbar
-		AR			KNOB
	4607 042-3				Power Seat
-	4607 045				Recliner
2		4			SCREW, Seat Switch Mounting, Not serviced, 10-16x.62
3	4720 769	2			SCREW, Side Shield Attaching
4	4720 770	4			SCREW, Side shield Attaching
5					SHIELD, Side, Power, (Switch Not Included, See Item #1)
	PQ18-9 SAZ	1			Agate
	PQ18-9 SC3	1			Mist Gray
	PQ18-9 ST6	1			Saddle
6					SHIELD, Side, Manual
	PJ62-3 SAZ	1			Agate
	PJ62-3 ST6	1			Saddle
7	4720 768	4			BOLT, Recliner to Seatback
8	4796 793	4			BOLT, Recliner to Cushion Frame
9					RECLINER ASSY., Front Seat Back ***
	4796 714-5	1			Manual
	4856 748-9	1			Power
	4864 861	1			Power w/Memory, Drivers Side, w/Motor
-	4607 044-5	1			KNOB, Power Recliner
10	4797 554	1			BOLT, Pivot
11	4713 982	2			U-NUT, Front Seat Back Frame
12	6101 467	8			NUT, Adjuster to Seat Cushion Frame
The seat frames and pads are only serviced as covered assemblies, see illustration 520. e Adhesive #312.					
13					ADJUSTER, Manual Seat Track
	4856 552	1			Passenger Seat, Outboard
	4856 551	1			Passenger Seat, Inboard
	4856 554	1			Driver Seat, Outboard
	4856 553	1			Driver Seat Inboard
14	4713 930	2			HANDLE, Front Seat Adjuster
15		AR			SCREW, Not Serviced, (8-18x.62)
16					SHIELD, Rear of Power Adjuster
	4723 888	1			Passenger Outboard
	4723 888	1			Driver Inboard
	4723 889	1			Passenger Inboard
	4723 889	1			Driver Outboard
17	4856 752-3	1			ADJUSTER, Power, Includes Motor
18					ADJUSTER, Power w/Memory, Includes Motor
	4856 754	1			R.H.D.

MODEL CODES:

72=2 DR Wagon
74=4 DR Wagon
77=Open Body 93" Whlbase
78=Open Body 103" Whlbase - Export
T=2WD
J,N=4WD
U=4WD (RHD)

BODY STYLES:

YJ=Wrangler (4X4) "S"
Weangler (4X4) SE
Wrangler (4X4) Sahara
Wrangler (4X4) Renegade
XJ=Cherokee SE
Cherokee Sport
Cherokee Country
ZJ=Grand Cherokee SE
Grand Cherokee Laredo
Grand Cherolee Limited
ZG=Grand Cherokee European
Y1=Wrangler
X1=Cherokee
Z1=Grand Cherokee
KDX=Vehicles

AR = Use as Required - = Non Illustrated Part P.A.R. = Paint as Required

RECLINER AND SEAT TRACK FRONT SEAT GRAND CHEROKEE, ZJ, 1996
Figure IZJ-820

IZJ–820

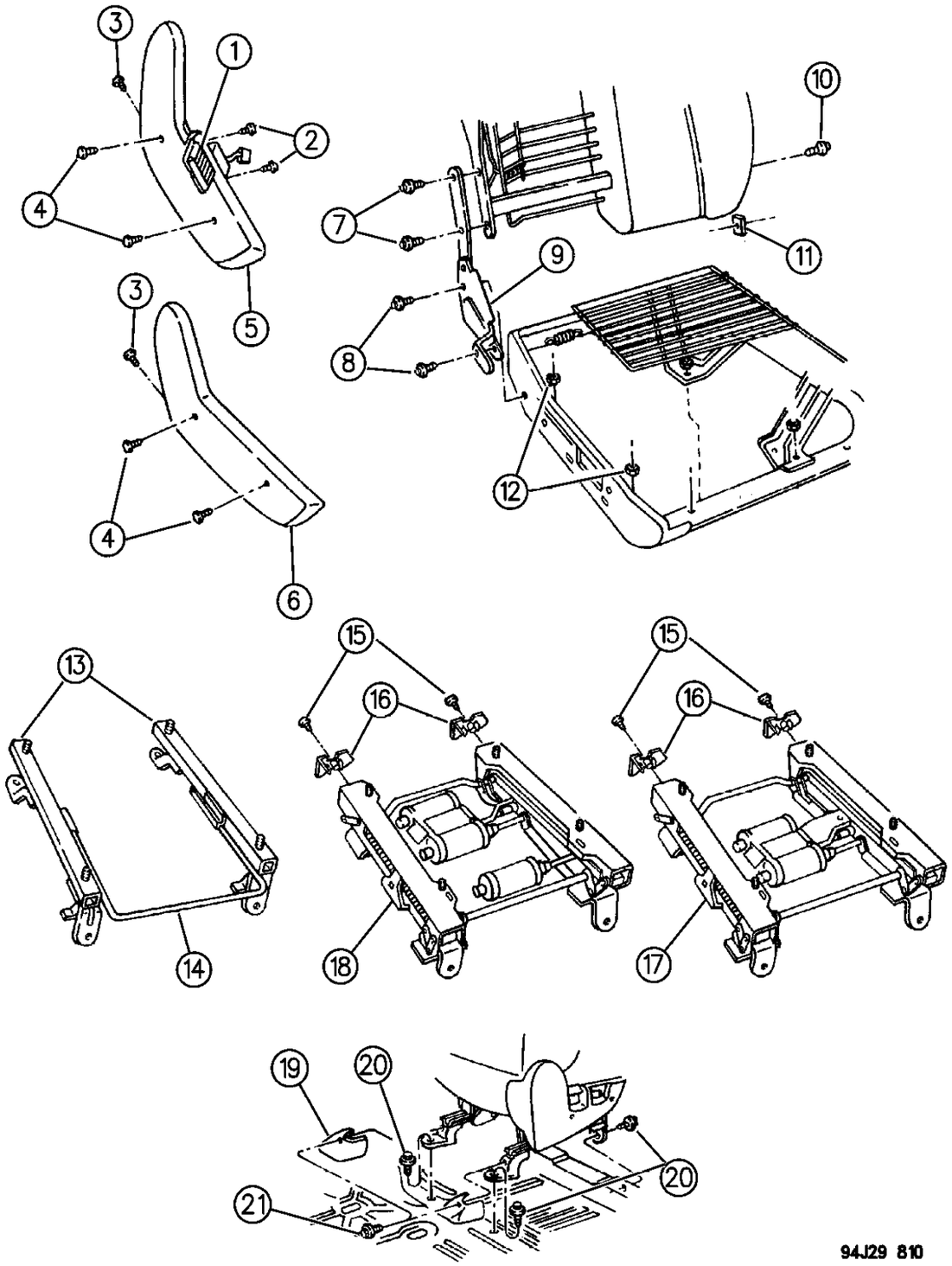

ITEM	PART NUMBER	QTY	BODY	MODEL	DESCRIPTION
	4856 755	1			L.H.D.
19					COVER, Power Seat Track
	5CC1 6SAZ	1			Agate
	5CC1 6SC3	1			Mist Gray
	5CC1 6ST6	1			Saddle
20	6501 093	8			SCREW, Seat Adjuster to Floor
21	0153 749	4			SCREW, Power Seat Track Cover Attach, .164-15x.750

MODEL CODES:

72=2 DR Wagon
74=4 DR Wagon
77=Open Body 93" Whlbase
78=Open Body 103" Whlbase - Export
T=2WD
J,N=4WD
U=4WD (RHD)

BODY STYLES:

YJ=Wrangler (4X4) "S"
Weangler (4X4) SE
Wrangler (4X4) Sahara
Wrangler (4X4) Renegade
XJ=Cherokee SE
Cherokee Sport
Cherokee Country
ZJ=Grand Cherokee SE
Grand Cherokee Laredo
Grand Cherolee Limited
ZG=Grand Cherokee European
Y1=Wrangler
X1=Cherokee
Z1=Grand Cherokee
KDX=Vehicles

AR = Use as Required - = Non Illustrated Part P.A.R. = Paint as Required

PANELS, LIFTGATE AND SCUFF PLATE - GRAND CHEROKEE AND GRAND WAGONEER - ZJ
Figure IZJ-1010

IZJ-1010D

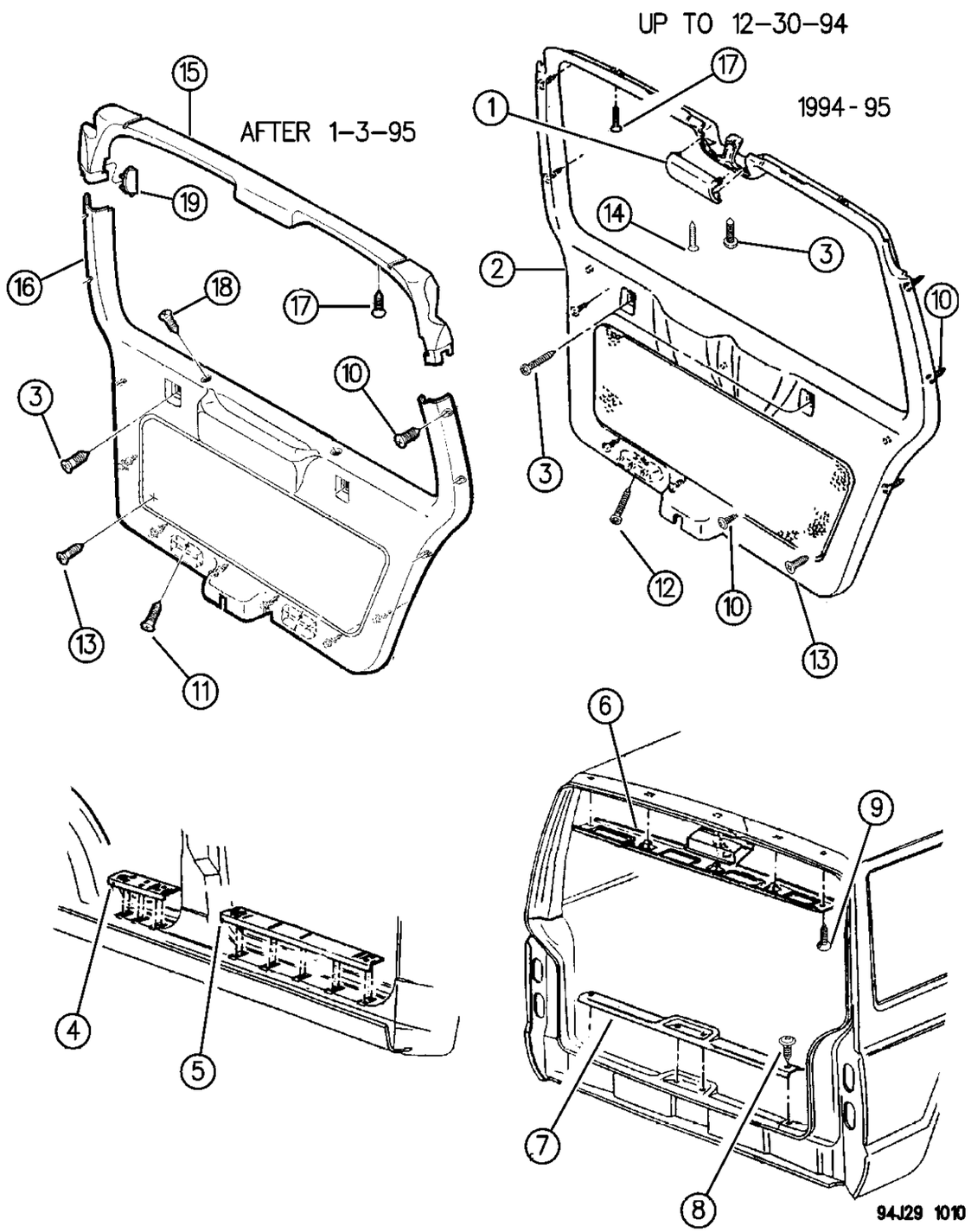

ITEM	PART NUMBER	QTY	BODY	MODEL	DESCRIPTION
1					COVER, Bulb Access
	5AW5 4LD5	1			Quartz
	5AW5 4LF8	1			Driftwood
	5AW5 4MV4	1			Champagne
2					PANEL ASSEMBLY, Liftgate Trim (includes fasteners, seal, grab pocket cup and carpeting) ***
					1994,95, Up to 12-30-94
	5DL1 4MD5	1			Quartz
	5DL1 4MF8	1			Driftwood
	5DL1 4MVV	1			Champagne
-	5521 4842	1			INSULATION, Liftgate Trim Panel Upper
3	J400 3671	3			SCREW, Trim Panel Attaching, .164-18x1.625
4	5503 0746-7	1			PLATE, Scuff, Rear Door Sill
5	5503 0744-5	1			PLATE, Scuff, Front Door Sill
6	5DS2 9MF4	1			PANEL ASSEMBLY, Liftgate Opening Upper (includes lamp assembly w/bulb, louvers and clips), P.A.R. ***
-					LOUVER, Lift Gate Opening Moulding, P.A.R. ***
	5CU0 0LF4	4			1994,95
	5CU0 0SAZ	4			1996
-	J400 3086	1			BULB, Liftgate Opening Moulding Lamp
7					PANEL, Lift Gate Opening, Lower
					1994,95
	5DG7 1LD5	1			Quartz
	5DG7 1LF8	1			Driftwood
	5DG7 1MV4	1			Champagne
					1996
	5DG7 1SAZ	1			Agate
	5DG7 1SC3	1			Mist Gray
	5DG7 1ST6	1			Saddle
8		4			SCREW, (154133, not serviced, use .164-18x.625)
9		2			SCREW, 30mm Long (34202473 not serviced)
10	6502 991	10			FASTENER, Push In (Also Included In The Liftgate Trim Panel Assembly)
11		2			PLUG, Liftgate Glass, (Fixed Glass Only)
12		5			SCREW, .164-15x.750, Not Serviced
13		2			SCREW, .190-16.500, Not Serviced
14		1			SCREW, .190-16x.500, Not Serviced
15					PANEL, Liftgate Trim Upper
					w/Flipper
					1996
	5EL4 1SAZ	1			Agate
	5EL4 1SC3	1			Mist Gray

MODEL CODES:

72=2 DR Wagon
74=4 DR Wagon
77=Open Body 93" Whlbase
78=Open Body 103" Whlbase - Export
T=2WD
J,N=4WD
U=4WD (RHD)

BODY STYLES:

YJ=Wrangler (4X4) "S"
Weangler (4X4) SE
Wrangler (4X4) Sahara
Wrangler (4X4) Renegade
XJ=Cherokee SE
Cherokee Sport
Cherokee Country
ZJ=Grand Cherokee SE
Grand Cherokee Laredo
Grand Cherolee Limited
ZG=Grand Cherokee European
Y1=Wrangler
X1=Cherokee
Z1=Grand Cherokee
KDX=Vehicles

AR = Use as Required - = Non Illustrated Part P.A.R. = Paint as Required

PANELS, LIFTGATE AND SCUFF PLATE - GRAND CHEROKEE AND GRAND WAGONEER - ZJ
Figure IZJ-1010

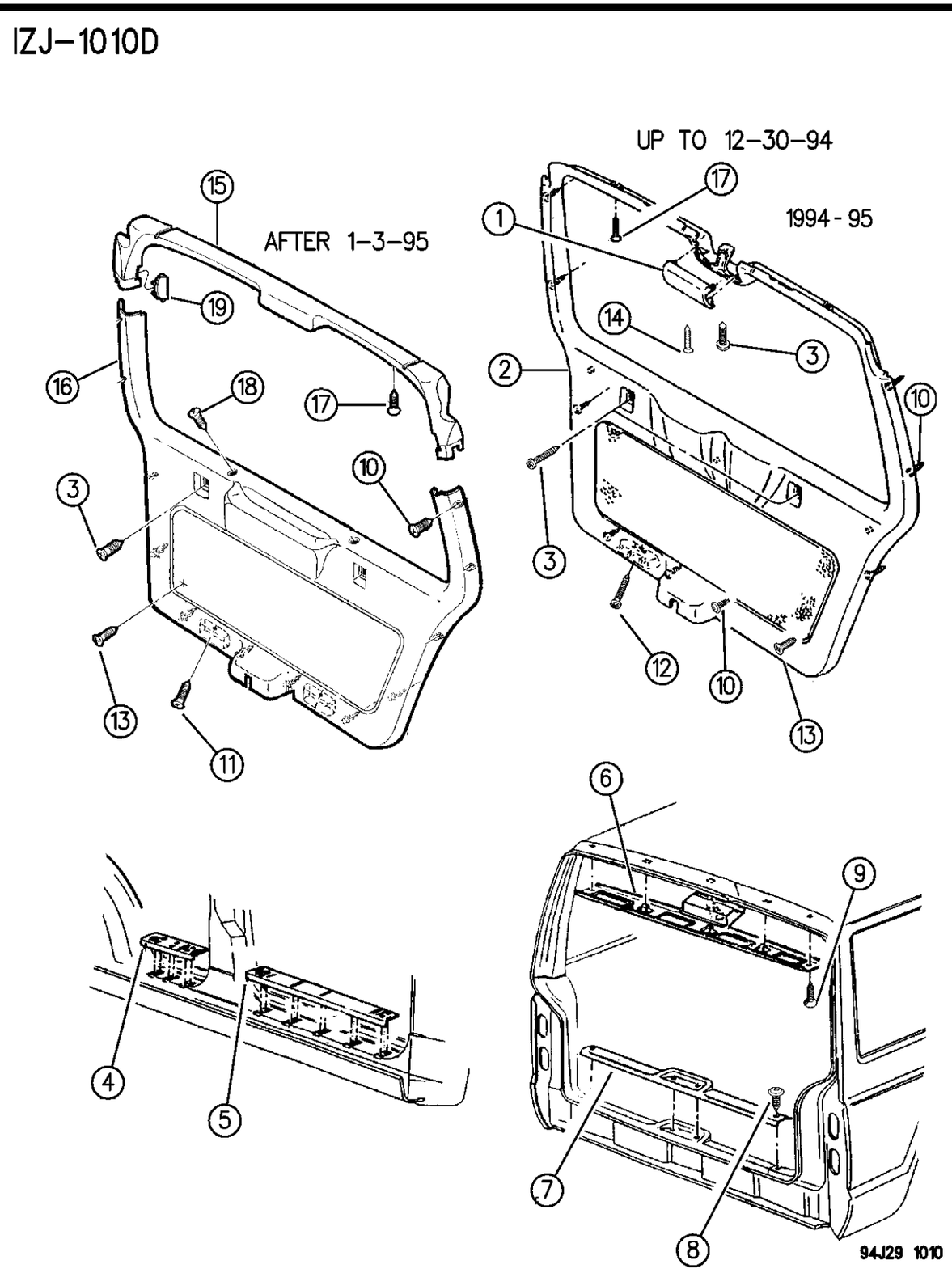

ITEM	PART NUMBER	QTY	BODY	MODEL	DESCRIPTION
	5EL4 1ST6	1			Saddle
					w/o Flipper
					1995, After 1-3-95
	5EL4 7RD5	1			Quartz
	5EL4 7RF8	1			Driftwood
	5EL4 7RV4	1			Champagne
					1996
	5FC0 3SAZ	1			Agate
	5FC0 3SC3	1			Mist Gray
	5FC0 3ST6	1			Saddle
16					PANEL Assy., Liftgate Trim Lower, w/Sound Insulation ***
					1995, After 1-3-95
	5EL3 2RD5	1			Quartz
	5EL3 2RF8	1			Driftwood
	5EL3 2RV4	1			Champagne
					1996
	5EZ5 0SAZ	1			Agate
	5EZ5 0SC3	1			Mist Gray
	5EZ5 0ST6	1			Saddle
	3420 2599	2			CLIP, Panel Push-in, (Included in Panel)
	5521 4842	1			Insulation ***
17		4			SCREW, .164-18x1.625, Not Serviced
18		2			SCREW, .164-18x"L", Not Serviced
19		1			PLUG, Liftgate Glass, (Fixed Glass Only)
	5DG4 6PD5	1			Quartz
	5DG4 6PF8	1			Driftwood
	5DG4 6PVV	1			Champagne
-	5521 6485	1			INSULATION, Liftgate Water Shield

MODEL CODES:

72=2 DR Wagon
74=4 DR Wagon
77=Open Body 93" Whlbase
78=Open Body 103" Whlbase - Export
T=2WD
J,N=4WD
U=4WD (RHD)

BODY STYLES:

YJ=Wrangler (4X4) "S"
Weangler (4X4) SE
Wrangler (4X4) Sahara
Wrangler (4X4) Renegade
XJ=Cherokee SE
Cherokee Sport
Cherokee Country
ZJ=Grand Cherokee SE
Grand Cherokee Laredo
Grand Cherolee Limited
ZG=Grand Cherokee European
Y1=Wrangler
X1=Cherokee
Z1=Grand Cherokee
KDX=Vehicles

AR = Use as Required - = Non Illustrated Part P.A.R. = Paint as Required

« RETURN TO GROUP INDEX

SAGIPARTS - ORDER ALL PARTS YOU NEED FROM OUR CATALOGS!!

*** INDICATES A REQUIRED FIELDS**

*Year: *Model: *Engine:

*Transmission type: *4x4:

(1) Insert part number: select

(2) Insert part number: select

(3) Insert part number: select

(4) Insert part number: select

(5) Insert part number: select

(6) Insert part number: select

*Full name:

Telephone:

*E-mail:

City:

*Country shipping: *Choose Shipping:

Specify that part you need, questions or comments:

Send Request Cancel

Order any part you need by:

Sagiparts, Copyright 1999 All Right Reserved